JVC

SERVICE MANUAL

DV CAMCORDER

GY-DV550U/GY-DV550E

The photo shows the GY-DV550 DV camcorder with an optional lens, viewfinder, microphone and mic holder.

Mini DV

PROFESSIONAL DV

NOTE:

This service manual only describes the matters that are different from the GY-DV500.
On servicing, refer to the service manual (No. 60125) of GY-DV500 together with this.
The "SECTION 8 TECHNICAL INFORMATION" on page 8-1 shows differences between GY-DV550 and GY-DV500.

No. 60135
January 2001

recycled paper

COPYRIGHT © 2001 VICTOR COMPANY OF JAPAN, LTD.

TABLE OF CONTENTS

Section	Title	Page
	Important Safety Precautions	
	INSTRUCTIONS	
	SECTION 1 SERVICE CAUTIONS AND DISASSEMBLY	
1.1	RESETTING THE POWER CIRCUIT PROTECTION BREAKER	1-1
1.2	REMOVING THE EXTERIOR COVERS	1-1
1.3	LAYOUTS OF THE MAJOR BOARDS	1-3
1.4	REMOVING THE OPTICAL BLOCK ASSEMBLY AND THE OPTICAL FILTER ASSEMBLY	1-5
1.5	REMOVING MAJOR BOARDS FROM THE CAMERA	1-6
1.6	REMOVING THE MAJOR BOARDS FROM THE VCR	1-8
1.7	REMOVING THE MAJOR BOARDS FROM THE AD FRAME	1-10
1.8	DISASSEMBLY OF THE DVC UNIT	1-12
1.9	TAPE EJECTION IN CASE OF EMERGENCY	1-14
1.10	CAUTION FOR REPLACING THE DV MAIN BOARD AND SS/CP BOARD	1-16
1.11	FUNCTIONS OF INTERNAL SWITCHES	1-17
1.12	MODES REQUIRED IN SERVICING (CAMERA)	1-18
1.13	CHANGING THE COLOR MATRIX SETTING	1-21
1.14	SERVICE MENU (VCR)	1-23
1.15	ALARM DETECTION METHODS	1-27
1.16	BATTERY POWER DETECTION METHODS	1-28
1.17	EEPROMs in VCR	1-28
1.18	BACKUP OF TIME DATA	1-28
1.19	WARNING CODES	1-29
1.20	ANALYSIS OF BLOCK NOISE (SYMPTOMS: POOR VIDEO, ABSCNCE OF AUDIO)	1-31
	SECTION 2 MECHANISM ADJUSTMENTS	
	These MECHANISM ADJUSTMENTS are same as GY-DV500. On servicing, refer to the service manual (No. 60125) of GY-DV500 section 2 for these adjustments.	
	SECTION 3 ELECTRICAL ADJUSTMENTS	
3.1	FLOWCHART OF ELECTRICAL ADJUSTMENTS	3-1
3.2	FUNCTIONS REQUIRED FOR ADJUSTMENTS, SETUP	3-2
3.3	STANDARD SETUP	3-3
3.4	ADJUSTMENT MENU	3-3
3.5	CAMERA ADJUSTMENTS	3-5
3.6	VCR ADJUSTMENTS	3-11
3.7	DV ADJUSTMENTS ..... Refer to the service manual (No. 60125) of GY-DV500.	
	SECTION 4 CHARTS AND DIAGRAMS	
	For the diagram that are not described in this section (refer to page 4-2), refer to the service manual (No. 60125) of GY-DV500.	
4.1	INDEX TO PAGES OF MAIN BOARDS AND CIRCUIT BOARD LOCATION	4-2
4.2	OVERALL WIRING DIAGRAM	4-3
4.3	ISB/ISG/ISR SCHEMATIC DIAGRAM [1][1]/[1][2]/[1][3]	4-4
4.4	ISB/ISG/ISR CIRCUIT BOARD	4-5
4.5	TG SCHEMATIC DIAGRAM [1][4]	4-6
4.6	TG CIRCUIT BOARD	4-7
4.7	CAM SCHEMATIC DIAGRAM [1][5]	4-8
4.8	CAM CIRCUIT BOARD	4-9
4.9	DPR SCHEMATIC DIAGRAM (1/4) [1][9]	4-10
	• DPR SCHEMATIC DIAGRAM (2/4) [1][9]	4-11
	• DPR SCHEMATIC DIAGRAM (3/4) [1][9]	4-12
	• DPR SCHEMATIC DIAGRAM (4/4) [1][9]	4-13
4.10	DPR CIRCUIT BOARD	4-14
4.11	SE SCHEMATIC DIAGRAM (1/2) [1][6]	4-16
	• SE SCHEMATIC DIAGRAM (2/2) [1][6]	4-17
4.12	SE CIRCUIT BOARD	4-18
4.13	SS/CP SCHEMATIC DIAGRAM (1/2) [3][1]	4-19
	• SS/CP SCHEMATIC DIAGRAM (2/2) [3][1]	4-20
4.14	SS/CP CIRCUIT BOARD	4-21
4.15	MT SCHEMATIC DIAGRAM [3][4]	4-22
4.16	MT CIRCUIT BOARD	4-23
4.17	AUDIO/LCD SCHEMATIC DIAGRAM (1/2) [3][2]	4-25
	• AUDIO/LCD SCHEMATIC DIAGRAM (2/2) [3][2]	4-26
4.18	AUDIO/LCD CIRCUIT BOARD	4-27
4.19	PS SCHEMATIC DIAGRAM [1][7]	4-31
4.20	IF, IF2 SCHEMATIC DIAGRAM [2][1]/[1][8]	4-32
4.21	PS, IF, IF2 CIRCUIT BOARD	4-33
4.22	REG SCHEMATIC DIAGRAM [3][3]	4-34
4.23	REG CIRCUIT BOARD	4-35
4.24	AU JUNK SCHEMATIC DIAGRAM [3][9]	4-36
4.25	PWR JUNC, OPE SCHEMATIC DIAGRAM [4][1]/[3][5]	4-37
4.26	CONNECT, REMOTE, XLR, EAR.J, SEN1, SENS2 SCHEMATIC DIAGRAM [4][2]/[3][8]/[4][0]/[4][3]/[3][6]/[3][7]	4-38
4.27	AU JUNK, PWR JUNC, OPE, CONNECT, REMOTE, XLR, EAR.J, SEN1, SENS2 CIRCUIT BOARD	4-39
4.28	AD, CT, P.SEL, 26P, TA3, TA4, BNC, CN SCHEMATIC DIAGRAM [5][7]/[5][0]/[5][1]/[5][2]/[5][3]/[5][4]/[5][5]/[5][6]	4-40
4.29	AD, CT, 26P, TA3, TA4, BNC, CN CIRCUIT BOARD	4-41
4.30	ROM SCHEMATIC DIAGRAM AND CIRCUIT BOARD	4-42
4.31	IS, TG BLOCK DIAGRAM (G channel)	4-43
4.32	CAM BLOCK DIAGRAM	4-44
4.33	DPR BLOCK DIAGRAM	4-45
4.34	SE BLOCK DIAGRAM	4-46
4.35	SS/CP BLOCK DIAGRAM	4-47
4.36	AUDIO/LCD BLOCK DIAGRAM (1/2)	4-48
	• AUDIO/LCD BLOCK DIAGRAM (2/2)	4-49
4.37	IC BLOCK DIAGRAMS	4-50
	SECTION 5 EXPLODED VIEW AND PARTS LIST	
5.1	CAMERA HEAD ASSEMBLY [M][1]	5-3
5.2	CABINET ASSEMBLY [M][2]	5-4
5.3	RIGHT SIDE COVER ASSEMBLY [M][3]	5-7
5.4	CHASSIS ASSEMBLY [M][4]	5-8
5.5	DVC UNIT ASSEMBLY [M][5]	5-11
5.6	MECHANISM ASSEMBLY [M][6]	5-12

SECTION 6 ELECTRICAL PARTS LIST

6.1 PR & MDA BOARD ASSEMBLY PARTS LIST [0][1] 6-2
6.2 DCDC BOARD ASSEMBLY PARTS LIST [0][2] 6-3
6.3 ROM BOARD ASSEMBLY PARTS LIST [0][3] 6-4
6.4 CONN. BOARD ASSEMBLY PARTS LIST [0][4] 6-4
6.5 DV MAIN BOARD ASSEMBLY PARTS LIST [1][0] 6-5
6.6 ISB BOARD ASSEMBLY PARTS LIST [1][1] 6-11
6.7 ISG BOARD ASSEMBLY PARTS LIST [1][2] 6-11
6.8 ISR BOARD ASSEMBLY PARTS LIST [1][3] 6-12
6.9 TG BOARD ASSEMBLY PARTS LIST [1][4] 6-12
6.10 CAM BOARD ASSEMBLY PARTS LIST [1][5] 6-14
6.11 SE BOARD ASSEMBLY PARTS LIST [1][6] 6-16
6.12 PS BOARD ASSEMBLY PARTS LIST [1][7] 6-21
6.13 IF2 BOARD ASSEMBLY PARTS LIST [1][8] 6-23
6.14 DPR BOARD ASSEMBLY PARTS LIST [1][9] 6-23
6.15 JOG BOARD ASSEMBLY PARTS LIST [2][0] 6-26
6.16 IF BOARD ASSEMBLY PARTS LIST [2][1] 6-27
6.17 SWRU BOARD ASSEMBLY PARTS LIST [2][2] 6-27
6.18 SWF BOARD ASSEMBLY PARTS LIST [2][3] 6-28
6.19 SWRM BOARD ASSEMBLY PARTS LIST [2][4] 6-28
6.20 SWRB BOARD ASSEMBLY PARTS LIST [2][5] 6-28
6.21 SWPW BOARD ASSEMBLY PARTS LIST [2][6] 6-29
6.22 MIC BOARD ASSEMBLY PARTS LIST [2][7] 6-29
6.23 BNC BOARD ASSEMBLY PARTS LIST (MAIN UNIT) [2][8] 6-29
6.24 SS/CP BOARD ASSEMBLY PARTS LIST [3][1] 6-29
6.25 AUDIO/LCD BOARD ASSEMBLY PARTS LIST [3][2] 6-32
6.26 REG BOARD ASSEMBLY PARTS LIST [3][3] 6-36
6.27 MT BOARD ASSEMBLY PARTS LIST [3][4] 6-38
6.28 OPE BOARD ASSEMBLY PARTS LIST [3][5] 6-38
6.29 SEN1 BOARD ASSEMBLY PARTS LIST [3][6] 6-39
6.30 SENS2 BOARD ASSEMBLY PARTS LIST [3][7] 6-39
6.31 REMOTE BOARD ASSEMBLY PARTS LIST [3][8] 6-39
6.32 AU JUNK BOARD ASSEMBLY PARTS LIST [3][9] 6-39
6.33 XLR BOARD ASSEMBLY PARTS LIST [4][0] 6-40
6.34 PWR JUNC BOARD ASSEMBLY PARTS LIST [4][1] 6-40
6.35 CONNECT BOARD ASSEMBLY PARTS LIST [4][2] 6-41
6.36 EAR.J BOARD ASSEMBLY PARTS LIST [4][3] 6-41
6.37 CT BOARD ASSEMBLY PARTS LIST [5][0] 6-41
6.38 P.SEL BOARD ASSEMBLY PARTS LIST [5][1] 6-42
6.39 26P BOARD ASSEMBLY PARTS LIST [5][2] 6-42
6.40 TA3 BOARD ASSEMBLY PARTS LIST [5][3] 6-42
6.41 TA4 BOARD ASSEMBLY PARTS LIST [5][4] 6-42
6.42 BNC BOARD ASSEMBLY PARTS LIST (ADAPTER) [5][5] 6-42
6.43 CN BOARD ASSEMBLY PARTS LIST [5][6] 6-42
6.44 AD BOARD ASSEMBLY PARTS LIST [5][7] 6-43

SECTION 7 PACKING

7.1 PACKING ASSEMBLY [M][7] 7-1
7.2 FACTORY SETTING OF SWITCH AND VR 7-2

SECTION 8 TECHNICAL INFORMATION

8.1 COMPARISON BETWEEN GY-DV550 AND GY-DV500 8-1
8.2 COMPARISON LIST OF THE BOARD BETWEEN GY-DV550 AND GY-DV500 8-2

Important Safety Precautions

Prior to shipment from the factory, JVC products are strictly inspected to conform with the recognized product safety and electrical codes of the countries in which they are to be sold. However, in order to maintain such compliance, it is equally important to implement the following precautions when a set is being serviced.

●Precautions during Servicing

1. Locations requiring special caution are denoted by labels and inscriptions on the cabinet, chassis and certain parts of the product. When performing service, be sure to read and comply with these and other cautionary notices appearing in the operation and service manuals.

2. Parts identified by the ⚠ symbol and shaded ( ) parts are critical for safety.
   Replace only with specified part numbers.
   Note: Parts in this category also include those specified to comply with X-ray emission standards for products using cathode ray tubes and those specified for compliance with various regulations regarding spurious radiation emission.

3. Fuse replacement caution notice.
   Caution for continued protection against fire hazard.
   Replace only with same type and rated fuse(s) as specified.

4. Use specified internal wiring. Note especially:
   1) Wires covered with PVC tubing
   2) Double insulated wires
   3) High voltage leads

5. Use specified insulating materials for hazardous live parts. Note especially:
   1) Insulation Tape
   2) PVC tubing
   3) Spacers
   4) Insulation sheets for transistors
   5) Barrier

6. When replacing AC primary side components (transformers, power cords, noise blocking capacitors, etc.) wrap ends of wires securely about the terminals before soldering.

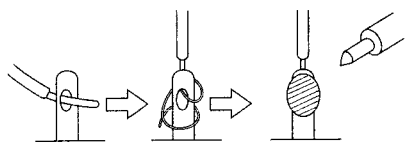

Fig.1

7. Observe that wires do not contact heat producing parts (heatsinks, oxide metal film resistors, fusible resistors, etc.)

8. Check that replaced wires do not contact sharp edged or pointed parts.

9. When a power cord has been replaced, check that 10-15 kg of force in any direction will not loosen it.

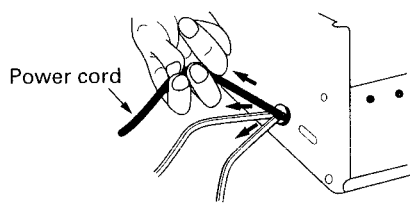

Fig.2

10. Also check areas surrounding repaired locations.

11. Products using cathode ray tubes (CRTs)
    In regard to such products, the cathode ray tubes themselves, the high voltage circuits, and related circuits are specified for compliance with recognized codes pertaining to X-ray emission. Consequently, when servicing these products, replace the cathode ray tubes and other parts with only the specified parts. Under no circumstances attempt to modify these circuits. Unauthorized modification can increase the high voltage value and cause X-ray emission from the cathode ray tube.

12. Crimp type wire connector
    In such cases as when replacing the power transformer in sets where the connections between the power cord and power transformer primary lead wires are performed using crimp type connectors, if replacing the connectors is unavoidable, in order to prevent safety hazards, perform carefully and precisely according to the following steps.

    1) **Connector part number** : E03830-001
    2) **Required tool** : Connector crimping tool of the proper type which will not damage insulated parts.
    3) **Replacement procedure**
       (1) Remove the old connector by cutting the wires at a point close to the connector.
       Important : Do not reuse a connector (discard it).

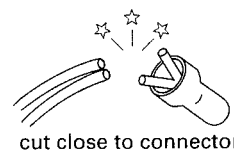

Fig.3

(2) Strip about 15 mm of the insulation from the ends of the wires. If the wires are stranded, twist the strands to avoid frayed conductors.

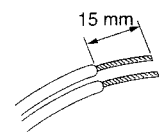

Fig.4

(3) Align the lengths of the wires to be connected. Insert the wires fully into the connector.

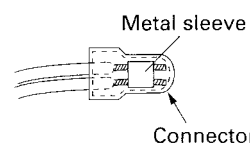

Fig.5

(4) As shown in Fig.6, use the crimping tool to crimp the metal sleeve at the center position. Be sure to crimp fully to the complete closure of the tool.

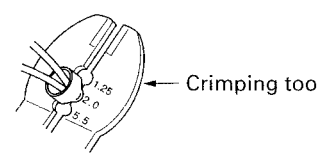

Fig.6

(5) Check the four points noted in Fig.7.

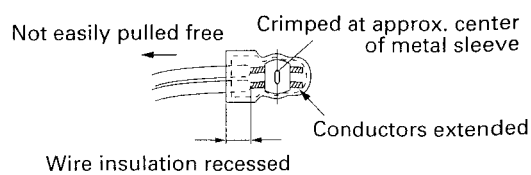

Fig.7

● Safety Check after Servicing

Examine the area surrounding the repaired location for damage or deterioration. Observe that screws, parts and wires have been returned to original positions, Afterwards, perform the following tests and confirm the specified values in order to verify compliance with safety standards.

1. **Insulation resistance test**
Confirm the specified insulation resistance or greater between power cord plug prongs and externally exposed parts of the set (RF terminals, antenna terminals, video and audio input and output terminals, microphone jacks, earphone jacks, etc.). See table 1 below.

2. **Dielectric strength test**
Confirm specified dielectric strength or greater between power cord plug prongs and exposed accessible parts of the set (RF terminals, antenna terminals, video and audio input and output terminals, microphone jacks, earphone jacks, etc.). See table 1 below.

3. **Clearance distance**
When replacing primary circuit components, confirm specified clearance distance (d), (d') between soldered terminals, and between terminals and surrounding metallic parts. See table 1 below.

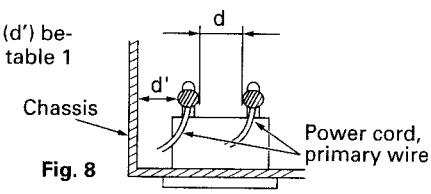

Fig. 8

4. **Leakage current test**
Confirm specified or lower leakage current between earth ground/power cord plug prongs and externally exposed accessible parts (RF terminals, antenna terminals, video and audio input and output terminals, microphone jacks, earphone jacks, etc.).
Measuring Method : (Power ON)
Insert load Z between earth ground/power cord plug prongs and externally exposed accessible parts. Use an AC voltmeter to measure across both terminals of load Z. See figure 9 and following table 2.

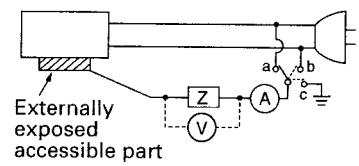

Fig. 9

5. **Grounding (Class I model only)**
Confirm specified or lower grounding impedance between earth pin in AC inlet and externally exposed accessible parts (Video in, Video out, Audio in, Audio out or Fixing screw etc.).
Measuring Method:
Connect milli ohm meter between earth pin in AC inlet and exposed accessible parts. See figure 10 and grounding specifications.

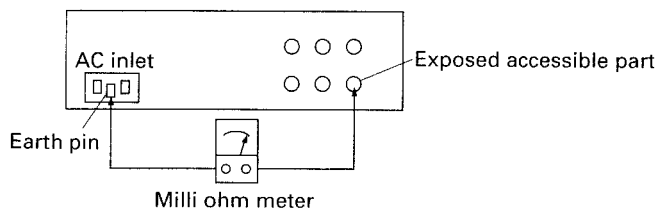

Fig. 10

Grounding Specifications

Region	Grounding Impedance (Z)
USA & Canada	Z ≦ 0.1 ohm
Europe & Australia	Z ≦ 0.5 ohm

AC Line Voltage	Region	Insulation Resistance (R)	Dielectric Strength	Clearance Distance (d), (d')
100 V	Japan	R ≧ 1 MΩ/500 V DC	AC 1 kV 1 minute	d, d' ≧ 3 mm
100 to 240 V			AC 1.5 kV 1 miute	d, d' ≧ 4 mm
110 to 130 V	USA & Canada	–	AC 900 V 1 minute	d, d' ≧ 3.2 mm
110 to 130 V 200 to 240 V	Europe & Australia	R ≧ 10 MΩ/500 V DC	AC 3 kV 1 minute (Class Ⅱ) AC 1.5 kV 1 minute (Class Ⅰ)	d ≧ 4 mm d' ≧ 8 mm (Power cord) d' ≧ 6 mm (Primary wire)

Table 1 Specifications for each region

AC Line Voltage	Region	Load Z	Leakage Current (i)	a, b, c
100 V	Japan	1 kΩ	i ≦ 1 mA rms	Exposed accessible parts
110 to 130 V	USA & Canada	0.15 μF, 1.5 kΩ	i ≦ 0.5 mA rms	Exposed accessible parts
110 to 130 V 220 to 240 V	Europe & Australia	2 kΩ	i ≦ 0.7 mA peak i ≦ 2 mA dc	Antenna earth terminals
		50 kΩ	i ≦ 0.7 mA peak i ≦ 2 mA dc	Other terminals

Table 2 Leakage current specifications for each region

Note: These tables are unofficial and for reference only. Be sure to confirm the precise values for your particular country and locality.

JVC®

U

INTRODUCTION
CONTROLS, INDICATORS AND CONNECTORS
BASIC SYSTEM CONNECTIONS AND ADJUSTMENTS
POWER SUPPLY
PREPARATIONS
SETTING AND ADJUSTMENTS BEFORE SHOOTING
SHOOTING OPERATION
PLAYBACK MODE
TIME CODE OPERATION
S.S.F. (Super Scene Finder) FUNCTION
USING EXTERNAL COMPONENTS
SETUP MENU
FEATURES OF THE CAMERA SECTION
OTHERS

DV CAMCORDER

GY-DV550

Mini DV

INSTRUCTIONS

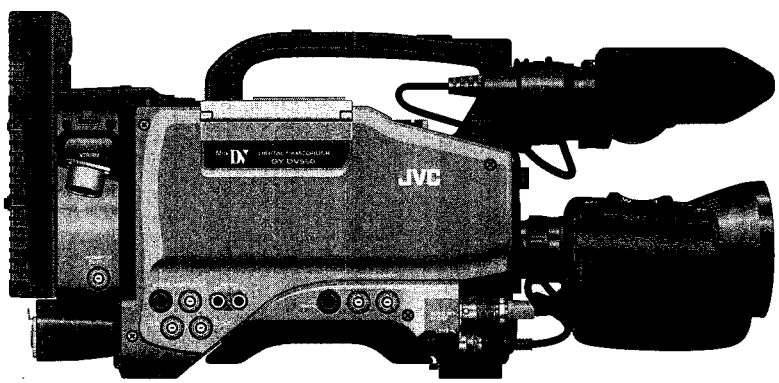

* The illustration shows the GY-DV550 DV Camcorder with the optional lens viewfinder attached.

Thank you for purchasing this JVC product. Before operating this unit, please read the instructions carefully to ensure the best possible performance.

For Customer Use :
Enter below the Serial No. which is located on the body. Retain this information for future reference.

Model No. GY-DV550

Serial No.

This instruction manual is made from 100% recycled paper.

SC96999 (U MODEL)

E

JVC®

INTRODUCTION
CONTROLS, INDICATORS AND CONNECTORS
BASIC SYSTEM CONNECTIONS AND ADJUSTMENTS
POWER SUPPLY
PREPARATIONS
SETTING AND ADJUSTMENTS BEFORE SHOOTING
SHOOTING OPERATION
PLAYBACK MODE
TIME CODE OPERATION
S.S.F. (Super Scene Finder) FUNCTION
USING EXTERNAL COMPONENTS
SETUP MENU
FEATURES OF THE CAMERA SECTION
OTHERS

DV CAMCORDER
DV CAMKORDER
CAMESCOPE DV

GY-DV550

Mini DV

INSTRUCTIONS
BEDIENUNGSANLEITUNG
MANUEL D'INSTRUCTIONS

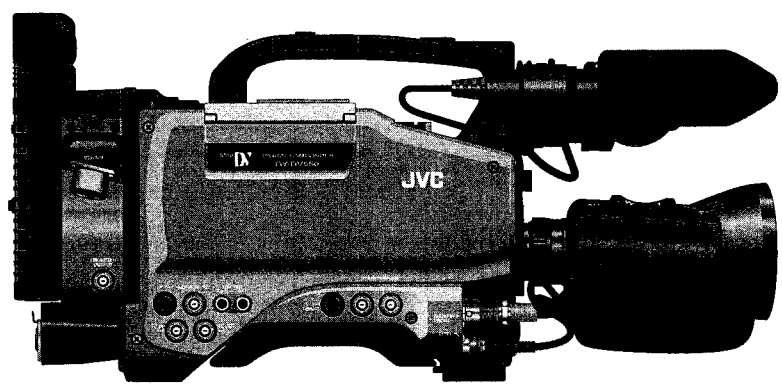

* The illustration shows the GY-DV550 DV Camcorder with the optional lens viewfinder attached.

Thank you for purchasing this JVC product. Before operating this unit, please read the instructions carefully to ensure the best possible performance.

This instruction manual is made from 100% recycled paper.

SC961000 (E MODEL)

IMPORTANT SAFEGUARDS

1. Read all of these instructions.
2. Save these instructions for later use.
3. All warnings on the product and in the operating instructions should be adhered to.
4. Unplug this appliance system from the wall outlet before cleaning. Do not use liquid cleaners or aerosol cleaners. Use a damp cloth for cleaning.
5. Do not use attachments not recommended by the appliance manufacturer as they may cause hazards.
6. Do not use this appliance near water – for example, near a bathtub, washbowl, kitchen sink, or laundry tub, in a wet basement, or near a swimming pool, etc.
7. Do not place this appliance on an unstable cart, stand, or table. The appliance may fall, causing serious injury to a child or adult, and serious damage to the appliance.
   Use only with a cart or stand recommended by the manufacturer, or sold with the appliance. Wall or shelf mounting should follow the manufacturer's instructions, and should use a mounting kit approved by the manufacturer.
   An appliance and cart combination should be moved with care. Quick stops, excessive force, and uneven surfaces may cause the appliance and cart combination to overturn.

   PORTABLE CART WARNING
   (symbol provided by RETAC)

   S3126A
8. Slots and openings in the cabinet and the back or bottom are provided for ventilation, and to insure reliable operation of the appliance and to protect it from overheating, these openings must not be blocked or covered. The openings should never be blocked by placing the appliance on a bed, sofa, rug, or other similar surface. This appliance should never be placed near or over a radiator or heat register. This appliance should not be placed in a built-in installation such as a bookcase unless proper ventilation is provided.
9. This appliance should be operated only from the type of power source indicated on the marking label. If you are not sure of the type of power supplied to your home, consult your dealer or local power company. For appliance designed to operate from battery power, refer to the operating instructions.
10. This appliance system is equipped with a 3-wire grounding type plug (a plug having a third (grounding) pin). This plug will only fit into a grounding-type power outlet. This is a safety feature. If you are unable to insert the plug into the outlet, contact your electrician to replace your obsolete outlet. Do not defeat the safety purpose of the grounding plug.
11. For added protection for this product during a lightning storm, or when it is left unattended and unused for long periods of time, unplug it from the wall outlet and disconnect the antenna or cable system. This will prevent damage to the product due to lightning and power-line surges.
12. Do not allow anything to rest on the power cord. Do not locate this appliance where the cord will be abused by persons walking on it.
13. Follow all warnings and instructions marked on the appliance.
14. Do not overload wall outlets and extension cords as this can result in fire or electric shock.
15. Never push objects of any kind into this appliance through cabinet slots as they may touch dangerous voltage points or short out parts that could result in a fire or electric shock. Never spill liquid of any kind on the appliance.
16. Do not attempt to service this appliance yourself as opening or removing covers may expose you to dangerous voltage or other hazards. Refer all servicing to qualified service personnel.
17. Unplug this appliance from the wall outlet and refer servicing to qualified service personnel under the following conditions:
    a. When the power cord or plug is damaged or frayed.
    b. If liquid has been spilled into the appliance.
    c. If the appliance has been exposed to rain or water.
    d. If the appliance does not operate normally by following the operating instructions. Adjust only those controls that are covered by the operating instructions as improper adjustment of other controls may result in damage and will often require extensive work by a qualified technician to restore the appliance to normal operation.
    e. If the appliance has been dropped or the cabinet has been damaged.
    f. When the appliance exhibits a distinct change in performance – this indicates a need for service.
18. When replacement parts are required, be sure the service technician has used replacement parts specified by the manufacturer that have the same characteristics as the original part. Unauthorized substitutions may result in fire, electric shock, or other hazards.
19. Upon completion of any service or repairs to this appliance, ask the service technician to perform routine safety checks to determine that the appliance is in safe operating condition.

Thank you for purchasing the JVC GY-DV550 DV Camcorder.

These instructions are for the GY-DV550E.
The instructions are given in three languages: English from page E-2 to E-104, German from page G-2 to G-104, French frompage F-2 to F-104.

This equipment is in conformity with the provisions and protection requirements of the corresponding European Directives. This equipment is designed for professional video appliances and can be used in the following environments:

- residential area (in houses) or rural area
- commercial and light industry; e.g. offices or theatres
- urban outdoors

In order to keep the best performance and furthermore for electromagnetic compatibility we recommend to use cables not exceeding the following length:

Port	Cable	Length	Port	Cable	Length
DC IN	Exclusive Cable	5 meters	REMOTE	Exclusive Cable	5 meters
AUD IN FRONT	Shielded Twist Pair Cable	10 meters	MONITOR OUT	Coaxial Cable	10 meters
AUD IN REAR	Shielded Twist Pair Cable	10 meters	Y/C OUT	Exclusive Cable	10 meters
LINE OUT	Exclusive Cable	10 meters	DV	Exclusive Cable	4.5 meters
EARPHONE	Cable with earphone	2 meters	TC IN	Coaxial Cable	10 meters
DC OUT	Exclusive Cable	1 meter	TC OUT	Coaxial Cable	10 meters
GENLOCK/AUX IN	Coaxial Cable	10 meters	INTERCOM	Exclusive Cable	2 meters
VIDEO OUT	Coaxial Cable	10 meters	PROMPTER OUT	Coaxial Cable	10 meters
			VTR/RM	Exclusive Cable	200 meters MAX

Caution : Where there are strong electromagnetic waves or magnetism, for example near a radio or TV transmitter, transformer, motor, etc., the picture and the sound may be disturbed. In such case, please keep the apparatus away from the sources of the disturbance.

SAFETY PRECAUTIONS

WARNING:
TO REDUCE THE RISK OF FIRE OR ELECTRIC SHOCK, DO NOT EXPOSE THIS APPLIANCE TO RAIN OR MOISTURE.
This unit should be used with 12V DC only.
CAUTION:
To prevent electric shocks and fire hazards, do NOT use any other power source.

NOTE:
The rating plate (serial number plate) is on the top frame.

CAUTION
To prevent electric shock, do not open the cabinet. No user serviceable parts inside. Refer servicing to qualified service personnel.

AVERTISSEMENT :
POUR EVITER LES RISQUES D'INCENDIE OU D'ELECTROCUTION, NE PAS EXPOSER L'APPAREIL A L'HUMIDITE OU A LA PLUIE.
Ce magnétoscope ne doit être utilisé que sur du courant direct en 12V.
ATTENTION :
Afin d'eviter tout resque d'incendie ou d'électrocution, ne pas utillser d'autres sources d'alimentation électrique.

REMARQUE :
La plaque d'identification (numéro de série) se trouve sur le panneau arrière de l'appareil.

WARNING ON LITHIUM BATTERY
The battery used in this device may present a fire or chemical burn hazard if mistreated. Do not recharge, disassemble, heat above 100°C (212°F) or incinerate.
Replace battery with Matsushita Electric CR2032, use of another battery may present a risk of fire or explosion.
- Dispose of used battery promptly.
- Keep away from children.
- Do not disassemble and do not dispose of in fire.

For Sweden

VARNING
Explosionsfara vid felaktigt batteribyte.
Använd samma batterityp eller en ekvivalent typ som rekommenderas av apparattillverkaren.
Kassera använt batteri enligt fabrikantens instruktion.

For Norway

ADVARSEL
Lithiumbatteri–Eksplosjonsfare.
Ved utskifting benyttes kun batteri som anbefalt av apparatfabrikantetn.
Brukt batteri returneres apparatieverandøren.

For Denmark

ADVARSELI
Lithiumbatteri–Eksplosionsfare ved fejlagtig handtering.
Udskiftning ma kun ske med batteri af samme fabrikat og type.
Lever det brugte batteri tilbage til leverandøren.

For Finland

VAROITUS
Paristo voi räjähtää, jos se ön virheellisesti asennettu.
Vaihda paristo ainoastaan laitevaimistajan suoaittelemaan tyyppiin. Hävitä käytetty paristo valmistajan ohjeiden mukaisesti.

SAFETY PRECAUTIONS

FOR USA AND CANADA

CAUTION
RISK OF ELECTRIC SHOCK DO NOT OPEN

AUTION : TO REDUCE THE RISK OF ELECTRIC SHOCK, DO NOT REMOVE COVER (OR BACK). NO USER SERVICEABLE PARTS INSIDE. REFER SERVICING TO QUALIFIED SERVICE PERSONNEL.

The lightning flash with arrowhead symbol, within an equilateral triangle is intended to alert the user to the presence of uninsulated "dangerous voltage" within the product's enclosure that may be of sufficient magnitude to constitute a risk of electric shock to persons.

The exclamation point within an equilateral triangle is intended to alert the user to the presence of important operating and maintenance (servicing) instructions in the literature accompanying the appliance.

INFORMATION FOR USA

INFORMATION

This equipment has been tested and found to comply with the limits for a Class B digital device, pursuant to Part 15 of the FCC Rules. These limits are designed to provide reasonable protection against harmful interference in a residential installation. This equipment generates, uses, and can radiate radio frequency energy and, if not installed and used in accordance with the instructions, may cause harmfull interfrence to radio communications. However, there is no guarantee that interference will not occur in a particular installation. If this equipment does cause harmful interference to radio or television reception, which can be determined by turning the equipment off and on, the user is encouraged to try to correct the interference by one or more of the following measures:

- Reorient or relocate the receiving antenna.
- Increase the separation between the equipment and receiver.
- Connect the equipment into an outlet on a circuit different from that to which the receiver is connected.
- Consult the dealer or an experienced radio/TV technician for help.

CAUTION

CHANGES OR MODIFICATIONS NOT APPROVED BY JVC COULD VOID USER'S AUTHORITY TO OPERATE THE EQUIPMENT.

THIS DEVICE COMPLIES WITH PART 15 OF THE FCC RULES. OPERATION IS SUBJECT TO THE FOLLOWING TWO CONDITIONS : (1) THIS DEVICE MAY NOT CAUSE HARMFUL INTERFERENCE, AND (2) THIS DEVICE MUST ACCEPT ANY INTERFERENCE RECEIVED, INCLUDING INTERFERENCE THAT MAY CAUSE UNDESIRED OPERATION

INFORMATION (FOR CANADA) RENSEIGNEMENT (POUR CANADA)

This Class B digital apparatus complies with Canadian ICES-003.

Cet appareil numérique de la Class B est conforme à la norme NMB-003 du Canada.

WARNING:
TO REDUCE THE RISK OF FIRE OR ELECTRIC SHOCK, DO NOT EXPOSE THIS APPLIANCE TO RAIN OR MOISTURE.
This unit should be used with 12V DC only.
CAUTION:
To prevent electric shocks and fire hazards, do NOT use any other power source.

NOTE:
The rating plate (serial number plate) is on the top frame.

CAUTION
To prevent electric shock, do not open the cabinet. No user serviceable parts inside. Refer servicing to qualified service personnel.

AVERTISSEMENT :
POUR EVITER LES RISQUES D'INCENDIE OU D'ELECTROCUTION, NE PAS EXPOSER L'APPAREIL A L'HUMIDITE OU A LA PLUIE.
Ce magnétoscope ne doit être utilisé que sur du courant direct en 12V.
ATTENTION :
Afin d'eviter tout resque d'incendie ou d'électrocution, ne pas utillser d'autres sources d'alimentation électrique.

REMARQUE :
La plaque d'identification (numéro de série) se trouve sur le panneau arrière de l'appareil.

WARNING ON LITHIUM BATTERY
The battery used in this device may present a fire or chemical burn hazard if mistreated. Do not recharge, disassemble, heat avobe 100°C (212°F) or incinerate.
Replace battery with Matsushita Electric CR2032, use of another battery may present a risk of fire or explosion.
- Dispose of used battery promptly.
- Keep away from children.
- Do not disassemble and do not dispose of in fire.

Thank you for purchasing the DV Camcorder GY-DV550.
These instructions are for GY-DV550U.

Mini DV

This unit is a MiniDV video system format camcorder. Videocassettes which are not marked with the MiniDV symbol cannot be used with this unit.

The following phenomena may occur when tapes recorded on other units (including another GY-DV550) are recorded or played back on this camcorder.
- The transient section between scenes recorded on other units and those recorded on this unit may appear disturbed.
- Digital noise may appear during playback due to tracking errors.

- This unit records and plays back in the SP mode. Recording or playback in the LP mode is not possible.
- Due to manufacturing dispersion of tapes, we recommend not to record pictures within the first 2 to 3 minutes from the beginning of the tape.
- Before recording important scenes, be sure to perform a test recording and confirm that both video and audio are recorded correctly.
- Recorded video and audio contents are for private use. Other use may infringe on the rights of copyright holders.
- JVC cannot assume liabilities that may derive from the impossibility of normal recording or playback of video or audio due to malfunction of the camcorder or the videocassette.

MAIN FEATURES

- Compact, lightweight design
  Compact and light weight body was realized by use of magnesium die cast.
- DV high-quality digital format
  The 4:1:1 (U MODEL)/4:2:0 (E MODEL), 8-bit, 25 Mbps component digital processing of the format ensures recording and playback with high picture quality.
- High sound quality thanks to PCM audio
  Two types of sampling, 16-bit, 48 kHz sampling and 12-bit, 32 kHz sampling, ensure high-quality digital audio.
- 26-pin camera terminal
  The terminal can be used to connect an external VCR and camera remote control unit. The recording VCR can be selected in the VTR SELECT switch.
  (Main unit/parallel/external VCR)
- External video input capability
  External composite video can be recorded with this unit.
- Character mixing capability for monitor output
  Characters can be mixed for output to the MONITOR OUT connector using menu setting.
- Audio reference recording level selected
  The audio reference recording level can be set to -20dB or -12dB in the menu.
- Normal/LETTER (16:9) screen switching capability
  You can switch between 4:3 ratio screen and 16:9 ratio screen in the menu.
- Concentrated LCD display (back-lit)
  The concentrated LCD panel shows the time code and CTL counter, tape remaining time, remaining battery power, audio levels, VCR section setup menus, hour meter data, and a variety of warning indications. The display is back-lit to facilitate viewing in dark locations.
- Time code reader/generator
  The built-in time code reader/generator can be used to record SMPTE (U MODEL)/EBU (E MODEL) time code and user's bits.
- Time code input/output connectors for slave lock capability
  This unit can be slave-locked to an external time code generator which is connected to the time code input.
  The data in the built-in time code generator is output from the time code output terminal.
- Built-in monitor loudspeaker for audio checking
  The input audio can be monitored in recording or EE mode. The playback sound can be monitored in the playback mode. The loudspeaker also outputs an alarm tone in case an abnormal condition occurs in the unit.
- Rec check function for convenient recording review
- Camera section designed with 3-CCD system for high-quality picture
  Three 1/2" CCDs with 380,000 effective pixels employed. Digital signal processing for reproduction of high-quality picture.
- Super sensitivity F/11, 2000 lux
  Enables shooting at normal indoor illumination eliminating the need for extra illumination.
- LOLUX for 0.75 lux (F1.4) illumination
  Employment of LOLUX mode ensures +33 dB gain. This is ideal for difficult shooting conditions with almost no illumination.
- Multi-Zone Auto Iris Detection Circuit
  Multi-zone auto iris detection circuit ensures optimum iris position even in backlit conditions or when a bright subject moves in a frame. Switch provided for selecting over or under level.
- Safety Zone indication in viewfinder
  Two types of safety zone indicator functions provided. Center mark can be turned ON/OFF.
- Zebra pattern video level indication in viewfinder
  Select video level indicated by zebra pattern by means of menu setting.
- Full Auto Shooting (FAS) function
  Eliminating the need for troublesome switch or filter operations, the FAS function automatically provides a wide range of compatibility with shooting conditions which varies as you move between indoors and outdoors or between bright and dark locations.
- Color temperature conversion filters for "3200K", "5600K + 1/8ND", "5600 K + 1/64ND" provided.
- Variable scan shutter
  Eliminates flicker when shooting other screen pictures than NTSC, such as computer monitor screens.
  Copes with the range from 60.1 Hz to 2084.6 Hz.
- DV (i. LINK) connector
  DV connector (4-pin) provided. Enables transfer of digital data to other equipment provided with DV connector, such as a non-linear editing controller.
- S.S.F. (Super Scene Finder) function
  Enables memorization of the start point and ending point of each scene or memorization of CUE points.
- Camera (Video) output, VCR playback output (composite/YC) possible
- GENLOCK input connector
- Equipped with remote control system compatible GENLOCK function with SC (Sub Carrier) lock.
- Built-in color bar (SMPTE type) (U MODEL)
  Built-in colour bar (EBU type) (E MODEL)
- Superior operability with shutter speed and menus selected by dial.

CONTENTS

INTRODUCTION

MAIN FEATURES 4

1. INTRODUCTION

1-1 Main Unit Configuration 6
1-2 Precautions for Proper Use 7
1-3 Routine and Periodical Maintenance 8
1-4 Precautions for Use of Head Cleaning Tape 8
1-5 Videocassette to be Used 9
1-6 Battery Pack to be Used 9
1-7 Condensation 9
1-8 Characteristic CCD Phenomena 9

2. CONTROLS, INDICATORS AND CONNECTORS

2-1 Front Section 10
2-2 Right Side Section 12
2-3 Left Side Section 18
2-4 Top Section 19
2-5 Adapter Section 20
2-6 Rear Section 22
2-7 Counter Display Contents 24
2-8 Lens (optional) 25
2-9 1.5-Inch Viewfinder (optional) 26
2-10 Indications in Viewfinder 27
• Warning LED Indicators Inside the Viewfinder 27
• Viewfinder Screen Display 27

PREPARATIONS

3. BASIC SYSTEM CONNECTIONS AND ADJUSTMENTS

3-1 Basic System 32
3-2 Attaching the Zoom Lens (optional) 33
3-3 Attaching the Viewfinder 33
3-4 Attaching the Microphone (provided) 34
3-5 Attaching the Microphone (optional) 34
3-6 Attaching the Tripod Base (provided) 35
3-7 Attaching the 4-inch Viewfinder (VF-P400) 35
3-8 Inserting and Replacing Backup Lithium Batteries .. 36

4. POWER SUPPLY

4-1 AC Operation 37
4-2 Battery Pack Operation 37
• Attaching a Flat Shape Type Battery Pack 38
• Using an Anton-Bauer Battery Pack 39
• Remaining Battery Power Display 40
• Precautions for the Battery Pack 40

BASIC OPERATIONS

5. PREPARATIONS

5-1 Turning the Power ON 41
5-2 Cassette Loading and Unloading 42
5-3 Setting the Date and Time 43

6. SETTING AND ADJUSTMENTS BEFORE SHOOTING

6-1 Camera Settings 44
6-2 Screen Size (4:3/16:9 aspect ratio) Mode Selection 44
6-3 Viewfinder Adjustment 45
6-4 External Monitor Adjustment 45
6-5 Back Focus Adjustment 46
6-6 White Balance Adjustment 47
• White Balance Adjustment 47
• Full-Time Auto White Balance (FAW) 47
6-7 Mixing Characters to MONITOR OUT 48
6-8 Switch Settings of the VCR Section 49
6-9 Audio Input Signal Selection 50
6-10 Audio Input Level Adjustment 51
6-11 Monitoring Audio during Recording 52

7. SHOOTING OPERATION

7-1 Basic Recording Operation 53
7-2 VCR Save Mode 55
7-3 If Unit is Left in Record-Pause (Standby) Mode 55
7-4 Checking Recorded Contents in Record-Pause Mode (Recording Check Function) 56
7-5 Recording External Video Signals 57
7-6 Recording with an External VCR 58

8. PLAYBACK MODE

8-1 Playback Procedure 60
8-2 Fast-Forward, Rewind 61
8-3 Search 61

APPLICATION

9. TIME CODE OPERATION

9-1 Displaying Time Code 62
9-2 Presetting and Recording of Time Code 62
• Time Code Presetting Procedure 63
• Presetting User's Bit Data 63
9-3 Recording Time Codes by Slave-Locking the Built-in Time Code Generator with External TCG 64
9-4 Recording Time Codes in Continuation of Time Codes Recorded on Tape 65
9-5 Reproducing Time Codes 65

10. S.S.F. (Super Scene Finder) FUNCTION

10-1 Explanation of the S.S.F. Function 66
10-2 How to Use the S.S.F. Function 67
10-3 Deleting S.S.F. Data 68
10-4 Resetting S.S.F. Data 68
10-5 Writing S.S.F. Data to Tape 69
10-6 Outputting S.S.F. Data 69

11. USING EXTERNAL COMPONENTS

11-1 Connecting a Video Component with DV Connector 70
11-2 Connecting a PC 71

12. SETUP MENU

12-1 VCR Setup Menu 72
• VCR Setup Menu Configuration 72
• Displaying and Setting VCR Setup Menus 73
• VCR Setup Menu Contents 74
12-2 Camera Menu Screen Flow 76
12-3 How to Select from the Camera Menu 77
12-4 VF Display Screen 78
12-5 OPERATION Screen 79
12-6 PROCESS Screen 80
12-7 ADVANCED PROCESS Screen 81
12-8 SKIN COLOR ADJUST Screen 81
12-9 FILE MANAGE Screen 82
12-10 SETUP Screen 83
12-11 TIME DATE Screen 84
12-12 Resetting of Camera Menu Setting Values 85

13. FEATURES OF THE CAMERA SECTION

13-1 Full-Time Auto White Balance (FAW) 86
13-2 IRIS (Brightness) Adjustment 87
• Adjustment of Lens Iris 87
• Zebra Pattern Display during Manual Adjustment 87
13-3 Shooting the Screen Image on a Computer Monitor 88
13-4 Gain (Sensitivity) Adjustment 89
• Gain Switching 89
• Gain Boost under LOLUX Condition 89
13-5 Switch Setup According to Illumination and Subject 90
• Switch Functions 90
• Full Auto Shooting (FAS) Function 90
13-6 How to Use Skin Tone Detail 91
13-7 Connecting the Local Remote Control Unit 93
13-8 Connecting the Camera Remote Control Unit 94

OTHERS

14. OTHERS

14-1 Troubleshooting 96
• Alarm Indications 96
• Warnings in Viewfinder 98
• Troubles with Error Code Outputs 100
• Troubles without Error Code Outputs 101
14-2 Hour Meter Display 102
14-3 Specifications 103
• Optional Accessories 104
• External Dimensions 104

1. INTRODUCTION

1-1 Main Unit Configuration

The GY-DV550 configuration is as shown below.

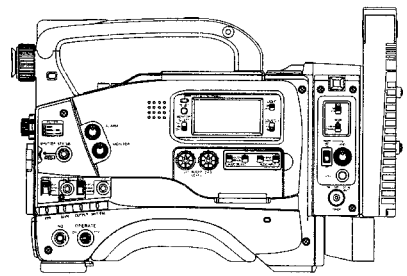

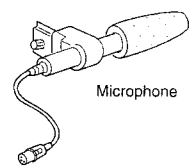

Microphone

Lithium battery

Head cleaning tape

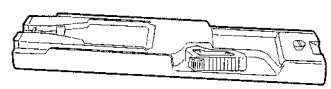

Tripod base

CAUTION :

- The front base mount may be locked while the pin of the tripod base is not inserted into the hole on the rear base mount of the unit. Therefore, after mounting, make sure that these parts are engaged properly.
- When moving the GY-DV550 mounted on a tripod, any impact or vibration should be avoided as this may cause the unit to become detached and to drop from the tripod. Be sure to remove the unit from the tripod before transporting it.

1-2 Precautions for Proper Use

- Supply voltage
  Make sure that the power is between 11 V and 15 V DC. If the power voltage is too low, abnormal color and increased noise may occur. Do not exceed 15 V DC in any case, or the unit could be damaged.
- Allowable ambient temperature and humidity
  Be sure to use the unit within the allowable temperature range of 0°C to 40°C and a relative humidity of 30% to 80%. Using the unit at a temperature or humidity outside the allowable ranges could result not only in malfunction but the impact on the CCD elements could be serious as small white spots may be generated. When storing the GY-DV550 for a long time, the storage temperatures should be -20°C to 60°C.
- Strong electromagnetic waves or magnetism
  Noise may appear in the picture or audio and/or the colors may be incorrect if the camera is used near a radio or television transmitting antenna, in places where strong magnetic fields are generated by transformers, motors, etc., or near devices emitting radio waves, such as transceivers or cellular phones.
- Use of wireless microphone near the camera
  When a wireless microphone or wireless microphone tuner is used near the camera during recording, the tuner could pick up noise.
- Avoid using or placing the unit in places;
  - subject to extreme heat or cold;
  - with excessive dirt or dust;
  - with high humidity or moisture;
  - subject to smoke or vapour such as near a cooking stove;
  - subject to strong vibrations or on an unstable surface.
  - also do not leave the unit for long hours in a parked car under direct sunlight or near room heating equipment.
- Protect the unit from being splashed with water (especially when shooting in the rain).
- Protect the unit from being wet when shooting on a beach. In addition, salt and sand may adhere to the camera body. Be sure to clean the camera after use.
- Protect the unit against penetration of dust when using it in a place subject to sandy dust.
- Optical performance of lens
  Due to the optical performance of the lens, color divergence phenomena (magnification chromatic aberration) may occur at the periphery of the image. This is not a camera malfunction.
- Noise may appear in the viewfinder when switching between the playback picture and the EE picture.
- Setup level
  The video signal of the unit's video output is provided with a setup level when shipped from the factory. To turn off setup, set SETUP in the Camera Setup screen to OFF.
- Use the unit in an upright position.
  If placed on its side, heat release efficiency will deteriorate, adversely affecting the tape transport. Depending on circumstances the tape may also be damaged.
- Vibrations
  Colors may fail to appear during VCR playback in locations subjected to vibrations.
- Precautions for transportation
  Do not drop or hit the unit against a hard object.
- Remove the videocassette before transporting the unit.
- Do not insert an object other than a videocassette in the cassette insertion slot. Be sure to close the cassette cover when the unit is not to be used for a long period
- Do not set the OPERATE switch to OFF or remove the power cable during recording or playback. Otherwise the tape may be damaged.
- The sensitivity level of the provided microphone is set lower than the reference input (- 60 dBs) setting.
- When the unit is not in use, be sure to set the POWER switch to OFF in order to reduce power consumption.
- Cleaning the body: Wipe body with a dry, soft cloth. When it is extremely dirty, soak the cloth in a solution of neutral detergent, wring it out and then wipe. To prevent deformation of the body, etc. and to avoid operation hazards, do not allow volatile liquids such as benzine and thinner to touch the body, and do not wipe it with a cloth soaked in such a liquid.
- The camera may be unstable in the period immediately after the power is turned on, but this is not a malfunction.
- If a tape containing recorded PAL signals is played back, the GY-DV550 automatically enters the STOP mode. If this happens, remove the videocassette so that the unit returns to its normal state.
- When turning on the power with the tape inserted or after loading a tape, the built-in head cleaner will emit a sound while operating. However, this is not a malfunction of the unit.

CAUTION :

- Do not point the lens or viewfinder directly at the sun or other strong light source.
  - Eye damage could result.
  - If the lens or viewfinder is left pointed at the sun, rays may collect inside the unit and cause damage or a fire.
- When carrying the camera, be sure to hold the carrying handle. Holding the lens or viewfinder may result in damage.

1-3 Routine and Periodical Maintenance

The GY-DV550 incorporates precision mechanical parts, which will collect dirt, wear out and deteriorate as the unit is used. On the other hand, when the unit has been used for a long period in a normal environment, the heads, drums and tape transport mechanisms also collect dirt deposited on them. Furthermore, dust which penetrates the inside of the VCR section especially during outdoor use will promote the wear and deterioration of mechanical parts by causing poor contact between tape and heads or failing to maintain the video and audio quality at high levels. To prevent wear and deterioration, clean the mechanical parts using a head cleaning tape as routine maintenance. However, cleaning with a head cleaning tape alone is not enough for cleaning the entire tape transport mechanism, it is also recommended to apply periodical maintenance (inspection) to prevent troubles that may be caused by the sudden occurrence of failure. As the replacement, adjustment and servicing of parts require advanced skill and equipment, please consult the person in charge of professional video equipment at your nearest JVC-authorized service agent.

Head Cleaning

- To maintain beautiful pictures and sound, be sure to use a head cleaning tape to clean the head periodically. (Read the "Precautions for Use of Head Cleaning Tape" on page 8.) If head cleaning is not performed periodically, a type of mosaic noise called block noise may appear in the picture or sound may be interrupted.

Block Noise

- Use the provided head cleaning tape. Do not use head cleaning tapes other than specified. For instructions on how to use the head cleaning tape and precautions for its use, read the "Precautions for Use of Head Cleaning Tape" on page 8.
- When dirt adheres to the heads of the GY-DV550, the following indications appear during playback and recording check using the RET button on the lens section.
  - "RF" appears on the display panel.
  - "HEAD CLOG" appears on the counter display.
  - "VTR WARNING (HEAD)" appears in the viewfinder.
- If this kind of indication appears, please stop the recording. Head cleaning is required. This indicator disappears when the OPERATE is turned OFF, or when the cleaning tape is played back.

Periodical Maintenance

Contents : Check or replace the following mechanical parts according to the running time.

Running Time	500H	1000 H	1500H	2000H
Drum ass'y (including heads)	○	○	○	●
Head cleaner	☆	●	☆	●
Tape guides & rollers	○	☆	☆	●
Rotary encoder	–	☆	–	●
Belts & gears	☆	●	☆	●
Drive parts	○	○	☆	●

○: Clean, check and adjust.
☆: Clean and check. Replace as required.
●: Replace.

- The maintenance contents vary depending on the operating environment and method. Therefore, the above data should be considered as a reference.

Time management

The accumulated running time of the unit can be confirmed with the hour meter display (which shows the accumulated drum running time). For details, see "HOUR METER DISPLAY" on page 102.

For consultations related to the maintenance programming or cost, please contact the person in charge of professional video equipment at your nearest JVC-authorized service agent.

1-4 Precautions for Use of Head Cleaning Tape

Adhere to the following precautions when using the head cleaning tape.

1. The tape runs for 10 seconds at a time in the PLAY mode. (The tape stops automatically and then the unit enters the SAVE MODE. However, the display back light is not turned off.) Press the PLAY button after the cleaning tape is fully loaded.
2. Do not use the tape more than four times at the most for each cleaning.
3. The cleaning tape can be used approximately 100 times.

■ Use the following chart as a guide for periodical head cleaning.

Operating environment	Low temperature 0°C to 10°C	Room temperature 10°C to 35°C	High temperature 35°C to 40°C
Yardstick for use of cleaning tape	1 to 2 times every 5 hours	1 to 2 times every 20 to 30 hours	1 to 2 times every 5 hours

Note 1) When used in a low humidity environment (10% RH to 30% RH), head cleaning should be conducted at intervals half of those given in the above chart.
Note 2) If an ME80 tape is used immediately after head cleaning, the VTR warning (head) indicator may remain on. In this case, let the tape run as the indicator will turn off after the tape has run for a while.
Note 3) Use the cleaning tape in the room temperature (10°C to 35°C).
Note 4) The cleaning tape case contains instructions for use of the cleaning tape. However, some of these instructions differ from the contents of this sheet. When using the cleaning tape, please follow the instructions of this sheet.

For servicing
See the service manual of the GY-DV500 (No. 60125) page 2-5, "2.4 MAINTENANCE AND INSPECTION OF MAJOR PARTS".

1-5 Videocassette to be Used

- Use JVC's videocassette tapes marked with MiniDV for this unit.
  Please use DVM60 or DVM30 type videocassettes.
- Videocassettes cannot be used upside down.
- Avoid storing a videocassette with unevenly wound tape, as this may damage the tape. Rewind it to the beginning before placing a cassette into storage.
- Store videocassettes in a place with little humidity and good ventilation where mould does not form.
- **After a videocassette tape has been used repeatedly, it becomes unable to maintain full performance due to an increase in noise caused by dropouts, etc. Do not continue to use a dirty or damaged tape, as this will reduce the rotary head life.**
- **Videocassette tapes marked MiniDV are provided with a switch on the back for use in preventing accidental erasure.**
- Slide the switch to SAVE to protect the required recording in the tape from being overwritten.
- To record on the tape, slide the switch to REC.

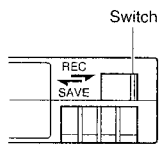

1-6 Battery Pack to be Used

The GY-DV550 can use any of the following battery packs.
- Flat shape type
- Anton-Bauer battery pack: Trimpack 13/14 Series
  Magnum 13/14 Series
  Compack 13/14 Series
  Propack 13/14 Series

* An Anton-Bauer battery pack cannot be connected directly to the camera. It is necessary to mount the optional battery holder.
- Battery holder: Anton-Bauer QRQ27
  For details on how to mount the battery holder, see page 39.

To display the remaining battery power accurately, set the VCR Setup Menu item No. 396 BATTERY TYPE according to the type of the battery pack in use. (See page 75)

1-7 Condensation

- If the unit has been cooled down in a cold place and is then carried to a warm place, the moisture contained in the warm air may adhere to the head drum or tape guides and be cooled into water droplets. This phenomenon is referred to as condensation (dewing). When this occurs, the head drum and tape guides are covered with droplets allowing the tape to be stuck to them, leading to tape damage.
- Condensation occurs in the following cases:
  - When the unit is suddenly moved from a cold place to a warm place.
  - When a room heater has just started or when the unit is exposed directly to cold air from an air conditioner.
  - When the unit is placed in a very humid place.

Do not leave the videocassette inserted when moving the camera under conditions where the temperature environment changes.

- When condensation occurs in this unit, the DEW indicator on the display lights up, and the WARNING LED blinks red. (See page 96) To remedy, leave the unit with the power ON and wait until the WARNING LED stops blinking red and the DEW indicator disappears from the counter display.

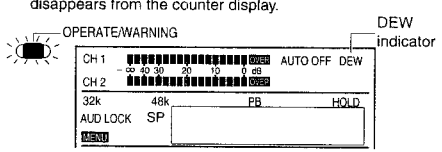

1-8 Characteristic CCD Phenomena

Smear and Blooming

Due to the physical structure of a CCD it is possible to induce vertical streaking (called "smear") when shooting an extremely bright light source. Another effect is the expansion of light around a bright light or object (called "blooming").
The CCD employed in this unit is characterized by inducing very little smear or blooming. Nevertheless, please be careful when shooting a bright light source.

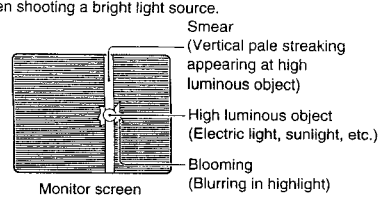

Moire or Aliasing

Shooting stripes or fine patterns may cause a jagged effect or a banding in fine mesh patterns.

White dots

High temperatures can cause CCD sensor pixels to malfunction with the effect of white dots in the image. This condition is conspicuous especially when gain is applied.
This is a characteristic of the charged-coupled device (CCD). As far as possible, use the unit under conditions where the temperature of the unit does not increase.

2. CONTROLS, INDICATORS AND CONNECTORS

2-1 Front Section

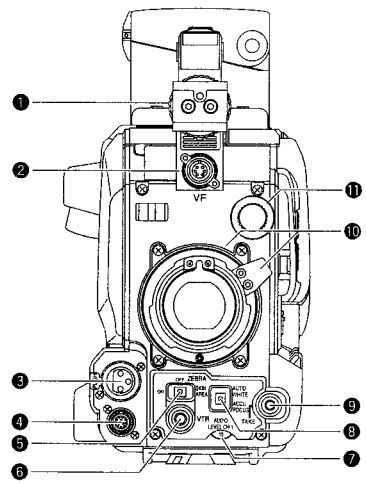

1 Viewfinder mount base, sliding securing ring
Mount the viewfinder on the base and secure it using the sliding securing ring.
☞ See "Attaching the Viewfinder" on page 33.

2 [VF] Viewfinder connector (6-pin)
Connect the cable from the viewfinder here.

3 [AUDIO IN FRONT] Audio input front connector (XLR 3-pin)
Audio input terminal for connecting camera microphone or external audio devices.
- Set AUDIO IN FRONT LINE/MIC switch 6 on page 23 according to the connecting device.
- When recording audio from this terminal, set CH-1 AUDIO INPUT switch 7 or CH-2 AUDIO INPUT switch 8 to FRONT.
  ☞ See page 14.

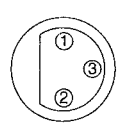

Pin No.	Function
1	GND
2	HOT
3	COLD

CAUTION:
The provided microphone is a phantom microphone. When using the provided microphone, set AUDIO IN FRONT LINE/MIC switch to MIC+48V ON.
When using audio input device other than a phantom microphone, set AUDIO IN FRONT LINE/MIC switch to LINE or MIC before connecting the device.

4 [LENS] Lens control connector
Connect 12-pin lens control cable from lens.

5 [ZEBRA] Switch
When this switch is ON, a zebra pattern is superimposed on the viewfinder areas having video levels with a luminance level of 70% to 80%. This pattern can be used as a reference for manual adjustment of the lens iris.
When CHARACTER MIX of the Camera SETUP Menu screen is set to ON, the zebra pattern will also appear in the MONITOR OUT connector video.
Zebra patterns are also displayed during color bar display.
* The zebra patterns are not generated for the Y/C OUT output.
☞ See "Zebra Pattern Display during Manual Adjustment" on page 87.
- The default value is 70% – 80%. The luminance level can be changed with the ZEBRA setting in the VF DISPLAY Menu screen.
  ☞ See "ZEBRA" item on page 78.

While this switch is pressed to the SKIN AREA side, the color tone areas specified with the SKIN DTL ADJUST item on the ADVANCED PROCESS MENU are indicated in the viewfinder. The switch returns to the OFF position when released.
☞ See "How to Use Skin Tone Detail" on page 91.
- The Skin Tone Detail color tone areas are not indicated while the VTR playback picture is shown in the viewfinder.

6 [VTR] VTR trigger button (record start/stop button)
Record start/stop can be effected with this button.
(It is interlocked with the VTR trigger button on the lens section.)

7 [AUDIO LEVEL CH-1] CH-1 audio input level control
Adjusts the audio input level of the CH1 audio signal. Normally, the camera is used with the control set to the maximum (10) position.
- To use this control, set the VCR Setup Menu item No. 246 CH1 FRONT VR ENABLE to "ENABLE".

Note:
Even when the VCR Setup Menu item No. 246 is set to DISABLE, the recording level changes slightly when this control is turned.

8 [AUTO WHITE/ACCU FOCUS] switch
AUTO WHITE:
- First, position a white object to occupy 80% of the centre of the image.
- Setting this switch to the upper position ("AUTO WHITE") will provide automatic adjustment for white balance.

* It is not activated in preset, full auto shooting, full-time auto white balance and color bar modes.
☞ See "White Balance Adjustment" on page 47.
ACCU FOCUS:
- When this switch is set to "ACCU FOCUS" in the lower position, the lens iris will be forced to open for approximately ten seconds.

2-1 Front Section (Cont'd)

- The depth of field can be reduced and the lens focusing can be adjusted more accurately.

CAUTION:
- As the automatic shutter is activated here, flicker may appear on the screen depending on the lighting conditions (such as a fluorescent lamp, etc.) Colors may appear for white subjects.
- This operation is not possible in the LOLUX mode.

❾ [TAKE] button

The Super Scene Finder (S.S.F.) function retains the time code data for IN point and OUT point or CUE point in the unit's memory.

☞ See "S.S.F. Function" on page 66.

❿ Lens mounting ring/Lens lock lever

Hold the lens and use the lever to turn the ring anticlockwise to release lens.

To mount lens make sure the lens guide pin fits well, and then turn the ring clockwise until firm.

☞ See "Attaching the Zoom Lens" on page 33.

⓫ [FILTER] Color temperature conversion filter control knob

This knob changes the internal color temperature filter.

☞ See "Camera Settings" on page 44.

2-2 Right Side Section

[Camera Setting Section]

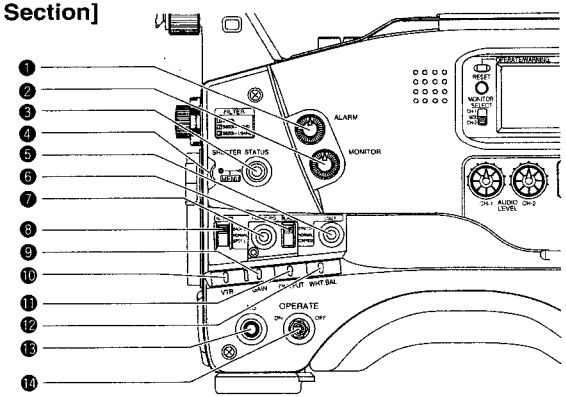

❶ [ALARM] Volume control

Turn to adjust the volume of the alarm tone that is output from the monitoring loudspeaker or earphone in case of a warning or other abnormal condition occurring with the GY-DV550.

Turn this control anticlockwise to reduce the volume. Setting this control to the minimum position mutes the alarm tone.

❷ [MONITOR] Audio monitor volume control

Adjusts the volume of the monitoring loudspeaker and earphone. The audio is muted when this control is set to the minimum position.

❸ [STATUS] Status/menu button

- Pressing this button in the normal screen mode (condition when menu is not shown) displays a status screen in the viewfinder. The displayed status mode changes each time the button is pressed.

☞ See "Status Screens" on page 27.

- Pressing this button for more than 1 second in the normal screen mode displays the Camera Menu screen in the viewfinder. Pressing this button while the menu screen is displayed in the viewfinder makes the menu screen disappear.

☞ See "How to Select from the Camera Menu" on page 77.

❹ [SHUTTER/MENU] dial

- Pressing this dial once in the normal screen mode (condition when menu is not shown) displays the shutter speed for approximately 5 seconds. When this dial is turned upwards while the shutter speed is displayed, the shutter speed becomes slower. When turned downwards, the shutter speed becomes faster. The selected shutter speed is memorised for each file. To return the memorised shutter speed to the factory preset, press the dial one more time while the shutter speed is displayed.
- When this dial is turned upwards or downwards while the menu screen is displayed, the cursor (>) also moves upwards or downwards to allow selection of items in the menu. To change the setting value of the item, press this dial. When the setting value starts blinking, turn this dial upwards or downwards to change the setting.

☞ See "How to Select from Camera Menu" on page 77.

CAUTION:

Due to the characteristics of the CCD, the screen will appear to be slightly colored when changing the shutter speed greatly. After changing the shutter speed, perform white balance again.

White balance may not work properly for high-speed shutters.

❺ [LOLUX] LOLUX On/Off button

This button toggles the LOLUX mode on and off.

- LOLUX gain gives extremely low light level sensitivity for special applications. This will result in an increase of 33 dB (approximately 45 times) in the LOLUX mode.
- LOLUX operation takes priority over normal gain setting.
- If the unit is placed in the LOLUX mode when it is in full auto shooting mode, the auto level control (ALC) (one of the full auto shooting functions) will be made inactive, so that the LOLUX mode is given preference (FAW still remains active).

☞ See "GAIN BOOST UNDER LOLUX CONDITION" on page 89.

❻ [BLACK] Black stretch/black compression switch

Switches the gain for the dark section of the image.

Set to an appropriate position depending on the video signal to be shot.

STRETCH	: By stretching the signal only for the dark section, contrast in the dark portion of the image is enhanced.
NORMAL	: Standard mode.
COMPRESS	: When an entire image is relatively light and the contrast is low, the gain of the dark section is compressed to increase the contrast.

❼ [FULL AUTO] Full auto shooting ON/OFF button and indicator

- This switch toggles the full auto shooting function on and off.
- The indicator lights when in the full auto mode.
- Full auto shooting combines the auto iris, auto level control (ALC) to automatically adjust the video signal level and the white balance to their optimum levels.

2-2 Right Side Section [Cont'd]

- The iris is placed in automatic mode even if the iris mode switch of the lens is in manual.
- The gain will vary continuously to the maximum of +12 dB. The shutter speed will vary continuously to the minimum of 1/240 (U MODEL)/1/200 (E MODEL) of a second.

☞ See "Full Auto Shooting (FAS) function" on page 90.

❽ [AUTO IRIS] Auto iris level switch

This switch selects the automatic iris adjustment reference value according to the condition in which the camera is used.

BACK L : Under back light (Opens the iris more than the standard level. The level of iris can be set in SPOT L/BACK L of the OPERATION MENU screen.) ☞ See page 79

NORMAL: Normal condition

SPOT L : Under spotlight (Closes the iris more than the standard level. The level of iris can be set in SPOT L/BACK L of the OPERATION MENU screen.) ☞ See page 79

☞ See "SWITCH FUNCTIONS" on page 90.

❾ [GAIN] switch

Electronically boosts the light sensitivity when there is insufficient illumination on the subject. The boosting level differs depending on the switch position as follows: (Factory presets)

L : 0 dB (no boosting is applied)
M : 9 dB (boosted to approximately 3 times the original)
H : 18 dB (boosted to approximately 8 times the original)

- The boosting level for each switch position can be changed with the OPERATION menu screen. (☞ See page 79.)

The more the boosting level is increased, the more the resulting image will be noisy.

❿ [VTR SAVE/STBY] switch

Used to select the status of the GY-DV550 when the power is turned ON and a videocassette is loaded.

STBY: The GY-DV550 is in the standby mode. When a recordable videocassette is loaded, the GY-DV550 enters the record-pause mode.

SAVE: The GY-DV550 is in the save mode.

- The status of the GY-DV550 is displayed on the Status screen 1 in the viewfinder.

⓫ [OUTPUT] Color bar/Camera/Auto knee switch

This switch is used to select the output signal. When the video signal from the shooting camera is selected, the auto knee function is available.

CAM. AUTO KNEE ON:
Outputs the video signal from the shooting camera. In this case mode, the auto knee function is available.

CAM. AUTO KNEE OFF:
Outputs the video signal from the shooting camera. In this mode, the auto knee function is not available.

BARS. AUTO KNEE OFF:
Outputs the color bar signal. In this mode, the auto knee function is not available. Set to this position when adjusting the video monitor or when recording the color bar signal.

- When the AUTO KNEE function is OFF, the point where the KNEE function takes effect (knee point) can be set using KNEE POINT in PROCESS MENU screen. ☞ See page 80

AUTO KNEE function

When shooting a foreground subject, such as a human being, etc., with a high-brightness background, if the brightness level is set for the foreground subject, the background image will be blurred with white. In such a case, a clearer background is obtained when the auto knee function is used.

It is effective especially in the following cases:

- When shooting a human being indoors with a view to the landscape out through a window.
- When shooting a human being in the shade on a fine day.
- When shooting a high-contrast scene.

CAUTION:

If a fast moving high-brightness section like a car in sunlight is shot, the auto knee function may change the brightness of the entire image along with the motion of the object. In this case, set the auto knee function to OFF.

⓬ [WHT.BAL] White balance switch

Three white balance modes are selectable with this switch.

B : If white balance is performed with the switch in this position, it will be memorised into B.

A : If white balance is performed with the switch in this position, it will be memorised into A.

PRST (PRESET) : A non-erasable white balance setting at 3200K.

- FAW (Full-time Auto White) mode can be set to A, B or PRESET with the OPERATION MENU (see page 79).

In the FAW mode, video color temperatures are constantly sampled for automatic adjustment to a proper white balance.

⓭ [NG] button

Pressing this button while recording or in the record-pause mode deletes the S.S.F. data stored in the memory of the GY-DV550 with the S.S.F. (Super Scene Finder) function. This function is only valid in the MARK mode.

☞ See "S.S.F. (Super Scene Finder) FUNCTION" on page 68.

⓮ [OPERATE] switch

Turn the power ON and OFF with this switch.

- When this switch set to ON while a videocassette is loaded, the GY-DV550 status differs depending on the setting of the VTR (SAVE/STBY) switch ⓾.

2-2 Right Side Section (Cont'd)

[VCR Setting Section]

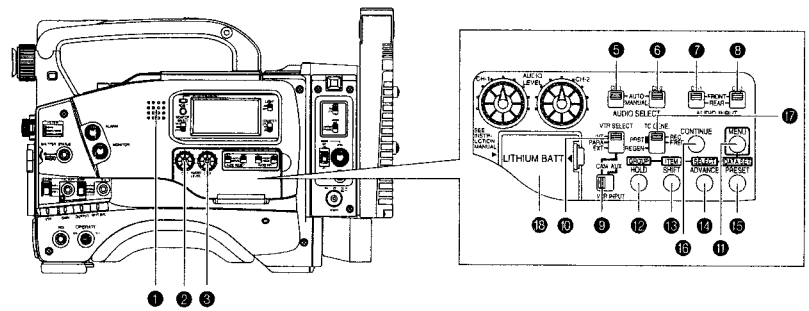

[Audio setting]

❶ Monitoring loudspeaker

- Enables EE monitoring of the input audio signal during recording, in the record-pause mode or in the stop mode. Outputs the playback sound in the playback mode. The sound to be output can be selected using the MONITOR SELECT switch ❹.
- The loudspeaker volume can be adjusted with the MONITOR volume control ❷ on page 12. The audio from the loudspeaker is not output when an earphone is plugged into the EARPHONE jack ❷ on page 22. The warning alarm tones are also output through this loudspeaker.

☞ See "ALARM INDICATIONS" on pages 96.

❷ [CH1 AUDIO LEVEL] CH1 audio input level control

Adjust the audio input level of the CH1 audio channel with this control.

- To use this control, set the CH1 AUDIO SELECT switch ❺ to "MANUAL". This control works regardless of the setting of the VCR Setup Menu item No. 246 CH1 FRONT VR ENABLE. To use this control, set the AUDIO LEVEL CH-1 audio input level control (❼ on page 10) on the front section to the maximum (10) position, or set the VCR Setup Menu item No. 246 CH1 FRONT VR ENABLE to "DISABLE".

❸ [CH2 AUDIO LEVEL] CH2 audio input level control

Adjust the audio input level of the CH2 audio channel with this control.

- This control is valid only when the CH2 AUDIO SELECT switch ❻ is set to "MANUAL".

❹ [MONITOR SELECT] audio monitor selector switch

This switch is used to select the monitor sound output from the monitoring loudspeaker ❶ or via the EARPHONE jack ❷ on page 22.

CH-1 : The CH1 channel audio is output.
MIX : CH1 and CH2 channel audio are output mixed.
CH-2 : The CH2 channel audio is output.

CAUTION:

Make sure to move switches all the way. Do not leave a switch stopped in a midway position. Noise will be generated and operation irregularities will occur.

❺ [CH-1 AUDIO SELECT] selector switch

This switch is used to select the method for adjusting the audio input level of the CH-1 audio channel.

The reference audio input level to the tape can be set using No. 257 AUDIO REF. SIGNAL LEVEL in the VCR Setup Menu screen (-20dB or -12dB). ☞ See page 74

AUTO : The audio input level is held at the reference level even when sounds greater than the reference level are input. The audio input level does not increase when the input level is low.

MANUAL : The audio input level can be adjusted with the CH-1 AUDIO LEVEL control ❷ or the CH-1 AUDIO LEVEL control ❼ on page 10. To use the AUDIO LEVEL CH-1 audio input level control on the front section, set the VCR Setup Menu item No. 246 CH1 FRONT VR ENABLE to "ENABLE".

❻ [CH-2 AUDIO SELECT] selector switch

This switch is used to select the method for adjusting the audio input level of the CH-2 audio channel.

The reference audio input level to the tape can be set using No. 257 AUDIO REF. SIGNAL LEVEL in the VCR Setup Menu screen (-20dB or -12dB). ☞ See page 74

AUTO : The audio input level is held at the reference level even when sounds greater than the reference level are input. The audio input level does not increase when the input level is low.

MANUAL : The audio input level can be adjusted with the CH-2 AUDIO LEVEL control ❸.

❼ [CH-1 AUDIO INPUT] selector switch

This switch is used to select the input section of the CH1 audio channel.

FRONT : The sound from the AUDIO IN FRONT connector on the front side section is input.

REAR : The sound from the AUDIO IN REAR connector on the rear side section is input.

❽ [CH-2 AUDIO INPUT] selector switch

This switch is used to select the input section of the CH2 audio channel.

FRONT : The sound from the AUDIO IN FRONT connector on the front side section is input.

REAR : The sound from the AUDIO IN REAR connector on the rear side section is input.

2-2 Right Side Section (Cont'd)

[Video setting]

❾ [VTR INPUT] VTR input setting switch

Select whether to record camera images or composite video from an external device connected to the GENLOCK/AUX IN connector ❽ on page 18 with this unit.

CAM: Camera images are recorded
Synchronous signals can be inputted to the GENLOCK/AUX IN connector.
Set the VCR Setup Menu item No. 126 INPUT SELECT to CAMERA. ☞ See page 74

AUX: Composite video signals from the GENLOCK/AUX IN connector are recorded. External video signals are also outputted to the viewfinder.
Set the VCR Setup Menu item No. 126 INPUT SELECT to CAMERA. ☞ See page 74

Memo:

- Camera images are outputted to the VIDEO OUT connector ❼ on page 18 and VTR/RM multi-pin connector ❽ on page 21, even with the AUX setting.
- When setting the VTR/RM switch on page 20 to RM, the GENLOCK/AUX IN connector will be used for synchronous signal input.
- When AUX is set, GENLOCK is not available for MONITOR OUT and Y/C OUT signals.
- To input the image of the DV connector ❶ on page 22, set the VCR Setup Menu item No. 126 INPUT SELECT to IEEE 1394. ☞ See page 74

❿ [VTR SELECT] VTR setting switch

Select whether to use this unit or an external VCR connected to the VTR/RM multi-pin connector of page 21 for recording. This switch is enabled only when [VTR INPUT] switch ❾ is set to CAM.

INT: This unit is used to record.
PARA: This unit and external VCR are used to record.
EXIT: Only the external VCR is used to record. Recording on the external VCR can be started and stopped by using the VCR start button on this unit.

[VCR menu/Time date setting]

⓫ [MENU] button

Press this button to enter the VCR setup menu mode. When the VCR setup menu mode is engaged, the "MENU" indicator in the LCD display lights and the counter display and viewfinder display are changed to the menu indication. In the VCR setup menu mode, pressing this button resumes the normal mode.

⓬ [HOLD/GROUP] button

- Press this button when presetting the time code or user's bit. The presently displayed data is held (the "HOLD" indicator lights on the display) and the leftmost digit of the counter blinks. Pressing this button during presetting of time code or user's bit cancels the operation and recalls the previous display contents.
- In setup menu mode, this button is used to select the menu group.

⓭ [SHIFT/ITEM] button

- During presetting of time code or user's bit, press this button to select the digit to be set. Each press of the button shifts the digit to be set (which blinks) to the right.
- In setup menu mode, this button is used to select the menu item.

⓮ [ADVANCE/SELECT] button

- During presetting of time code or user's bit, press to select the value of the digit to be set. Each press of the button increases the number by 1.
- In setup menu mode, this button is used to select the value of a menu item.

⓯ [PRESET/DATA SET] button

- During presetting of time code or user's bit, press to save the set value in the preset memory. The set time code or user's bit will be preset in the time code generator.
- In setup menu mode, this button is used to confirm the menu item setting and save the data in the memory.

- For details of the presetting of time code or user's bit, see page 63.
- For details on the setup menus, see page 73.

⓰ [CONTINUE] button

If this button is pressed simultaneously with the LOG button ❽ on page 19 during the stop mode, the tape winds to the last S.S.F. data OUT point.
☞ See "About the Scene End Cue Up Function" on page 69.

TIME CODE GENERATOR setting switches

⓱ [TC GENE] time code generator setting switch

Preset mode/regeneration mode setting switch for the time code generator. In addition the switch is used to select the time code run mode when in the preset mode. In the S.S.F. mode, time code generator will change to the regeneration mode.

REC : Preset mode. Set to this position when newly presetting and recording the time code. The time code mode of the time code generator will be in the REC run mode (time code runs only during recording).
This position allows you to record continuous time codes when recording scenes one after another.

FREE : Preset mode. Set to this position when newly presetting and recording the time code. The time code mode of the time code generator will be in the FREE run mode (time code runs permanently). Select this setting when the unit should be slave-locked with an external time code generator.

* If this position is used when recording scenes one after another, the time codes become discontinuous at the change points between scenes.

REGEN : Regeneration mode, in which the unit reads existing time codes on the tape and records time codes in continuation of the existing ones. Set to this position when you want to add additional time codes to time codes already recorded on the tape.

⓲ Lithium Battery Installation Compartment

Install a lithium battery (CR2032) in this compartment. The battery is used for the backup of the time code and time date. The GY-DV550 delivered without the battery installed. The provided lithium battery is for test use. It is recommended to install a new lithium battery. A new lithium battery can power the backup for about one year. See "How to Replace Backup Lithium Batteries" on page 36.

2-2 Right Side Section (Cont'd)

[VCR Display Section]

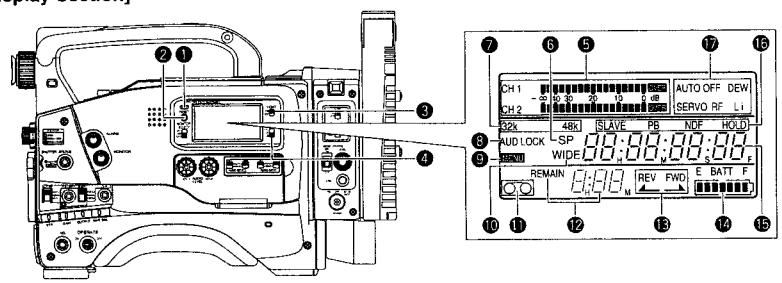

❶ [OPERATE/WARNING] indicator

Normally lights green.
Lights orange during the VTR SAVE (tape protect) mode. This indicator lights or blinks in red in the case of a warning condition related to the remaining tape time, remaining battery power or other abnormal condition in the unit.
For details, see "ALARM INDICATIONS" on pages 96.

❷ [RESET] button

- Press to reset the CTL counter value.
* Pressing the button during presetting of time code or user's bit resets the time code or user's bit data to "00:00:00:00".

❸ [LIGHT] switch

Turns the illumination of the back-lit display ON or OFF.
ON : The display is illuminated.
OFF : The display is not illuminated.
(Keep this switch at OFF during battery operation of the GY-DV550 or when it is required to reduce the power consumption for some reason.)

❹ [COUNTER] switch

Selects the contents displayed on the LCD counter display. The displayed contents when TC or UB is set can be selected using the VCR Setup Menu item No. 516 DISPLAY SELECT.

CTL : Set to this position to display the CTL counter.
TC : Set to this position to display time codes or for presetting the time code. (When the Menu item No. 516 DISPLAY SELECT is set to "TC")
Time (Hour, Min., Sec.) is displayed. (When the Menu item No. 516 DISPLAY SELECT is set to "CLOCK")
UB : Set to this position to display the user's bits of time codes or presetting the user's bit. (When the Menu item No. 516 DISPLAY SELECT is set to "TC")
Date (Day, month, year) is displayed. (When the Menu item No. 516 DISPLAY SELECT is set to "CLOCK")

☞ See "VCR Setup Menu Contents" on page 75.

❺ Audio level meters

Show the audio input level of the CH-1 and CH-2 channels in the record mode or EE mode.
In the playback mode, the meters show the playback audio level.
"OVER" lights in case of excessive input.
The reference recording level to the tape can be set using No. 257 AUDIO REF. SIGNAL LEV in the VCR Setup Menu screen (-20dB or -12dB). ☞ See page 74

CAUTION:

Immediately after the power is switched ON, the level meters may fluctuate. This is not a malfunction.

❻ SP indicator

Indicates the tape speed in record mode.

❼ 32k/48k sampling frequency indication

Indicates whether audio recording or playback occurs with 12-bit, 32 kHz sampling or 16-bit 48 kHz sampling.

- In the recording mode, the sampling frequency is set using the VCR Setup Menu item No. 245 SAMPLING RATE. In the playback mode, the indication conforms to the sampling rate of the recorded sound.

❽ [AUD LOCK] indicator

Indicates whether the audio signal is locked to the video signal during recording and playback.

❾ [MENU] indicator

Appears when the MENU button ❶ on page 15 is pressed to select the VCR Setup Menu.

❿ WIDE indicator

- During IEEE1394 input, the unit will display the "WIDE" indicator if the inputted data is of 16:9 aspect ratio.
- During playback and in the search modes, the "WIDE" indicator is displayed if the recording was made in the WIDE mode. The indicator remains off if the recording was made in the NORMAL or LETTER mode.

⓫ Cassette indicator

Lights when the unit is loaded with a videocassette. Blinks during ejection or tape loading.

⓬ [REMAIN] indicator

The remaining tape time (minutes and seconds) is shown. For details, see page "Remaining Tape Time Display" on page 24.

2-2 Right Side Section (Cont'd)

⓭ Tape transport direction indicators

◀REV FWD▶ One of the indicators lights according to the tape transport direction.
◀——▶ is displayed in the record-pause mode and in the still picture mode.

⓮ Remaining Battery Power Display

The 7-dot segment bar display shows the remaining battery power.

* To display the remaining battery power accurately, set the VCR Setup Menu item No. 396 BATTERY TYPE according to the type of the battery pack in use.
☞ See "Remaining Battery Power Display" on page 24.

⓯ Counter display

- Usually, this section shows the data of the CTL counter, time code or user's bit. The display mode can be selected with the ❹ COUNTER switch.
- Displays the VCR setup menu data when the GY-DV550 is in the VCR setup menu mode by pressing the MENU button ⓫ on page 15. The VCR setup menu includes the hour meter (accumulated drum operating time).
- This section shows an error code when an abnormal condition occurs with the unit.
☞ See "Counter Display Contents" on page 24.
☞ See "TROUBLES WITH ERROR CODE OUTPUTS" on page 100.

⓰ Section for time code related indications

■ **[SLAVE] Slave lock indicator**
This is the slave lock indicator which lights when the built-in time code generator is slave-locked (synchronized) with the LTC time code signal input at the TC IN connector.
For the slave lock of the time code, see page 64.

■ **[PB] Time code playback indicator**
Lights when the time code is in playback mode.

■ **[NDF] Non-drop frame indicator (U MODEL)**
Lights when the internal time code generator or the playback time code framing mode is non-drop frame. "DF" is displayed in the drop-frame mode.
- It never lights when the CTL counter is displayed.

■ **[HOLD] indicator**
Lights when the time code generator display is held by pressing the HOLD button in the time code setting block. The time code or user's bit can be preset while this indicator is lit.
☞ See "Displaying Time Code" on page 62.

⓱ Warning indicators

■ **[AUTO OFF] indicator**
Lights when a non-recoverable error (e.g. tape winding error, drum stopped, etc.) occurs with the unit. This indicator also lights if condensation occurs.
☞ See "TROUBLES WITH ERROR CODE OUTPUTS" on page 100.

■ **[DEW] indicator**
Lights when condensation (dewing) occurs on the drum or other mechanism in the unit.
The unit rejects all operations while this indicator is lit. When the condensation has disappeared, the indicator turns off and the unit accepts operations again.

■ **[SERVO] indicator**
Lights in the case of trouble with the drum servo during recording to indicate that normal recording is not being accomplished.

■ **[RF] indicator**
Lights when the video head is clogged. Head clogging is detected during playback and recording check using the RET button on the lens section. Note that it is not detected during recording.

* Should this indicator light up, clean the head using the provided head cleaning tape. For instructions on head cleaning tape, read "Precautions for Use of Head Cleaning Tape" on page 8.

■ **[Li] Lithium indicator**
Lights and indicates the necessity of replacement when the lithium battery that backs up data of the built-in time code generator is nearly exhausted. ☞ See "Inserting and Replacing Backup Lithium Batteries" on page 36.

For servicing
The protocol of VCR control is not printed in this service manual.

2-3 Left Side Section

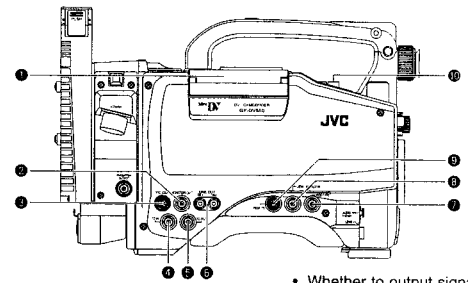

❶ Cassette cover

Pressing the EJECT switch on top of the section opens this cover so that a videocassette can be inserted or removed from the unit. The cover can be locked automatically by pushing and closing it.
- If the cassette cover is not closed, the GY-DV550 will remain inoperative.

Memo:
To prevent penetration of foreign objects into the unit, do not leave the unit with the cassette cover open.

❷ [MONITOR OUT] monitor output connector (BNC)

Connector for composite video signal output.
The following video signals are outputted.
- E-E video or playback video of VCR
- Screen mixed with characters.
- External video signal (When VTR INPUT switch is set to AUX)

Select whether to output the E-E video/playback video of VCR or character-mixed screen by CHARACTER MIX of the Camera Setup screen. ☞ See page 83

Memo:
- Select whether to output signals that include setup in the E-E video in SETUP of the Camera Setup screen. ☞ See page 83
  * Setup is not included during E-E of IEEE1394. (U MODEL)
- VITC time code is not outputted from this connector.

❸ [Y/C OUT] connector (4P)

Separate YC video signal output connector.

❹ [TC IN] connector (BNC)

Input connector for the SMPTE-standard LTC signal. The built-in time code generator can be slave-locked with the input time codes. If the user's bits should also be slave-locked, set the VCR Setup Menu item No. 403 U-BIT SLAVE to "TC&UB".
* When the TC GENE switch (⓬ on page 15) is set to REC or REGEN, or the VCR Setup Menu item No. 398 SSF MODE is set to "CUE MODE" or "MARK MODE", slave-locking will not take place.

For the slave lock of time code, see page 64.

❺ TC OUT connector (BNC)

Output connector for the LTC signal from the built-in time code generator.
The time code recorded on the tape is not output in play mode.

❻ [LINE OUT CH-1/CH-2] connector (RCA)

Output connector for audio signals.
- Outputs the input audio signal in the record and stop modes.
- Outputs the playback audio signal in the playback mode.
- Alarm sound is not output.

❼ [VIDEO OUT] Video output connector (BNC)

Connector for composite video signal output.
Camera images are constantly outputted as through images. Camera images are outputted even during external video signal input (when VTR INPUT switch ❾ on page 15 is set to AUX).
- Whether to output signals with setup can be selected in SETUP of the Camera Setup screen. ☞ See page 83 (U MODEL)

❽ [GENLOCK/AUX IN] Generationlock/Aux signal input connector

Synchronous signals (black burst signals) are inputted when the GY-DV550's camera image is synchronized with an external component. Composite video signals are inputted when recording video signals from an external device with this unit. Which video signals to input can be selected using the VTR INPUT switch on page 15.

Memo:
- Video signals from this connector are not outputted to the VTR/RM multi-pin connector ❺ on page 21.
- When the camera remote control unit is connected with setting the MODE switch ❻ on page 20 to RM, this connector will be used for synchronous signal input regardless of the VTR INPUT switch setting.
- The camera cannot be synchronized with a VCR playback signal.
- When the power is switched ON while an external sync signal is input, the screen moves in a vertical direction for a few seconds. this is not a malfunction.
- If the external sync signal is disrupted during recording, the "SYnc inh" (SYNC INHIBIT) indicator is displayed on the counter display and recording stops.
- If the external sync signal is disrupted during playback, playback of the disturbed video image continues. Start playback again after synchronization is obtained and the signal is stabilized.
- The screen will distort when inputting sync signals to both the main unit and camera remote control unit.
- This external video signal input (AUX IN) connector is an auxiliary connector. The bandwidth of Y signals will be 6.75 MHz (8 bit) regardless of the inputted signal bandwidth.

❾ [REMOTE] connector

A part of the unit's functions can be controlled externally. For connecting the local remote control unit (RM-LP55/RM-LP-57), nonlinear editing device, etc.
- When connecting the local remote control unit, Set VTR Setup menu No. 050 REMOTE SELECT to LOCAL or IEEE1394.
- When connecting a nonlinear editing device, set to IEEE1394+RS232C.

For details, please consult your JVC dealer.

Note:
If you make an error in the setting, disconnect the connector cable before performing setting again.

❿ Microphone attachment holes

For attaching the microphone holder KA-A50 (optional).
☞ See "Attaching the Microphone (optional)" on page 34.

2-4 Top Section

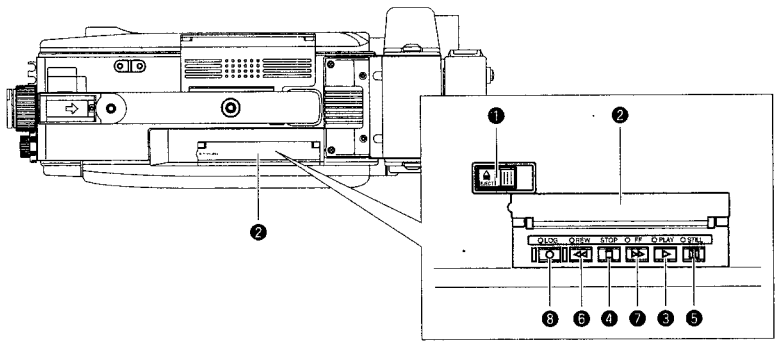

❶ [EJECT] switch
Slide to the side when inserting or ejecting the videocassette. Sliding this switch opens the cassette cover. If the switch is moved while the power is off, the cassette cover opens but it is not possible to insert or eject the cassette.

❷ Operation cover
Open this cover when operating in the playback mode. Otherwise, keep this cover closed.

❸ [PLAY] button
Press to start playback. In play mode, the unit outputs the video and audio signals of normal playback and the LED indicator above the PLAY button lights.
* If the auto tracking is active at the moment the play mode is entered, the playback video will be interfered with digital noise.

❹ [STOP] button
Press to enter stop mode. The drum keeps rotating in stop mode. However, when stop mode has continued for about 30 minutes, the unit enters the tape protect mode, in which the drum stops rotation and the tape tensioner is released. It takes more time than usual to enter the record or play mode from the tape protect mode.
* The time until the tape protect mode is initiated can be set to 3 or 30 minutes with the VCR Setup Menu item No. 307 LONG PAUSE TIME. When used in a cold environment, the setting will be 3 minutes regardless of the setting on the VCR Setup Menu. ☞ See page 75.

❺ [STILL] button
Press to enter the still picture mode during playback or in the search or stop mode.
When the still picture mode has continued for about 30 minutes, the unit automatically switches to the stop mode. (Tape protect mode)
* The time until the tape protect mode is initiated can be set to 3 minutes or 30 minutes with the VCR Setup Menu item No. 307 LONG PAUSE TIME.
When used in a cold environment, the setting will be 3 minutes regardless of the setting on the VCR Setup Menu.

❻ [REW] button
Press to rewind the tape.
- Pressing the button in stop or fast forward mode initiates the rewind mode. The LED indicator above the REW button lights in this mode.
- Pressing the button during playback, still or forward search initiates reverse search at about 10 times the normal play speed. The LED indicators above the PLAY and REW buttons light during reverse search.

❼ [FF] button
Press to fast forward tape.
- Pressing the button in stop or rewind mode initiates fast forward mode. The LED indicator above the FF button lights in this mode.
- Pressing the button during playback, still or reverse search initiates forward search at about 10 times the normal play speed. The LED indicators above the PLAY and FF buttons light during forward search.

❽ [LOG] button
- When the REW button is pressed while this button is kept pressed, the S.S.F. data stored in the unit's memory are written to the tape. The LED indicator above the LOG button lights while S.S.F. data is being written to the tape.
- When the CONTINUE button (⓰ on page 15) is pressed while this button is kept pressed in the stop mode, the tape winds to the S.S.F. data's last OUT point, after which the unit enters the record-pause mode. (Scene End Cue Up) The FF button's LED blinks during Scene End Cue Up. ☞ See "Writing S.S.F. Data to Tape" on page 69.

CAUTION:
- Only the EJECT switch and STOP button work during recording.
- If the cassette cover is open, all operations are rejected.

2-5 Adapter Section

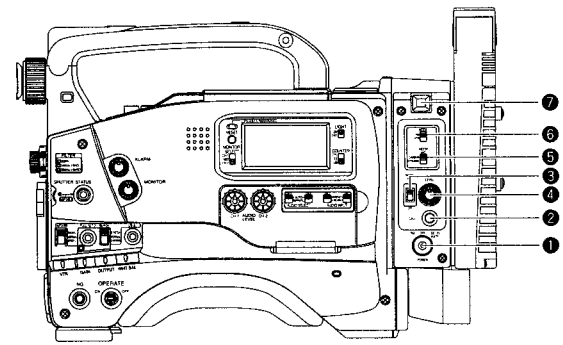

❶ [POWER] power source setting switch
The power source to this unit is selected using this switch. When turning on the power, set this switch first.
DC IN/BATT: Use this setting when supplying power from the DC INPUT connector of this unit or from the battery.
OFF : Use this setting when not supplying power to this unit.
RM : Use this setting when supplying power from the camera control unit through the VTR/RM multi-pin connector ❽.

CAUTION:
When connecting an external VCR, set this switch to DC IN/BATT and supply power from the DC INPUT connector or the battery of this unit.

❷ [CALL] button
This button is pressed when sending call signals to a camera control unit operator without using the intercom headset. When this button is held down, BACK TALLY lamp ❼ blinks and call signals are sent to the camera control unit. When releasing this button, the unit stops sending the call signals and BACK TALLY lamp ❼ turns off.

❸ [INCOM MIC] intercom microphone ON/OFF switch
Microphone ON/OFF switch for the intercom headset.
Set the switch to OFF when not using the microphone of the headset.

❹ [INTERCOM LEVEL] intercom receiver volume
Knob for controlling the intercom headset receiver volume.

❺ [INCOM MIC] intercom microphone setting switch
This switch is used to select the microphone type of the intercom headset.
CARBON : Use this setting when using a carbon-type microphone.
DYNAMIC : Use this setting when using a dynamic-type microphone.

❻ [MODE] setting switch
This switch is used to select the usage mode of the VTR/RM multi-pin connector.
RM : This setting is used when connecting with the camera control unit.
VTR : This setting is used when connecting and recording using an external VCR

❼ BACK Tally lamp
This lamp lights when the unit is in the recording mode. The lamp flashes when the unit is shifting to the recording mode. The lamp status and the lighting method can be selected in No.082 BACK TALLY MODE of the VCR Setup menu. ☞ See page 74, "BACK TALLY MODE"
The lamp blinks when the camera control unit is connected and while CALL button ❷ is held down. The lamp turns off when the CALL button is released. The lamp flashes when a call signal is received from a camera control unit operator. For details on the tally lamp display when connecting the camera remote control unit, ☞ See page 95.

2-5 Adapter Section (continued)

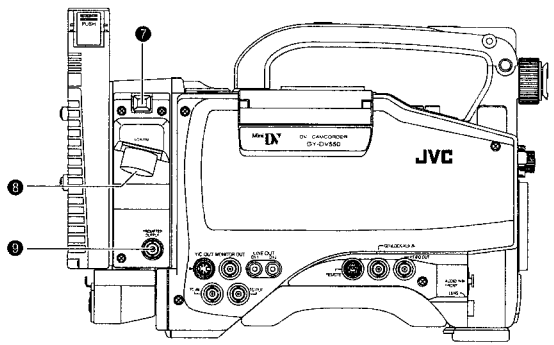

❽ [VTR/RM] VTR/RM multi-pin connector (26P)

This connector is used to connect an external VCR or camera control unit. Camera image signals are outputted from this connector.

Set MODE switch ❻ according to the connecting device.

Memo:

- Camera images of this unit are recorded on the external VCR. Compost video signals from GENLOCK/ AUX IN connector ❽ on page 18 are not recorded.
- When recording on an external VCR, set the VTR INPUT switch ❾ on page 15 to CAM and set the VTR SELECT switch ⓯ to PARA or EXT.
- Only CH1 audio can be outputted for audio signals.

❾ [PROMPTER OUTPUT] prompter output connector

Return video signals of the external VCR or signals inputted to the AUX input connector of the camera remote control unit are outputted through VTR/RM multi-pin connector ❽.

2-6 Rear Section

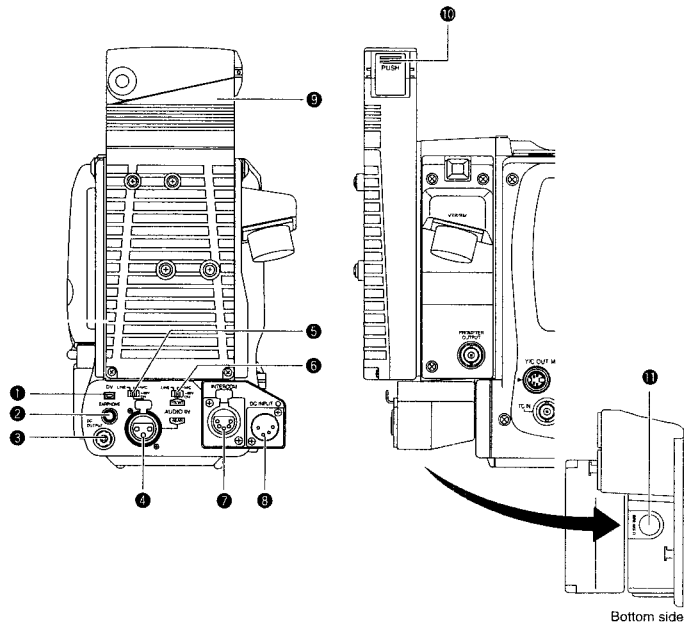

Bottom side

❶ [DV] connector

Using a DV cable (optional), a digital video component with DV connector can be connected here.

This connector is used for output of the DV signal or to input the VCR control signal from the digital video component with DV connector.

- To remote control the VCR with a VCR control signal from this connector, set the VCR Setup Menu item No. 050 REMOTE SELECT to "IEEE1394".

❷ [EARPHONE] earphone jack

This is a mini-jack for connecting an audio monitoring earphone. Plug in an earphone or headphone with a 3.5 mm diameter plug. Audio is outputted in monaural.

The earphone can also be used to monitor alarm tones depending on situations.

The sound from the monitoring loudspeaker is interrupted when an earphone is connected here.

❸ [DC OUTPUT] connector

Power output connector to a wireless microphone transmitter, etc. The supply voltage is identical to the voltage supplied to the unit (DC 12V max. 0.1 A).

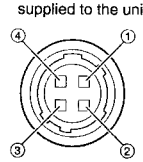

(Surface profile)

No.	Signal
①	GND
②	—
③	—
④	DC +12V (power through)

❹ [AUDIO IN REAR] audio input rear connector (XLR 3-pin)

Connect the external audio equipment or microphone to this connector. Set the AUDIO IN REAR LINE/MIC select switch ❺ according to the connected equipment.

To record the audio of this connector, set the CH-1 AUDIO INPUT switch ❼ or the CH-2 AUDIO INPUT switch ❽ on page 14 to "REAR".

(AUDIO IN connector)

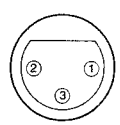

No.	Signal
①	GND
②	HOT
③	COLD

❺ [AUDIO IN REAR LINE/MIC] AUDIO IN REAR select switch

Selects the audio signal input to the ❹ AUDIO IN REAR connector.

LINE : Set to this position when connected to audio equipment, etc. The reference input level is +4 dBs.

MIC : Set to this position when the microphone is connected. The reference input level is -60 dBs.

MIC +48V ON:

Set to this position when the microphone requiring +48 V power supply (phantom microphone, etc.) is connected.

This connector supplies +48 V DC current.

2-6 Rear Section (Cont'd)

⓰ [AUDIO IN FRONT LINE/MIC] AUDIO IN FRONT select switch

Selects the audio signal input to the AUDIO IN FRONT connector ⓲ on page 10.

LINE : Set to this position when connected to audio equipment, etc. The reference input level is +4 dBs.

MIC : Set to this position when the microphone is connected. The reference input level is -60 dBs.

MIC +48V ON:
Set to this position when a microphone requiring +48 V power supply (phantom microphone, etc.) is connected. This connector supplies +48 V DC current.
Use this setting when using the provided microphone.

CAUTION:

When connecting a component that does not require +48 V power supply, make sure that the switch is not set to this position before the connection is made.

⓱ [INTERCOM] intercom input terminal (XLR 5-pin)

Input terminal for the intercom headset.
Connect the JVC Intercom KA-310 to this terminal.
This terminal is enabled when the VTR/RM connector (26-pin) on page 21 is connected to the camera control unit. (Enabled when the MODE switch ⓯ on page 20 is set to RM.)

⓲ [DC INPUT] connector (XLR 4-pin)

Power input connector for 12 V DC. Connect with the AA-P250 optional AC power adapter. When a cable is connected here, the power supply from the battery pack is interrupted and the source is switched to the power supplied through this connector.
When supplying power to the unit from this connector or battery, set the POWER switch ❶ on page 20 to DC IN/BATT..

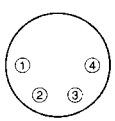

No.	Signal
①	GND
②	—
③	—
④	+12V

⓳ Battery holder

Mount a Flat Shape type battery pack here.
When supplying power to the unit from DC INPUT connector ⓲ or battery- set the POWER switch ❶ on page 20 to DC IN/BATT.
☞ See "Attaching a Flat Shape Type Battery Pack" on page 38.

⓴ Battery holder lock release knob

This knob is used to open the battery case cover. Press the knob to open the cover.

⓫ [BREAKER]

The breaker trips when the power consumption exceeds the capacity.
If the breaker trips, confirm that the power consumption does not exceed the wattage rating. Then press BREAKER before turning the power ON again to put the camera in the operating status.
If the unit still does not work normally, please consult the person in charge of professional video equipment at your nearest JVC-authorized service agent.

For servicing
See the service manual page 1-1,
"1.1 RESETING THE POWER CIRCUIT PROTECTION BREAKER".

2-7 Counter Display Contents

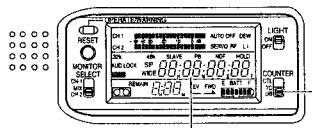

Counter display

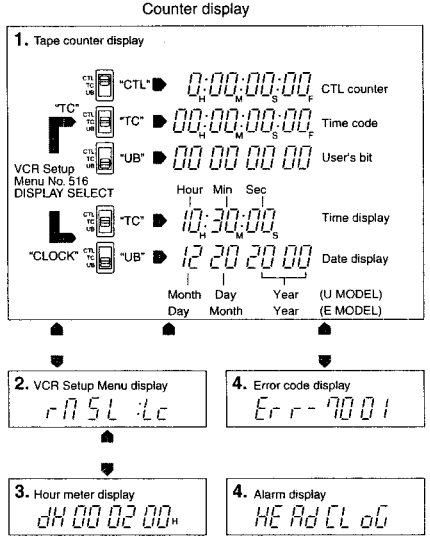

Remaining Tape Time Display

This display shows the remaining tape time (minutes/seconds) in record and play modes.

• Example: 30 minutes of remaining tape.

REMAIN 0H:30M

• This indicator blinks when remaining tape time is equivalent to less than 2 minutes.
* An alarm sounds as a warning when remaining tape time is equivalent to less than 2 minutes in the record mode

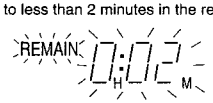

• The following display appears when no videocassette is loaded or during the calculation of remaining tape that takes place immediately after a videocassette is inserted.

REMAIN --:--
H M

The counter display shows the following 4 types of information.

1. Tape counter display
The counter display usually functions as a tape counter (hour, minute, second, frame). It can be switched to a CTL counter, time code or user's bit display by using the COUNTER switch. (When the VCR Setup Menu item No. 516 DISPLAY SELECT is set to "TC".)

• **CTL counter**: Time between -9 hr. 59 min. 59 sec. 29 frames and 9 hr. 59 min. 59 sec. 29 (U)/24 (E) frames can be displayed.
* CTL counter indication may also corrupt at playback of segment which time code signal is not continuously recorded.

• **Time code** : Time between 0 hour and 23 hr. 59 min. 59 sec. 29 (U)/24 (E) frames can be displayed.

• **User's bit** : Hexadecimal number from 0 to F is displayed in 8 digits.

When the VCR Setup Menu item No. 516 DISPLAY SELECT is set to "CLOCK", the date and time are displayed. Set the COUNTER switch to TC or UB.
TC: Time (Hour, Min., Sec.) is displayed.
UB: Date (Month, Day, Year) is displayed. (U MODEL)
UB: Date (Day, Month, Year) is displayed. (E MODEL)

• Press the MENU button to switch to the VCR Setup Menu setting display.

2. VCR Setup Menu setting display
This display is used when setting the setup menus. After setting of the setup menus, the tape counter display returns. For details, see "DISPLAYING AND SETTING VCR SETUP MENUS" on page 73.

3. Hour meter display
The hour meter is displayed by selecting the HM group from the VCR Setup Menu.
The hour meter data refers to the accumulated head drum running time.

4. Error code/Alarm display
The error code or alarm indicator is displayed automatically in case an abnormal condition occurs with the unit.
☞ See "TROUBLES WITH ERROR CODE OUTPUTS" on page 100.
☞ See "ALARM INDICATIONS" on page 96.

Remaining Battery Power Display

The 7-dot segment bar display shows the remaining battery power. The lighted segment bars decrease as the remaining battery power decreases.

• To display the remaining battery power accurately, set the VCR Setup Menu item No. 396 BATTERY TYPE according to the type of the battery pack in use.

E BATT F — All segment bars light when a fully charged battery pack is attached.

E BATT — The last 2 segment bars and "BATT" start to blink when the battery is nearly exhausted. Replace with a fully charged battery pack.

E BATT — When the battery capacity has run out, "E" and "BATT" blink and the unit stops operation automatically.

2-8 Lens (optional)

[S14 x 7.3B12]

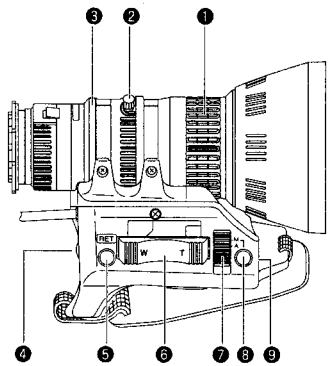

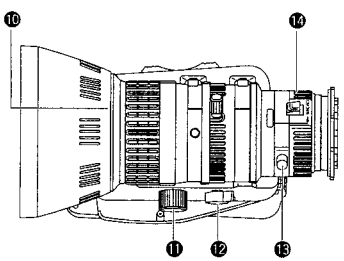

❶ FOCUS ring
Manual focus ring.

❷ ZOOM lever/ring
This is the manual zoom ring equipped with a zoom lever. To adjust the zoom manually, turn the zoom mode knob ⓬ to position "M".

❸ IRIS ring
Manual iris ring. To activate the auto iris feature, set the Iris Mode switch ❼ to A.

❹ [VTR] Trigger button
To start/stop shooting.

❺ [RET] return video button
- When GY-DV550 is in the record-pause or stop mode, press this button to check the immediately preceding image recorded.
- When the camera control unit is connected, the return video signals can be monitored on the viewfinder while pushing this button.
- When an external VCR is connected, the return video and return audio signals can be monitored while pushing this button.
  (When VTR SELECT switch is set to EXT.)

❻ ZOOM servo control lever
To operate the servo zoom feature with this lever, set the ZOOM knob ⓬ to S.
- Pressing the W section of this lever increases the angle of the lens for a wider shooting angle.
- Pressing the T section of this lever narrows the lens angle perspective for telephoto shots.
- Pushing harder changes the speed of the zoom.

❼ IRIS mode switch
A: Activates the auto iris feature.
M: Allows manual iris control.

❽ Momentary auto iris button
When the IRIS MODE switch ❼ is at "M", pushing this button activates the Auto Iris Function while it is held down only.

❾ [S] IRIS speed adjusting control
For adjusting the iris operation speed.

> **Memo:**
> If the speed becomes too fast, hunting may occur. To avoid the phenomena described above, perform adjustment again.

❿ FILTER thread
Protect the lens with a clear filter or UV filter by screwing the filter onto the thread inside the lens hood from the front. Other filters can be used for various effects.

> **CAUTION:**
> The filter thread section rotates, so pay attention when mounting a polarizing filter.

⓫ ZOOM servo connector
Connect an optional zoom servo unit here.

⓬ ZOOM mode knob
S: Servo zoom mode. Allows operation by the zoom servo control lever ❻.
M: Manual zoom mode. Allows zoom control by the zoom lever/ring ❷.

⓭ BACK FOCUS ring/fixing screw
For back focus adjustment only. Secure with the screw knob after adjustment.
☞ See "Back Focus Adjustment" on page 46.

⓮ Macro focusing ring (for close-up shooting)
By rotating this ring in the direction of the arrow, close-up shooting of very small objects becomes possible.
Normal focus adjustment and zooming are not available in the macro mode.
To shoot images in the macro mode, set the focus ring ❶ to the infinite position and the zoom ring ❷ to the maximum wide-angle position. To adjust the focus of the macro image, rotate this ring in the direction of the arrow until the object is focused.

> **CAUTION:**
> - The back-focus knob is located close to the macro ring, be careful not to mistake the back-focus knob for the macro ring.
> - After the required operation, be sure to return the macro focusing ring to the normal position.

☞ See "Attaching the Zoom Lens (optional)" on page 33.
☞ See "Back Focus Adjustment" on page 46.

2-9 1.5-Inch Viewfinder (optional)

[VF-P115B]

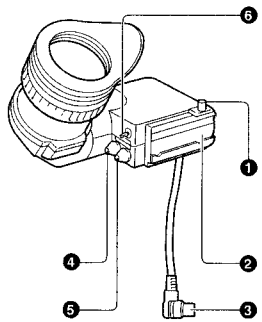

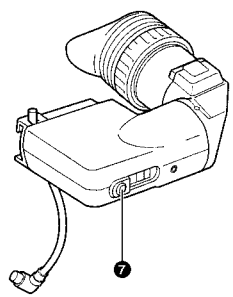

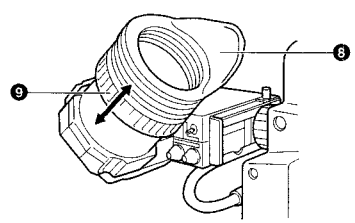

❶ Stopper screw
This screw prevents the viewfinder from coming off the camera.

❷ Mounting guide
To attach on the camera.

❸ Connector
Connect to the camera.

❹ [CONT] contrast adjustment
To adjust the contours of the viewfinder image.

❺ [BRIGHT] brightness adjustment
To adjust the brightness of the viewfinder.

❻ [TALLY] switch
Set this switch to OFF to prevent the tally light ❼ from turning on and informing people that they are being recorded. However, the REC indicator lamp in the eyepiece will not turn off.

❼ Tally light
Lights when recording is in progress. To prevent this light from coming on, set the tally switch ❻ to "OFF".

❽ Eyepiece
Ensures that ambient light does not reach the viewfinder screen or falls into the eye of the cameraman.
The eyepiece can be opened to allow direct observation of the viewfinder screen.

❾ Eyepiece focusing ring
Loosen this ring to move the eyepiece back or forth to adjust the diopter.

2-10 Indications in Viewfinder

WARNING LED INDICATORS INSIDE THE VIEWFINDER

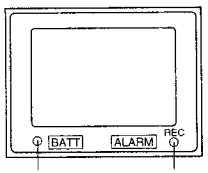

BATT Lamp REC/ALARM Lamp

The viewfinder has two LED indicators below the screen. These LEDs light or blink to indicate the present status of the camera or the VCR.

- **[BATT] battery lamp**
  This lights red when the battery voltage becomes too low for operating the camera.
- **REC/ALARM lamp**
  The internal VCR status is displayed when the VTR SELECT switch is set to INT or PARA.
  This lights or blinks green under the following circumstances.
  Steady green : During recording.
  Blinks green : • While the GY-DV550 switches from record-pause to recording.
  • Immediately before the tape is running out or when it has run out.
  • When an error occurs in the GY-DV550.
  The external VCR status is displayed when VTR SELECT switch is set to EXT.
  Steady green : During recording.
  Blinks green : • Immediately before the tape is running out.
  • When an error occurs in the VCR.

VIEWFINDER SCREEN DISPLAY

The following indications are displayed on the viewfinder screen. (However, this information is not displayed while the VCR section is playing back a tape.)

- Status screens (screens for use in checking the current camera settings)
- Alarm message display
- Time date display
- Safety zone display
- Setting screen (screen for use in the camera and VCR setup)
- Auto white balance display
- Shutter speed display

■ Status Screens

Press the STATUS button during normal screen display to show one of the status screens in the viewfinder. One of the three status screens will be displayed every time the button is pressed. (Status 0, 1, 2)

The status 2 screen will not appear during external video signal input (when the VTR INPUT switch is set to AUX).

In addition, AUX will appear on the upper right of status screen 0 and 1 and camera setting related display will not be made.

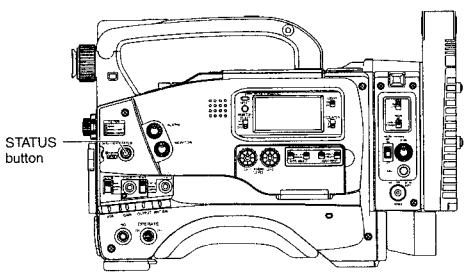

• VTR INPUT switch: During CAM setting

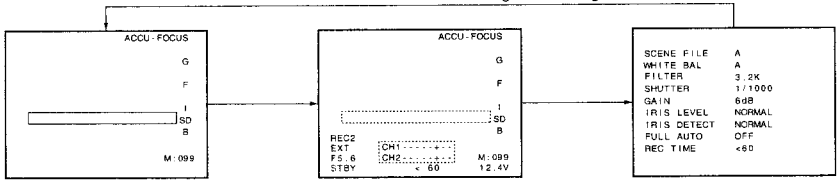

Status 0 Status 1 Status 2

• VTR INPUT switch: During AUX setting

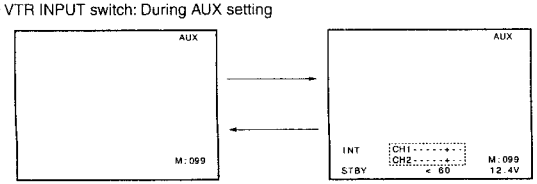

Status 0 Status 1

2-10 Indications in Viewfinder (Cont'd)

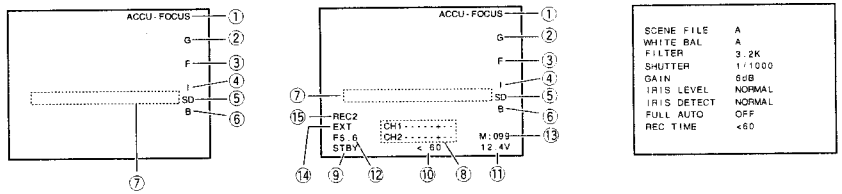

Status 0 Status 1 Status 2

- **Status 0**

Display Position	Display	Function
①	ACCU-FOCUS	Blinks during the ACCU-FOCUS operation.
	SKIN AREA	Blinks while the skin tone detail color area is displayed.
	S	Displayed when the SHUTTER or V-SCAN is ON.
	FAS	Displayed when the Full Auto Shooting is ON.
	ALC	Displayed when the ALC alone is ON.
	IEEE 1394	Displayed when VCR Setup menu No.126 VIDEO INPUT is set to IEEE1394.
	AUX	Displayed during external video signal input.
②	G	Displayed in other modes than 0 dB, LOLUX and ALC.
	L	Displayed during LOLUX operation.
③	F	Displayed when FAW alone is ON.
④	I	Displayed when IRIS BACK LIGHT or IRIS SPOT LIGHT is selected.
⑤	SD	Displayed while the Skin Detail function is in operation.
⑥	B	Displayed when BLACK STRETCH or BLACK COMPRESSION is selected.
⑦	Event display	See the table below.

Not displayed during external video signal input (when the VCR INPUT switch is set to AUX).

⑦ Event display ... Not displayed during external video signal input or IEEE1394 input.

Event is displayed in the viewfinder for only about 2 seconds when any of the following switches is operated.

Switch	Event Display Contents	
ZEBRA	ZEBRA	ON, OFF
BLACK	BLACK	STRETCH, NORMAL, COMPRESS
GAIN	GAIN	–3 dB, 0 dB, 3 dB, 6 dB, 9 dB, 12 dB, 18 dB, ALC
WHT. BAL	WHITE BAL	A, B, PRESET, FAW
FULL AUTO	FULL AUTO	ON, OFF
AUTO IRIS	IRIS	BACK L, NORMAL, SPOT L
LOLUX	LOLUX	ON, OFF
FILTER knob	FILTER	3.2K, 5.6K+1/8ND, 5.6K+1/64ND
VTR	VTR	STBY, SAVE
AUTO KNEE	AUTO KNEE	ON, OFF

2-10 Indications in Viewfinder (Cont'd)

• Status 1

In addition to the information on the Status 0 screen, this screen displays audio indicators and information on remaining tape, voltage and lens F-number (or FILTER POSITION).

Display position	Display	Function
⑧	(Example) CH1- - - - + - - CH2- - - - + - -	Shows the input level of the audio input channel. Display ON/OFF can be selected using the VF DISPLAY menu screen. ☞ See "AUDIO DISPLAY" on page 78.
⑨	STBY SAVE STOP REC FF REW EJECT	VCR in standby mode VCR in save mode VCR in stop mode VCR in record mode VCR in fast-forward mode VCR in rewind mode VCR in eject mode
⑩	(Example) < 60 (Example) 12: 34: 56: 20	Remaining tape indication (displayed in 1-minute steps) When the tape is used for a long time, the remaining tape may not be indicated accurately. At the beginning of the tape, in particular, the indication may show smaller value than the actual one. Time code display Time code display is available when the "REC TIME" item on the VF DISPLAY menu screen is set to TIME CODE. ☞ See "REC TIME" on page 78.
⑪	(Example) 12.4V	Voltage indication (displayed in 0.1 V steps) The indicator flashes when the battery is low. The indicator will not appear when the camera remote control unit is connected.
⑫	F-number: OPEN, F2, F2.8, F4, F5.6, F8, F11, F16, CLOSE FILTER: FIL1, FIL2, FIL3	The F-number of the connected lens or the filter position of the unit is displayed. Whether to display the F-number or filter position, or no display is selected in F. NO/FILTER of the VF DISPLAY screen. • The F-number may not be displayed depending on the lens type or when the lens is removed. ☞ See page 78 Not displayed during external video signal input or IEEE1394 input.
⑬	(Example) M: 099	In the Super Scene Finder (S.S.F.) mode, the number of memorized scenes is shown. M: In MARK mode C : In CUE mode Number: Number of memorized scenes
⑭	EXT, INT, PARA	Displays whether the main unit is used for recording or the external VCR connected to the VTR/RM multi-pin connector. The displays will differ depending on the VTR SELECT switch setting. INT is constantly displayed during external video input or IEEE1394 input. INT is constantly displayed when the VTR/RM switch is set to RM.
⑮	REC2	The display will light during external VCR recording. The display flashes when there is a warning on the external VCR. The display will not appear when the VTR/RM switch is set to RM.

Note:
When the RS-232C cable is connected, the VCR operation mode may not be displayed correctly.

• Status 2 ... Not displayed during external video signal input or IEEE1394 input.

This screen displays the camera setup statuses.
Event display is not available while this screen is displayed.

Indication	Indication Contents
SCENE FILE	A, B, OFF
WHITE BAL	A, B, PRESET, FAW, MANUAL (When remote control unit w/manual balance is connected.)
FILTER	3.2K, 5.6K+1/8ND, 5.6K+1/64ND
SHUTTER	OFF, 1/100 (U)/1/120(E), 1/250, 1/500, 1/1000, 1/2000, 1/60.1 (U)/1/50.1 (E) to 1/2084.6 (U)/ 1/2067.8 (E) (in VARIABLE mode), EEI (in ALC mode)
GAIN	-3dB, 0dB, 3dB, 6dB, 9dB, 12dB, 18dB, LOLUX, ALC
IRIS LEVEL	NORMAL, BACK L, SPOT L
FULL AUTO	ON, OFF
REC TIME	Remaining tape time or time code.

2-10 Indications in Viewfinder (Cont'd)

■ Alarm Message Display

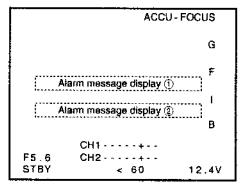

The following alarm messages are displayed on the status 0 and status 1 screens.
Event display is not made when an alarm message is displayed in alarm message display ②.

	Indication	Contents
①	CLOSE CASSETTE COVER	The cassette cover is not closed.
	VTR WARNING [HEAD]	Head clogging
	VTR WARNING [SERVO]	Servo error
	VTR WARNING [DEW]	Condensation
	VTR WARNING [HARD]	Hardware error
	VTR WARNING [STOP]	Operation stopped
	VTR WARNING [REW]	Rewinding abnormality
②	TAPE NEAR END	Remaining tape time is less than about 2 minutes in the record mode
	TAPE END	Tape end reached
		REC INHIBIT An unrecordable videocassette (the switch on the back of the cassette is set to SAVE) is inserted.
	NO TAPE	VTR trigger is pressed with no tape loaded.

■ Time/Date Display

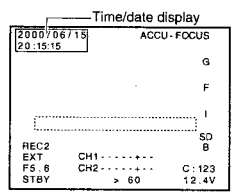

When setting DISPLAY item of the TIME DATE menu screen to ON, the time and date will appear as shown in the diagram on the left. The time and date are recorded on tape during recording as well.
For the display formats of the time and date, ☞ see page 84.
For setting the time and date, see page 43.

2-10 Indication in Viewfinder (Cont'd)

■ Safety Zone

Two types of safety zone items can be displayed in the viewfinder. Select the required one with the SAFETY ZONE item on the VF DISPLAY menu screen. The CENTER MARK item can be used to select whether the safety zone center mark indicator should be displayed or not (ON/OFF).

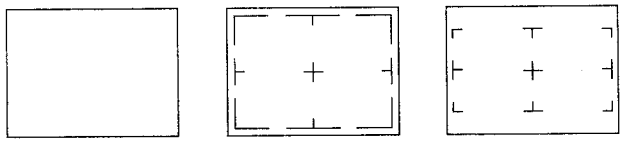

OFF NORMAL 16:9

■ Setting the Screen Display

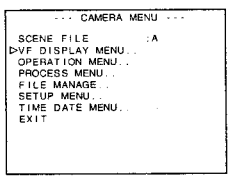

Screen used for making various settings of the camera and VCR.
☞ See "Camera Menu Screen Flow" on page 76.
☞ See "VCR Setup Menu" on page 72.

■ Auto White Balance Display

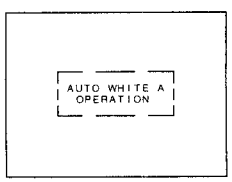

This screen appears during the auto white balance adjustment operation to display various data.
☞ See "White Balance Adjustment" on page 47.

■ Shutter Speed Display

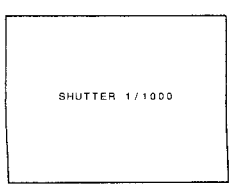

When the SHUTTER dial is pressed, a shutter speed is displayed (for approx. 5 sec.). In addition, whenever the shutter speed is altered by using the SHUTTER dial, the shutter speed is displayed. While this display is shown, other displays disappear.
☞ See "SHUTTER dial" on page 12.

3. BASIC SYSTEM CONNECTIONS AND ADJUSTMENTS

3-1 Basic System

For information on connection with the individual attachments, refer to the page explaining the respective connection methods.

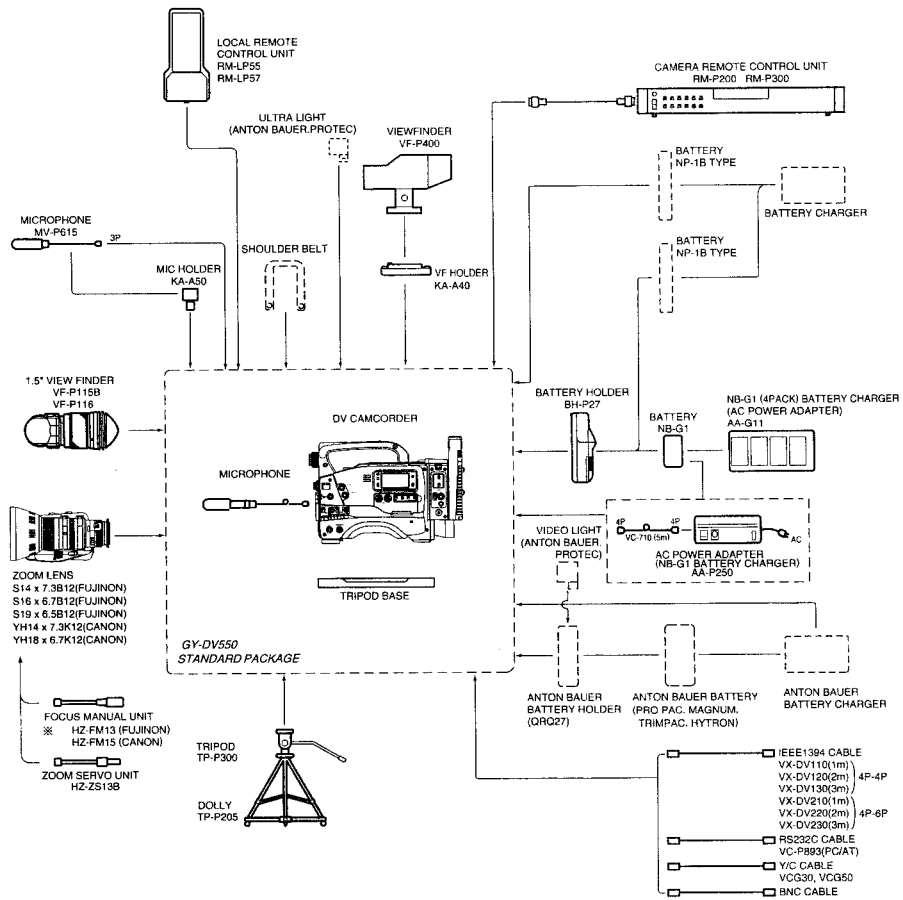

※HZ-FM13 cannot be used with S14X7.3B12/U.
Please use the Focus Manual Unit (FMM-8, CHF-3, CFC-12-990) manufactured by Fujinon.

3-2 Attaching the Zoom Lens (optional)

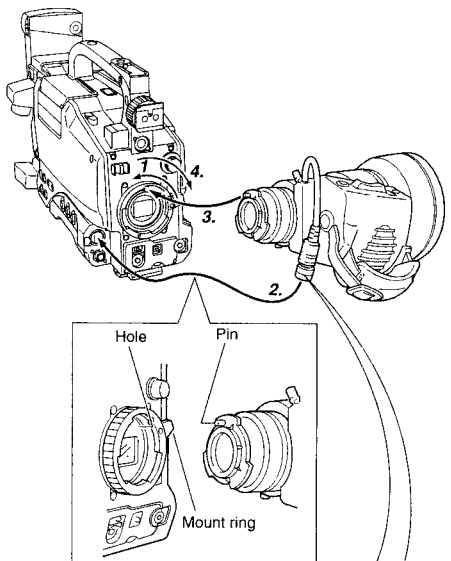

When unplugging the cable connector, first remove the lens itself. Then grasp this portion and pull straight out.

1. Loosen the mount ring.
2. Connect the cable connector.
3. Attach the lens with its pin aligned with the hole in the mount.
4. Tighten the mount ring.

CAUTION:

Be sure to tighten the mount ring completely. Incomplete tightening may result in the lens dropping off or disturbed back focus.

3-3 Attaching the Viewfinder (optional)

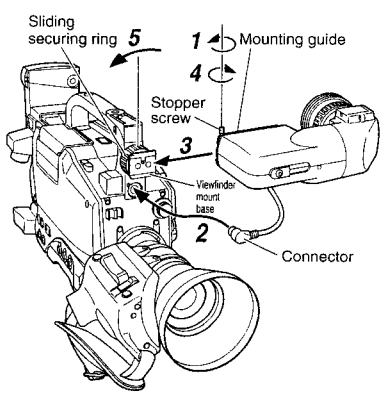

1. Loosen the stopper screw on the viewfinder.
2. Connect the connector.
3. Align the mounting guide with the camera's viewfinder mount base and attach the viewfinder.
4. Tighten the stopper screw.
5. Tighten the sliding securing ring.

* To detach the viewfinder, reverse the mounting procedure.

3-4 Attaching the Microphone (provided)

Provided Microphone

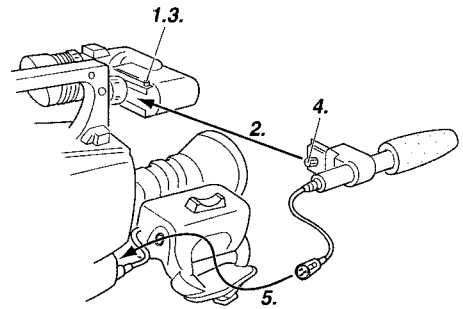

Connecting the provided microphone to the viewfinder.
The provided microphone is a phantom microphone.

1. Loosen the stopper screw on the viewfinder.
2. Attach the microphone to the attachment guide on the viewfinder as illustrated.
3. Confirm that there is no gap between the microphone and the viewfinder, and then tighten the stopper screw.
4. Tighten the microphone screw. The microphone should be firmly attached.
5. Connect the cable from the microphone to the AUDIO IN FRONT connector on the front section of the camera.
6. Secure the microphone cable using the cable clamp located on the front of the camera.

CAUTION:

When this microphone is attached, the range that the viewfinder can be moved to the left will be reduced. Please purchase a separately sold microphone if you prefer to observe through the viewfinder using your left eye.

3-5 Attaching the Microphone (optional)

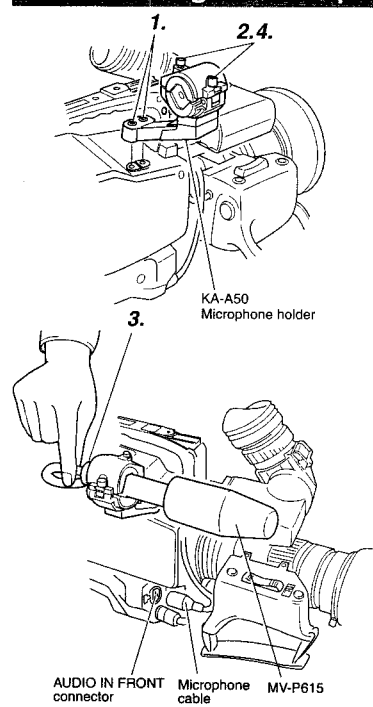

With the optional KA-A50 microphone holder, the optional microphones MV-P615 (Phantom microphone) can be used.

■ Attaching the Microphone with KA-A50

1. Secure the microphone holder with 2 screws.
2. Turn the small knob located on the outer side of the microphone holder anticlockwise to loosen it, and loosen the large knob located on the inner side in the same way. Rotate the large knob fully anticlockwise to open the holder.
3. Attach the microphone to the microphone holder so that the microphone does not interfere with the cassette cover.
4. Set the microphone holder so that the height is level, and tighten the inside and outside knobs to secure the microphone.
5. Connect the microphone cable to the AUDIO IN FRONT connector.
6. Secure the microphone cable using the cable clamp located on the front of the camera.
7. Make sure to perform the correct settings for use of a phantom microphone.

Note:

- When the light mounted on the camera is used at the same time, if the microphone in use has a long sound collecting section (ultra-directional type, etc.), the microphone's shadow may influence the image.

3-6 Attaching the Tripod Base (provided)

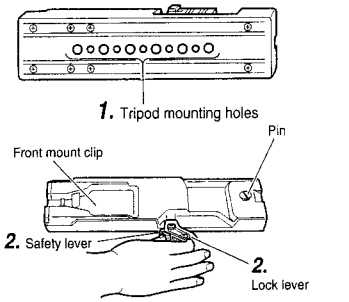

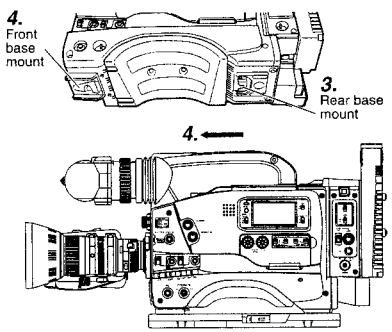

Use the provided tripod base to place the camera on a tripod.

1. Attach the tripod base on the tripod by using the hole that balances the unit most optimally.
2. While pushing the safety lever, pull the lock lever toward the front until the front mount clip clicks into place.
3. Place the unit on the tripod base by aligning the rear base mount of the unit with the pin on the tripod base.
4. Push the unit from the upward direction and slide it toward the front so that the front base mount of the unit is locked by the front mount clip of the tripod base as it clicks into place.

CAUTION:
- The front base mount may be locked while the pin of the tripod base is not inserted into the hole on the rear base mount of the unit. Therefore, after mounting, make sure that these parts are engaged properly.
- When moving the unit mounted on a tripod, any impact or vibration should be avoided as this may cause the unit to become detached and to drop from the tripod. Be sure to remove the unit from the tripod before transporting it.
- The tripod base (KA-510) cannot be mounted.

3-7 Attaching the 4-inch Viewfinder (Optional)

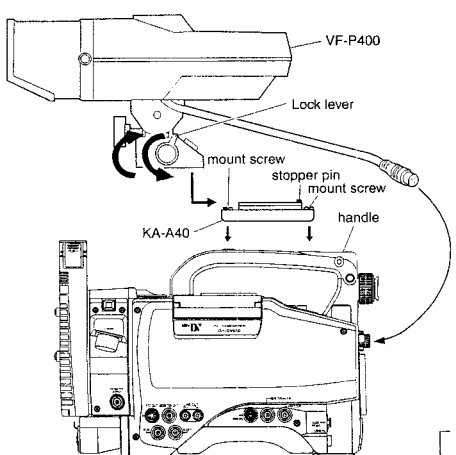

Use the optional viewfinder holder (KA-A40) to mount the 4-inch viewfinder (VF-P400) on the unit.

1. Mount the viewfinder holder on the handle section of the unit.
   * Mount it so that the stopper pin of the viewfinder holder comes to face the front of the unit.
2. Fix the viewfinder holder securely using two screws.

CAUTION:
Unless the screws are securely fixed, the viewfinder may drop. Exercise maximum caution.

3. Loosen the lock lever of the 4-inch viewfinder, and slide the viewfinder forward along the viewfinder holder guide.
4. Turn clockwise the lock lever of the 4-inch viewfinder and fix it.
5. Connect the viewfinder cable connector to the viewfinder connector of the unit.

For servicing
To use KA-510, see the service manual page 1-20, "1.12.8 Trpod base".

3-8 Inserting and Replacing Backup Lithium Batteries

The GY-DV550 uses a lithium battery for backup of the time code data and time date data. Install the provided lithium battery before actually using the unit.

- **Lithium battery: CR2032**

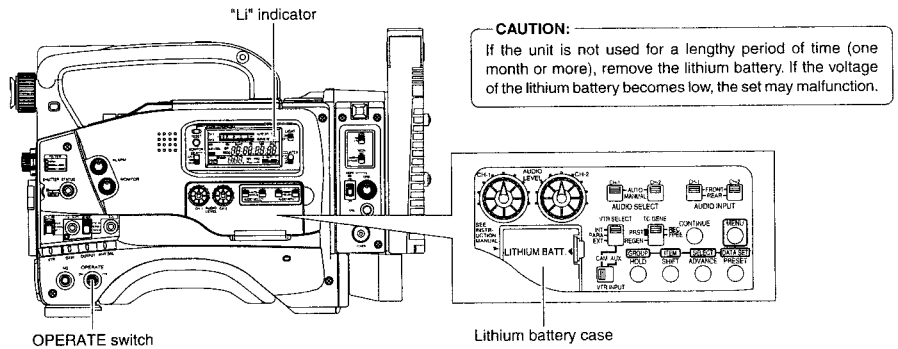

CAUTION:
If the unit is not used for a lengthy period of time (one month or more), remove the lithium battery. If the voltage of the lithium battery becomes low, the set may malfunction.

When the lithium battery is not in place or the battery is exhausted and requires a replacement, the "Li" indicator in the LCD display will light up.

Replace lithium batteries with the OPERATE switch set to ON. Doing it with the OPERATE switch set to OFF will cause the loss of backup data.

■ How to Install the Lithium Battery

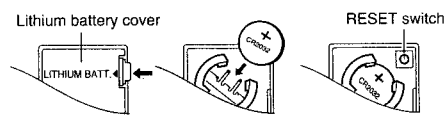

1. Push the lithium battery cover in the direction of the arrow as illustrated and remove the cover.
2. Slide the battery into place with its ⊕ marked surface facing upward.
3. Return the lithium battery cover to its original position in the unit.

Note:
Do not press the RESET switch when installing or removing the lithium battery.

■ How to Remove Lithium Batteries

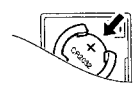

■ The lithium battery is easily removed if you press at the edge of the lithium battery at the place indicated in the illustration on the left and then pull the battery out.

4. POWER SUPPLY

The GY-DV550 is operable with AC power supply or battery pack.

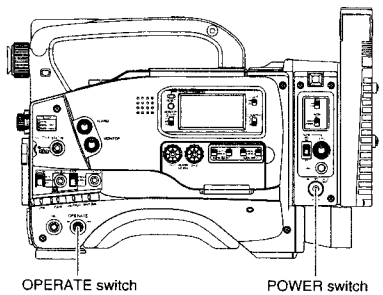

To operate the unit using AC power supply or battery, set the POWER switch to DC IN/BATT.

CAUTION:
When supplying power to the unit from cameral control unit through the VTR/RM multi-pin connector, set the POWER switch to RM.
It is not possible to supply power to the main unit from an external VCR through the VTR/RM multi-pin connector.

4-1 AC Operation

Use the JVC AA-P250 AC power adapter (max. rated output 12.5 V DC, 3.5 A) as the AC power supply.

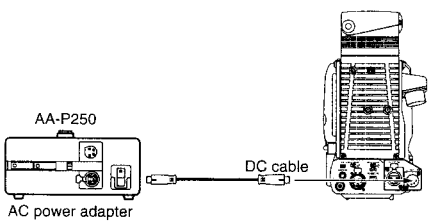

Do not use any power source with large fluctuations in the power source voltage, or power sources generating noise, such as ripples.

1. After making sure that the power switches of the GY-DV550 and of the AA-P250 are set to OFF, connect the DC cable from the AA-P250 to the DC INPUT connector of the GY-DV550 as shown in the illustration.
2. When the AA-P250 is used, set the CHARGE/CAMERA switch to CAMERA.
3. Set the POWER switch of the main unit to DC IN/BATT, and set the OPERATE switch to ON.
   * For details, read the instruction manual of the AA-P250.

Precautions for Connection with the AC POWER ADAPTER(AA-P250)
Always use the DC cable equipped with a ferrite core and supplied with the AA-P250.
The DC cable VC-710(5m) can not be used.
If the cable is not equipped with a ferrite core, please contact your JVC dealer.

Note:
Do not remove or connect the DC cable while recording is being performed.

4-2 Battery Pack Operation

The GY-DV550 can be operated with the following battery packs.

- **Flat shape type battery pack**
- **Anton-Bauer battery pack**
  - Propack 13/14 Series
  - Trimpack 13/14 Series
  - Magnum 13/14 Series
  - Compack 13/14 Series

* An Anton-Bauer battery pack cannot be connected directly to the GY-DV550. It is necessary to mount the optional battery holder.
Battery holder: Anton-Bauer QRQ27
For details on how to mount the battery holder, see page 39.

- When the DC cable is connected to the DC INPUT connector, the power supply from the battery pack is interrupted and the power starts to be supplied through the DC INPUT connector.
- Do not connect or disconnect the DC cable while operating with a battery pack.
  The following symptoms may occur if the DC cable is connected or disconnected while operating with a battery pack.
  • The power is cut off for a moment when the DC cable is disconnected.
  • Noise to the video and audio signals occurs. Audio signal are muted.
- When operation is continued with DC input after the battery pack capacity has been used up, set the OPERATE switch to OFF after the DC power is applied. Then switch ON again.
- If the GY-DV550 is left with the battery pack attached, a small amount of power is consumed even if the OPERATE switch on the GY-DV550 is set to OFF. Remove the battery pack when the GY-DV550 is not going to be used.

4-2 Battery Pack Operation (Cont'd)

ATTACHING A FLAT SHAPE TYPE BATTERY PACK

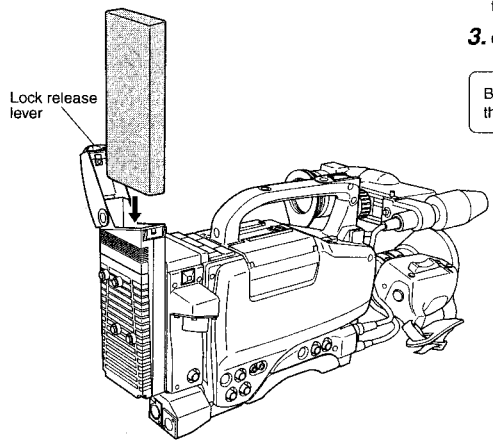

1. Open the battery case cover while pushing the lock release lever.
2. Insert the battery pack into the battery case with its electrodes facing the unit.
3. Close the battery case cover.

Be sure to set the POWER switch to OFF before replacing the battery pack.

4-2 Battery Pack Operation (Cont'd)

USING AN ANTON-BAUER BATTERY PACK

To use an Anton-Bauer battery pack (Propack 13/14, Trimpack 13/14, Magnum 13/14, Compack 13/14 Series), it is necessary to detach the battery case from the GY-DV550 and replace it with the Anton-Bauer battery holder. Use the following battery holder.
• Battery holder: Anton-Bauer QRIQ27

Detaching the Battery Case From the GY-DV550 and Attaching The Anton-Bauer Battery

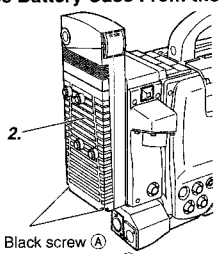

1. Remove the two black screws Ⓐ on the battery case.

2. Remove the lower half of the battery case cover in the downward direction.

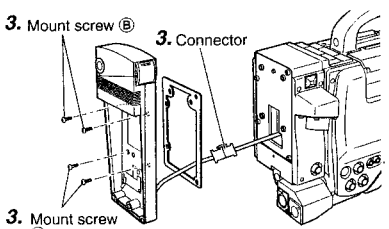

3. To remove the battery case, remove the four screws Ⓑ fixing the battery case and the connector connecting the battery case to this unit.

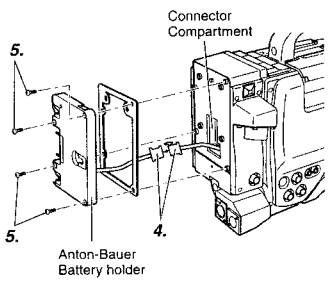

4. Connect the connectors protruding from the GY-DV550 with the connectors on the battery holder.
* Following connection of the connectors, insert them into the connector compartment.

5. Secure the battery holder to the GY-DV550 with the four mount screws provided with the battery holder.

* Take care not to pinch the wires. This could result in damage.

Attaching and Detaching an Anton-Bauer Battery Pack

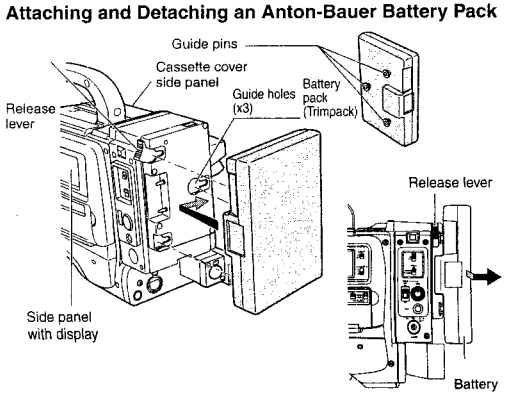

Attaching the Battery Pack

1. Align the 3 guide pins of the battery pack with the guide holes on the battery holder, and push straight to insert the battery pack.
The battery cannot be attached properly if the guide pins are not inserted straight.

2. Slide the battery pack toward the side panel where the cassette cover is located until it clicks. Now the battery pack has been attached.

Detaching the Battery Pack

■ While pushing and holding the release lever, slide the battery pack toward the side panel where the LCD display is located, then pull the battery pack outward to remove.

4-2 Battery Pack Operation (Cont'd)

REMAINING BATTERY POWER DISPLAY

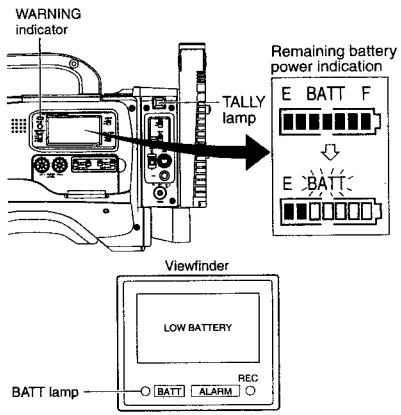

To display the remaining battery power accurately, set the VCR Setup Menu item No. 396 BATTERY TYPE according to the type of the battery pack in use.
☞ See page 75.

The status of the remaining battery power can be checked by the remaining battery power indication.
☞ See page 24.

■ When the remaining battery power is nearly exhausted, the following warning messages will appear. In this case, replace with a fully charged battery as soon as possible.
- Remaining battery power indication:
  Segment bar and "BATT" indicator start to blink
- WARNING indicator and TALLY lamp blink
- Viewfinder:
  - BATT lamp lights.
  - TALL lamp blinks.
  - During status 1 mode, the voltage display flashes.
- Alarm sound beeps

After the remaining battery power warnings appear, the GY-DV550 automatically stops operation if the battery power operation is continued.

Operating Time with Battery Pack

When the VF-P115B is used as the viewfinder and a fully charged battery pack is attached, the approximate continuous operating time is as follows:

Battery Pack	Continuous Operating Time (at 25 °C)
NP-1B	60 minutes
Magnum 14	130 minutes
NP-L40	80 minutes

- Battery operating time may differ depending on the number of times the battery has been charged, charging conditions and the operating environment, etc. Use the values in the table on the left for approximate reference times.
- Operating time is reduced in areas with a cold environment.
- Operating time is reduced when the power zoom lens is used frequently.

PRECAUTIONS FOR THE BATTERY PACK

- When the battery pack is not in use, it must be stored in a cool, dry place.
  Do not leave the battery pack in a place where it might be subject to a high temperature (under direct sunlight in a car, etc.), this could cause leakage of the fluid or shorten service life.
- When the terminal section of the battery pack gets dirty, the operating time will be shortened.
- If the operating time becomes greatly reduced even immediately after recharging, the service life of the battery pack is nearly finished. Purchase a new battery pack.

Recharging

- Recharge the battery pack after completely discharging it. Repeated recharging with residual charge remaining could result in reduced battery capacity.
- If the battery capacity is reduced by repeating incomplete recharging, or recharging without discharging, once discharge the battery pack completely, then recharge it to restore the battery capacity.
- If the battery pack is recharged with its internal temperature raised immediately after use, recharging may not be performed completely.

5. PREPARATIONS

5-1 Turning the Power ON

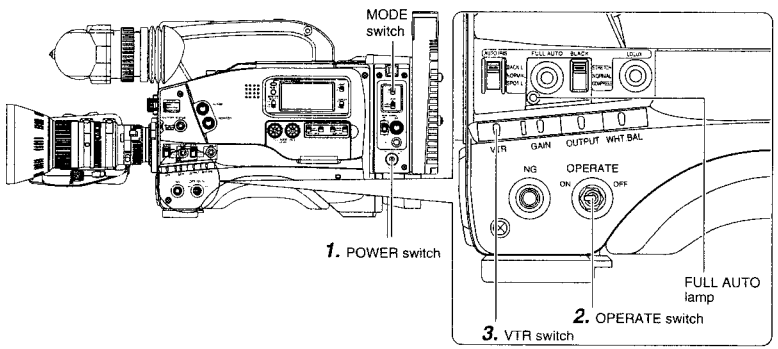

1. Select the power supplying method to the unit with the POWER switch.
- When supplying power to the unit from the DC IN connector or battery, set the POWER switch to DC IN/BATT.
- When supplying power to the unit from camera control unit through the VTR/RM multi-pin connector, set the switch to RM.

Memo:

It is not possible to supply power to the main unit from an external VCR through the VTR/RM multi-pin connector.
When the POWER switch is set to RM, power supply other than the camera will no turn on during the following conditions. At this time, the FULL AUTO lamp will flash.
- When the MODE switch is set to VTR.
- When the MODE switch is set to RM and remote control signals are not being received from the camera control unit.

2. Turn the OPERATE switch to ON.
- The power is then supplied to the unit.
- Video image is output to the viewfinder.
- The display of the VCR section is turned on.

3. Select the GY-DV550 operation mode with the VTR switch.
- The GY-DV550 operation mode may differ when the power is turned ON and when the cassette is loaded depending on the setting of the VTR switch as follows:

VTR switch setting	GY-DV550 operation mode
SAVE	GY-DV550 enters the SAVE mode (tape protect mode) and stops the drum motor. "SAVE" is displayed in the VCR operation indicating section of the Status 1 mode screen in the viewfinder. In this mode, the tape is effectively protected. In this condition, press the VTR trigger button to start recording. However, it takes longer for the operation to take place from this condition than from the STBY mode.
STBY	When a recordable videocassette is loaded, the GY-DV550 enters the record-pause mode automatically. (The drum motor is still rotating.) "STBY" is displayed on the Status 1 screen in the viewfinder. In this condition, pressing the VTR trigger button starts recording immediately.

CAUTION:
- Wait at least 5 seconds before turning the OPERATE ON again once it has been turned OFF.
- When the OPERATE is turned OFF, the unit automatically enters the tape protect mode. It takes approximately 5 seconds to enter the tape protect mode. Do not turn the OPERATE ON again within this interval.
- External VCR will not enter the SAVE mode.
- Do not directly turn the POWER switch to OFF with a tape inserted. (The unit will not enter the tape protect mode.)

5-2 Cassette Loading and Unloading

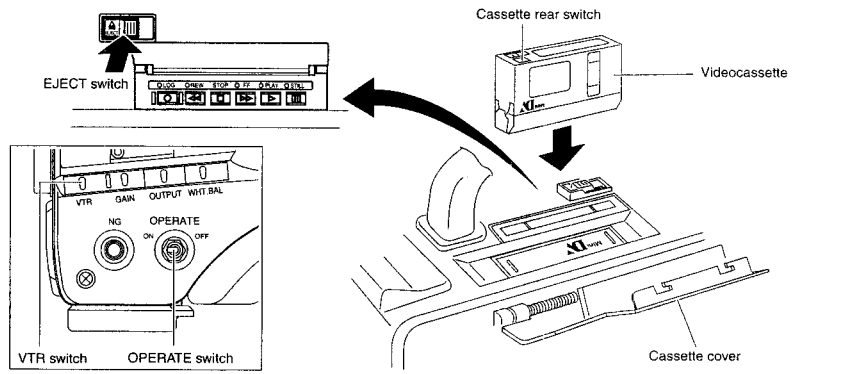

- A cassette cannot be loaded or unloaded while the GY-DV550 is in OPERATE OFF mode.
- Use a videocassette tape marked MiniDV.
- The videocassette should be held vertical and inserted straight into the slot.

Loading the Cassette

1. Set the OPERATE switch to ON.

2. Slide the EJECT switch to the side to open the cassette cover.

3. Insert a videocassette into the cassette slot after removing the tape slack.
Ensure that the videocassette is fully inserted.

The cassette indicator on the display blinks during tape loading and lights steadily after the loading has been completed.

4. Slowly close the cassette cover by pushing it in all the way.
When the cassette cover is closed, the OPERATE LED lights up green and the unit is in the condition where it can be operated. In the SAVE mode, the OPERATE LED lights orange.

- The condition at the completion of loading varies depending on the position of the VTR switch and the switch on the back of the videocassette as shown below.

VTR switch	Switch on Back of Videocassette	
	REC	SAVE
STBY	Enters record-pause mode after back-spacing.	The unit enters stop mode. "REC INH" is displayed for a few seconds on the counter display.
SAVE	In the record-pause mode and the drum rotation is stopped.	

* Recording can be started by pressing the VTR trigger button from the record-pause condition. For details on how to record, see page 53.

After the cassette cover is closed, it takes about 8 seconds before the unit can start recording or before it enters the stop mode.

CAUTION:

The GY-DV550 cannot be operated while the cassette cover is open. Make sure to close the cover before operating the unit.

Unloading the Cassette

1. Set the OPERATE switch to ON.

2. Slide the EJECT switch all the way to the side to start tape ejection.

The cassette indicator on the display blinks during tape ejection and turns off after the ejection has been completed.

- It takes a few seconds before the cassette is ejected after the EJECT switch is moved.

3. Take out the videocassette.

4. Close the cassette cover.

CAUTION:

Do not leave the unit for a long period with the cassette cover open as dirt or other foreign objects may enter the VCR section and cause malfunction.

5-3 Setting the Date and Time

The date and time of the built-in clock should be set. Powered by the backup lithium battery, the set date and time data continue to count even when the power is switched off. Whether to display the set date and time data on the viewfinder and whether to record the data on the sub-time code area of the tape during recording can be set in DISPLAY item of the Camera TIME DATE menu screen.

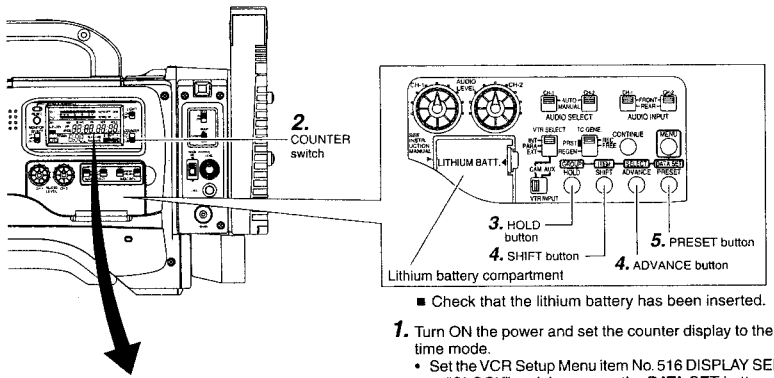

Time display (COUNTER switch: TC)

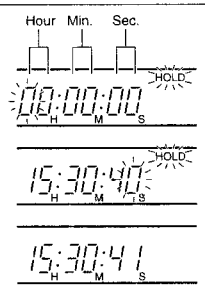

(U MODEL)
Date display (COUNTER switch: UB)

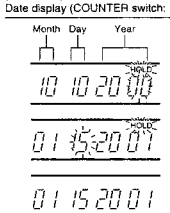

(E MODEL)
Date display (COUNTER switch: UB)

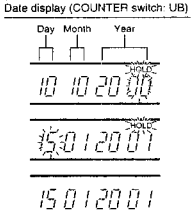

■ Check that the lithium battery has been inserted.

1. Turn ON the power and set the counter display to the date/time mode.
- Set the VCR Setup Menu item No. 516 DISPLAY SELECT to "CLOCK" and then press the DATA SET button.
  ☞ See "Displaying and Setting VCR Setup Menus" on page 73.
  ☞ See "VCR Setup Menu Contents" on page 75.

2. Set the COUNTER switch to TC or UB.
- ■ To set the time: Set the switch to TC.
  The time (Hour, Min., Sec.) is indicated on the counter display. (24-hour clock system)
- ■ To set the date: Set the switch to UB.
  The date (Month, Day, Year) (U MODEL)/(Day, Month, Year) (E MODEL) is indicated on the counter display.

3. Press the HOLD button to enter the setting mode.
The "HOLD" indicator lights up on the display to indicate that the unit is in the setting mode.
The leftmost digit on the counter blinks.

4. Set the date and time.
- Each time the ADVANCE button is pressed, the value of the blinking digit increases.
- Each time the SHIFT button is pressed, the digit to the right of the currently blinking one starts blinking. When pressed while the rightmost digit is blinking, the leftmost digit starts blinking again.
  Repeat the above procedure to set the value of all the digits.

5. To decide the set date and time data, press the PRESET button.
The "HOLD" indicator on the display turns off and the date/time display stops blinking.
The time starts counting.
- ■ When setting DISPLAY item of the Camera TIME DATE menu screen to ON, the date and time data are displayed on the viewfinder. In addition, the time and date data are recorded on the tape during recording. The viewfinder display format can be selected in the Camera TIME DATE menu screen.
  ☞ See "Time/Date Display" on page 30.
  ☞ See "TIME DATE screen" on page 84.

Memo:
To display and set the time code or user's bit, set the VCR Setup Menu item No. 516 DISPLAY SELECT to "TC".

6. SETTING AND ADJUSTMENTS BEFORE SHOOTING

6-1 Camera Settings

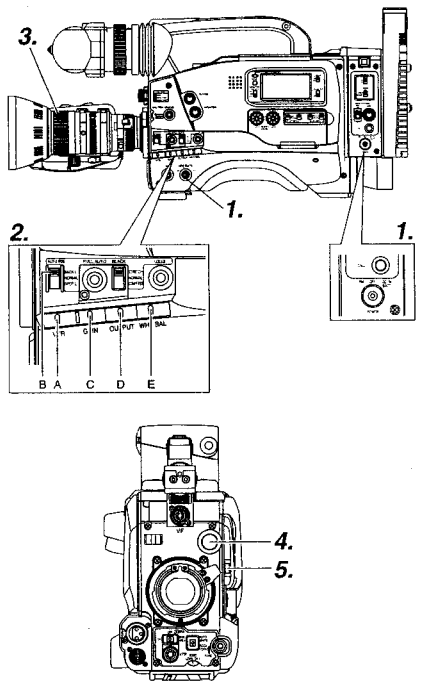

1. POWER ON
① First place a charged battery pack in the battery case on the rear section of the unit. If battery pack is not used, connect DC power to the DC INPUT connector on the rear section of the unit using the AC power adapter (AA-P250) to supply DC 12 V current.
② Set the OPERATE switch on the unit to ON.

2. SWITCH positions
- **A.** Set the VTR switch to STBY.
- **B.** AUTO IRIS switch; set to NORMAL.
- **C.** GAIN switch; set to L. The L position is 0 dB.
- **D.** OUTPUT switch; set to CAM\AUTO KNEE OFF.
- **E.** WHT. BAL (Auto White Balance) switch; set to A or B.

3. Set the lens' iris mode switch to "A" (AUTO IRIS side)

4. Choose the proper color temperature conversion filter.

	FILTER	Suitable Location
1	3200K	Indoors, dark outdoors
2	5600K+1/8ND	Outdoors
3	5600K+1/64ND	Outdoors under clear sky

5. Using the SHUTTER dial, set the shutter speed to OFF.

6-2 Screen Size (4:3/16:9 aspect ratio) Mode Selection

The screen size of recorded images can be selected in ASPECT RATIO item of the Camera OPERATION menu screen. ☞ See page 79

- To record using the standard screen, set ASPECT RATIO to 4:3.
- When setting ASPECT RATIO to LETTER, images are recorded on a screen of 16:9 aspect ratio split horizontally. In this case, the viewfinder screen will show a 16:9 screen that is horizontally split.

Memo:
- The safety zone of the standard screen or 16:9 screen can be displayed on the viewfinder by setting SAFETY ZONE item of the Camera VF DISPLAY menu screen. ☞ See page 78.
- When setting ASPECT RATIO to LETTER, 16:9 screen detection ID signal will not be outputted from the Y/C OUT connector.

6-3 Viewfinder Adjustment

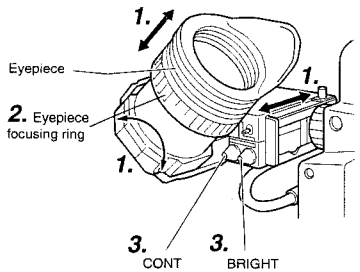

1. Adjust the position and angle of the viewfinder.

2. Diopter adjustment

Rotate the eyepiece focusing ring until the viewfinder screen image is clearly visible.

3. Brightness and contrast adjustment

When the ambient brightness changes, etc., the brightness and contrast of the viewfinder screen can be adjusted with the BRIGHT and CONT controls.

Memo:

The screen size of the viewfinder can be changed by selecting ASPECT RATIO (4:3 or 16:9 aspect ratio screen) in the OPERATION MENU screen.

6-4 External Monitor Adjustment

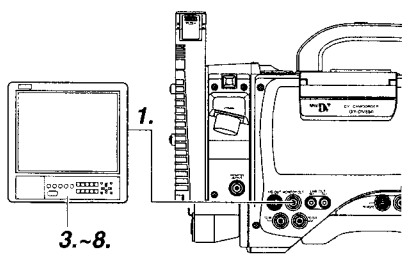

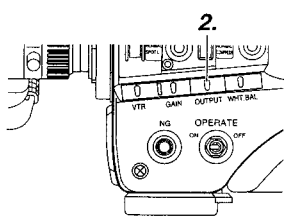

Display the camera built-in color bar signal on the video monitor and adjust the colors, contrast and brightness.

1. Connect a color video monitor to the MONITOR OUT connector of the GY-DV550.

2. Set the OUTPUT switch to BARS to output the color bar signal (SMTPE (U MODEL)/EBU (E MODEL) type color bars).

3. Set the monitor's BLUE CHECK function to ON so that the screen turns entirely blue.

4. Adjust the CHROMA control of the monitor so that there is no difference in brightness between the color bars ① and ⑧, ⑦ and ⑭.

5. With the BLUE CHECK function ON, adjust the PHASE control of the monitor so that there is no difference in brightness between the color bars ③ and ⑩, ⑤ and ⑫.

6. If the phase control adjustment above causes a difference in brightness between the color bars ① and ⑧, ⑦ and ⑭, start again from the CHROMA control adjustment in step **4.**

7. Set the monitor's BLUE CHECK function to OFF to switch the monitor back to the standard screen (R, G and B will all appear).

8. Use the monitor's brightness control to adjust so that the color bars ⑱ and ⑲ disappear but ⑳ is visible.

■ SMTPE type color bars (U MODEL)

White	Yellow	Cyan	Green	Magenta	Red	Blue
①	②	③	④	⑤	⑥	⑦
Blue ⑧	Black ⑨	Magenta ⑩	Black ⑪	Cyan ⑫	Black ⑬	White ⑭
Black ⑮	White ⑯	Black ⑰			⑱ ⑲ ⑳	㉑

The color bar screen has a configuration as shown above.
The description hereinafter refers to the positions in the color bar screen using the numbers.

■ SMTPE type color bars (E MODEL)

White	Yellow	Cyan	Green	Magenta	Red	Blue	Black
①	②	③	④	⑤	⑥	⑦	⑧

The colour bar screen has a configuration as shown above.
The description hereinafter refers to the positions in the colour bar screen using the numbers.

6-5 Back Focus Adjustment

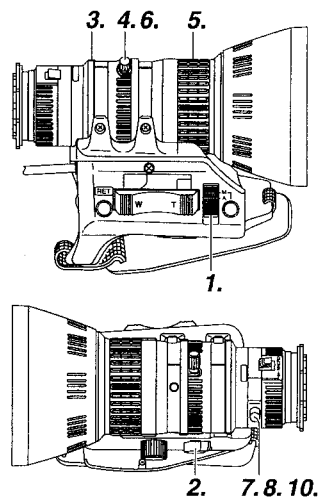

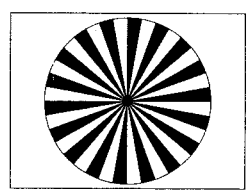

Siemens star chart

It is only necessary to perform this when the lens is attached for the first time or when focusing is not correct in both the telephoto and wide-angle positions. Adjust the viewfinder for sharpness first.

It is easier to adjust back focus when the subject is more than 3 meters from the camera.
The optimal subject for this adjustment is a Siemens star chart.

1. Set the IRIS mode switch to M (Manual).

2. Set the zoom mode to MANU (Manual).

3. Open the iris ring. If the illumination is too strong, reduce it or move to a darker place.

4. Turn the zoom lever until the lens is at the maximum telephoto position.

5. Bring the subject into focus.

6. Set the lens to maximum wide-angle.

7. Loosen the back focus ring retaining knob.

8. View the same subject and adjust the back focus ring for the best possible focus.

9. Repeat steps **4.** through **8.** about three times for fine adjustment until the subject remains in focus in both the telephoto position and the wide-angle position.

10. Tighten the back focus ring retaining knob to secure the ring.

Memo:

ACCU FOCUS can also be used in the above step **3.**

6-6 White Balance Adjustment

Since the color of light (color temperature) varies depending on the light source, it is necessary to re-adjust the white balance when the main light source illuminating the subject changes.

Note:
When a subject illuminated by a halogen lamp with a color temperature of 3,200K is shot while the color temperature conversion filter setting is set to 5,600K + ND, a proper white balance adjustment and (FAW) Full Time Auto White balance may not be accomplishable. In this case, change the color temperature conversion filter setting to 3,200K and then carry out the white balance adjustment and (FAW) again.

• Do not adjust using any highly reflective objects, such as metal, etc., as this may result in improper white balance adjustment.

WHITE BALANCE ADJUSTMENT

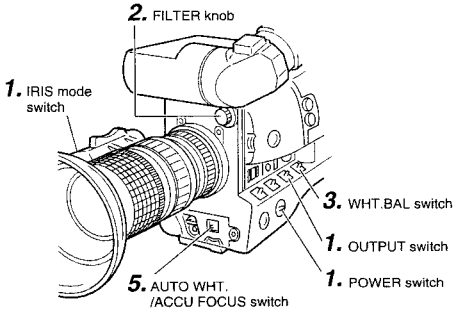

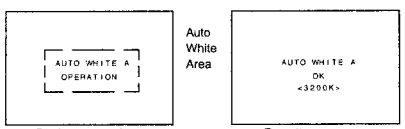

During operation

Auto White Area

Result message

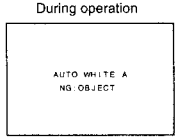

Improper object

Insufficient illumination

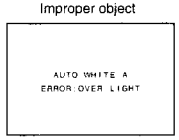

Excessive illumination

Two kinds of white balance adjustment results can be stored in memories AUTO1 and AUTO2.

■ **Adjustment procedure**

1. Set the following switches.
   • Set the OPERATE switch to ON.
   • Set the OUTPUT switch to CAM-AUTO KNEE OFF.
   • Set the IRIS mode switch of the lens to A (Auto).
2. Set the FILTER knob according to the current lighting.
3. Set the WHT.BAL switch to A or B.
4. Place a white object near the centre of the screen under the same lighting conditions as the target subject and zoom in to fill the screen with white.
5. Tilt the AUTO WHT./ACCU FOCUS switch upward (to AUTO WHITE) once and release it.
   "AUTO WHITE A, B OPERATION" is displayed in the viewfinder while the auto white balance adjustment circuit operates.
   When the white balance has been adjusted correctly, the approximate color temperature is displayed together with "AUTO WHITE A, B OK" for about 5 seconds.

Error messages

If the adjustment ends abnormally, an error message, as described below, blinks for about 5 seconds.

- **NG: OBJECT (Improper object)**
  Displayed when there is not enough white color on an object or the color temperature is not suitable.
  Replace the color temperature conversion filter or use another white object and re-adjust the white balance.
- **ERROR: LOW LIGHT (Insufficient illumination)**
  Displayed when the illumination is dim. Increase the illumination and then re-adjust the white balance.
- **ERROR: OVER LIGHT (Excessive illumination)**
  Displayed when the light is excessively bright. Decrease the illumination and then re-adjust the white balance.

FULL-TIME AUTO WHITE BALANCE (FAW)

The FAW function adjusts the white balance value automatically as the lighting condition changes.

This mode is convenient when you have no time to adjust the white balance or when the camera is moved frequently in and out of places under different lighting conditions.

■ **Setting procedure**

The FAW function can be activated with item "FAW" on the OPERATION MENU.
This item allows allocation of the FAW function to one of the WHT.BAL switch positions, A, B or PRESET.
☞ See "OPERATION SCREEN" on page 79.

CAUTION:
- The FAW (Full-time Auto White balance) function cannot provide optimum white balance with a subject outside the FAW adjustment range, for example when it contains only a single color or not enough white color.
- The accuracy of the FAW (Full-time Auto White balance) is inferior to that of the manual white balance.
- When the power is turned on with the FAW mode selected, it takes about 10 seconds for the FAW adjustment to be completed. Do not shoot within this interval.

6-7 Mixing Characters to MONITOR OUT

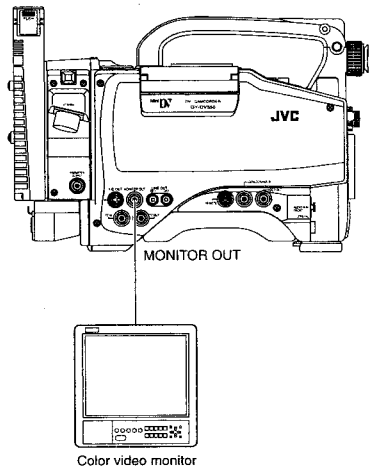

Color video monitor

When mixing characters in the MONITOR OUT connector video, set CHARACTER in the Camera SETUP MENU screen to ON.
☞ See page 83
Various characters (status screen display) are displayed by superposing the camera or external input images.

Memo:
- Color signals are not included in the return video signals of the external VCR connected to the VTR/RM multi-pin connector.
- When setting CHARACTER MIX to OFF, characters will not be displayed on the images from the MONITOR OUT connector.
  E-E images/playback image are outputted as monitor output (composite video signals).

6-8 Switch Settings of the VCR Section

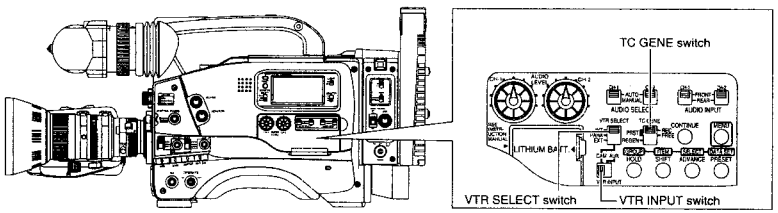

■ **Selecting the video input signals**

Video signals recorded on this unit is selected using the VTR INPUT switch.

- When recording camera images, set to CAM.
- When recording composite video signals from the GENLOCK/AUX IN connector, set to AUX.

☞ See "Recording External Video Signals" on page 57

■ **Selecting the VCR to record**

Whether to record using this unit or the external VCR connected to the VTR/RM multi-pin connector is selected using the VTR SELECT switch.

- When recording with this unit only, set to INT.
- When recording with an external VCR, set to EXT or PARA.

☞ See "Recording with an external VCR" on page 58

■ **Audio input signal selection**

Use the AUDIO INPUT switch to select whether the sound recorded on audio channel 1 or 2 is the sound from the AUDIO INPUT connector on the front section or the sound from the AUDIO INPUT connector on the rear section.

☞ See page 50.

■ **Audio recording level adjustment selection**

Select "AUTO" or "MANUAL" for the recording level adjustment mode for each audio channel.

☞ See page 51.

■ **VCR Setup Menu setting**

- REMOTE SELECT
  Confirm that "LOCAL" is selected if you want to operate on the GY-DV550 only.
- BACK TALLY MODE
  Select the lightning pattern of the BACK TALLY lamp.
- INPUT SELECT
  Select the input video signal (camera images or DV terminal images). To record the GY-DV550's camera image, set to "CAMERA".
- LOW CUT IN
  For each audio input connector, select whether or not the lower frequency components of the audio signal are cut. Set to this position to eliminate the wind noise of the microphone.
- SAMPLING RATE
  Select the sampling rate for audio recording (48 kHz or 32 kHz).
- CH1 FRONT VR ENABLE
  Set whether or not the front section's audio volume control should be used. The front section's audio volume control only affects the CH1 audio channel.
- AUDIO REF. SIGNAL LEVEL
  The reference recording level to the tape is selected (-20dB or -12dB
- LONG PAUSE TIME
  Select the time (in minutes) until the GY-DV550 enters the tape protection mode (drum rotation stops) when the record-pause mode is continued for long time.
- SSF MODE
  Select the mode of the S.S.F. (Super Scene Finder) function. S.S.F. function: Stores the time code of desired scenes or cue points in the unit's memory.

☞ See "S.S.F. function" on page 66.

- DISPLAY SELECT
  Select the counter display (time code or date/time indication) when the COUNTER switch is set to "TC" or "UB".

■ **Setting the time code recording function**

The GY-DV550 records SMPTE-standard (U MODEL)/EBU-standard (E MODEL) time code during recording. Set the switches according to applications.

- To record a time code as set in the built-in time code generator:
  - Set the TC GENE switch to REC.
    This position allows you to record continuous time codes when recording scenes one after another.
  - VCR Setup Menu setting (U MODEL)
    Select the time code generator's framing mode as drop frame or non-drop using the VCR Setup Menu item No. 416 "MON DROP/DROP".
- To record a time code in continuation of the existing time code on the tape:
  - Set the TC GENE switch to REGEN.
  - Set the VCR Setup Menu item No. 302 BACK SPACE to "STANDARD".

For details on the time code operations including time code presetting, see "TIME CODE OPERATION" on page 62.

6-9 Audio Input Signal Selection

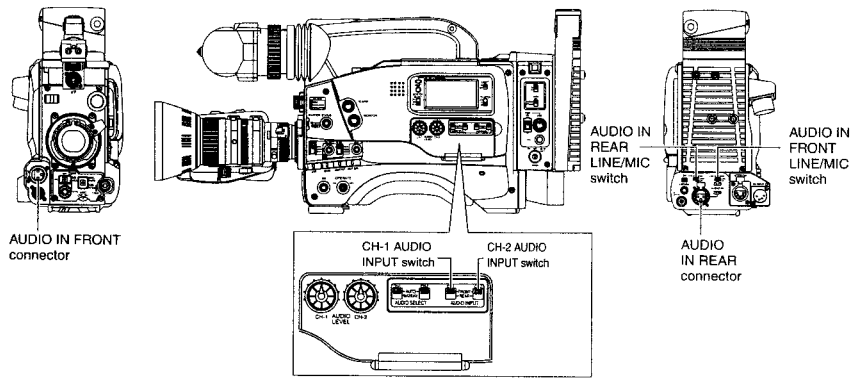

The GY-DV550 is provided with the AUDIO INPUT connector on the front section and the AUDIO INPUT connectors at the rear section for audio input.
Two channels of sound can be recorded on the tape in digital PCM format.
Using the AUDIO INPUT switch, select for each channel (CH1 and CH2) whether the sound to be recorded should be the sound from the AUDIO INPUT connector on the front section or the sound from the AUDIO INPUT connectors on the rear section.

■ **Selecting the CH-1 channel input sound**

Make the selection using the CH-1 AUDIO INPUT switch.
FRONT : The sound from the AUDIO INPUT connector on the front section is recorded on the CH-1 channel.
REAR : The sound from the AUDIO INPUT connector on the rear section is recorded on the CH-1 channel.

■ **Selecting the CH-2 channel input sound**

Make the selection using the CH-2 AUDIO INPUT switch.
FRONT : The sound from the AUDIO INPUT connector on the front section is recorded on the CH-2 channel.
REAR : The sound from the AUDIO INPUT connector on the rear section is recorded on the CH-2 channel.

■ **Selection of front audio input and rear audio input connectors**

Select the audio signal input to the AUDIO IN FRONT and AUDIO IN REAR connector using the [LINE/MIC] switch. Make settings for the AUDIO IN FRONT and AUDIO IN REAR connectors separately.

LINE : Set to this position when connected to audio equipment, etc.
The reference input level is +4 dBs.

MIC : Set to this position when using a monaural microphone.
The reference input level is -60 dBs.

MIC +48 V : Set to this position when a microphone (phantom microphone) requiring +48 V DC power supply is connected.

CAUTION:

When connecting a component that does not require +48 V power supply, make sure that the LINE/MIC switch is not set to MIC +48V.
Neglecting this could cause damage to the connected component.

6-10 Audio Input Level Adjustment

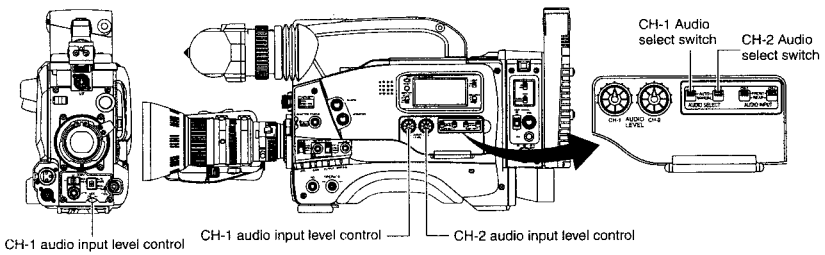

For each audio channel, use the AUDIO SELECT switches to select whether the audio input level adjustment should be set to AUTO mode or MANUAL mode.

- When set to AUTO: Audio input level is fixed. In this mode, the audio input level control does not function.
- When set to MANUAL: Audio input level can be adjusted using the audio input level controls for each audio input.

Memo:
The reference level for audio input to tape can be set in VTR Setup menu No. 257 AUDIO REF. SIGNAL LEVEL (-20dB or -12dB). The level will change for both CH1 and CH2.

■ Adjusting the audio input level control of the front section

The audio input level control on the front section only affects the CH-1 channel sound.
To use the audio input level control on the front section, make the following settings.

- Set the CH-1 AUDIO SELECT switch to MANUAL.
- Set the VCR Setup Menu item No. 246 CH1 FRONT VR ENABLE to "ENABLE".

CAUTION:
The audio input level controls on the side section work regardless of the setting of the VCR Setup Menu item No. 246 CH1 FRONT VR ENABLE.

Manual Adjustment of Audio Input Level

The audio input level can be adjusted manually when the GY-DV550 is in the record, record-pause or stop mode.

1. Set the AUDIO SELECT switch of the channel whose audio input level that you want to adjust manually to MANUAL.
2. Rotate the audio input level control corresponding to the audio input to be adjusted.
   - Adjust so that the peak level does not exceed the -3dB point when a loud sound is input.

■ How to use the audio input level control on the front section

① Set the audio input level control on the front section to maximum (10) position.
② Initially, adjust the audio input level using the CH1 recording level control on the side.
③ When a loud sound is input during recording, use the audio input level control on the front section to lower the audio input level.

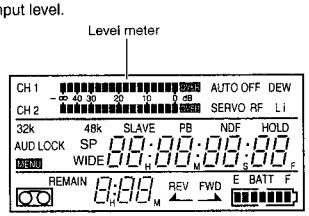

Viewfinder Status 1 Mode

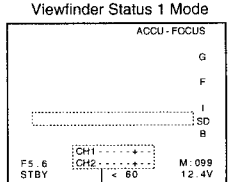

Indicator level (reference)

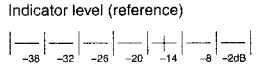

CAUTION:
When the AUDIO INPUT LINE/MIC switch on the rear section is set to MIC, be sure to check that the microphone is connected to the AUDIO IN FRONT or AUDIO INPUT REAR connector. If the microphone is not connected, increasing the audio input level could cause noise from the input connector to be recorded on the tape. When the microphone is not connected to the front AUDIO INPUT or rear AUDIO INPUT connector, set the LINE/MIC switch to LINE or turn down the audio input level control.

6-11 Monitoring Audio during Recording

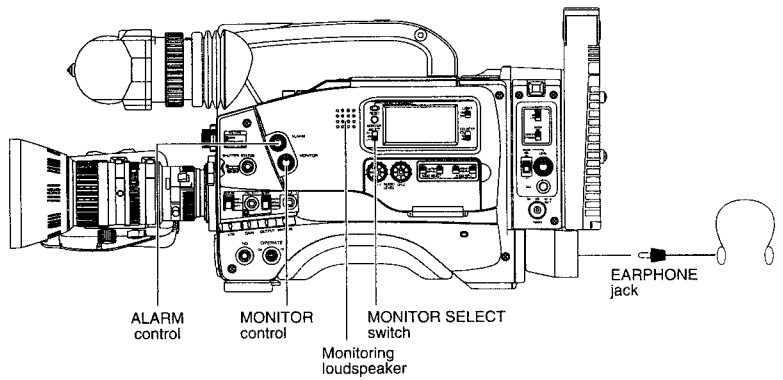

The audio input during recording, in record-pause or stop mode can be monitored through the monitoring loudspeaker or earphone.

- The monitoring audio is not output from the loudspeaker while the EARPHONE jack is in use.
- Select the audio channel to be monitored using the MONITOR SELECT switch.
  CH-1 : The sound input to the CH-1 channel is output.
  MIX : The sound input to the CH1 and CH2 channels is output mixed.
  CH-2 : The sound input to the CH-2 channel is output.
- The MONITOR volume control adjusts the monitoring volume.
- The loudspeaker or earphone outputs an alarm tone in the case of an abnormal condition occurring in the unit.
  An alarm tone is also output when the tape end is reached or when the battery is running down. The alarm tone volume can be adjusted with the ALARM control. For details on the alarm tone, see page 97.

* Do not increase the audio monitoring volume excessively; otherwise howling with the camera microphone may occur.

7. SHOOTING OPERATION

7-1 Basic Recording Operation

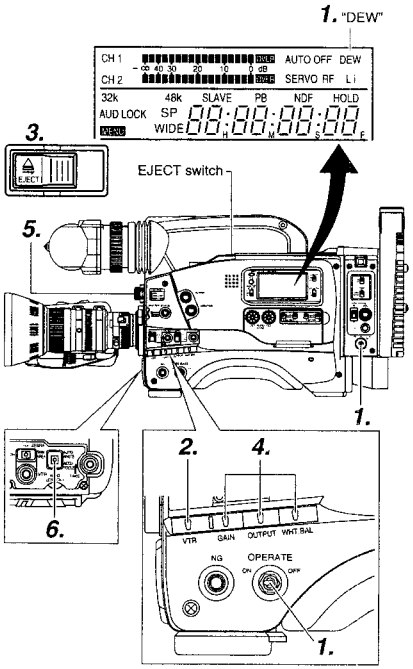

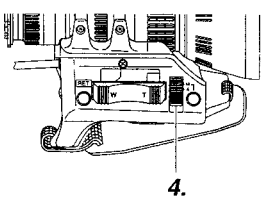

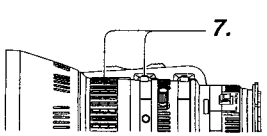

1. Set the POWER switch to DC IN/BATT and turn the OPERATE switch to ON.

Power is supplied to the unit.
Check that the condensation indicator "DEW" does not appear on the display. If it is lit, wait until the indicator goes out.

2. Set the VTR switch to the STBY position.

Even when the VTR switch is set to the "SAVE" position, pressing the VTR trigger button will start recording. However, in this case, it is necessary to wait a short time until the recording actually starts.
For details on the SAVE mode, see page 55.

3. Slide the EJECT switch to open the cassette cover.
- Ensure that the switch on the back of the videocassette is set to REC and insert the cassette correctly.
  When the cassette is inserted, the tape is loaded and the unit enters the record-pause mode.
- Slowly close the cassette cover.

- Use a videocassette marked MiniDV.
- If the cassette cover is not closed, the GY-DV550 will remain inoperative.
- Following loading of the cassette and when the OPERATE switch is turned ON/OFF, the built-in head cleaner will emit a sound while operating. This does not indicate a malfunction.
- After the cassette cover is closed, it takes about 8 seconds before the unit is ready for recording.

4. Set the switches as required.
- GAIN : Sensitivity suitable for the subject
- OUTPUT : "CAM/AUTO KNEE ON"
- WHT-BAL : "A" or "B"
- Set the IRIS switch of the lens to "A".

5. Select the FILTER according to the lighting condition.
Position 1 (3200K) : For shooting indoors or outdoors when illumination is not sufficient
Position 2 (5600K + 1/8ND): For shooting outdoors.
Position 3 (5600K + 1/64ND): For shooting outdoors under a clear sky.

6. Adjust the white balance.
☞ See "White Balance Adjustment" on page 47.

7. Point the camera at the subject and determine the angle of view and focus with the zoom lever and the focusing ring.

For servicing
The QUICK REC mode of this unit is different from conventional models such as GY-X1, GY-X2 and GY-X2B. It is not a fully automatic mode operation. In this case it is a function that shortens the time initial on the start of the recording.

7. SHOOTING OPERATION

7-1 Basic Recording Operation (Cont'd)

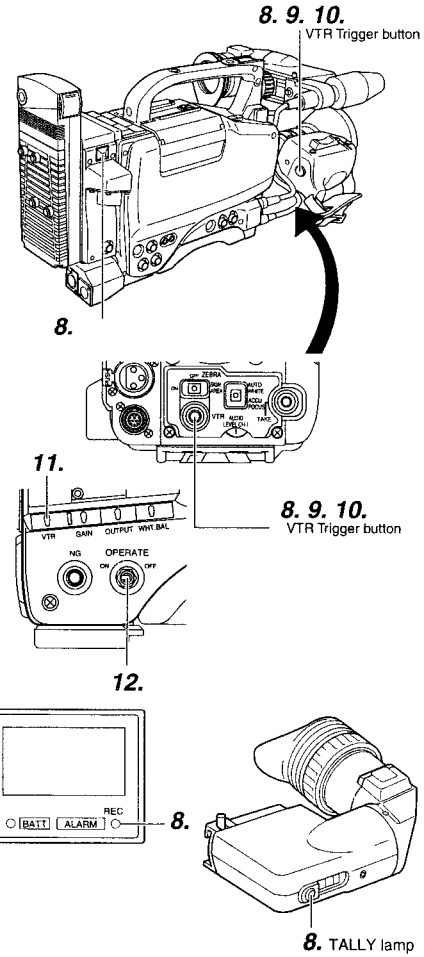

8. Press the VTR trigger button on the GY-DV550 or lens to start recording.
Once recording has started, the BACK TALLY lamp on the rear section of the unit and the tally lamp on the viewfinder light red, and the REC indication in the viewfinder lights green.

Note:
- The lightning conditions of the BACK TALLY lamp on the rear section of the unit can be changed by setting the VCR Setup Menu item No. 082 BACK TALLY MODE.
- The lamp in the viewfinder and on the front section will blink from when the button is pressed and until recording actually starts.

9. To stop recording, press the VTR trigger button again. The TALLY lamp and REC indicator lamp go out and the unit enters the record-pause mode.
When the VTR trigger button is pressed, the unit enters the record-pause mode after rewinding the tape for about 2 seconds (back-spacing).

10. To restart recording:
Press the VTR trigger button on the GY-DV550 or lens.

11. Ending recording:
Enter record-pause mode and perform the following operations as required.
- When it is required to unload the videocassette:
  - Slide the EJECT switch.
- When it is required to put the unit in save mode:
  - Set the VTR switch to SAVE.
    Drum rotation stops and the GY-DV550 enters the tape protection/power-saving mode.

12. When shooting is completely finished, eject the cassette and set the OPERATE switch to "OFF".
When the unit is not going to be used for a long period, detach the battery pack.

About the QUICK REC START Mode

If the VTR trigger button is pressed immediately after the videocassette is inserted, the mode becomes the QUICK REC START mode that enables quick start of recording. However, when shooting starts in the middle of the tape, a blank space appears as the new scene will not be linked smoothly with the previous image.
Also, the time code does not continue. (Some overlap may also occur.)

Note:
- The unit enters stop mode at tape-end automatically, and if kept longer than 3 minutes or 30 minutes in this mode, SAVE mode is maintained. ☞ See "Menu No. 307: LONG PAUSE TIME" on page 75.
- If the VTR trigger button is pushed very quickly and repeatedly, or the OPERATE switch is moved immediately after being pressed, the viewfinder REC indicator lamp may blink and the GY-DV550 may not enter the record mode. To remedy this condition set the OPERATE switch to OFF and wait for 5 seconds or more before turning the power on again.
- A neat transition to the next recorded scene cannot be guaranteed if you end a recording by turning the OPERATE switch, POWER switch or DC power supply OFF, or by removing the battery pack.
- Before recording a scene that is particularly important, perform test shooting to ensure that normal recording is possible.
- The power consumption can be reduced by setting the LIGHT switch on the display and TALLY lamp to OFF.
- The microphone may pick up the sound of the lens' iris if the iris is changed abruptly or the iris is manually moved abruptly during recording. If you find the noise annoying, please purchase an optional microphone in order to move the microphone away from the lens or ensure that the iris is not changed abruptly during shooting.

7-2 VCR Save Mode

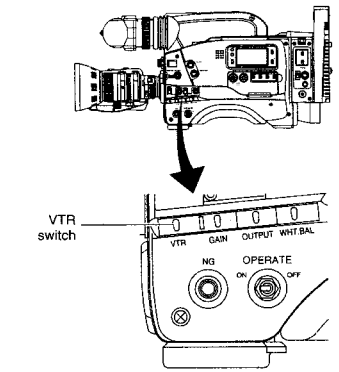

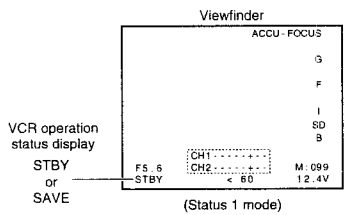

(Status 1 mode)

When a recordable videocassette is loaded, the GY-DV550 enters the record-pause mode. However, the record-pause operation condition differs depending on the setting of the VTR switch.

- **VTR switch setting**

STBY : The GY-DV550 enters the record-pause mode, and the drum is rotating at this time. (Standby mode)
The "STBY" indicator appears in the VCR operation status display in the viewfinder (in Status 1 mode).
• In this condition, recording starts immediately when the VTR trigger button is pressed.

SAVE : The GY-DV550 enters the record-pause mode but the drum is not rotating. (Save mode).
The tape is protected.
The "SAVE" indicator appears in the viewfinder (in Status 1 mode).
The OPERATE indicator lights orange.

CAUTION:
- When the VCR Setup Menu item No. 396 SSF MODE is set to the CUE MODE or MARK mode, the VCR save mode is not entered.
- External VCR will not enter the SAVE mode.

Recording from the Save mode

- In the save mode, pressing the VTR trigger button will start recording.

  However, in this case, it takes several seconds before the GY-DV550 starts recording.
- Pressing the VTR trigger button again interrupts the recording and the GY-DV550 enters the save mode again.

7-3 If Unit is Left in Record-Pause (Standby) Mode

When the GY-DV550 has remained in record-pause (standby) mode for about 30 minutes, the unit enters the save mode, in which the drum rotation is stopped automatically and the tape tension is released. (Tape protect mode)

- To start recording from the tape protect mode, press the VTR trigger button; the drum starts to rotate and recording starts in about 3 seconds.
- To return to the record-pause mode from the tape protect mode, press the VTR trigger button TWICE; the drum starts to rotate.

• The time until the unit enters the tape protect mode after it is placed in record-pause mode can be set to 3 minutes or 30 minutes with the VCR Setup Menu item No. 307 LONG PAUSE TIME.
When used in a cold environment, the setting will be 3 minutes regardless of the setting on the VCR Setup Menu.
☞ See page 75.

7-4 Checking Recorded Contents in Record-Pause Mode (Recording Check Function)

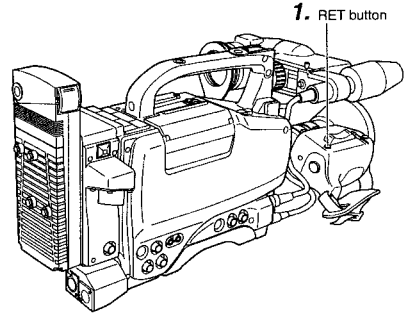

* During recording check, the following indications will appear if the error rate increases due to head clogging, etc.
  • "RF" appears on the display panel.
  • "HEAD CLOG" appears on the counter display.
  • "VTR WARNING (HEAD)" appears in the viewfinder.
* Recording check cannot be performed for an external VCR.

In the record-pause or stop mode, approximately 7 seconds of the last recorded portion can be played back.

- The recorded contents can be checked in the viewfinder or on a monitor connected to the MONITOR OUT or Y/C OUT connectors.
- In the viewfinder or on the monitor connected to the MONITOR OUT or Y/C OUT connectors, the video image from the VCR section is output.

1. In the record-pause or stop mode, press the RET button on the camera lens section.
  • The tape is slightly rewound and played back for approximately 7 seconds.
  After playback is finished, the tape returns to the position at which the RET button is pressed and the record-pause mode resumes.

■ When the RET button is kept pressed, the tape is rewound and played back for approximately 18 seconds at maximum.
  • While the RET button is pressed, the record-mode is not entered even if the VTR trigger button is pressed.

7-5 Recording External Video Signals

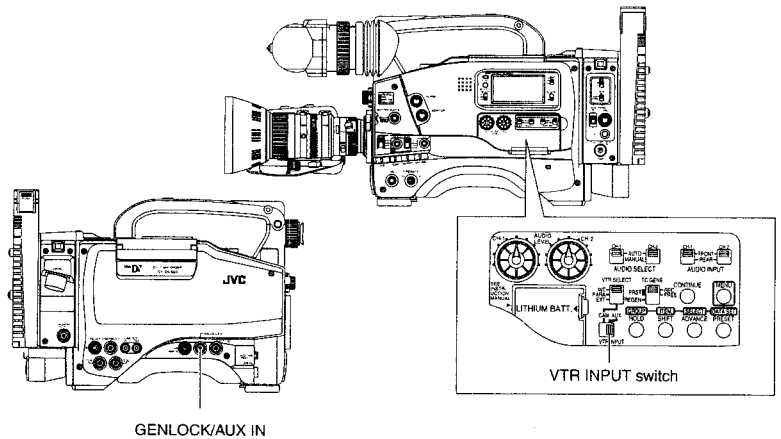

Other than camera images, composite video signals from an external device connected to the GENLOCK/AUX IN connector can also be recorded with this unit.
When recording external video signals, perform the following connection and setting.

- Input the stabilized composite video signals to the GENLOCK/AUX IN connector.
  Input level: 1V (P-P) ±0.3V (P-P)
- Set the VTR INPUT switch to AUX.

Memo:

- External video signals can only be recorded on the VCR of this unit. The VTR SELECT switch setting is ignored.
  External video signals will not be recorded on the external VCR connected to the VTR/RM connector.
- During external video signal recording, recording check by pressing the RET button on the lens section cannot be performed.
- When setting the VTR/RM switch to RM, external video signals will not be recorded even if the VTR INPUT switch is set AUX.
  The GENLOCK/AUX IN connector will function as a synchronous signal input connector.
- The camera images will be outputted from the VIDEO OUT connector and VTR/RM multi-pin connector even when setting the VTR INPUT switch to AUX.
  For details concerning the output images when setting the VTR INPUT switch to AUX, see the following table.
- Whether to add setup signals can be selected in SETUP item of the Camera SETUP menu screen. (U MODEL)

Output signals when setting the VTR INPUT switch to AUX

Viewfinder	MONITOR OUT	Y/C OUT	VIDEO OUT	VTR/RM (26-pin)
AUX (external) video	AUX (external) video	AUX (external) video	Camera images	Camera images

■ About the status screen display of the viewfinder

During external video signal recording, camera setting related information will not be displayed on the status screens.
The displayed status screens are as follows:

- Status screens 0 and 1 are displayed. Status screen 2 will not be displayed.
- AUX will appear on the upper right of the screen.
- INT will constantly appear in the VTR SELECT display.

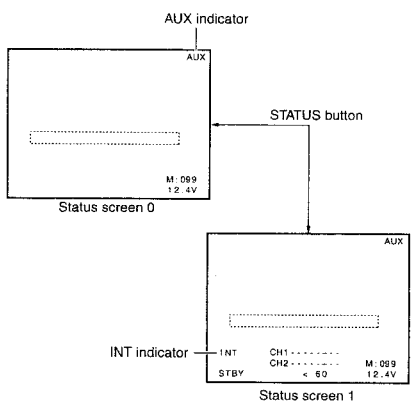

CAUTION:

Do not change the VTR INPUT switch setting during recording.

7-6 Recording with an External VCR

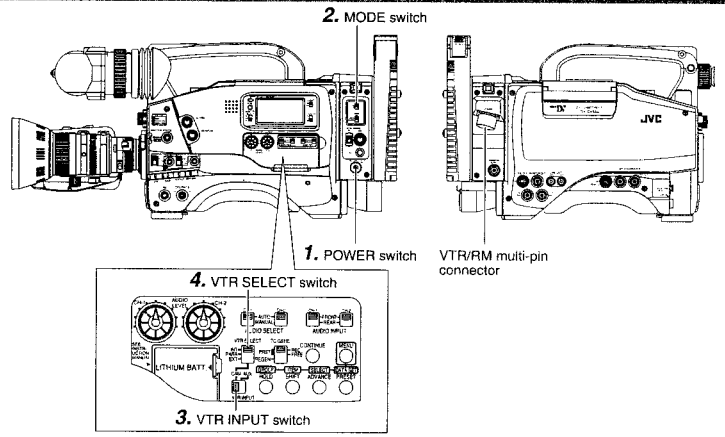

With this unit, camera images can be recorded on an external VCR connected to the VTR/RM multi-pin connector.
There are 2 types of external VCR recording: parallel recording where recording is performed on both the unit and external VCR and independent recording where recording is performed only on the external VCR.
When recording on an external VCR, perform the following connection and settings.

- Connect the external VCR to the VTR/RM multi-pin connector. See the following table for compatible VCRs and connecting cables.

Connecting VCR		Connecting cable
Model	Connector	
S-VHS (U MODEL) BR-S405	14-pin	VC-P482 (2m) VC-P484 (4m)
D9 BR-D40+SA-S40	26-pin	VC-P454B (4m)

For the connection of other VCRs, contact your nearest JVC dealer.

Settings

1. Selecting the power source
Set the POWER switch to DC IN/BATT.

CAUTION:

It is not possible to supply power to the main unit from an external VCR through the VTR/RM multi-pin connector.

2. Selecting the device connected to the VTR/RM multi-pin connector
To connect the external VCR, set the MODE switch to VTR.

3. Set the VTR INPUT switch to CAM.

Memo:

External video signals will not be outputted to the VTR/RM connector (26-pin) even when setting the VTR INPUT switch to AUX.

4. Select the recording VCR using the VTR SELECT switch.

- For parallel recording (this unit and external VCR), set the switch to PARA.
- To record only with the external VCR, set the switch to EXT.

Memo:

VTR SELECT information is displayed in status screen 1 of the viewfinder according to the VTR SELECT switch setting (PARA or EXT display).

5. The output video signals from the VTR/RM multi-pin connector can be selected in 26 PIN OUT item on the Camera SETUP menu screen.
Other than composite signals, another type of video signals can be selected.
(Y/C, RGB, and component video signals)
☞ See "26 PIN OUT" on page 83.

Memo:

Only CH1 audio signal will be outputted from VTR/RM multi-pin connector for the audio signal.

7-6 Recording with an External VCR (Cont'd)

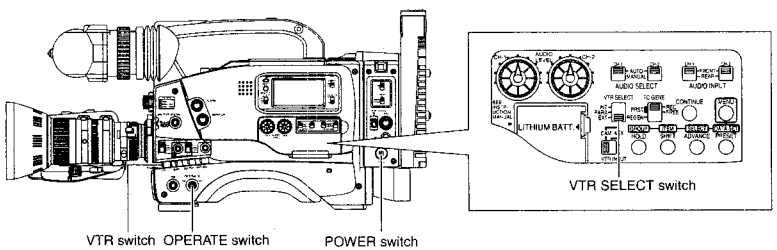

Operation

1. Set the OPERATE switch to ON.
   - Camera images will be outputted from the VTR/RM multi-pin connector.
   - Standby signal will be sent to the external VCR.
2. For parallel recording (this unit and external VCR), set the VTR switch to STBY.
   - This unit will enter the standby mode.

Memo:
The external VCR will not enter the SAVE mode even when setting the VTR switch to SAVE.

3. Press the VTR trigger button to start recording.
   - ■ To pause recording, press the VTR trigger button again.
   - During recording, the REC/ALARM lamp on the viewfinder will light. In addition, "REC 2" will appear on status screen 1 of the viewfinder.

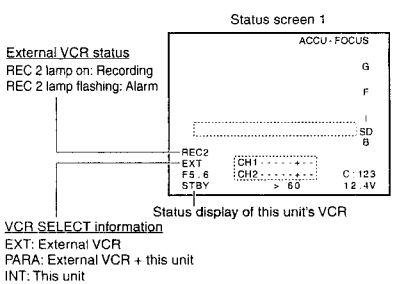

Memo:
When the VTR SELECT switch is set to EXT, the TALLY lamp turns on during recording.

About the return video/audio signal monitor of the external VCR

With this unit, the return video signals and audio signals of the external VCR can be checked through the VTR/RM multi-pin connector.

External VCR mode	Return signals
During playback	Playback images and playback sound
Other than playback	E-E images and E-E sound of external VCR

Operation

1. Set the VTR SELECT switch to EXT.

CAUTION:
Do not change the VTR SELECT switch setting during recording.

2. Press the RET button on the lens section.
   The return video and audio of the external VCR can be monitored wile the RET is held down.
   Return video: Can be monitored on the viewfinder.
   Return audio: Can be monitored using speakers or earphones.

Memo:
- During monitoring of the return audio, the volume can be adjusted using MONITOR volume.
  However, the return audio is not displayed on the audio level meter of the display. The AUDIO MONITOR switch is also disabled.

About the external VCR alarm display

- When the alarm of the external VCR is on, the REC/ALARM lamp of the viewfinder will flash. Furthermore, the REC 2 indicator on the viewfinder status screen 1 will also flash.
- The battery alarm of the external VCR will not be displayed on this unit.

8. PLAYBACK MODE

8-1 Playback Procedure

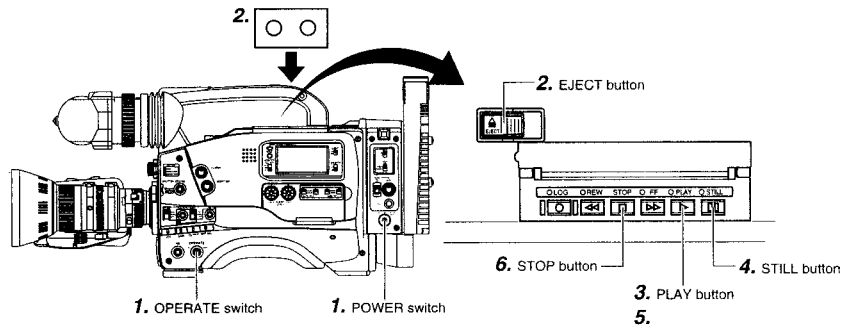

Operation

1. Set the POWER switch to DC IN/BATT. and set the OPERATE switch to ON.
2. Load the recorded videocassette correctly.
   - Slide the EJECT switch to the side. When the cassette cover opens, insert the videocassette and then close the cassette cover again.
   - ■ When a recordable videocassette (with the switch on the back of the cassette set to REC) is loaded, the unit enters the record-pause mode (STBY mode).
     In this case, press the STOP button to release the record-pause mode.
3. Press the PLAY button.
   ➡ The PLAY indicator lights and playback starts.
4. Press the STILL button to stop playback temporarily.
   ➡ The STILL indicator lights and the unit enters the still mode.
5. To re-start playback, press the PLAY button.
   ➡ The STILL indicator goes out and playback starts again.
6. To stop playback, press the STOP button.
   ➡ The PLAY indicator goes out and the unit enters the stop mode.

CAUTION:
- When the still picture mode or stop mode has continued for about 30 minutes, the unit automatically switches to the save mode to protect the tape.
  The time until the tape protect mode is initiated can be set to 3 or 30 minutes with the VCR Setup Menu item No. 307 LONG PAUSE TIME.
  When used in a cold environment, the setting will be 3 minutes regardless of the setting on the VCR Setup Menu.
- Noise may appear in the picture during still mode.
- When the automatic tracking function is activated at the start of the playback mode, digital noise may appear on the playback image.
- This unit does not allow manual tracking adjustment.
- When playing back a tape recorded on another unit, digital noise may appear during playback.
- When turning on the power with the tape inserted or after loading a tape, the built-in head cleaner will emit a sound while operating. However, this is not a malfunction of the unit.

Memo:
- If a tape recorded in the LETTER mode is played back on a 4:3 aspect ratio monitor TV. Images will be displayed in the letter box (16:9 aspect ratio) that is split horizontally.

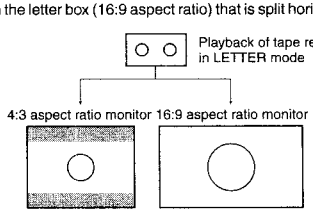

- When playing back tape recorded in the LETTER or WIDE mode, 16:9 screen detection ID signal will not be outputted from the Y/C OUT connector.
- ID signal is also not outputted when inputting WIDE signals via the DV connector (IEEE1394 signals).

8-2 Fast-Forward, Rewind

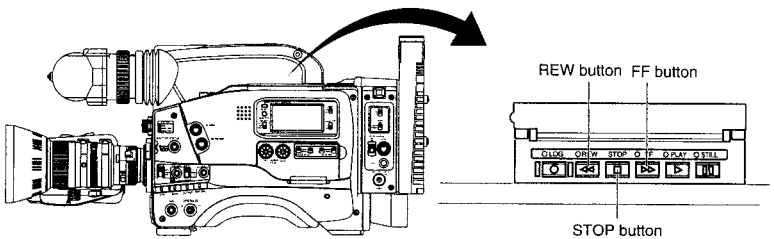

- Press the FF button in stop mode to fast forward the tape. Press the REW button in stop mode to rewind the tape.
- Press the STOP button to stop fast forwarding or rewinding.

- When the tape approaches the end during fast forwarding or rewinding, the tape speed decelerates to protect the tape.
- The time required for fast forwarding and rewinding may become longer when used in a cold environment. This is not a malfunction.

8-3 Search

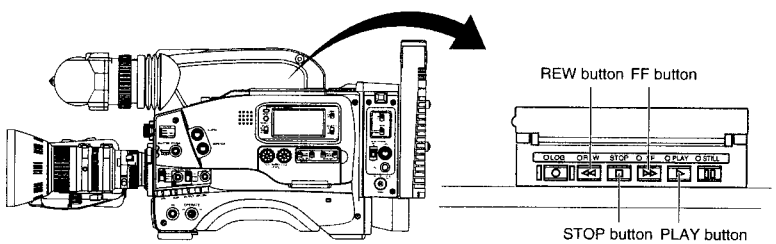

- Press the FF button in play mode to search the tape in the forward direction at about 10 times the normal speed.
  - Press the REW button in play mode to search the tape in the reverse direction at about 10 times the normal speed.
- Press the PLAY button to resume normal playback.
- Press the STOP button to stop.

- The audio is reproduced during the search.
- Video noise may be observed or the image may become unstable during the search, but this is not a malfunction.

9. TIME CODE OPERATION

The GY-DV550 records SMPTE-standard (U MODEL)/EBU-standard (E MODEL) time codes and user's bits. In the play or record mode, the reproduced time codes or user's bits are shown on the counter display.
The LTC signal from the built-in time code generator is output through the TC OUT connector.
In the play mode, the time code recorded on the tape is not output through the units connectors.

- Do not directly turn off the POWER switch in the record-pause mode; otherwise, time codes will not continue. Be absolutely sure to turn off the OPERATE switch beforehand.

9-1 Displaying Time Code

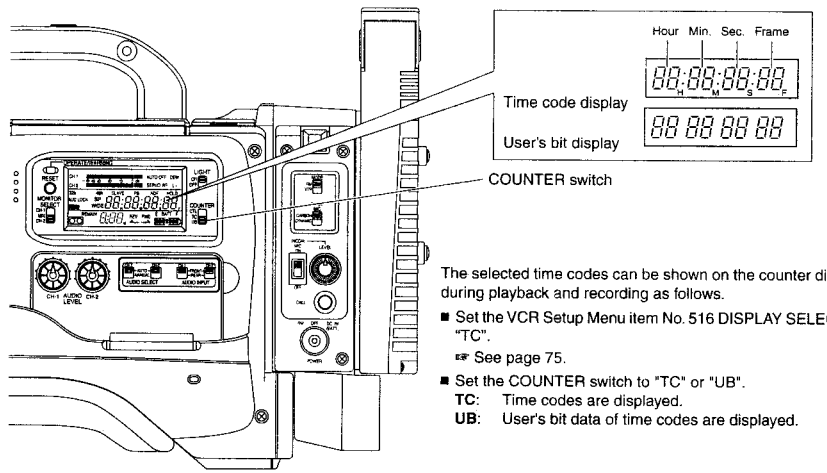

The selected time codes can be shown on the counter display during playback and recording as follows.

- Set the VCR Setup Menu item No. 516 DISPLAY SELECT to "TC".
  ☞ See page 75.
- Set the COUNTER switch to "TC" or "UB".
  TC: Time codes are displayed.
  UB: User's bit data of time codes are displayed.

9-2 Presetting and Recording of Time Code

The time code or user's bit data to be recorded onto the tape can be preset to a desired value.

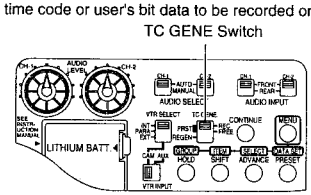

■ Setting the time code related switches

- Set the TC GENE switch to REC or FREE.

REC : The data preset in the time code generator runs only during recording.
Use this setting if it is required to record continual time codes across different scenes.
* However, approximately ±1-frame variations may occur in scene transition accuracy.

FREE: The time code starts to run from the time it is preset in the time code generator.

■ Setting the VCR Setup Menu (U MODEL)

- Set the VCR Setup Menu item No. 516 DISPLAY SELECT to "TC".

Select the time code generator's framing mode using the VCR Setup Menu item No. 416 NON DROP/DROP.

DROP : The time code generator's running method is set to the drop frame mode.
Use this setting when placing emphasis on the recording time.
The "DF" indicator lights up on the display in the drop-frame mode.

NON DROP : The time code generator's running method is set to the non drop frame mode.
Use this setting when placing emphasis on the number of frames.
In the NON DROP frame mode, the "NDF" indicator lights on the display.

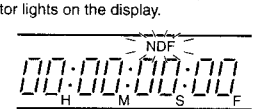

Drop frame/Non-drop frame mode (U MODEL)
In the NTSC system, the actual number of frames per 1 second is approximately 29.97 frames, but the number of frames that becomes the processing reference of the time code is 30 frames. To compensate for this difference, the mode called drop mode drops frame 00 and 01 for every minute that cannot be divided by 10.
The non-drop frame mode is when no frames are dropped and the actual time shift is neglected.

Note:
When the VCR Setup Menu item No. 398 SSF MODE is set to CUE MODE or MARK MODE, the time code generator's running method is internally set to the REGEN mode.
When this is the case and you want to enter the preset mode, set the VCR Setup Menu item No. 398 SSF MODE to "OFF", or set the TC GENE switch to the REC or FREE position again.

9-2 Presetting and Recording of Time Code (Cont'd)

TIME CODE PRESETTING PROCEDURE

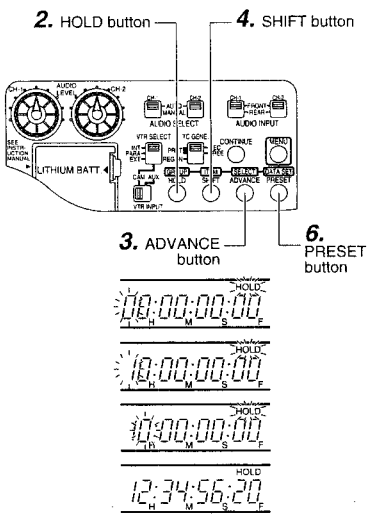

1. Display the time code on the counter display.
Set the COUNTER switch to "TC".
- Time code up to 23 hrs. 59 min. 59 sec. 29 frames can be preset.

2. Place the time code generator in preset mode.
Press the HOLD button.
- The "HOLD" indicator lights on the display to indicate the preset mode. The first digit of the counter display blinks.

3. Set the value of the blinking digit.
Press the ADVANCE button.
- The value of the blinking digit changes.

4. Change the blinking digit.
Press the SHIFT button.
- The blinking digit changes.

5. Set the desired value for all digits.
Repeat steps *3.* and *4.* for each digit.

6. Preset the set data in the memory.
Press the PRESET button.
- The set data is saved as the time code generator value. Following the above operation, the "HOLD" indicator disappears from the display, the counter stops blinking and the time code is preset.
- If the REC/FREE switch is set to FREE, the time code starts to run.

■ If you preset a wrong time code, perform steps *2. 3. 4. 5.* and *6.* again.

PRESETTING USER'S BIT DATA

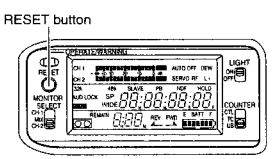

- Pressing the RESET button in the preset mode resets the time code or user's bit data to 00 00 00 00.
- If you press the HOLD button by mistake, press the HOLD button once more to return to the previous display.

■ Display user's bit data on the counter display and perform the same procedure as the time code presetting procedure.
- The user's bit can be specified using numerals or alphabetic letters from 0 to F for each digit.

Note:
Do not set "F" to all user's bit, or the data can not be read.

9-3 Recording Time Codes by Slave-Locking the Built-in Time Code Generator with External TCG

The built-in time code generator can be synchronized (slave-locked) with the SMPTE-standard (U MODEL)/EBU-standard (E MODEL) LTC time code signal which is input through the TC IN connector. Once the slave locking has been carried out, the built-in time code generator runs even when the external time code input stops. Even when the power is switched off, it continues to run on the backup lithium battery.

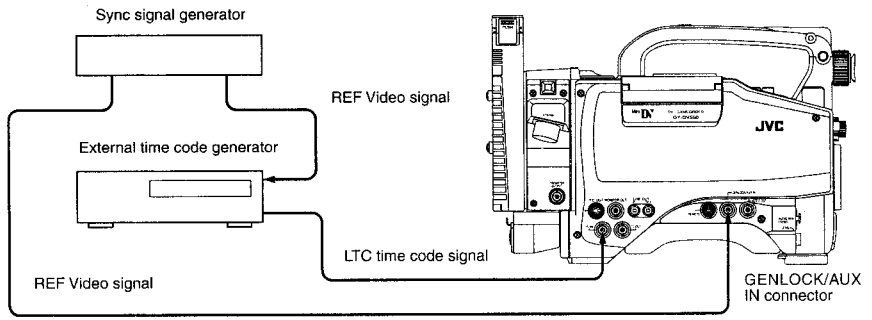

1. Input the reference video signal into the external time code generator and the GENLOCK/AUX IN connector of this unit.

Note :
When the power is switched ON while external sync signal is input, the screen moves in a vertical direction for a few seconds. This is not a malfunction.

2. Input the SMPTE standard LTC time code signal into the TC IN connector.

3. Display time code on the counter display.

4. Set the switches in the TC GENERATOR block as follows.
- Set the TC GENE switch to "FREE".
- While the TC GENE switch is set to "REC" or "REGEN", slave-locking will not take place.

■ Set the related VCR Setup Menus.
- Set the VCR Setup Menu item No. 398 SSF MODE to "OFF".
  - If set to CUE mode or MARK mode, the slave-locking will not take place.
- Set the VCR Setup Menu item No. 403 U-BIT SLAVE. Set to "TC&UB" when the user's bits should also be slave-locked with the external time code generator.
- The framing mode will be the same mode as the automatically entered time code (drop frame of non-drop frame).
  During the non-drop frame mode, the NDF indicator will light on the display.
  During the drop frame mode, the DF indicator will light on the display.
  (U MODEL)

5. Set and operate the external time code generator.
➡ The built-in time code generator is slave-locked with the input external time code data.
The SLAVE indicator lights on the display.

- If the external time code generator phase is not genlocked with the phase of the camera video signals, the "SLAVE" display will flicker.
- Once slave locking has been made, the built-in time code generator keeps on running even when the external time code generator is stopped.

Note :
Do not connect or disconnect slaves during recording as this may disturb the servo lock.

Multi-Camcorder Master-Slave Connection

When there is only one slave GY-DV550, connect it as indicated in the figure below.
When connecting several GY-DV550s as slaves, input the REF video signal to GENLOCK/AUX IN connectors of all these units from the sync signal generator.

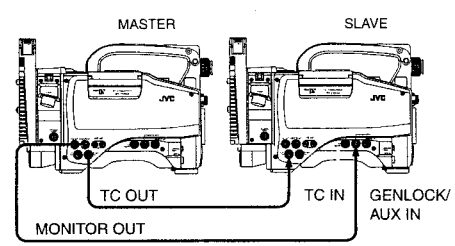

9-4 Recording Time Codes in Continuation of Time Codes Recorded on Tape

The GY-DV550 also incorporates a time code reader. Therefore, when the unit enters record mode from record-pause mode, it can read the time code data recorded on the tape and record time codes in continuation of the existing data. The recorded user's bit data is identical to the user's bit data recorded on tape.
* However, approximately ±1-frame variations may occur in scene transition accuracy.
To enable this, set the time code related switches as follows before starting recording.

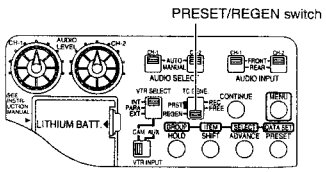

Setting

- Set the VCR Setup Menu item No. 302 BACK SPACE to "STANDARD".
- Set the VCR Setup Menu item No. 516 DISPLAY SELECT to "TC".
  ☞ See page 75.
- Set the counter display to show time codes or user's bit data.
- Set the TC GENE switch to REGEN.
  - The framing mode of the time code will be the mode automatically recorded on the tape (drop frame or non-drop frame).
    (U MODEL)

9-5 Reproducing Time Codes

The GY-DV550 incorporates a time code reader. During playback, the time code or user's bit data recorded on the tape is displayed on the counter display.

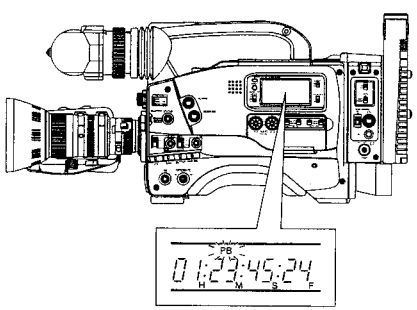

- Set the VCR Setup Menu item No. 516 DISPLAY SELECT to "TC".
  ☞ See page 75.
- Set the counter display to indicate time code or user's bit data.
- Reproducing time codes
  Press the PLAY button.
  - The "PB" indicator lights up on the display and the time code or user's bit data are indicated.

- When playing back sections where the time code is not recorded, the time code progression stops.
  The playback mode continues.

Note:
- Time code more than two hours can not be displayed correctly by consumer DV equipment, which has no capability to display more than two hours.
- The time code being played back will not be outputted to the TC OUT connector.

10. S.S.F. (Super Scene Finder) FUNCTION

10-1 Explanation of the S.S.F. Function

During recording, the S.S.F. function records the time code data at the point of time of a desired recorded scene in the unit's memory. Using the S.S.F. data stored in memory during after-processing of the recorded image allows efficient use of the tape.
The S.S.F. function comprises the two modes CUE and MARK. Select the mode using the VCR Setup Menu item No. 398 S.S.F. MODE.
When the VCR Setup Menu item No. 398 SSF MODE is set to CUE MODE or MARK MODE, the time code generator's running method is internally set to the REGEN mode.
When shooting in either of the modes, the time code data is stored in the unit's memory when the TAKE button on the front section is pressed.
The model ID data, reel number, the number of each scene, and the time code data of IN points, OUT points, and CUE points are recorded as S.S.F. data.

■ CUE Mode:
When the TAKE button is pressed at the desired scene during shooting of a given cut, the time code data at that point is stored as CUE data in the unit's memory. The time code data at the time when recording is started or stopped with the VTR TRIGGER button are stored in the unit's memory as scene data.

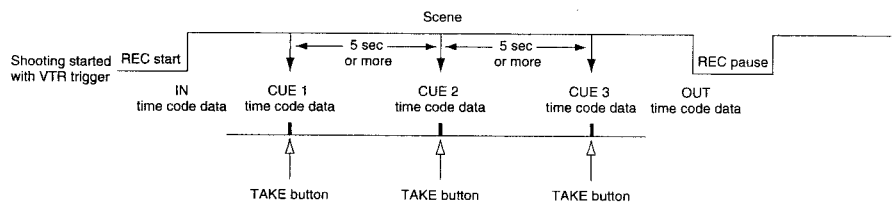

Note:
- Leave an interval of at least 5 seconds between memorization of CUE data.
  If the TAKE button is pressed within 5 seconds from the previous point, the new point is not memorized.
- In the CUE mode, time code log data stored on the camera memory may differ from the actual time code recorded on tape at the time of pressing the TAKE button. This difference may be within 3 frames and it is not a malfunction.

■ MARK MODE
During shooting of a given cut, press the TAKE button at beginning of a desired scene and then press the TAKE button again at the ending of the scene.
The time code data at the point where the TAKE button is pressed first becomes the start point of the scene and time code data at the point where the TAKE button is pressed the second time becomes the ending point, and both are stored in the unit's memory.

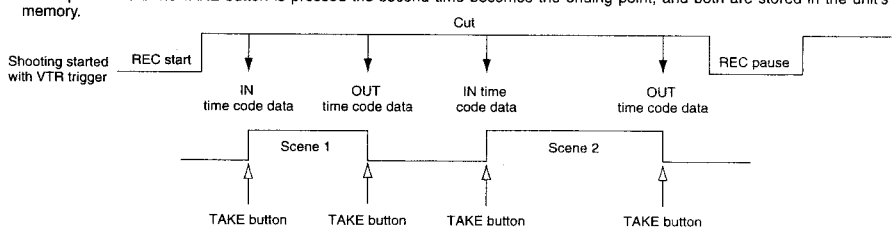

- The number of scenes that can be registered is 127, and up to 238 registered scene numbers can be stored in memory. When either of these capacities is reached, the indication showing the number of registered scenes on the viewfinder screen becomes "M: - - -".
- Up to 253 CUE points can be stored in memory.
  For each registered CUE point, the scene number decreases by two.
- When recording in the S.S.F. mode, the reel number (cassette number) for each cassette is recorded in the memory of the GY-DV550 and on tape.
- When the videocassette is replaced, new S.S.F. data is generated. S.S.F. data for six videocassettes can be stored in the internal memory.
  Before recording the seventh cassette in the S.S.F. mode, be sure that necessary data has been transferred from the memory to the non-linear editing controller or other component, or write data to the tape for each recording. ☞ See page 69.

Note:
- When recording is not performed in the S.S.F. mode, be sure to set the VCR SETUP MENU item No. 398 SSF MODE to OFF.
- Be sure to record S.S.F. data continuously on the same tape. It is not possible to rewind the tape for overwriting during the recording.
  If the tape is rewound in the middle of a recording, or after similar operation is performed, be sure to use the Scene End Cue Up function in order to ensure that new data are recorded in continuation of the existing data.
  ☞ See "About the Scene End Cue Up Function" on page 69.
- In the S.S.F. mode, the STBY/SAVE switch does not activate the VTR save mode. (The save mode is activated by a long pause.)

10-2 How to Use the S.S.F. Function

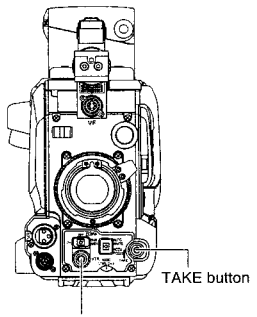

CUE Mode

1. Set the S.S.F. mode as CUE mode.
Set the VCR Setup Menu item No. 398 S.S.F. MODE to "CUE".
☞ See page 75.

- The CUE mode is indicated in the lower part of the Status 1 screen in the viewfinder.

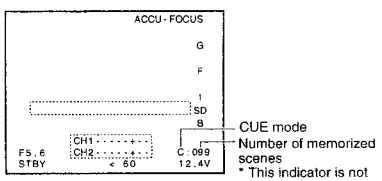

2. Press the VTR trigger button to start the recording.

3. When you reach the point that you want to memorize as the CUE point, press the TAKE button.
- The time code data of the point where the TAKE button is pressed is stored in the unit's memory as CUE data. The LOG button's LED lights during memorization of the CUE point and the "*" mark is shown in the viewfinder.

■ Press the TAKE button each time you reach a point that you want to memorize as CUE data.

4. Stop the recording.
Press the VTR trigger button.

MARK Mode

1. Set the S.S.F. mode as MARK mode.
Set the VCR Setup Menu item No. 398 S.S.F. MODE to "MARK".
☞ See page 75.

- The MARK mode is indicated in the lower part of the Status 1 screen in the viewfinder.

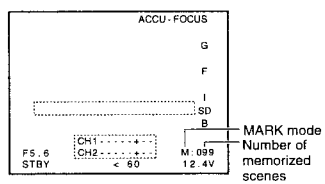

2. Press the VTR trigger button to start the recording.

3. When you reach the scene that you want to memorize, press the TAKE button.
- The time code data of the point where the TAKE button is pressed is stored in the unit's memory as the start point of the scene.

4. When you reach the scene that you want to memorize as the ending point, press the TAKE button again.
- The time code data of the point where the TAKE button is pressed is stored in the unit's memory as the ending point of the scene.
- The LOG button's LED lights during memorization of the IN point and the "*" mark is shown in the viewfinder. The LOG button's LED remains off during memorization of the OUT point and the "*" mark is not shown in the viewfinder.

■ For each scene that you want to memorize, repeat steps ***3.*** and ***4.***

5. Stop the recording.
Press the VTR trigger button.

Note:
- Once a tape with recorded S.S.F. data is rewound but not ejected before playback or recording is performed on it again, the previous S.S.F. data cannot be automatically erased when S.S.F. data are recorded (when you overwrite the previous image). Therefore, the S.S.F. data of the overlapped sections will not correspond to the video image. Furthermore, please note that the time code data may differ from the actual data if recording is started in the CUE mode in this situation.

10-3 Deleting S.S.F. Data

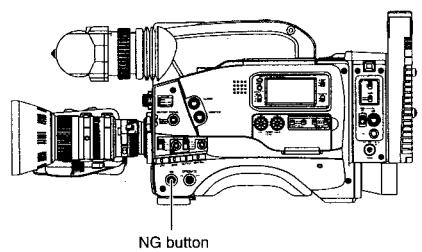

The S.S.F. data recorded in the unit's memory can be deleted in the record mode and the record-pause mode.
This function is only valid in the MARK mode.

■ In the record mode, press the NG button after the IN point or OUT point has been stored.
- When pressed after the IN point has been stored, the S.S.F. data of the scene being recorded are deleted. When pressed after the OUT point has been stored, the S.S.F. data of the immediately preceding scene are deleted. When the NG button is used for deleting operation, the next scene number is updated to a new number.

■ In the record-pause mode, press the NG button.
The S.S.F. data of the immediately preceding scene are deleted.

Note:
The NG button is only valid for the immediately preceding scene. The erase of scene data by the NG button cannot be confirmed on the unit.

10-4 Resetting S.S.F. Data

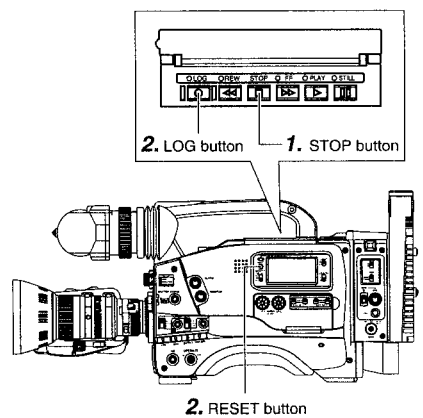

Operation

1. Press the STOP button to enter the stop mode.

2. Press the RESET button while the LOG button is kept pressed.
- All the S.S.F. data held in the memory are erased. However, the reel number is not cleared.

10-5 Writing S.S.F. Data to Tape

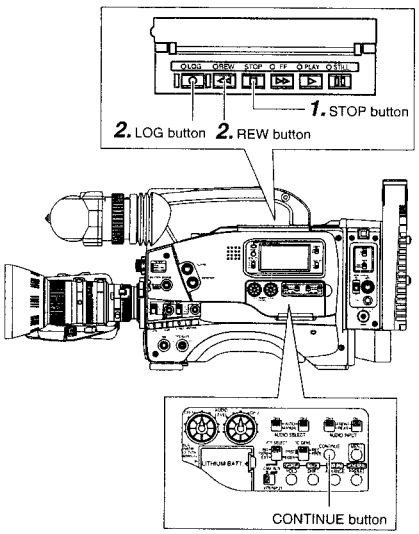

S.S.F. data stored in the unit's memory can be written to the beginning of tape.

Precautions when writing S.S.F. data

- When S.S.F. data stored in the memory of the GY-DV550 is written to the beginning of the rewound tape, approximately 5 seconds of recorded video and/or sound will be erased at the beginning.
  In the case of important recordings, leave 5 seconds or more of the tape unrecorded before starting recording.
- Writing of S.S.F. data should be done with the DC cable disconnected.

Operation

1. Press the STOP button to enter the stop mode.
2. Press the REW button while the LOG button is kept pressed.
   - The REW indicator blinks during tape transport in the writing position.
   - The LOG indicator lights while S.S.F. data are being written to the tape.
   - When writing to the tape is completed, the LOG indicator goes out.

About the Scene End Cue Up Function

■ When the CONTINUE button is pressed while the LOG button is kept pressed in the stop mode, the tape winds to the S.S.F. data's last OUT point, after which the unit enters the record-pause mode. (Scene End Cue Up)
The FF button's LED blinks during the Scene End Cue Up mode.

Note:
Once a tape with recorded S.S.F. data is ejected and then reinserted again, the previous data will be erased if new S.S.F. data are recorded on the tape.

10-6 Outputting S.S.F. Data

The S.S.F. data in the memory of the main unit or that recorded at the beginning of the tape can be output via the REMOTE connector using the RS-232C controller.
For how to make connections for this, refer to "Connecting a PC" on page 71.

Operation

In the stopped condition, the GY-DV550 answers with the S.S.F. data when it receives the RS-232C command D5h "S.S.F. DATA SENSE" from the PC.
(Indication example)
START
ID NO: 2c97
REEL NO: 1818

SCENE	MARK IN	MARK OUT	CUE
001M	00:00:00:16	00:00:04:19	
002M	00:00:06:03	00:00:08:08	
003C	00:03:15:17	00:03:57:00	
004C	00:03:58:18	00:05:37:24	00:04:00:21
004C	00:03:58:18	00:05:37:24	00:04:07:22
004C	00:03:58:18	00:05:37:24	00:04:18:23

END

Operation

■ When recording in the S.S.F. mode is completed, and the cassette tape has not been taken out, the S.S.F. data stored in the memory of the GY-DV550 are output when the RS-232C command D5h is received.

■ If the tape recorded in S.S.F. mode is ejected and then loaded again, the GY-DV550 rewinds the tape to the beginning and plays back for about 10 seconds when it receives the RS-232C command D5h.
During the playback, the model ID data and reel number recorded on the tape are read. If corresponding S.S.F. data are found in the memory, these data are output.
If corresponding S.S.F. data are not found in the memory, the tape is rewound to the beginning once more, and after about 20 seconds of slow playback the stop mode is entered.
During slow playback, if S.S.F. data are written at the beginning of the tape, these data are read out, and after the stop mode is entered the S.S.F. data are output.
* If S.S.F. data does not exist, the 05h (NOT TARGET) command is output.

11. USING EXTERNAL COMPONENTS

11-1 Connecting a Video Component with DV Connector

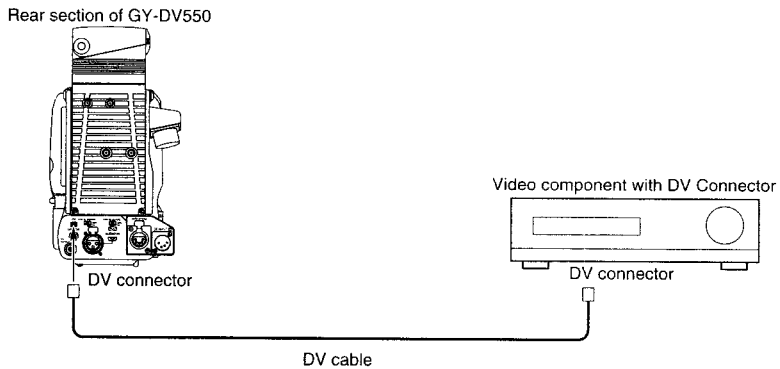

When connecting the GY-DV550 to other component with DV connector, be sure to observe the following procedure.

■ When using the GY-DV550 as playback component

1. Turn ON both units.
2. Confirm that the VCR Setup Menu item No.126 INPUT SELECT is set to "CAMERA"(cA).
   * If set to "IEEE1394", set it to "CAMERA" and then turn ON the power again.
3. Insert the videocassette.
4. Connect the DV cable.
   * Always connect the DV cable last.

Memo:
- When the GY-DV550 is controlled through the DV connector, set the VCR Setup Menu item No.050 REMOTE SELECT to "IEEE1394".
  However, the following functions may not work depending on the component that the GY-DV550 is connected to.
  REC
  FF (FWD search is possible)
  REW (REV search is possible)
- When the DV cable is connected for communication with another component, to stabilize the IEEE1394 output signal, the STILL mode is activated for a few seconds and the LED of the STILL button on the top section of the GY-DV550 lights when the mode is switched to PLAY or x1 FWD search.
  * The x1 FWD search only works during IEEE1394 control or RS-232C control.
- The operation method differs with the characteristics and specifications of the connected equipment. Even if connection is possible, operation or data communication may sometimes be impossible to perform.

■ When using the GY-DV550 as recording component

1. Turn ON both units.
2. Set VCR Setup menu No. 257 AUDIO REF. SIGNAL LEV. For proper E-E audio output, set the VCR Setup Menu No. 257 to the audio reference level of the tape on the player (-12 dB or -20 dB).

Memo:
When VCR Setup menu No. 126 INPUT SELECT is set to IEEE1394, No. 257 AUDIO REF. SIGNAL LEV setting cannot be changed.

3. Set the VCR Setup Menu item No.126 INPUT SELECT to "IEEE1394"(iE).
4. Insert the videocassette.
5. Connect the DV cable.
   * Always connect the DV cable last.

Memo:
- When recording while controlling the GY-DV550 through the DV connector from another component with DV connector, set the VCR Setup Menu item No.050 REMOTE SELECT to "IEEE1394".
  In this case, it takes approximately 2 to 3 seconds before recording starts on the GY-DV550.
- The audio recording level to the tape constitutes an input signal reference level regardless of setting the VCR Setup Menu No. 257 AUDIO REF. SIGNAL LEV.

■ When the GY-DV550 is used as camera, and a backup recording is made on another component via the DV connector, set the VCR Setup Menu item No.126 INPUT SELECT to "CAMERA".

Note:
If the above procedure is not performed correctly, the playback picture may be disturbed or the sound may fall out. If this happens, redo the connection by performing steps **1.** to **4.** described above.

11-2 Connecting a PC

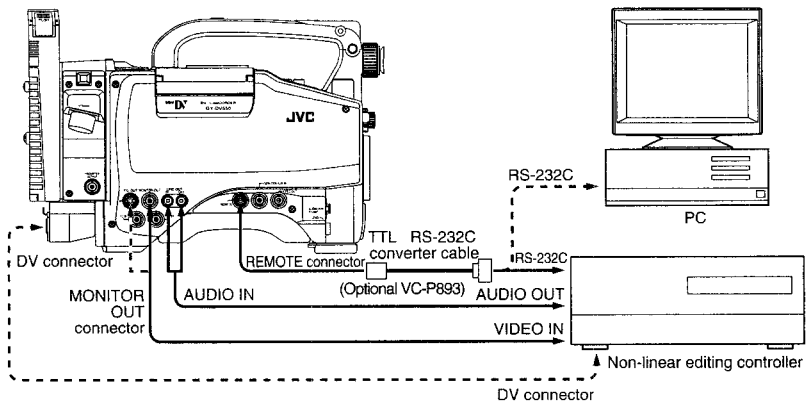

Perform the following settings when connecting the unit to a Non-linear editing controller, etc.

Connections

Connect the GY-DV550's VTR REMOTE connector to the RS-232C connector on the PC or the non-linear editing controller using the TTL ⇔ RS-232C converter cable.

Or connect the GY-DV550's DV connector and the DV connector of the non-linear editing controller using a DV cable.

For compatible non-linear editing controller, consult with your JVC dealer.

Settings

- To remote control the PC or non-linear editing controller by means of RS-232C, set the VCR Setup Menu item No. 050 REMOTE SELECT to "IEEE1394+RS232C". ☞ See page 74.
- To remote control the GY-DV550's VCR using the DV connector's IEEE1394 option, set the VCR Setup Menu item No. 050 REMOTE SELECT to "IEEE1394". ☞ See page 74.

Note:

- When a cable is connected to the REMOTE connector, the VTR Setup Menu is not displayed in the viewfinder. Make settings on the VTR Setup Menu while the cable is not connected.
- When a cable is connected to the REMOTE connector, the VCR operation mode will not be displayed correctly on the Status 1 screen in the viewfinder.

■ The S.S.F. data stored in the memory of the unit or at the beginning of the tape can be output through the REMOTE terminal.
☞ See page 69.

12. SETUP MENU

12-1 VCR Setup Menu

The setup menus for the VCR section can be set while observing the menu in the viewfinder and on the unit's counter display. The set contents are stored in the memory and retained even after the power is switched OFF.

VCR SETUP MENU CONFIGURATION

The VCR Setup Menu is a two-layer construction.
The VCR Setup Menu consists of five group menus divided according to functions. When a Group menu is selected, the menu's Item menu opens. Each Item menu contains one or several items, and the various items can be set individually as required.

VCR Setup Menu

Group Name		Item Menu Contents
000	SERVO/SYSTEM	Selection of remote control to control the unit
		Selection of advance amount in STILL mode
		Selection of BACK TALLY lamp lighting pattern
100	VIDEO	Selection of Video input
200	AUDIO	Selection of low cut for audio input signals
		Selection of sampling frequency for audio input signals
		Selection of front section audio volume control
		Selection of standard recording level
300	SYSTEM	Selection of amount of back space for recording pause
		Selection of long pause/still duration
		Selection of battery type
		Selection of S.S.F. (Super Scene Finder) mode
		Selection of operation during FF/REW remote signal reception
400	TIME CODE	Selection of user's bit during slave loking to time code
		Selection of time code framing mode (U MODEL)
500	ON SCREEN	Selection of counter display method (Time code/Date/Time)
HM	HOUR METER	Display of hour meter (accumulated running time of head drum)

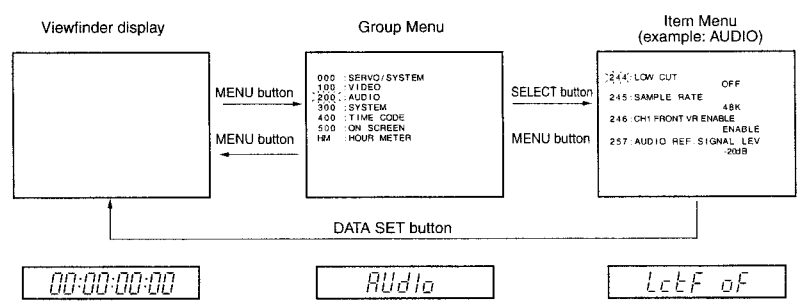

For servicing
See the service manual page 1-23, "1.14 SERVICE MENU (VCR)".

12-1 VCR Setup Menu (Cont'd)

DISPLAYING AND SETTING VCR SETUP MENUS

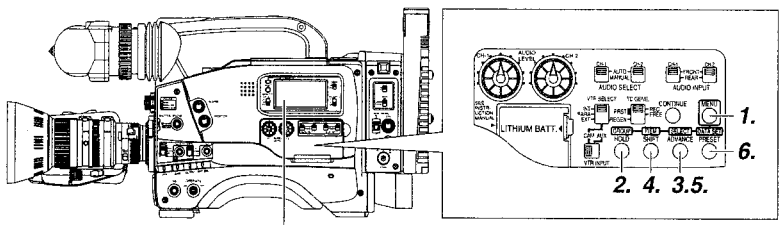

"MENU" indication

Viewfinder

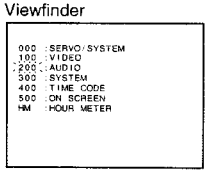

GROUP menu screen

Counter display

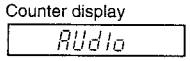

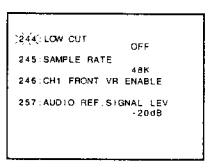

Item menu screen

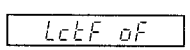

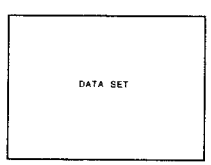

DATA SET display

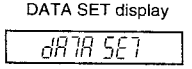

1. Engaging the VCR Setup Menu mode.
Press the MENU button.
- The "MENU" indication in the display section starts blinking and the VCR Setup Menu appears in the viewfinder and on the counter display.

Note:
When a cable is connected to the REMOTE connector, the VTR Setup Menu is not displayed in the viewfinder.

2. Selecting the GROUP.
Press the GROUP button.
- Each time the GROUP button is pressed the selected GROUP number is shown blinking on the viewfinder screen. The counter display shows the selected group.

3. Open the Item menu of the selected GROUP.
Press the SELECT button.

4. Selecting the Item.
Press the ITEM button.
- Each time the ITEM button is pressed the selected item number is shown blinking on the viewfinder screen. The counter display shows the selected item.

5. Changing the setting value of the item.
Press the SELECT button and select the setting value.
- When multiple items should be set, repeat the operations of steps *4.* and *5.*
- To set menu items in other groups, press the MENU button. When the relevant group menu is displayed, perform the setting.
- When the GROUP button is pressed, the items of the higher order group menu are displayed.

6. Saving the setting value.
Press the DATA SET button.
- "DATA SET" appears in the viewfinder and on the counter display and the setting value is saved in the GY-DV550's memory. The display returns to the normal screen mode when data has been saved.
- If the MENU button is pressed without pressing the DATA SET button, the display returns to the normal screen mode without the setting value being changed.

12-1 VCR Setup Menu (Cont'd)

VCR SETUP MENU CONTENTS

Group	Item Upper row: Viewfinder display Lower row: Counter display indication	Setting Value	Contents	Factory Setting
SERVO /SYSTEM	050: REMOTE SELECT	LOCAL IEEE1394 IEEE1394+ RS232C	Selection of the method for remote control of the VCR. LOCAL : Choose this setting when the VCR should be controlled using the operation buttons on the GY-DV550 only. IEEE1394: Choose this setting when the VCR should be remote controlled from a DV connector equipped video component connected to the DV connector on the rear section of the GY-DV550. IEEE1394+RS232C : Choose this setting for control by means of the VCR remote control signal from the REMOTE connector on the GY-DV550. **Note:** • The operation buttons on the GY-DV550 remain effective even when set to IEEE1394 or IEEE1394+RS232C.	LOCAL
	rnSL	Lc IE 23		
	052: STEP SLOW MODE	FIELD FRAME	Selects the advance amount in STILL mode. (Frame/Field advance is effective only with the external remote control signal.) FIELD : Field-by-field advance. FRAME : Frame-by-frame advance.	FRAME
	StEP	Fd FM		
	082: BACK TALLY MODE	OFF ON BLINK	Selection of the lighting pattern of the BACK TALLY lamp on the rear section during recording. OFF : The lamp is always off. ON : The lamp lights during recording. It remains off until the VTR trigger button is pressed to start the recording. BLINK : The lamp lights during recording. It blinks when the VTR trigger button is pressed to start the recording.	BLINK
	rtMd	oF on bL		
VIDEO	126: INPUT SELECT	CAMERA IEEE1394	Selection of the input video signal. Settings cannot be changed during recording. CAMERA : Camera image is input. IEEE1394 : The image from the DV connector equipped video component connected to the DV connector on the rear section is input. **Note:** The setting of this item can only be changed in the stop mode or when a cassette is not loaded.	CAMERA
	vid	cA, iE		
AUDIO	244: LOW CUT	OFF CH1 CH2 CH1 & CH2	To select whether or not the low frequencies of the audio signal from the audio input connectors are cut. Set to ON to reduce the wind noise of the microphone. OFF : The CH1 and CH2 low frequencies are not cut. CH1 : Only the low frequencies of the audio signal input to the CH1 channel are cut. CH2 : Only the low frequencies of the audio signal input to the CH2 channel are cut. CH1& CH2: The low frequencies are cut for both CH1 and CH2.	OFF
	LctF	oF 01 02 on		
	245: SAMPLING RATE	32K 48K	To select the sampling rate for digital PCM audio recording of the tape (both CH1 and CH2). 32K : Digital recording occurs with 12-bit, 32 kHz sampling 48K : Digital recording occurs with 16-bit 48 kHz sampling. * The DV format offers recording tracks for up to 4 channel when recording using 12-bit, 32 kHz sampling. The GY-DV550 records two of these tracks. The GY-DV550 does not allow after-recording. **Note:** The setting of this item can only be changed in the stop mode or when a cassette is not loaded.	48K
	snPL	32 48		
	246: CH1 FRONT VR ENABLE	DISABLE ENABLE	To select whether or not the front section audio input level control should be operative. The front section audio input level control only affects the audio signal recorded on CH1. DISABLE : Use of the front section audio input level control is disabled. ENABLE : Use of the front section audio input level control is enabled. * The CH-1 audio input level control on the side section works regardless of the setting.	ENABLE
	FruL	oF on		
	257: AUDIO REF. SIGNAL LEV	-20dB -12dB	To set the reference recording level of the tape (both CH1 and CH2). Playback should also be made with the setting used during recording. -20dB : Records with -20dB as the reference recording level. -12dB : Records with -12dB as the reference recording level. Use this setting when playing back the tape using a consumer-oriented DV player. * The recording level of the IEEE 1394 signal has nothing to do with it. **Note:** When No. 126 INPUT SELECT is set to IEEE1394, this item cannot be changed.	-20dB
	ArEF	20 12		

12-1 VCR Setup Menu (Cont'd)

Group	Item Upper row: Viewfinder display Lower row: Counter display indication	Setting Value	Contents	Factory Setting
SYSTEM	302: BACK SPACE	STANDARD QUICK	Selection of amount of back space for recording pause. STANDARD: Normally use this setting. QUICK : Compared to STANDARD, the back space becomes approximately 0.4 seconds shorter. Use this setting when you want to start shooting quickly. However, in the REGEN mode, the time code may not continue.	STAND-ARD
	b-SP	St qU		
	307: LONG PAUSE TIME	3MIN 30MIN	To select the time (minutes) before the tape protect mode (drum head rotation stopped) is engaged when the record-pause, still or stop condition continues. 3MIN : 3 minutes 30MIN : 30 minutes * When used in a cold environment, the setting will be 3 minutes regardless of the setting.	30MIN
	LGPt	03 30		
	396: BATTERY TYPE	12V 13.2V 14.4V	To be set in accordance with the used battery back type. 12V : Choose this setting when using 12V battery (12V DC Flat shape type). 13.2V : Choose this setting when using 13.2V battery (Anton-Bauer Trimpack 13, Propack 13, Magnum 13, Compack 13). 14.4V : Choose this setting when using 14.4V battery (Anton-Bauer Trimpack 14, Propack 14, Magnum 14, Compack 14). **Note:** • If this setting is neglected, the unit's display of remaining of battery power and generation of battery alarm will not work correctly. • This setting is valid when battery pack is used. It is invalid when a DC power supply is used.	12V
	bAtt	12 13 14		
	398: SSF MODE	OFF CUE MODE MARK MODE	Selection of the S.S.F. (Super Scene Finder) mode. S.S.F. function: While recording, the time code data of a desired recorded scene is stored in the unit's memory when the TAKE button on the front section is pressed. Settings cannot be changed during recording or SAVE mode. OFF : S.S.F. function is not available. CUE MODE : Selects the CUE mode. When the TAKE button is pressed, the time code data of the scene recorded at that point is stored in the memory. MARK MODE: Selects the MARK mode. When the TAKE button is pressed the first time, the time code of this point is stored as start point of the scene. When the TAKE button is pressed the second time, the time code of this point is stored as ending point of the scene. For details on the S.S.F. function, see page 66. • When the VCR Setup Menu item No. 398 S.S.F. MODE is set to CUE or MARK, the time code generator's running method is internally set to the REGEN mode.	OFF
	SSF	oF cU nr		
	399: REMOTE FF/REW MODE	FF/REW SEARCH	Specifies the operation when FF/REW signal is received from the remote connector during playback. FF/REW : FF/REW operation performed. SEARCH : Search operation performed.	FF/ REW
	rEFF	FF SH		
TIME CODE	403: U-BIT SLAVE	TC&UB TC	To set whether user's bits also should be slave-locked when slave-locking with external time code generator. TC&UB : User's bits also slave-locked TC : User's bits are not slave-locked	TC
	UbSc	on oF		
	416: NON DROP/ DROP (U MODEL)	DROP NON DROP	Selection of the time code generator's framing mode as either drop or non-drop mode. DROP : The internal time code generator runs in drop mode. Choose this setting when emphasizing the recorded time. NON DROP: The internal time code generator runs in non drop mode. Choose this setting when emphasizing the frame number.	DROP
	tcG	dF nF		
ON SCREEN	516: DISPLAY SELECT	TC CLOCK	Selection of the appearance of the counter display when the COUNTER switch is set to "TC" or "UB". TC : The time code is displayed. CLOCK: The date/time is displayed.	TC
	diSP	tc cL		

12-2 Camera Menu Screen Flow

Camera Menu Screen Flow

As illustrated below, the Camera Menu is a menu screen comprising several layers. The first layer of the CAMERA MENU screen is for choosing and setting the menus required in accordance with functions or purposes.
The unit also allows the contents of menu settings to be stored in three files (SCENE FILE A, B, OFF).

- SCENE FILE A, B.....
  By performing the FILE STORE operation on the FILE MANAGE screen, the contents of menu settings can be stored and retained in the unit. However, the SET UP menu contents are stored even if the FILE STORE operation is not performed.
  Use SCENE FILE A or B to store and retain the contents of menu settings that remain more or less fixed.
- SCENE FILE OFF.....
  Whenever you want to change the menu settings, use this SCENE FILE.
  The menu setting contents are stored in the unit even if the FILE STORE operation is not performed.

When shooting, select the file with the menu settings to be used from among the three SCENE FILE files on the CAMERA MENU screen.

CAUTION:
When controlling the unit with the camera remote control unit, REMOVE will appear in the setting value section.
In this case, menu settings cannot be made.

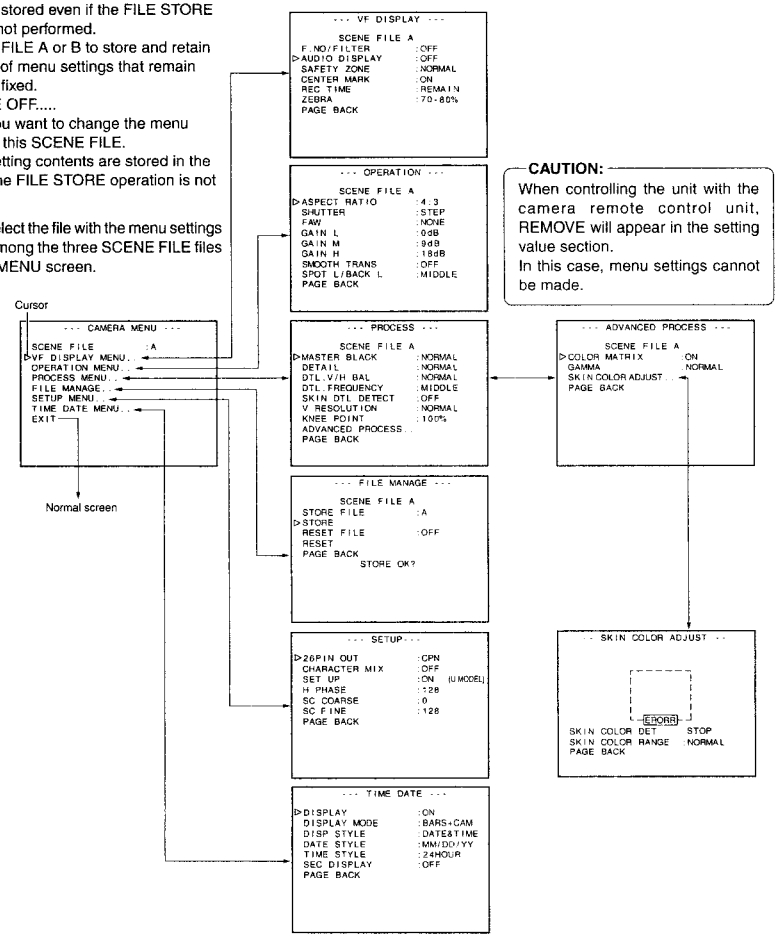

12-3 How to Select from the Camera Menu

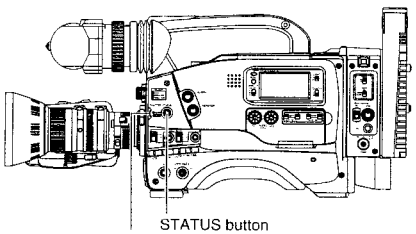

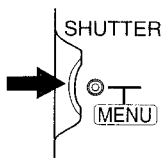

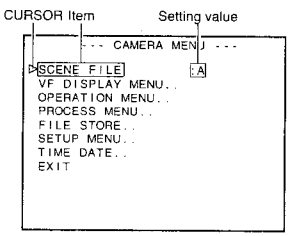

CAMERA MENU screen

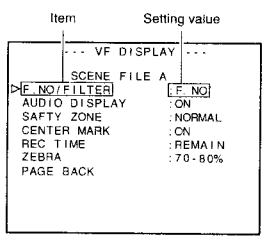

VF DISPLAY MENU screen

1. Press the STATUS button for 1 second to display the CAMERA MENU screen in the viewfinder.

2. Choose the file with the camera menu settings to be used. (SCENE FILE A, B or OFF)

① Turn the SHUTTER dial up or down to align the cursor with SCENE FILE, and then press the SHUTTER dial in the direction of the arrow.

- The area with the setting value starts blinking, and the value can now be changed.

② Turn the SHUTTER dial up or down to select the setting value. (A, B or OFF)

③ Press the SHUTTER dial in the direction of the arrow.

- The setting value stops blinking but remains lit.

3. Turn the SHUTTER dial up or down to align the cursor with the menu item to be set, and then press the SHUTTER dial in the direction of the arrow.

- The selected menu screen appears in the viewfinder.

4. Choose the menu item from the menu screen.
Turn the SHUTTER dial up or down to align the cursor with the menu item to be set, and then press the SHUTTER dial in the direction of the arrow.

- The area with the setting value starts blinking, and the value can now be changed.

5. Change the setting value.
Turn the SHUTTER dial up or down to change the setting value, and then press the SHUTTER dial in the direction of the arrow.

- The setting value stops blinking but remains lit.

■ To change multiple items, repeat steps ***4.*** and ***5.*** above.

6. Return to the CAMERA MENU screen.
Turn the SHUTTER dial up or down to align the cursor with the PAGE BACK item, and then press the SHUTTER dial in the direction of the arrow.

■ To change the settings of other menu screens, perform the operations described in steps ***3.*** to ***6.*** above.

7. If SCENE FILE A or B is selected, choose the FILE MANAGE item from the CAMERA MENU screen and perform the operations for storing a file.
☞ See "FILE MANAGE Screen" on page 82.
* It is not necessary to perform the file storage operations for changes made to the SETUP MENU.

8. Complete the CAMERA MENU setting.
Turn the SHUTTER dial up or down to align the cursor with the EXIT item on the CAMERA MENU screen, and then press the SHUTTER dial in the direction of the arrow.

- The normal screen returns in the viewfinder.

12-4 VF Display Screen

Item	Function, Operation	Variation Range	Initial Setting
F.NO/FILTER	Sets whether to display the F-number of the lens iris or filter position of the unit on status screen 1. F. NO ..... F-number is displayed. FILTER ..... Filter position is displayed. OFF ..... No display	F.NO FILTER OFF	OFF
AUDIO DISPLAY	Selects whether or not the audio indicator is displayed on the Status 1 screen. ON ..... Audio indicator is displayed. OFF ..... Audio indicator is not displayed.	ON OFF	OFF
SAFETY ZONE	Selects the safety zone setting. ☞ See "Safety Zone" on page 31.	OFF NORMAL 16:9	OFF
CENTER MARK	Selects whether or not a center mark is shown during display of safety zone. ON ..... Center mark displayed. OFF ..... Center mark not displayed. When the SAFETY ZONE item is set to OFF, "---" is displayed and this item cannot be set.	ON OFF	ON
REC TIME	Sets whether the remaining tape recording time or TIME CODE is displayed on the Status 1 screen. TC ..... TIME CODE is displayed. * The time code is displayed even if the VCR Setup Menu item No. 516 DISPLAY SELECT is set to "CLOCK". REMAIN ..... Remaining time is displayed.	TC REMAIN	REMAIN
ZEBRA	Switches the luminance level of the subject sections where the zebra pattern is displayed. Zebra patterns also displayed when color bar is displayed. 70-80% ..... Zebra pattern is displayed in sections with luminance levels between 70% and 80%. 85-95% ..... Zebra pattern is displayed in sections with luminance levels between 85% and 90%. OVER 95% ..... Zebra pattern is displayed in sections with luminance levels over 95%. OVER 100% ..... Zebra pattern is displayed in sections with luminance levels over 100%.	70-80% 85-95% OVER95% OVER100%	70-80%
PAGE BACK	The CAMERA MENU returns when the SHUTTER dial is pressed with the cursor at this position.	–	–

12-5 OPERATION Screen

Item	Function, Operation	Variation Range	Initial Setting
ASPECT RATIO	Sets the image size of the video signal. LETTER ..... LETTER BOX (16:9 aspect ratio) image output. 4:3 ..... 4:3 aspect ratio image output. **Note:** When setting ASPECT RATIO to LETTER, 16:9 screen detection ID signal will not be outputted from the Y/C OUT connector.	LETTER 4:3	4:3
SHUTTER	The SHUTTER button on the right side section is used to select STEP for fixed shutter speed or V.SCAN variable scanning rate for shooting computer monitor screens. STEP ..... Enables setting of different fixed shutter speeds. [1/100, 1/250, 1/500, 1/1000, 1/2000] (U MODEL) [1/120, 1/250, 1/500, 1/1000,1/2000] (E MODEL) VARIABLE..... Selected when shooting computer monitor screens, etc. [Variable range: 60.1 to 2084.6 Hz] (U MODEL) [Variable range: 50.1 to 2067.8 Hz] (E MODEL)	STEP VARIABLE	STEP
FAW	Selects the W.BAL switch (⓬ on page 13) position to which the FAW (Full-Time Auto White Balance Adjustment) function is to be assigned. NONE ..... FAW function is not used. A ..... FAW is assigned to the A position. B ..... FAW is assigned to the B position. PRESET ..... FAW is assigned to the PRESET position.	NONE A B PRESET	NONE
GAIN L **GAIN M** **GAIN H**	Selects the gain value in each position of the GAIN switch (❾ on page 13).	-3dB 0dB 3dB 6dB 9dB 12dB 18dB ALC	L: 0dB M: 9dB H: 18dB
SMOOTH TRANS	Smoothens the transition when the GAIN switch (❾ on page 13), or WHT.BAL switch (⓬ on page 13) is switched over and achieves gradual change in place of sudden change. However, the smooth transition function does not function when switching the GAIN switch set in ALC, FAS button and the LOLUX button. ON ..... Activates the smooth transition function. OFF..... Deactivates the smooth transition function.	ON OFF	OFF
SPOT L/ BACK L	Sets the level of auto iris when setting the AUTO IRIS switch to BACK L or SPOT L. LOW : Lowers the iris level. MIDDLE : Opens/Closes the iris by 1 step from the standard state. HIGH : Raises the iris level.	LOW MIDDLE HIGH	MIDDLE
PAGE BACK	The CAMERA MENU returns when the SHUTTER dial is pressed with the cursor at this position.	–	–

12-6 PROCESS Screen

Item	Function, Operation	Variation Range	Initial Setting
MASTER BLACK	Adjusts the pedestal level (master black), which is the reference of black. • To increase the pedestal level..... Increase the number. (UP) • To decrease the pedestal level .... Decrease the number. (DOWN)	MAX (100) 99 201 gradations to NORMAL (0) to -99 MIN (-100)	NORMAL
DETAIL	Adjusts the detail enhancement level. • To sharpen details ..... Increase the number. (UP) • To soften details ..... Decrease the number. (DOWN)	MAX (7) 6 15 gradations to NORMAL (0) to -6 MIN (-7)	NORMAL
DTL. V/H BAL	Sets the direction, horizontal (H) or vertical (V), in which stronger detail enhancement is applied. To strengthen the H enhancement ... ..Increase the number (UP). To strengthen the V enhancement ... ..Decrease the number (DOWN). **Note:** While the LOLUX function is operating, the setting value is fixed at NORMAL and "FIX" is displayed.	H-MAX (4) 3 9 gradations to NORMAL (0) to -3 H-MIN (-4)	NORMAL
DTL. FREQUENCY	Varies the detail enhancement level by changing the detail enhancement frequency. Set in accordance with the subject HIGH ..... Applies strong detail enhancement. Used to shoot subjects with fine patterns. MIDDLE ..... Applies medium detail enhancement. LOW ..... Applies weak detail enhancement. Used to shoot subjects with large patterns. **Note:** While the LOLUX function is operating, the setting value is fixed at MIDDLE and "FIX" is displayed.	HIGH MIDDLE LOW	LOW
SKIN DTL DETECT	Sets the Skin Detail function to ON or OFF. ON ..... Skin Detail function activated. OFF..... Skin Detail function not activated. ☞ See "Using the Skin Detail Function" on page 91.	ON OFF	OFF
V. RESOLUTION	Increases the vertical resolution. • NORMAL .... Vertical resolution 380 lines. • V.MAX ..... Vertical resolution 450 lines (The sensitivity is degraded and the bright sections may be colored depending on the subject.)	NORMAL V.MAX	NORMAL
KNEE POINT	Sets the knee point (brightness level) when the AUTO KNEE function is set to OFF.	80% 85% 90% 95% 100%	100%
ADVANCED PROCESS	Displays the ADVANCED PROCESS Screen. ☞ See "ADVANCED PROCESS Screen" on page 81.		
PAGE BACK	The CAMERA MENU returns when the SHUTTER dial is pressed with the cursor at this position.	–	–

12-7 ADVANCED PROCESS Screen

Item	Function, Operation	Variation Range	Initial Setting
COLOR MATRIX	Sets the color matrix OFF ..... Deactivates the color matrix function ON ..... The color reproducibility is enhanced, but noise increases. **CAUTION:** During the LOLUX operation, COLOR MATRIX is fixed to the OFF setting and "FIX" is displayed.	ON OFF	ON
GAMMA	Correction of the gamma curve to decide the reproducibility of black color. • To enhance the black color reproducibility. However, halftones will be lost for white section ..... Increase the number • When reproducibility of the black color is not so important ..... Decrease the number **CAUTION:** • During LOLUX operation or setting GAIN to 18 dB, "FIX" is displayed because GAMMA is fixed at the MIN value.	MAX (8) 7 18 gradations to NORMAL (0) to -7 MIN (-8) OFF	NORMAL
SKIN COLOR ADJUST	Pressing the SHUTTER dial once when the cursor is at this position switches the screen to display the SKIN COLOR ADJUST screen.		
PAGE BACK	The PROCESS MENU returns when the SHUTTER dial is pressed with the cursor at this position.	–	–

12-8 SKIN COLOR ADJUST Screen

Item	Function, Operation	Variation Range	Initial Setting
SKIN COLOR DETECT	Sets whether it is possible to change the color used by the Skin Tone Detail function. EXECUTE ..... Choose this setting to allow detection of the color used by the Skin Tone Detail function. STOP ..... Choose this setting to stop detection of the color used by the Skin Tone Detail function. ☞ See "Using the Skin Tone Detail Function" on page 91.	STOP EXECUTE	STOP
SKIN COLOR RANGE	The setting of this item can only be changed when the SKIN COLOR DETECT item is set to EXECUTE. This setting is for adjusting the skin color range where Skin Tone Detail functions. (When this item is selected, the area where the Skin Tone Detail function is applicable is indicated by zebra patterns on the screen.) While viewing the zebra pattern range, perform the adjustment. Increasing the range ..... Increase the number Increasing the range . ..... Decrease the number	WIDE +19 (33 gradations) to NORMAL to -11 NARROW	NORMAL
PAGE BACK	The ADVANCED PROCESS MENU returns when the SHUTTER dial is pressed with the cursor at this position.	–	–

12-9 FILE MANAGE Screen

The unit has three files that can be used for storing camera menus. The FILE MANAGE screen is for performing the operations for saving the set CAMERA MENU.

- When menu settings are made using SCENE FILE A or B, the contents of the settings will be invalid if the storage operations are not performed on this screen. However, the SETUP MENU settings will be valid even if the storage operations are not performed.
- When menu settings are made using SCENE FILE OFF, the contents are stored in the unit at the time settings are changed on each menu screen even if the storage operations are not performed.

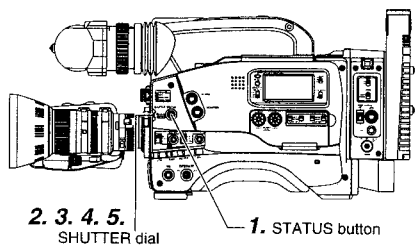

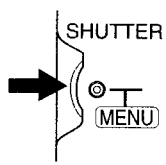

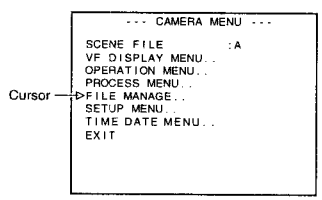

CAMERA MENU screen

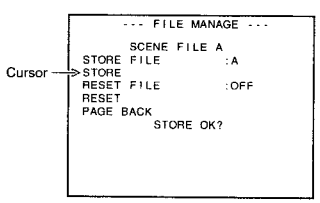

FILE MANAGE screen

Storage Operation

1. Press the STATUS button for about 1 second to display the CAMERA MENU screen.
2. Turn the SHUTTER dial to align the cursor with the FILE MANAGE item, and then press the SHUTTER dial in the direction of the arrow.
   - The FILE MANAGE screen appears in the viewfinder.
3. Choose the file to save in (A or B).
   ① Turn the SHUTTER dial to align the cursor with the STORE FILE item, and then press the SHUTTER dial in the direction of the arrow.
   ② Turn the SHUTTER dial to select the file to save in (A or B), and then press the SHUTTER dial in the direction of the arrow.
4. Save the menu settings.
   Turn the SHUTTER dial to align the cursor with the STORE item, and then press the SHUTTER dial in the direction of the arrow.
   - The "STORE OK?" message appears in the lower section of the centre of the screen.

   When the SHUTTER dial is pressed in the direction of the arrow once more, the menu settings are stored in the selected STORE FILE.
5. Close the FILE MANAGE screen
   Turn the SHUTTER dial to align the cursor with PAGE BACK, and then press the SHUTTER dial in the direction of the arrow.
   - The CAMERA MENU screen returns in the viewfinder.

Memo:

- When changing the menu settings in SCENE FILE A and saving in STORE FILE B:
  SCENE FILE B: The contents become the menu contents of the changed settings.
  SCENE FILE A: The contents become the menu contents valid before the settings were changed.
- When changing the menu settings in SCENE FILE OFF and saving in STORE FILE B:
  SCENE FILE B: The contents become the menu contents of the changed settings.
  SCENE FILE OFF: The contents become the menu contents of the changed settings.

■ Resetting the menu settings to the initial settings is also done using the FILE MANAGE screen.

☞ See "Resetting the Camera Menu Settings" on page 85.

12-10 SETUP Screen

Item	Function, Operation	Variation Range	Initial Setting
26 PIN OUT	Other than composite signals, another type of video signals can be outputted from the VTR/RM multi-pin connector. The other output video signal is selected here. Y/C : Outputs Y/C separate signals. RGB : Outputs RGB signals. CPN : Outputs component video signals.	Y/C RGB CPN	CPN
CHARACTER MIX	For selecting whether to mix characters in the MONITOR OUT video. OFF : No characters are displayed ON : Character-mixed display	OFF ON	OFF
SET UP (U MODEL)	For selecting whether to include setup signals in the camera images, external input video or VCR playback video signals. OFF : Setup signals are not included. ON : Setup signals are included. (Setup level: 7.5%)	OFF ON	ON
H PHASE	For adjusting the horizontal phase of the unit in relation to the signal (external sync signal) input through the GENLOCK/AUX IN connector on the left side of the unit. Delaying the horizontal phase of the unit in relation to the external sync signal . ..... Increase the number Speeding up the horizontal phase of the unit in relation to the external sync signal . ..... Decrease the number * Adjustment is not possible if the external sync signal is not input. Possible values are indicated by - - -.	0 to 255	128
SC COARSE	For roughly adjusting the unit's sub-carrier (SC) phase against signals (external synchronous signals) inputted to the GENLOCK/AUX IN terminal on the left side of the unit. (0°, 90°, 180°, 270°) * Adjustment is not possible if the external sync signal is not input. Possible values are indicated by - - -.	0 90 180 270	0
SC FINE	For fine adjusting the sub-carrier (SC) of the unit in relation to the signal (external sync signal) input through the GENLOCK/AUX IN connector on the left side of the unit. Rotating the sub-carrier clockwise in relation to the external sync signal ..... Increase the number Rotating the sub-carrier anticlockwise in relation to the external sync signal ..... Decrease the number * Adjustment is not possible if the external sync signal is not input. Possible values are indicated by - - -.	0 to 255	128
PAGE BACK	The CAMERA MENU returns when the SHUTTER dial is pressed with the cursor at this position.	–	–

12-11 TIME DATE screen

Item	Function, Operation	Variation Range	Initial Setting
DISPLAY	For setting whether to display the time and date on the viewfinder. OFF : Time and date are not displayed. ON : Time and date are displayed. When setting to ON, the time and date are recorded on the upper of left of the video.	OFF ON	OFF
DISPLAY MODE	For selecting the mode for displaying the time and date on the viewfinder. BARS+CAM : Time and date are displayed when outputting color bar signals or camera images. BAR : Time and date are displayed when outputting color bar signals. CAM : Time and date are displayed when outputting camera signals. "- - -" is displayed when DISPLAY is set to OFF, and the setting will be unavailable.	BARS+CAM BAR CAM	BARS+CAM
DISP STYLE	For selecting the format of the time and date display. DATE&TIME : The time and date are displayed. DATE : The date is displayed. TIME : The time is displayed. "- - -" is displayed when DISPLAY is set to OFF, and the setting will be unavailable.	DATE&TIME DATE TIME	DATE&TIME
DATE STYLE	For selecting the format of the date display. YY/MM/DD : Displays in the format of year/month/date. MM/DD/YY : Displays in the format of month/date/year. DD/MM/YY : Displays in the format of date/month/year. "- - -" is displayed when DISPLAY is set to OFF, and the setting will be unavailable.	YY/MM/DD MM/DD/YY DD/MM/YY	MM/DD/YY (U) DD/MM/YY (E)
TIME STYLE	For selecting the format of the time display. 24 HOUR : Displays the time using the 24 hour system. 12 HOUR : Displays the time using the 12 hour system. "- - -" is displayed when DISPLAY is set to OFF, and the setting will be unavailable.	24 HOUR 12 HOUR	24 HOUR
SEC DISPLAY	For selecting whether to display the seconds in the time display. OFF : Seconds are not displayed. ON : Seconds are displayed. "- - -" is displayed when DISPLAY is set to OFF, and the setting will be unavailable.	OFF ON	OFF
PAGE BACK	When the cursor is at this position, pressing the SHUTTER dial once will return the unit to the CAMERA MENU screen.	–	–

12-12 Resetting of Camera Menu Setting Values

Using the FILE MANAGE screen, the CAMERA MENU settings can be reset to the initial setting values. On the FILE MANAGE screen, select the file of the CAMERA MENU to be reset, and then perform the resetting operation.

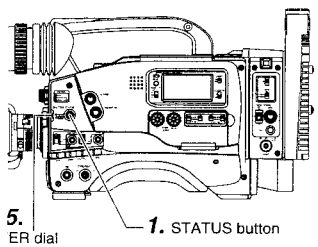

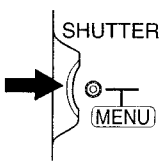

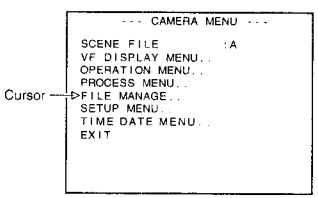

CAMERA MENU screen

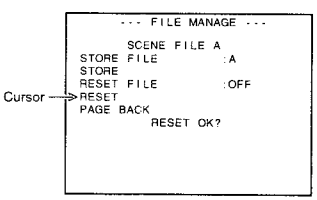

FILE MANAGE screen

Reset Operation

1. Press the STATUS button for about 1 second to display the CAMERA MENU screen.

2. Turn the SHUTTER dial to align the cursor with the FILE MANAGE item, and then press the SHUTTER dial in the direction of the arrow.
- The FILE MANAGE screen appears in the viewfinder.

3. Choose the file of the CAMERA MENU to be reset (A, B, OFF or ALL)
- If ALL is selected, all the CAMERA MENU files will be reset.

① Turn the SHUTTER dial to align the cursor with the RESET FILE item, and then press the SHUTTER dial in the direction of the arrow.

② Turn the SHUTTER dial to select the file to be reset, and then press the SHUTTER dial in the direction of the arrow.

4. Reset the camera menu settings.

① Turn the SHUTTER dial to align the cursor with the RESET item, and then press the SHUTTER dial in the direction of the arrow.
- The "RESET OK?" message message appears in the lower section of the centre of the screen.

② When the SHUTTER dial is pressed in the direction of the arrow once more, the CAMERA MENU settings of the selected file are reset to the initial settings.

5. Close the FILE MANAGE screen

Turn the SHUTTER dial to align the cursor with PAGE BACK, and then press the SHUTTER dial in the direction of the arrow.
- The CAMERA MENU screen returns in the viewfinder.

13. FEATURES OF THE CAMERA SECTION

13-1 Full-Time Auto White Balance (FAW)

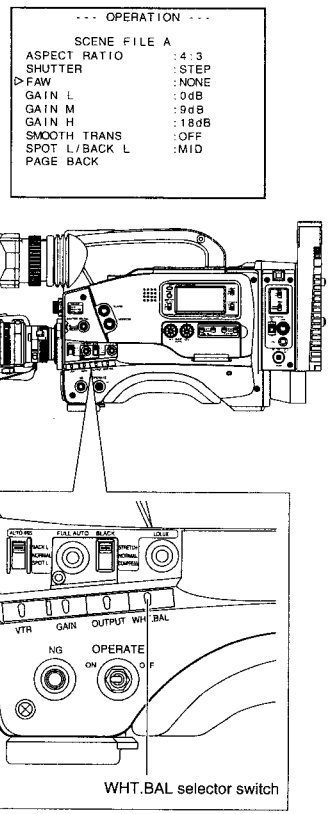

The FAW function adjusts the white balance value automatically as the lighting condition changes.

This mode is convenient when you have no time to adjust the white balance or when the camera is moved frequently in and out of places under different lighting conditions.

Setting procedure

The FAW function can be activated with item "FAW" on the OPERATION Menu.
This item allows allocation of the FAW function to the A, B or PRST position of the WHT.BAL selector switch.
☞ See "OPERATION Screen" on page 79.

CAUTION:

The FAW (Full-time Auto White balance) function cannot provide optimum white balance with a subject outside the FAW adjustment range, for example when it contains only a single color or not enough white color.

13-2 IRIS (Brightness) Adjustment

ADJUSTMENT OF LENS IRIS

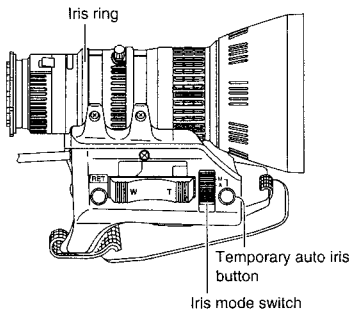

The lens iris can be adjusted using any of the following three methods.

- **Automatic adjustment**
  Set the iris mode switch to "**A**" (Auto).
  The iris is adjusted automatically according to the brightness of the object.
- **Manual adjustment**
  Set the iris mode switch to "**M**" (Manual).
  The iris can be adjusted manually by rotating the iris ring.
- **Temporary auto iris adjustment**
  During manual iris adjustment, the auto iris adjustment mode is activated only while this button is held depressed.

■ **Changing the auto iris adjustment setup**

Under special lighting conditions such as backlight, it is often appropriate to change the value set by the auto iris adjustment.
This can be done by the following methods.
• Setting the AUTO IRIS LEVEL switch of the camera
☞ See "SWITCH FUNCTIONS" on page 90.

ZEBRA PATTERN DISPLAY DURING MANUAL ADJUSTMENT

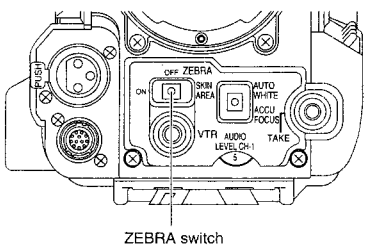

ZEBRA switch

By setting the ZEBRA switch to **ON**, oblique stripes (zebra pattern) can be displayed in the sections with a luminance level of 70% to 80% or sections with levels over 100% in the viewfinder.
The zebra pattern can be used as a reference for manual iris adjustment.
When adjusting the iris manually, adjust it so that the zebra patterns are displayed in the section that you want to stress in the subject.

- When CHARACTER of the Camera SETUP Menu screen is set to ON, the zebra pattern will also appear in the MONITOR OUT connector video.
- The zebra pattern will also appear during color bar output when the ZEBRA switch is set to ON.
- The initial setting is 70 to 80%. However, using the "ZEBRA" setting on the VF DISPLAY MENU, zebra patterns can be displayed in the sections with a luminance level of 85% to 95%, over 95% and over 100%.

☞ See "VF DISPLAY MENU Screen" on page 78.

13-3 Shooting the Screen Image on a Computer Monitor

Video monitor

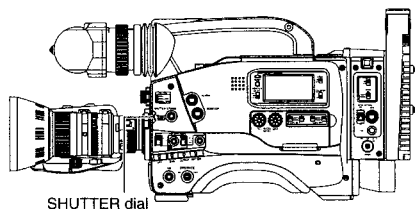


```
--- OPERATION ---
SCENE FILE A
ASPECT RATIO      :4:3
▷SHUTTER          :VARIABLE
FAW               :NONE
GAIN L            :0dB
GAIN M            :9dB
GAIN H            :18dB
SMOOTH TRANS      :OFF
SPOT L/BACK L     :MIDDLE
PAGE BACK
```
OPERATION MENU screen

■ Outline

The following operation allows the alignment of the shutter speed of the camera with the variable scanning rate of a computer monitor or display.
When a computer monitor screen or display is shot with the camera, a bright horizontal line indicating excessive exposure is displayed in cases when the scanning rate of the monitor is faster than the shutter speed of the camera. A dark horizontal line indicating insufficient exposure is displayed in cases when the monitor's scanning rate is slower than the camera's shutter speed.
The scanning frequency of a monitor varies due to various reasons during the computer operation. Adjust the scanning rate to obtain a stable image while observing the image in the viewfinder.

■ Variable Scan [V.SCAN]

- **Basic operation**
  Set the SHUTTER item on the OPERATION MENU screen to VARIABLE. Then move the SHUTTER knob upwards or downwards to change the shutter speed.
  (The speed is displayed on the viewfinder screen.)
- **Compatible frequencies**
  The variable scan function is compatible with scanning frequencies in the following range.
  60.1 Hz to 2084.6 Hz (U MODEL)
  50.1 Hz to 2067.8 Hz (E MODEL)

CAUTION:
This function is not compatible with slow-speed computer monitors with a vertical scanning speed of 50 Hz.

13-4 Gain (Sensitivity) Adjustment

The gain should be switched when the brightness is insufficient due to poor lighting conditions.

GAIN SWITCHING

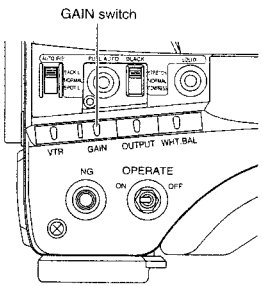

This switch allows the gain to be boosted when the illumination of the subject is insufficient.

Switch Position	Factory-Set Gain
L	0dB
M	9dB
H	18dB

When the GAIN switch is switched, the newly set gain is displayed for about 2 seconds on the Status 0 or Status 1 screen in the viewfinder.
Set it to L (0 dB) in normal use.

- The gain set for each of the switch positions can be changed with "GAIN" on the OPERATION MENU screen.
- It is also possible to use the ALC function that varies the gain automatically.
  ☞ See page 79 for details.
- To make the gain transition smoother, set "SMOOTH TRANS" on the OPERATION MENU to "ON".
  ☞ See page 79.
  However, note that the SMOOTH TRANS function is not available if gain is set to ALC.

CAUTION:
When gain is set to "ALC", gain is boosted automatically as the illumination becomes darker. However, noise will increase a little because the screen becomes brighter as the ALC (Auto Level Control) function boosts the gain more than in the case of manual adjustment.

GAIN BOOST UNDER LOLUX CONDITION

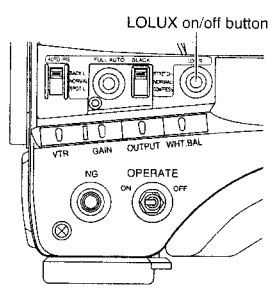

The LOLUX button is used when the illumination is still insufficient after compensating with the GAIN switch.
Press the button to enter the LOLUX mode in which the gain is boosted by about 33 dB.
"LOLUX ON" is displayed for about 2 seconds on the Status 0 or Status 1 mode screen in the viewfinder.
Pressing the button again cancels the LOLUX mode.
"LOLUX OFF" is displayed for a few seconds.

- When the LOLUX function is in use, the image definition on the screen will degrade to increase residual images, but this is not a malfunction.

[Relationship between gain, iris and shutter]

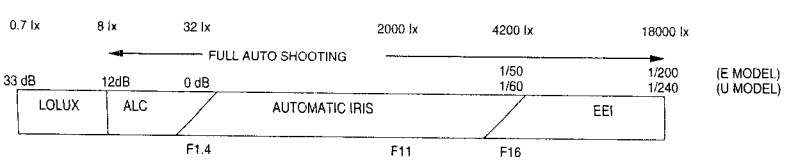

13-5 Switch Setup According to Illumination and Subject

Various switch settings are performed to accommodate the conditions of the illumination and the subject when shooting.

SWITCH FUNCTIONS

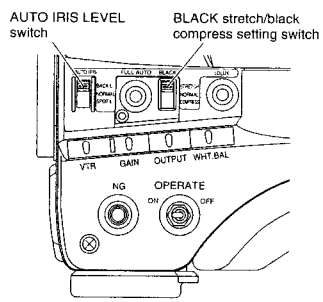

①AUTO IRIS LEVEL switch

This switch allows the reference value for the auto iris adjustment to be changed according to the lighting condition.

BACK. L : When the subject is in backlit conditions.
Opens the iris wider than the standard setting.
NORMAL: Normal lighting condition.
SPOT. L : When the subject is under a spotlight.
Closes the iris narrower than the standard setting.

- The level of auto iris can be set in SPOT L/BACK L of the Camera OPERATION menu screen when setting the AUTO IRIS switch to BACK L or SPOT L. ☞ See page 79.

②BLACK stretch/black compress switch

This switch makes the image easier to see by varying the black gain.

BLACK STRETCH : Boosts the gain of black areas to improve the reproducibility of black.
NORMAL : Normal black gain.
BLACK COMPRESS : Attenuates the gain of black areas to make the image sharper.

FULL AUTO SHOOTING (FAS) FUNCTION

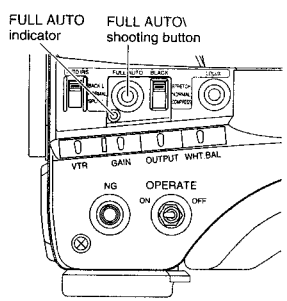

The FAS function provides a wide range of compatibility with shooting conditions that varies as you move between indoors and outdoors or between bright and dark locations. It eliminates the need to change the switch and filter positions every time you move.
The FAS function provides an integrated control of the ALC (Automatic Level Control), Auto iris and FAW (Full-time Auto White balance) functions.

Operation

1. Simply press the FULL AUTO button to enter the FAS mode, in which the FULL AUTO indicator lights and "FAS" is displayed to the right in the viewfinder.
2. Pressing the FULL AUTO button again cancels the FAS mode and turns the FULL AUTO indicator off.

CAUTION:
- The FAS function will not operate during external video signal input.
- When the power is turned on while the camera is in the FAS mode, it takes about 10 seconds before the automatic adjustment of FAS is completed.
- In the FAS mode, the audio recording level is not set automatically to the AUTO mode.
  To select the AUTO mode, set the AUTO/MANUAL switch of the VCR section to AUTO.

■ Automatic Setting Contents

- If you have been displaying the color bars, the screen is switched automatically to the camera image.
- The auto iris adjustment mode is entered even if the iris mode switch of the lens is set to manual.
- The GAIN switch and WHT.BAL switch settings are defeated in the FAS mode.
- The LOLUX button setting is active even in the FAS mode. However, the ALC and EEI are defeated in the LOLUX mode, in which only the auto iris adjustment and FAW are used.
- All of the previous setting contents are recalled when the FAS mode is cancelled.
- The SMOOTH TRANS function is defeated during switch to the FAS function.

13-6 How to Use Skin Tone Detail

The contour emphasis in the skin color areas of the video signal can be controlled and made to appear gentle and smooth.

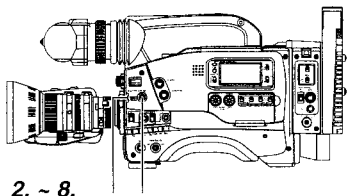

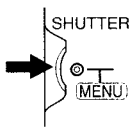

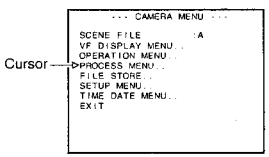

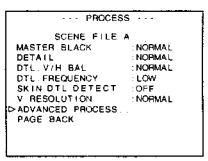

PROCESS screen

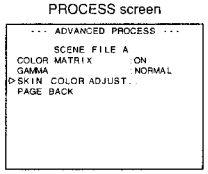

ADVANCED PROCESS screen

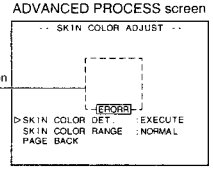

SKIN COLOR ADJUST screen

SKIN COLOR ADJUST screen

■ Setting the Color and Range of the Skin Tone Detail Function

1. Press the STATUS button for about 1 second to display the CAMERA MENU screen.

2. Turn the SHUTTER dial downward to align the cursor (>) with the PROCESS item. Then press the SHUTTER dial in the direction of the arrow to display the PROCESS screen.

3. Turn the SHUTTER dial downward to align the cursor (>) with the ADVANCED PROCESS item. Then press the SHUTTER dial in the direction of the arrow to display the ADVANCED PROCESS screen.

4. Turn the SHUTTER dial downward to align the cursor (>) with the SKIN COLOR ADJUST item. Then press the SHUTTER dial in the direction of the arrow to display the SKIN COLOR ADJUST screen.
- The frame shown on the screen indicates the detection area of the skin tone detail function.

5. When the cursor (>) is aligned with the SKIN COLOR DET. item, the SHUTTER dial is pressed in the direction of the arrow and EXECUTE selected, the skin color detection mode is activated.

6. Shoot so that the area with the color that you want to detect is brought within the detection area frame. To decide on the color for the detection, press the SHUTTER dial to set SKIN COLOR DET. to STOP.
- The areas recognized by the skin tone detail function appear with superimposed zebra patterns.
- If the color is not recognized as a color that the skin tone detail function works with, "ERROR" is displayed on the screen.

7. If you want to change the color range recognized by the skin tone detail function, perform the following operations. Set the SKIN COLOR DET. item to EXECUTE.
① Turn the SHUTTER dial to align the cursor (>) with SKIN COLOR RANGE, and then press the SHUTTER dial in the direction of the arrow.
➡ The area with the setting value starts blinking, and the value can now be changed.
② Turn the SHUTTER dial up or down to widen or narrow the color range.
• Adjust the range while observing the zebra patterns.
③ To decide the color range, press the SHUTTER dial in the direction of the arrow.
➡ The setting value stops blinking but remains lit.

8. To stop the SKIN COLOR ADJUST operation, align the cursor (>) with BACK PAGE and press the SHUTTER dial in the direction of the arrow.

13-6 How to Use Skin Tone Detail (Cont'd)

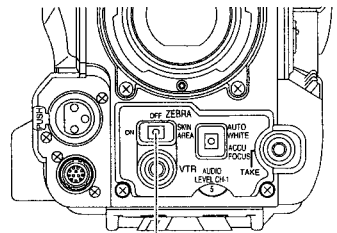

ZEBRA switch

■ Confirming the color tone area adjusted with the Skin Tone Detail function

When the ZEBRA switch on the front section is pressed to the "SKIN AREA" side, the color tone areas adjusted with Skin Tone Detail are displayed in the viewfinder.

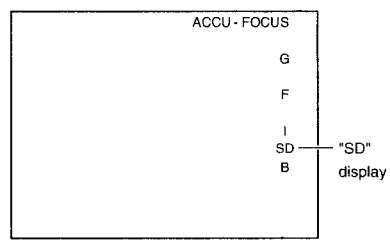

STATUS 0

■ Using the Skin Tone Detail Function

To use the skin tone detail function set on the SKIN COLOR ADJUST screen, set the SKIN DTL DETECT item on the PROCESS menu to "ON".

While the Skin Tone Detail function operates, the "SD" indicator is displayed on the Status 0 and Status 1 screen in the viewfinder.

13-7 Connecting the Local Remote Control Unit (RM-LP55/RM-LP57)

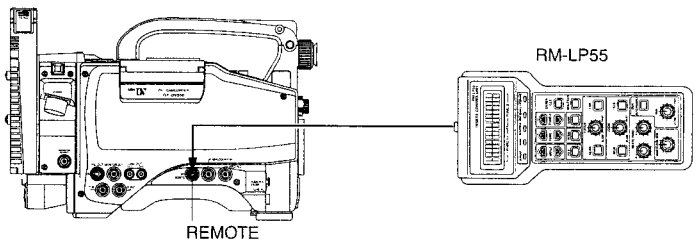

It is possible to set the switch functions of the camera section using the local remote control unit (RM-LP55/RM-LP57)

Connection

Connect the local remote control unit cable to the REMOTE connector of this unit.

Settings

- Set VTR Setup menu No. 050 REMOTE SELECT of this unit to LOCAL.
- When also using the DV terminal, set VTR Setup menu No. 050 REMOTE SELECT to IEEE1394.

CAUTION:

When setting VTR Setup menu No. 050 REMOTE SELECT to IEEE1394 + RS232C, the local remote control unit will be inoperable.

Operation

When the OPERATE switch of the local remote control unit is set to ON, the local remote control unit will be operable.

■ Unavailable functions

The following functions are unavailable from the local remote control unit.

- RM-LP55 : GAIN ALC setting
  SHUTTER EEI setting
  ZOOM
  FOCUS
  SC COARSE
  SC FINE
  H PHASE
  GAMMA
  TITLE
  TITLE SET
- RM-LP57 : SHUTTER EEI setting
  GAIN ALC setting
  SC COARSE
  SC FINE
  H PHASE

Memo:

- If the switch functions for this unit and the local remote control unit are the same, the switch function of the local remote control unit will have priority.
- The IRIS AUTO/MANUAL setting will be the local remote control unit switch setting regardless of the lens section switch setting.
- H. PHASE, SC COARSE and SC FINE cannot be adjusted using the local remote control unit.
- When RM-LP55 is connected, the shutter speed displayed on RM-LP55 may slightly differ from the speed displayed on this unit.

13-8 Connecting the camera remote control unit

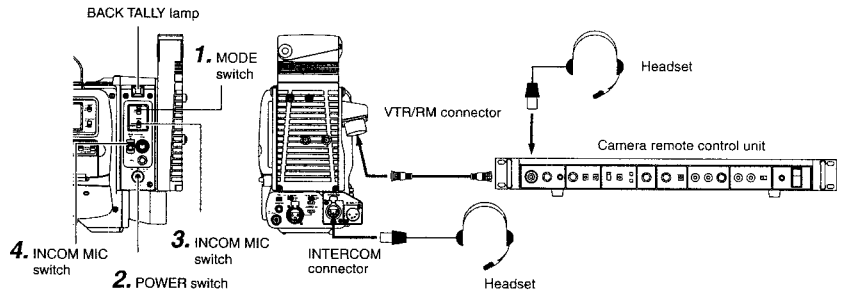

The unit can be remotely controlled using the camera remote control unit. Use the following available products.

■ Camera remote control unit
- RM-P200 ..... Maximum cable length is 100m. (Not available for 4-inch viewfinders.)

CAUTION:

To use the camera remote control unit RM-P200, internal adjustments of the RM-P200 are required. It is, therefore, mandatory that you contact the nearest JVC-authorized service agent for inquiry about the adjustments.

- RM-P300 ..... Cable length is 200m only.

■ Intercom headset
- KA-310

Connection

- Connect the camera remote control unit to the VTR/RM multi-pin connector.
- When using the intercom headset, connect the headset to the INTERCOM connector.
- To check the prompter output of the camera remote control unit, connect a monitor to the PROMPTER OUTPUT connector.

Settings

1. Set the MODE switch to RM.

2. Select the power source of this unit using the POWER switch. When supplying power from the power supply of the camera remote control unit through the VTR/RM multi-pin connector, set the POWER switch to RM.

3. Set the INCOM MIC setting switch according to the intercom headset microphone type (carbon-type or dynamic-type microphone).

4. Use the INCOM MIC switch to set whether to use the microphone of the intercom headset.
- The microphone of the headset will become available for use when setting to ON and the volume can be adjusted by turning the volume knob.

5. Composite video signals of the camera are constantly outputted from the VTR/RM multi-pin connector. Other than this signal, another type of video signals can be outputted. The output signal is selected in 26 PIN OUT of the Camera SETUP menu screen.
(Y/C, RGB or component video signal)

Memo:

- External input video signals will not be outputted from the VTR/RM multi-pin connector even when setting the VTR INPUT switch to AUX.
- Playback video of the VCR will not be outputted from the VTR/RM multi-pin connector.
- Call signals will be sent to the operator of the camera remote control unit while the CALL button is held down. During this time, the BACK TALLY lamp will blink. The BACK TALLY lamp will blink when the call signal is received.
- The screen will distort when inputting sync signals to both the main unit and camera remote control unit.
- When the power is set to ON during input of external synchronous signals, the screen may shift vertically for a few seconds; however, this is not a malfunction of the unit.
- Read the instruction manual of the camera remote control unit for the correct usage.

13-8 Connecting the camera remote control unit (Cont'd)

Operation

Set the POWER switch of the camera remote control unit to ON. About 30 seconds after turning the power on, the camera remote control unit will be operative.

Memo:

After the POWER switch is turned on, the camera remote control unit takes about 30 seconds to prepare for correct communication with this unit.

■ Unavailable functions

The following functions are unavailable from the camera remote control unit.

- RM-P200 : AUTO SET
  NEGA
- RM-P300 : AUTO SET/BLACK
  NEGA
  ABL

Memo:

- If the switch functions for this unit and the camera remote control unit are the same, the switch function of the camera remote control unit will have priority.
- The IRIS AUTO/MANUAL setting will be the camera remote control unit switch setting regardless of the lens section switch setting.
- When using the camera remote control unit with the local remote control unit (RM-LP55/RM-LP57), the local remote control unit settings will have priority. ☞ See page 93

For servicing
See the service manual page 1-17, "1.11 FUNCTION OF INTERNAL SWITCHES".

■ TALLY lamp display when the camera remote control unit is connected.

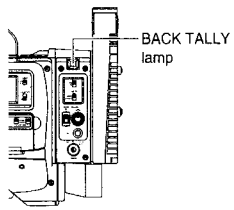

When the camera remote control unit is connected, the viewfinder (VF) FRONT TALLY lamp, REC/ALARM lamp inside the viewfinder and the BACK TALLY lamp are displayed as shown below.

	VF TALLY	BACK TALLY		
		BLINK*	ON*	OFF*
Preview signals of camera remote control unit	—	Green light on	Green light on	Off
TALLY signals of camera remote control unit	Red light on	Red light on	Red light on	Off
CALL signals of camera remote control unit	Red light flashing	Red light flashing	Red light flashing	Off
CALL signals of this unit	—	Red light flashing	Red light flashing	Off

* The display method for the BACK TALLY lamp is set in VTR Setup menu No. 082 BACK TALLY MODE.
☞ See page 74

- Lamps are off for all other conditions.

14. OTHERS

14-1 Troubleshooting

Warnings concerning problems with the unit are provide in the form of indicators, display indications and monitor tones.
The warnings are of the following two types.
- Alarm indications : These indications are given to provide warning on the status of the unit, for example when the tape or battery pack should be replaced.
- Error code display : In case an error occurs during operation, the unit self-diagnoses the cause and shows the diagnostics results on the counter display. When this happens, the unit stops operation automatically or ejects the videocassette.

CAUTION:

Alarms and error codes of the external VCR connected to the VTR/RM multi-pin connector will not be displayed.

ALARM INDICATIONS

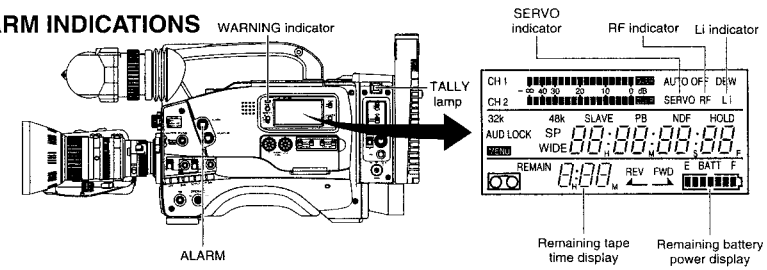

When an alarm is indicated, the unit operates in the following ways.

Alarm Indicator on VCR Display	Symptom	VCR Operation and Remedy
DEW	Indicates dew formation (condensation).	Operation : The VTR rejects operation. Remedy : Leave the power on, and wait until the indication disappears.
SERVO (Counter display) "SYnc inh"	Lights in the case of troubles with the drum servo. Lights when the input sync signal is disturbed or the unit is subjected to physical shock. (Displayed only during recording or during playback of unrecorded portions.)	Operation : During recording the mode becomes the stop mode. During playback, playback of the disturbed video image continues. Remedy : • Also check the input sync signal. • Signal is disturbed when the unit is subject to a violent shock. In other cases, please consult the person in charge of professional video equipment at your nearest JVC-authorized service agent.
RF (Counter display) "HEAd CLoG"	Lights in case of video head clogging. (Head clogging is detected and indicated during playback and recording check using the RET button on the lens section.)	Operation : Continues. Remedy : Clean the head with the special head cleaning tape. (See "Precautions for Use of Head Cleaning Tape" on page 8.)
(Counter display) Pc TAPE	Improper cassette type	Operation : Operation stops. Remedy : Use recordable MiniDV cassette for recording video and audio.
(Counter display) 1394 inh	• No signal is input to the DV connector. • Copy-guarded signals are input.	Operation : Operation stops. Remedy : • Input signals to the DV connector. • Copy-guarded signals cannot be recorded.
Li	Lights when the lithium battery for backup of time code generator and date/time data is exhausted.	Operation : Continues. Remedy : Replace with a new lithium battery. See page 36.
Remaining tape time REMAIN 0:07 M	* About 2 minutes before tape end. (The TALLY lamp and alarm sound are activated only in the record mode.)	Operation : Continues.
	* When the tape has ended completely.	Operation : Stops.
Remaining battery power E BATT	When the remaining battery capacity is low.	Operation : Continues. Remedy : Replace battery pack early.
E BATT	When the battery capacity drops to an insufficient level.	Operation : Stops automatically. The camera may generate abnormal signals. This is not a malfunction.

14-1 Troubleshooting (Cont'd)

Alarm Indications (Cont'd)

Depending on the alarm conditions, the warning indicators in the LCD display, the WARNING indicator, the TALLY lamp, alarm tones and the viewfinder appear as shown in the following table.

Alarm Indications				Viewfinder		
LCD Display	WARNING Indicator	TALLY Lamp	Alarm Tone	WARNING Lamp: REC Lamp	WARNING Lamp: BATT. Lamp	On Screen Display
"DEW" indicator	✣	✣	▮▮▮	✣	—	VTR WARNING (DEW)
"SERVO" indicator "SYnc inh" indicator	✣	✣	▮▮▮	✣	—	VTR WARNING (SERVO)
"RF" indicator "HEAd CLoG" indicator	✣	✣	▮▮▮	✣	—	VTR WARNING (HEAD)
	(Only during the interval from when the VTR trigger button is pressed and until recording starts.)					
"Li" indicator	—	—	—	—	—	—
Remaining tape time REMAIN 0:02	◑	◑ (In record mode only)	▮	◑	—	TAPE NEAR END About 2 min. before tape end.
	●	✣	▮▮▮	✣	—	TAPE END
Remaining battery power E BATT	◑	◑ (Except for play /search mode)	▮	◑	●	The voltage display of status screen 1 will flash.
E BATT	●	✣	▮▮▮	✣	●	The voltage display of status screen 1 will flash.

The WARNING indicator normally lights green or orange to indicate that operation is possible.
The color changes to red to indicate an alarm and appears as described above.
The alarm tone output is superimposed on the audio signal output from the monitoring loudspeaker or EARPHONE jack.
The volume of the alarm tone can be adjusted with the ALARM volume control.

Display symbols

● : Steady lighting. ◑ : Blinking once per second. ✣ : Blinking 4 times per second.
▮▮▮ : Continuous sound. ▮ ▮ : Sound interrupted once per second. ▮▮▮▮ : Sound interrupted 4 times per second.

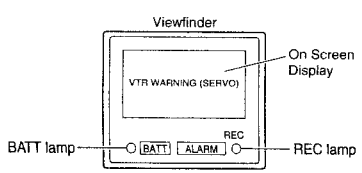

14-1 Troubleshooting (Cont'd)

WARNINGS IN VIEWFINDER

Viewfinder Warning Lamps

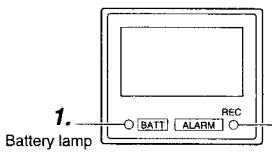

1. BATTERY lamp
This red lamp lights under the following circumstance.
Lights red : • When the battery voltage becomes too low for the camera to operate.

2. REC/ALARM lamp
This lamp lights or blinks green under the following conditions.
Lights Green : • While recording
Blinks Green : • During the interval where the unit switches from record-pause to record mode.
• Immediately before the tape runs out or has run out.
• If the unit malfunctions.

■ Character display warnings:

TAPE NEAR END: Less than 3 minutes tape remaining.
TAPE END : The tape has run out.

■ Function Failures

When an abnormality occurs in the unit or an improper operation is performed, one of the following warning messages will appear in the viewfinder.

- **VTR WARNING (HEAD):**
Lights in case of video head clogging.
(Head clogging is detected and indicated during playback and recording check using the RET button on the lens section.)
- **VTR WARNING (SERVO):**
Lights in the case of drum servo trouble during recording.
- **VTR WARNING (DEW):**
Lights when condensation occurs in the unit.
- **VTR WARNING (STOP):**
Lights in case the unit stops operating.
- **VTR WARNING (HARD):**
Lights when abnormality occurs in the unit.
- **VTR WARNING (REW):**
Lights when abnormality occurs with tape rewind operation.
- **CLOSE CASSETTE COVER:**
Lights when the cassette cover has not been closed.
- **REC INHIBIT:**
Indicated when an unrecordable videocassette (the switch on the back of the cassette is set to SAVE) is loaded.
Displayed when copy-guarded IEEE1394 signals are inputted.
- **NO TAPE:**
Lights when the VTR trigger button is pressed with no videocassette loaded.

■ Warnings on the White Balance Function

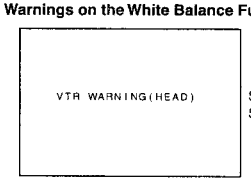

Status 0 or
Status 1 mode

- **AUTO WHITE A, B**
NG: OBJECT Improper object.
• Check whether the object being shot is white enough.
• Check that selected filter suits the illumination conditions.
- **AUTO WHITE A, B**
ERROR: LOW LIGHT Amount of incident light insufficient.
• Check to see if it is necessary to increase illumination or perform iris adjustment.
- **AUTO WHITE A, B**
ERROR: OVER LIGHT Amount of incident light excessive.
• Check to see if illumination and iris adjustment are appropriate.

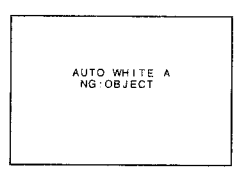

14-1 Troubleshooting (Cont'd)

In the case of troubles occurring during operation of the GY-DV550, it performs a self-test to identify the cause and displays the result in the form of an error code. The error code consists of the "main code" which indicates its contents and the "sub-code" which indicates the details. Depending on the status of the GY-DV550 at this time, indications may also appear on the LCD display, the WARNING indicator may activate and the alarm tone may be generated.
In the viewfinder, the "VTR WARNING (DEW)" indication appears when condensation is detected, and the "VTR WARNING (STOP)", "VTR WARNING (HARD)" or "VTR WARNING (REW)" indication appears depending on the contents of the error code when some of the other error codes are displayed.

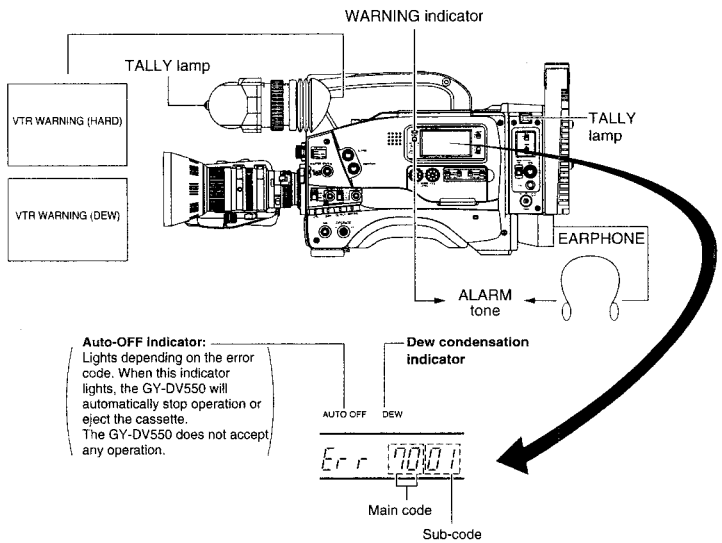

WARNING indicator	Alarm Tone	Display	GY-DV550 Operation
Red, blinking	Continuous	"Error code"	• Automatically ejects the cassette. It can be inserted again.
		"Error code" plus "AUTO OFF"	• Automatically stops operation or ejects the cassette. (Auto OFF) * The GY-DV550 does not accept any operation.
Red, blinking	Intermittent	"DEW "	• Dew condensation inside the unit. The GY-DV550 does not accept any operation until the DEW indicator disappears from the display.

* In the Auto OFF status, it is impossible to operate the GY-DV550. This condition can be cancelled by switching the OPERATE switch OFF and then switching it ON again. If the same problem occurs again after the power is turned ON, there may be something wrong with the GY-DV550. Please consult the person in charge of professional video equipment at your nearest JVC-authorized service agent.
* If the display operates abnormally, Press the RESET switch inside the lithium battery case, and then set the OPERATE switch to ON again. (☞ See page 36)
Please note that pressing the RESET switch will also reset the time code data and time and date data.

The GY-DV550 is a microcomputer-controlled piece of equipment, which may malfunction due to external noise or interference. In this case, set the OPERATE switch to OFF, remove the lithium backup battery, and then set the OPERATE switch to ON again after a few minutes.

14-1 Troubleshooting (Cont'd)

TROUBLES WITH ERROR CODE OUTPUTS

Error Code	Error Details	GY-DV550 Operation	Remedy
3200	Tape loading impossible.	Operation stops. All operations are rejected.	Switch the power OFF and then switch it back ON. However, the tape may be damaged depending on the situation. Please consult the person in charge of professional video equipment at your nearest JVC-authorized service agent.
3300	Tape unloading impossible.	Operation stops. All operations are rejected.	
4100	Irregular eject operation.	Operation stops. All operations are rejected.	
4200	Cassette housing abnormality.	Operation stops. All operations are rejected.	
5605	Tape is cut.	Operation stops. All operations are rejected.	Open the cassette cover by using the EJECT switch and then switch the power ON again.
5606 to 5607	Tape is slack.	Operation stops. All operations are rejected.	Switch the power OFF and then switch it back ON. However, the tape may be damaged depending on the situation. Please consult the person in charge of professional video equipment at your nearest JVC-authorized service agent.
5702	Tape end sensor error.	Operation stops. All operations are rejected.	
5802	Tape beginning sensor error.	Operation stops. All operations are rejected.	
7001	Drum rotation stopped.	Operation stops. All operations are rejected.	
7101	Capstan rotation stopped.	Operation stops. All operations are rejected.	
7202 to 7203	Supply reel rotation error.	Operation stops. All operations are rejected.	
7302 to 7303	Take up reel rotation error.	Operation stops. All operations are rejected.	
7305	Irregular tape winding when unloading.	Operation stops. All operations are rejected.	

For servicing
See the service manual page 1-29, "1.19 WARNING CODES".

14-1 Troubleshooting (Cont'd)

TROUBLES WITHOUT ERROR CODE OUTPUTS

Symptoms	Remedy
Power cannot be switched ON.	• Is power supply connected properly? • Is battery pack recharged? • When the lithium battery is depleted, it may not be possible to turn on the power. • Was the power turned ON immediately after being turned OFF? Wait at least 5 seconds before turning the power ON again once it has been turned OFF.
Operation buttons on the GY-DV550 don't work.	• Check whether the VCR Setup Menu item No. 050 REMOTE SELECT has been set to "IEEE1394" or "RS232C". If so, change the setting to "LOCAL". • Is the cassette cover open? The GY-DV550 remains inoperative as long as the cassette door is open.
Recording is not possible.	• Is switch on cassette set to REC? If it is set to SAVE, set it to REC.
Noise interferes with playback video.	• Video head may be clogged with dirt. Clean head with the special head cleaning tape. (See "Precautions for Use of Head Cleaning Tape" on page 8.)
Sound and picture are disturbed during playback.	• Is the sync signal input to the GENLOCK IN connector disturbed? If so, check and remedy the input sync signal.
Time code data is not shown as on-screen-display.	• Time code data is not shown as on-screen-display during recording or playback. The data is shown only on the counter display.
Time code and user's bit data are not shown on the counter display.	• Is the COUNTER switch set to "CTL"? If so, set the switch to "TC" or "UB".
Remaining battery power display is incorrect. Battery alarm is displayed and the GY-DV550 enters the non-operating mode even when a fully charged battery is used.	• The VCR Setup Menu item No. 396 BATTERY TYPE may not be set correctly in accordance with the type of battery in use. If the menu item setting is incorrect, set it correctly using the VCR setup menu item BATTERY TYPE. • Is the battery old?
Cassette cannot be ejected after the power is turned ON.	• The capacity of the power supply may be insufficient. Check the power voltage.
Viewfinder image looks dark or unclear.	• Adjust the viewfinder's contrast and bright controls. • Is the filter turret set to 5600K+ND? • Is the iris closed? • Is the shutter speed too fast? • Is the viewfinder cable correctly connected?
Noise appears when playing back a tape recorded on another unit. The transient section between scenes recorded on other units and those recorded on this unit may appear disturbed.	• When a tape recorded on another unit is played back or used for recording, this phenomenon may occur due to tracking errors.
The front section's recording level control doesn't work.	• Is the VCR Setup Menu item No. 246 CH1 FRONT VR ENABLE set to "DISABLE". If so, set to "ENABLE".
The front section's recording level control doesn't change the recording level of the sound input to CH2.	• The front section's recording level control cannot be used to change the recording level of the sound input to CH2. Use the side section's CH2 recording level control for this purpose.
Recording operation stopped.	• Is the SERVO indicator or "SYNC INH" displayed on the counter display? If so, check the input sync signal.

For servicing
See the service manual page 1-25, "1.14.4 HOUR METER".

14-2 Hour Meter Display

The unit can display the accumulated running time of the head drum as hour meter data on the counter display. The hour meter can be displayed by selecting HM (HOUR METER) on the VCR Setup Menu. Use this as a guide for periodical maintenance.
☞ See page 8.

Note:
The hour meter is not shown correctly when no videocassette is inserted.

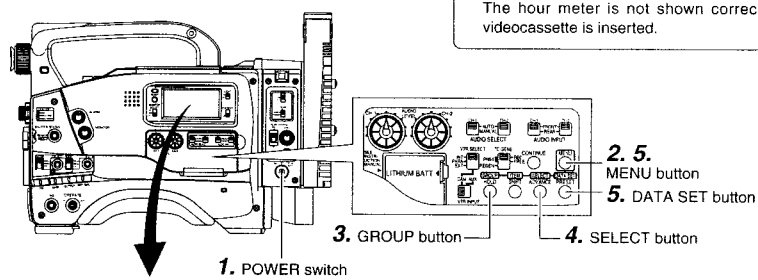

Counter display

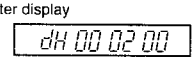

Accumulated drum running time: 200 hrs.

Viewfinder

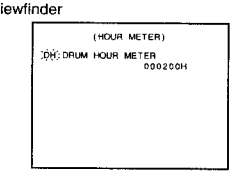

1. Set the POWER switch to ON.

2. Press the MENU button to display the VCR Setup Menu. "MENU" lights in the display, and the VCR Setup Menu's group menu appears in the viewfinder and on the counter display.

3. Press the GROUP button and choose "HM: HOUR METER".
- "HM HOUR METER" is shown blinking in the viewfinder. The counter display shows "Hour".

4. Press the SELECT button.
The accumulated running time of the head drum is indicated in the viewfinder and on the counter display.

5. To return to the normal mode, press the DATA SET button.
- Pressing the MENU button returns you to the group menu.

14-3 Specifications

■ CAMERA SECTION

Image pickup devices: 1/2-inch interline CCD x 3
Color separation optical system: F1.4 3-color separation prism
Number of effective pixels: Approx. 380,000 pixels ((H) 768 x (V) 494)
Color system : NTSC (R-Y, B-Y encoder)
Color bars : SMPTE color bar
Sync system : Internal sync (built-in SSG)
External sync (VBS or BB)
Lens mount : Bayonet system
(compatible with 1/2-inch lenses)
Optical filter : 3200 K, 5600K + 1/8ND, 5600 K + 1/64ND
Sensitivity : F11, 2000 lx
Minimum illumination: 0.75 lx (F1.4, LOLUX mode)
Calculated value
S/N (VIDEO OUT output) : 62 dB (Typical)
Horizontal resolution : 750 lines (Center)
Gain : -3, 0, 3, 6, 9, 12, 18 dB, ALC, LOLUX,
Shutter speed : 1/100, 1/250, 1/500, 1/1000, 1/2000
V.SCAN speed : 60.1 Hz to 2084.6 Hz
Registration : 0.05% or less (excluding lens distortion)
Contour correction : Horizontal: dual-edged. Vertical: 2 H

■ VCR SECTION

Format : Mini DV (SP mode only)
Tape speed : 18.812 mm/s
Record/Play time : 60 minutes
(With M-DV60ME cassette)
F.F/Rewind time : Approx. 3 minutes 30 seconds
(With M-DV60ME cassette)

[VIDEO]
Recording format : 8-bit, 13.5 MHz, 4:1:1 component recording

[AUDIO]
Recording format : 16-bit, 48 kHz, 2-channel PCM audio/12-bit, 32 kHz 4-channel PCM audio (2 channels only for recording)
Frequency response : 20 Hz to 20 kHz
Wow & flutter : Below measurable limit

[Time Code System]
Time code signal : Compliance with SMPTE standard
LTC input : 0 dBs ± 6 dBs, high impedance, unbalanced
LTC output : 0 dBs ± 6 dBs, low impedance, unbalanced

■ INPUT/OUTPUT SIGNALS

Video signal output : 1 V (p-p), 75 ohms (BNC) unbalanced composite output.
YC output : Y 1 V (p-p) 75 ohms unbalance
C 0.286 V (p-p) 75 ohms unbalance (4-pin)
PROMPTER output : Return/prompter video signal output
External video signal input : Composite video signals
1 V (p-p) ±0.3 V (p-p) 75 ohms unbalance (BNC)
Bandwidth 6.75 MHz
VTR/RM multi-pin connector : Camera composite video signal output
(Y/C/RGB/CPN can be selected in menu) (26-pin)
Lens : 12-pin connector
Audio input : Microphone -60dBs, 3 kohm balanced
Line +4dBs, 10 kohm balanced
Audio output : -6 dBs, low impedance, unbalanced
Earphone output : -60 dBs to -17 dBs, at 8-ohm load
Monaural audio (mini jack)
DC input : 12V DC (11V to 15 V DC) (XLR-4)
Auxiliary power output: 12 V DC, max. 0.1A (11V to 15 V DC)
DV connector : 4-pin
RS-232C : Mini DIN 6-pin

■ GENERAL

Power consumption : 34 W (when recording)
Mass : Approx. 4 kg
Operating temperatures: 0 °C to 40 °C
Operating humidity : 30 % to 80 % RH
Storage temperatures: -20 °C to 60 °C

■ ACCESSORIES

Microphone : x 1
Tripod base : x 1
Lithium battery : x 1 (CR2032)
Head cleaning tape : x 1
Instructions : x 1

Design and specifications are subject to change without notice.

14-3 Specifications

■ CAMERA SECTION

Image pickup devices: 1/2-inch interline CCD x 3
Colour separation optical system: F1.4 3-colour separation prism
Number of effective pixels: Approx. 440,000 pixels ((H) 752 x (V) 582)
Colour system : PAL (R-Y, B-Y encoder)
Colour bars : EBU colour bar
Sync system : Internal sync (built-in SSG)
External sync (VBS or BB)
Lens mount : Bayonet system
(compatible with 1/2-inch lenses)
Optical filter : 3200 K, 5600K + 1/8ND, 5600 K + 1/64ND
Sensitivity : F11, 2000 lx
Minimum illumination: 0.75 lx (F1.4, LOLUX mode)
Calculated value
S/N (VIDEO OUT output) : 60 dB (Typical)
Horizontal resolution : 750 lines (Center)
Gain : -3, 0, 3, 6, 9, 12, 18 dB, ALC, LOLUX,
Shutter speed : 1/120, 1/250, 1/500, 1/1000, 1/2000
V.SCAN speed : 50.1 Hz to 2067.8 Hz
Registration : 0.05% or less (excluding lens distortion)
Contour correction : Horizontal: dual-edged. Vertical: 2 H

■ VCR SECTION

Format : Mini DV (SP mode only)
Tape speed : 18.831 mm/s
Record/Play time : 60 minutes
(With M-DV60ME cassette)
F.F/Rewind time : Approx. 3 minutes 30 seconds
(With M-DV60ME cassette)

[VIDEO]
Recording format : 8-bit, 13.5 MHz, 4:2:0 component recording

[AUDIO]
Recording format : 16-bit, 48 kHz, 4-channel PCM audio/12-bit, 32 kHz 4-channel PCM audio (2 channels only for recording)
Frequency response : 20 Hz to 20 kHz
Wow & flutter : Below measurable limit

[Time Code System]
Time code signal : Compliance with EBU standard
LTC input : 0 dBs ± 6 dBs, high impedance, unbalanced
LTC output : 0 dBs ± 6 dBs, low impedance, unbalanced

■ INPUT/OUTPUT SIGNALS

Video signal output : 1 V (p-p), 75 ohms (BNC) unbalanced composite output.
YC output : Y 1 V (p-p) 75 ohms unbalance
C 0.3 V (p-p) 75 ohms unbalance (4-pin)
PROMPTER output : Return/prompter video signal output
External video signal input : Composite video signals
1 V (p-p) ±0.3 V (p-p) 75 ohms unbalance (BNC)
Bandwidth 6.75 MHz
VCR/RM multi-pin connector : Camera composite video signal output
(Y/C / RGB / CPN Can be selected in menu)
(26-pin)
Lens : 12-pin connector
Audio input : Microphone -60dBs, 3 kohm balanced
Line +4dBs, 10 kohm balanced
Audio output : -6 dBs, low impedance, unbalanced
Earphone output : -60 dBs to -17 dBs, at 8-ohm load
Monaural audio (mini jack)
DC input : 12V DC (11V to 15 V DC) (XLR-4)
Auxiliary power output: 12 V DC, max. 0.1A (11V to 15 V DC)
DV connector : 4-pin
RS-232C : Mini DIN 6-pin

■ GENERAL

Power consumption : 12V ⎓ 2.8A with VF-P400 (when recording)
Mass : Approx. 4 kg
Operating temperatures: 0 °C to 40 °C
Operating humidity : 30 % to 80 % RH
Storage temperatures: -20 °C to 60 °C

■ ACCESSORIES

Microphone : x 1
Tripod base : x 1
Lithium battery : x 1 (CR2032)
Head cleaning tape : x 1
Instructions : x 1

Design and specifications are subject to change without notice.

14-3 Specifications

OPTIONAL ACCESSORIES

Viewfinder	: VF-P115B, VF-P116
Power zoom lens	: S14 x 7.3B12, S16 x 6.7B12 S19 x 6.5B12 (FUJINON) YH14 x 7.3K12, YH18 x 6.7K12 (CANON)
AC power adapter	: AA-P250
Microphone	: MV-P615
Microphone holder	: KA-A50

EXTERNAL DIMENSIONS (unit: mm)

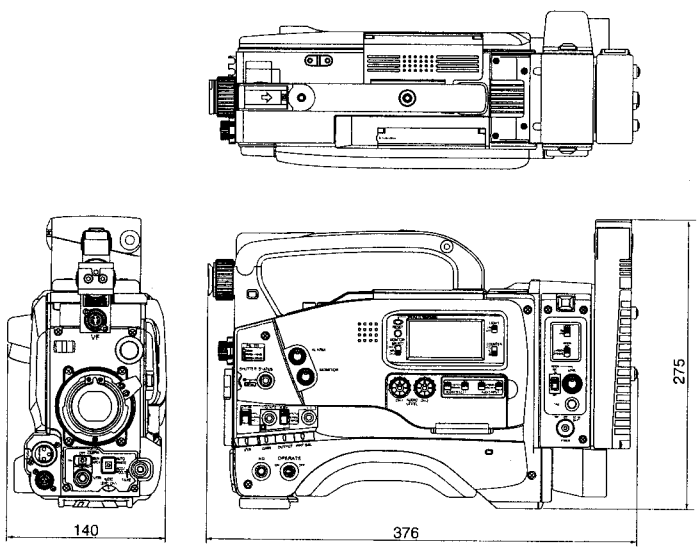

* Design and specifications are subject to change without notice.

JVC®
VICTOR COMPANY OF JAPAN, LIMITED

JVC® is a registered trademark owned by VICTOR COMPANY OF JAPAN, LTD.
JVC® is a registered trademark in Japan, the U.S.A., the U.K. and many other countries.
© 2000 VICTOR COMPANY OF JAPAN, LIMITED

Printed in Japan
SC96999 (U MODEL)
SC961000 (E MODEL)

SECTION 1
SERVICE CAUTIONS AND DISASSEMBLY

1.1 RESETTING THE POWER CIRCUIT PROTECTION BREAKER

This unit employs a power circuit protection breaker in place of a fuse to disconnect from the main power and to thus protect the internal circuitry from damage caused by any current overload. The power can be re-connected by resetting the breaker.

> To prevent any complications resulting from the failure, check the cause of the shutdown and repair it before resetting the circuit breaker.

(1) Switch OFF the POWER of this unit as well as that of any equipment supplying power to it.
(2) The circuit breaker Ⓐ is located below at the rear. Press the BREAKER button to re-connect the power line.

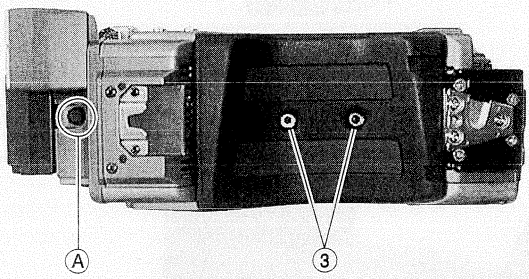

Fig. 1-1 Position of the Circuit Breaker

1.2 REMOVING THE EXTERIOR COVERS

1.2.1 Removing the Left Side Cover

(1) Open the cassette cover by pressing the EJECT switch.
(2) Loosen the 4 screws ① and remove the left side cover.

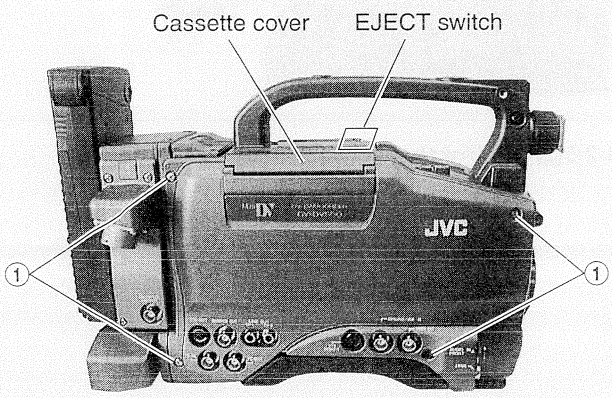

Fig. 1-2-1 Removing the Left Side Cover

1.2.2 Opening the Right Side Cover

(1) Loosen the 4 screws ②.

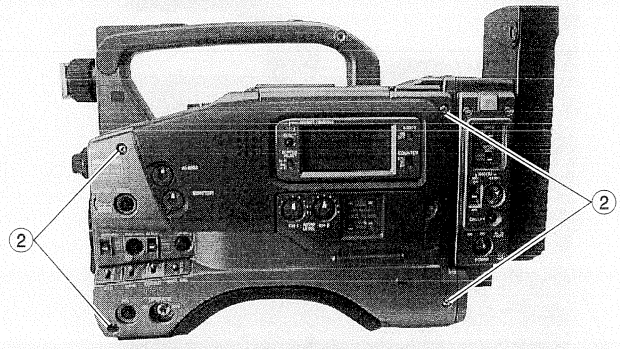

Fig. 1-2-2(1) Opening the Right Side Cover

(2) Flip open the right side cover toward the front.

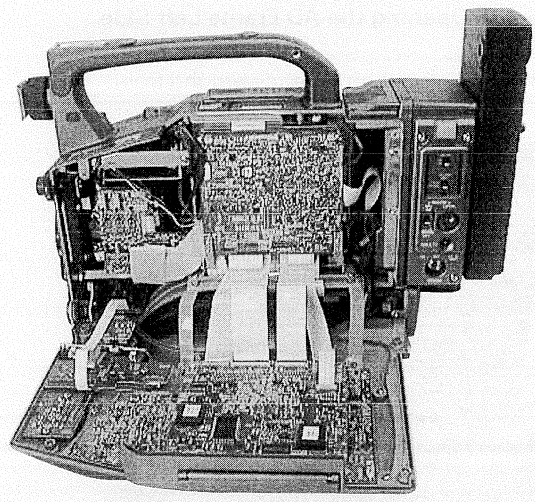

Fig. 1-2-2(2) View of the Opened Right Side Cover

1.2.3 Removing the Bottom Cover

(1) Remove the left side cover (see section 1.2.1).
(2) Remove the 2 screws ③ and remove the shoulder pads (see Fig. 1-1).
(3) Remove the 4 screws ④ and remove the bottom cover.

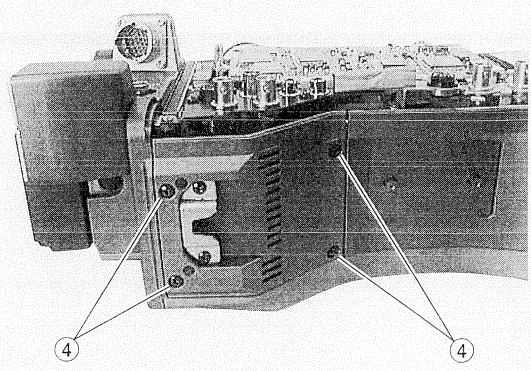

Fig. 1-2-3 Removing the Bottom Cover

1.2.4 Opening the AD Frame Left Side

(1) Remove the 3 screws ⑤.

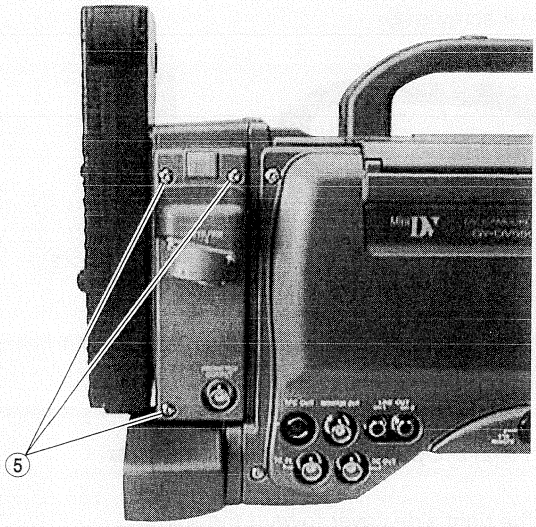

Fig. 1-2-4(1) Opening the AD Frame Left Side

(2) Flip open the AD Frame Left Side toward the front.

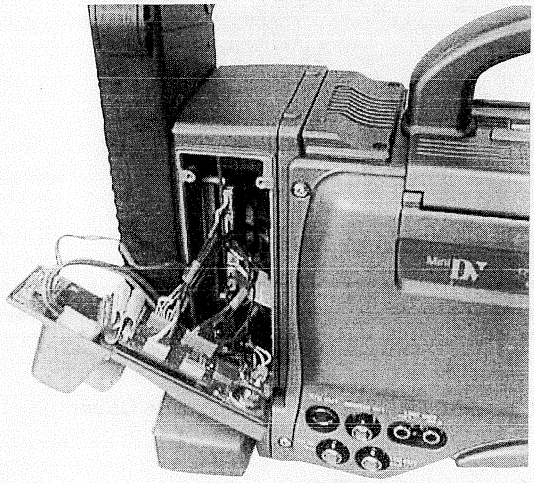

Fig. 1-2-4(2) View of the Opened AD Frame Left Side

1.2.5 Opening the AD Frame Right Side

(1) Remove the 3 screws ⑥.

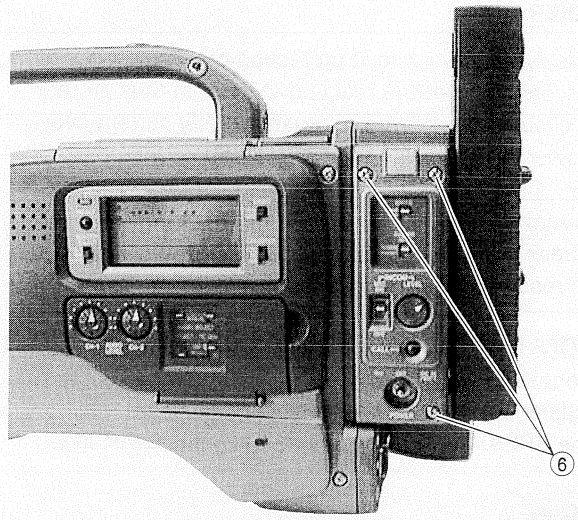

Fig. 1-2-5(1) Opening the AD Frame Right Side

(2) Flip open the AD Frame Right Side toward the front.

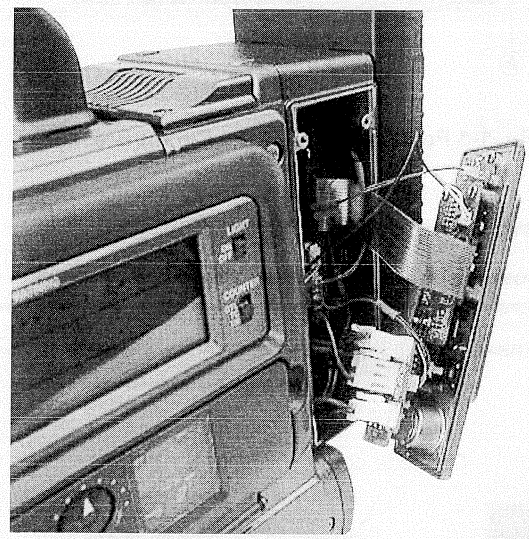

Fig. 1-2-5(2) View of the Opened AD Frame Right Side

1.3 LAYOUTS OF THE MAJOR BOARDS

On the side of the left-hand side cover

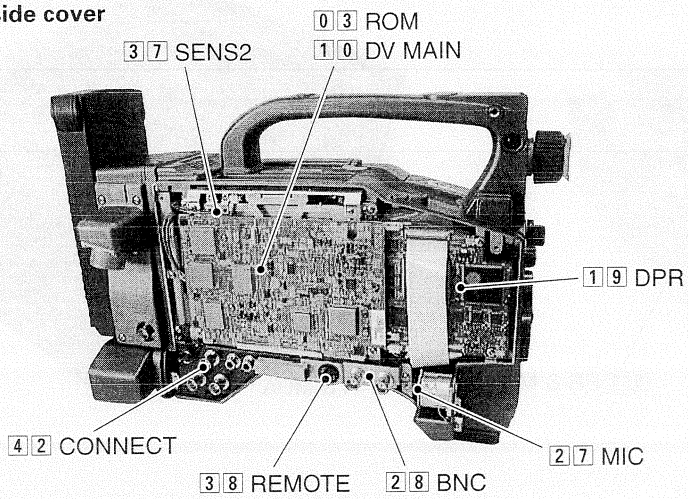

On the side of the right-hand side cover

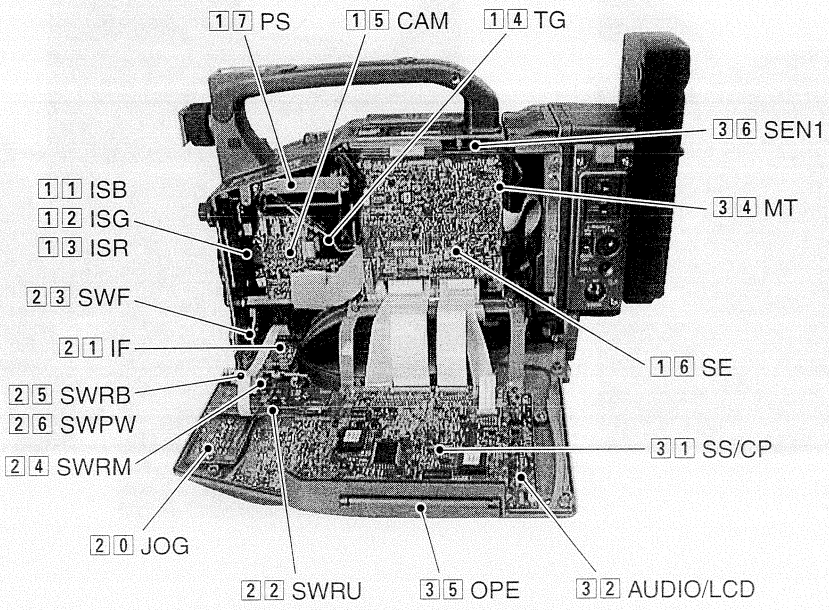

On the side of the bottom cover

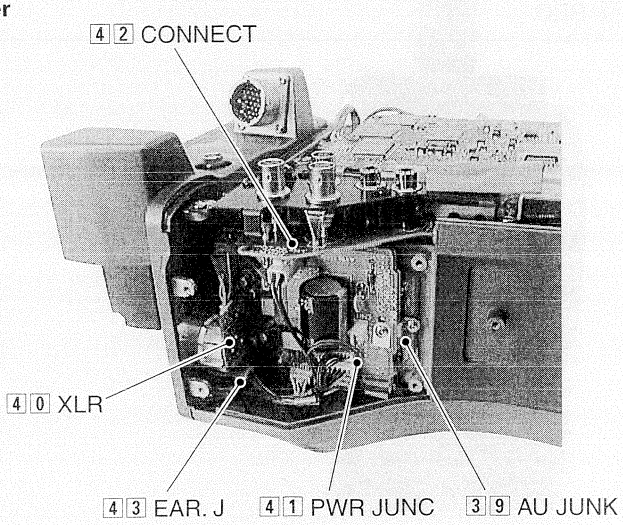

DVC unit

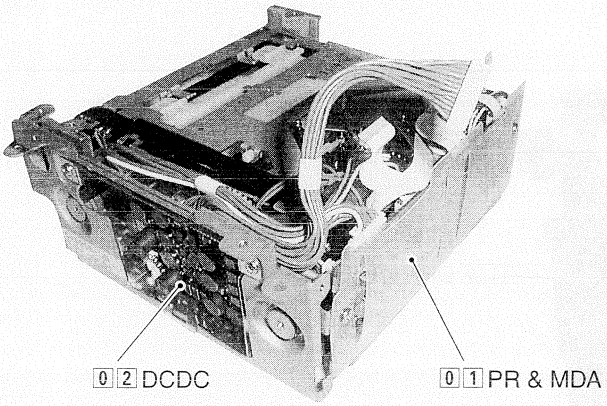

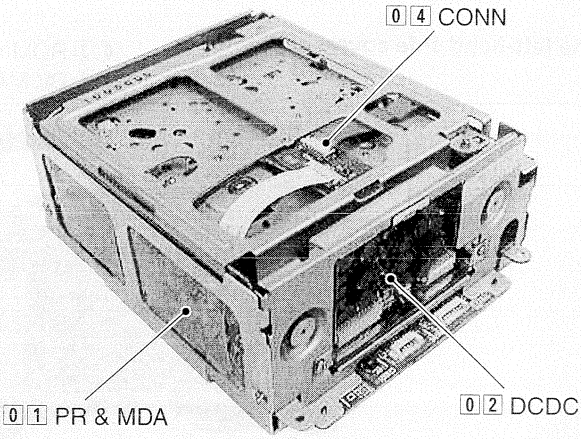

On the Side of the AD frame left-hand Side

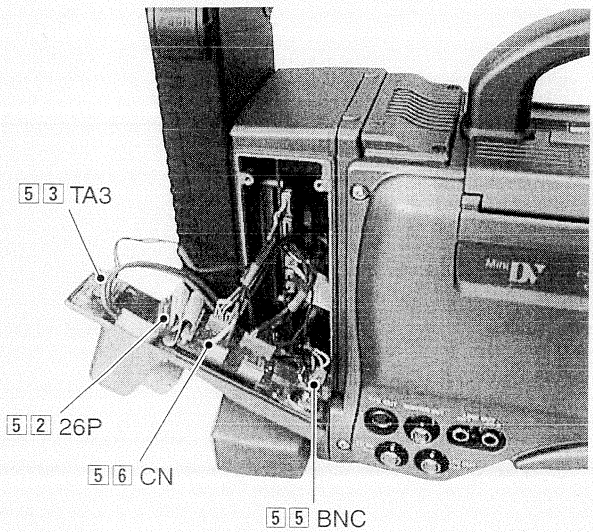

On the Side of the AD from right-hand Side

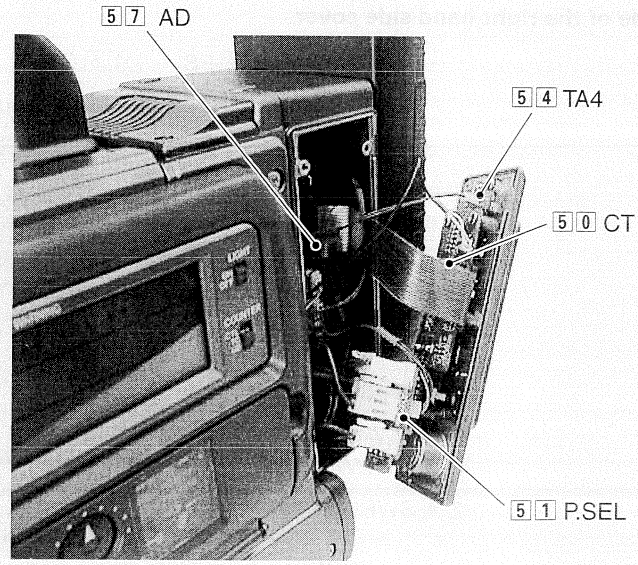

On the side of the rear

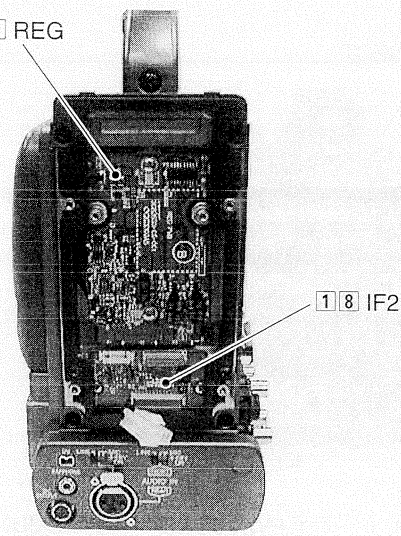

1.4 REMOVING THE OPTICAL BLOCK ASSEMBLY AND THE OPTICAL FILTER ASSEMBLY

(1) Open the right side cover (see section 1.2.2).
(2) Remove the 4 screws ①.

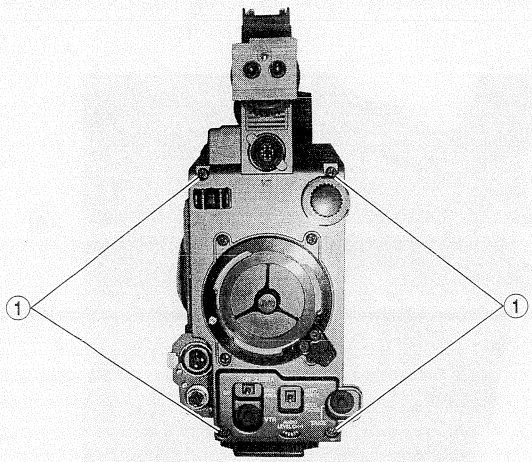

Fig. 1-4(1)

(3) Pull out the optical block assembly and the front panel together toward the front.

CAUTION

Be careful not to damage the boards or the FFC cables.

(4) Remove the 2 screws ② and remove the CAM board.
(5) Loosen the 2 screws ③ and remove the connector Ⓐ.
(6) Remove the optical filter assembly in the direction of the arrow.

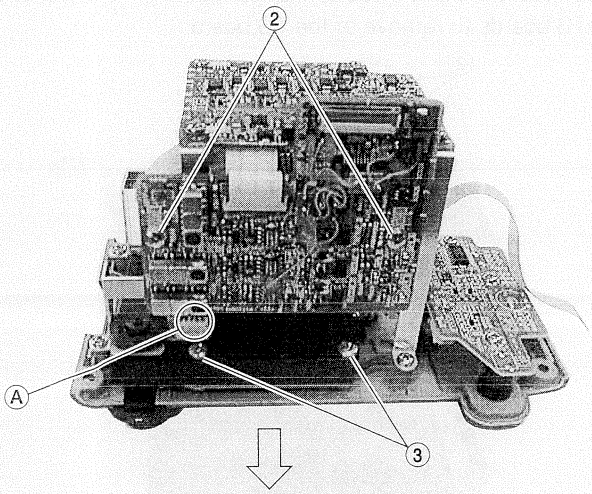

Fig. 1-4(2)

(7) Remove the 4 screws ④ and remove the TG board mounting brackets.

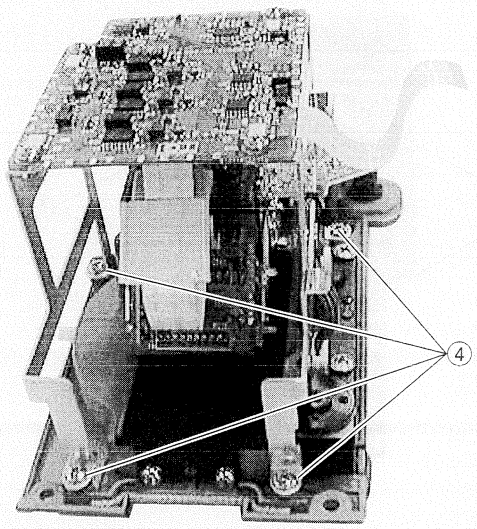

Fig. 1-4(3)

(8) Flip open CN11, CN12 and CN13 and unplug the flexible cables.

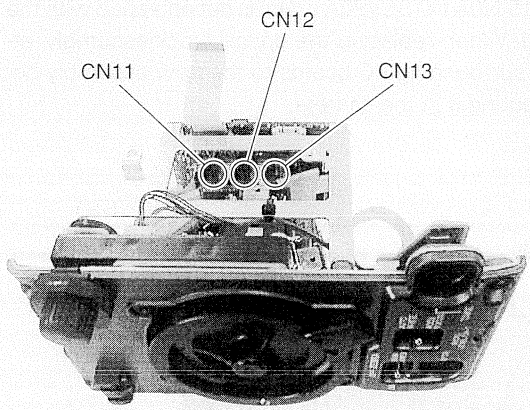

Fig. 1-4(4)

(9) Remove the 4 screws ⑤and separate the optical block assembly from the front panel.

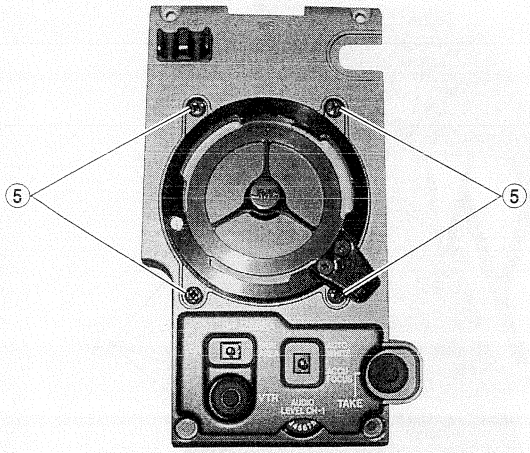

Fig. 1-4(5)

NOTES

- The CCDs are bonded precisely to the prism. In case of trouble with a CCD, it is not possible to replace an individual CCD, but the entire optical block assembly should be replaced.
- The optical block assembly supplied as a service part (SCM1115-N0A (NTSC)/P0A (PAL)) is not equipped with the TG board. When replacing the optical block assembly, attach the surrounding PC boards to the new assembly before mounting it in the camera.

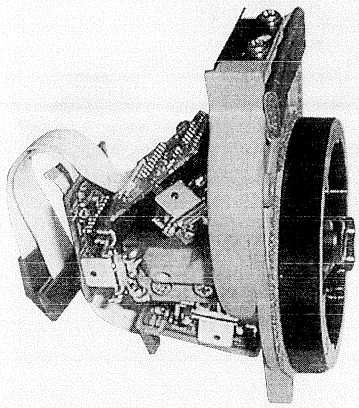

Fig. 1-4(6) Optical Block Assembly for Servicing

CAUTION

When mounting the optical block assembly in the camera, take care of the positioning of the wire assembly. A malfunction may occur if a wire is somehow caught up.

1.5 REMOVING MAJOR BOARDS FROM THE CAMERA

1.5.1 Removing the CAM board.

(1) Open the right side cover (see section 1.2.2).
(2) Remove the CN14 Ⓐ and CN21 Ⓑ of the CAM board.
(3) Remove the 2 screws ①. Now the CAM board can be removed.

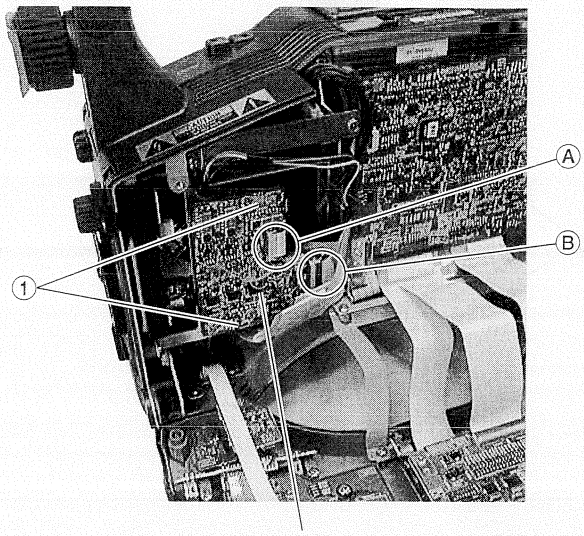

Fig. 1-5-1

1.5.2 Removing the TG board

(1) Open the right side cover (see section 1.2.2).
(2) Remove the 4 screws ① retaining the front panel (see Fig. 1-4(1)).
(3) Pull out the optical block assembly and the front panel together toward the front (see Fig. 1-4(1)).
(4) Remove the 4 screws ②. Now the TG board is disengaged from the stay.
(5) Disconnect the flexible cables that connecting the IS, CAM and TG boards to remove of the TG board.

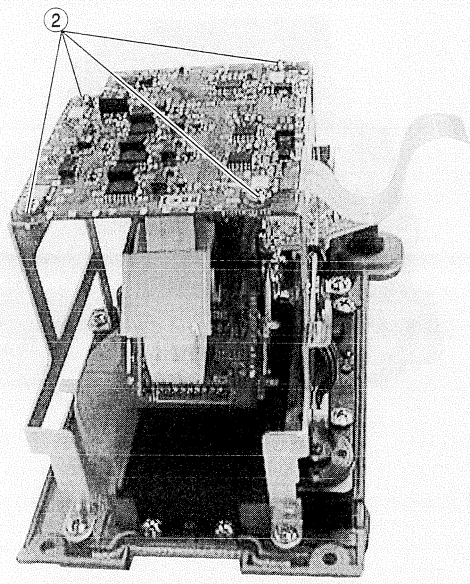

Fig. 1-5-2

1.5.3 Removing the DPR board

(1) Remove the left side cover (section 1.2.1).
(2) Remove the 6 screws ③.
(3) The DV MAIN board on the VCR side and the DPR board are connected by a board-to-board connector. Open the two boards together in the direction of the arrow.

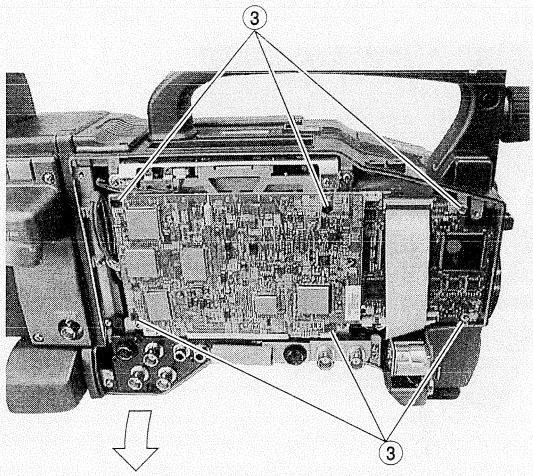

Fig. 1-5-3(1)

(4) The opened boards can be secured by fitting them into the notches on the VCR side frame as shown in the figure.

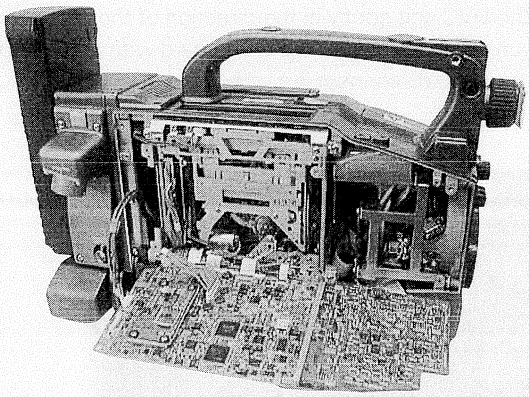

Fig. 1-5-3(2)

The operation of the VCR can be confirmed when the circuit boards are tilted.
When the circuit boards are tilted, take care that the electrical circuitry on each board is not short-circuited by the BNC connector located below the board.

1.5.4 Removing the SW boards

(1) Open the right side cover (see section 1.2.2).
(2) The JOG, SWRU, SWRM, SWPW and SWRB boards are attached on the right side cover. Remove them as required.

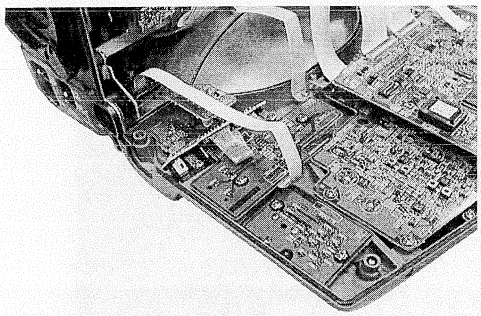

Fig. 1-5-4

1.5.5 Removing the PS board.

(1) Open the right side cover (see section 1.2.2).
(2) Remove the 2 screws ④.
(3) Pull out the PS board, along the guide rail in the direction of the arrow.

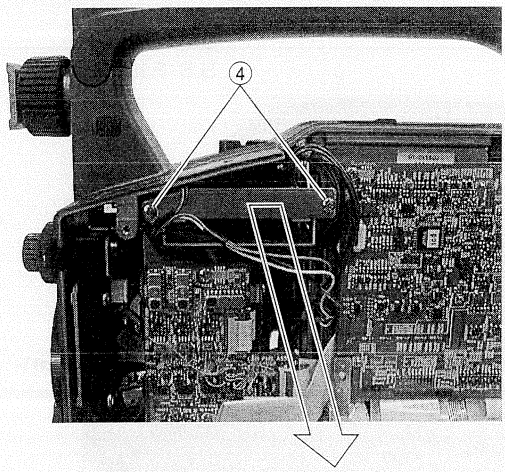

Fig. 1-5-5

1.5.6 Removing the SS/CP board

(1) Open the right side cover (see section 1.2.2).
The SS/CP board is clamped to the right side cover.
(2) Remove the 2 screws ⑤. Now the SS/CP board can be removed.

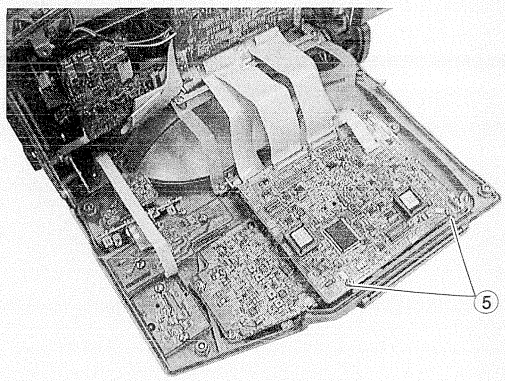

Fig. 1-5-6

1.5.7 Removing the SE and MT boards

(1) Open the right side cover (see section 1.2.2).
(2) Remove the 2 screws ⑥. Now the SE board can be removed.

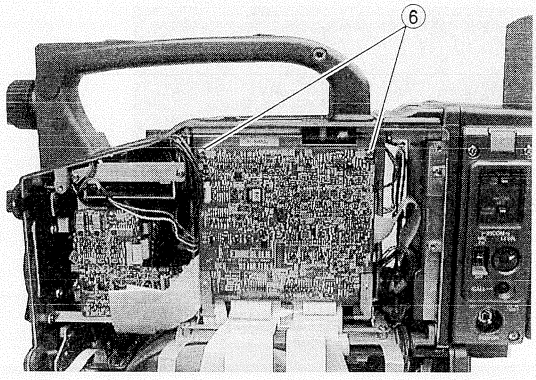

Fig. 1-5-7(1)

(3) Remove the SE board, then remove the 2 screws ⑦ and 2 stud screws ⑧. Now the MT board can be removed.

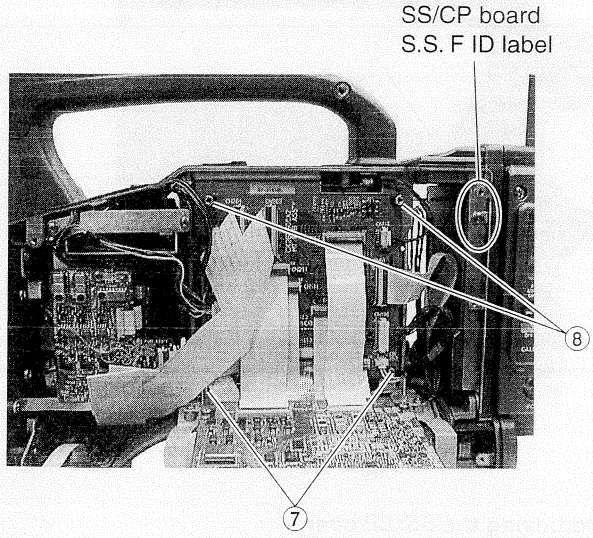

Fig. 1-5-7(2)

1.6 REMOVING THE MAJOR BOARDS FROM THE VCR

1.6.1 Removing the Audio/LCD board

(1) Open the right side cover (see section 1.2.2).
(2) Remove the SS/CP board (see section 1.5.6).
(3) Remove the 6 screws ① and 2 stud screws ②. Now the AUDIO/LCD board can be removed.

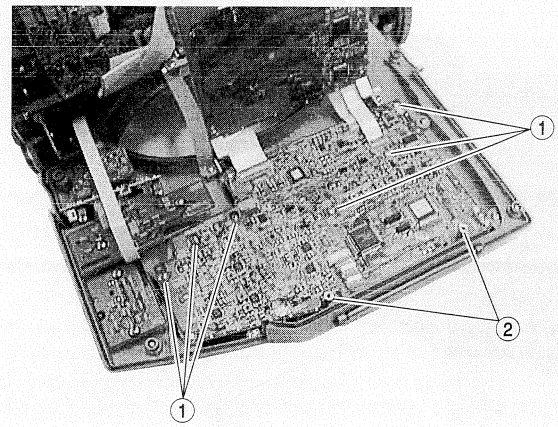

Fig. 1-6-1

1.6.2 Removing the DVC Unit

(1) Remove the left side cover (see section 1.2.1).
(2) Remove the 4 screws ③.
(3) Pull out the DVC unit gently in the direction of the arrow. As the DVC unit is connected to the DPR board with a board-to-board connector, disconnect it gently.

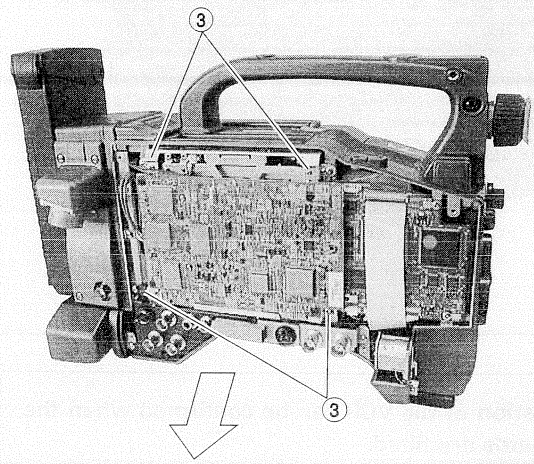

Fig. 1-6-2(1)

4) Remove the EJECT switch wire Ⓐ and DV terminal wire Ⓑ. Now the DVC unit can be removed.

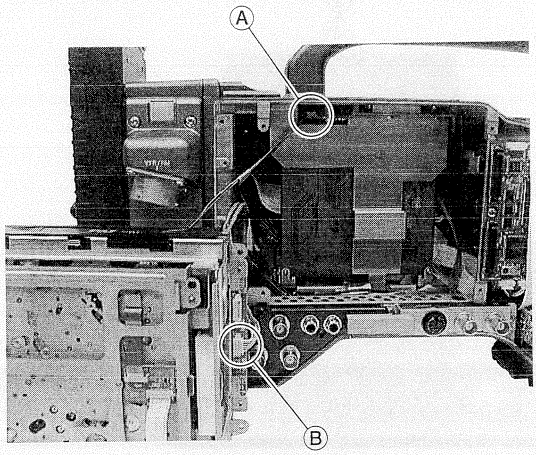

Fig. 1-6-2(2)

1.6.3 Removing the DV MAIN board

(1) Remove the DVC unit (see section 1.6.2).
(2) Remove the 4 screws ④. Now the DV MAIN board can be removed.

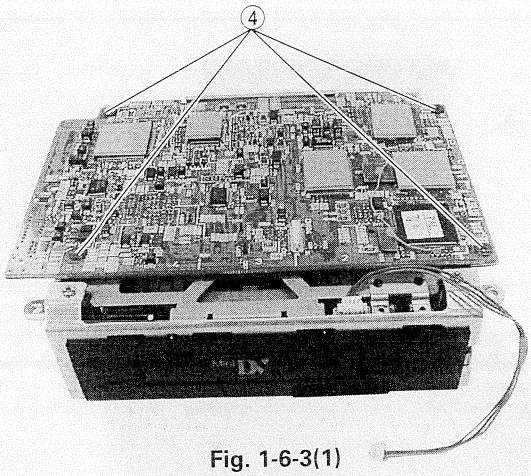

Fig. 1-6-3(1)

(3) After removing the DV MAIN board, leave it standing up by fitting it into the notches on the unit frame, as shown in the figure.

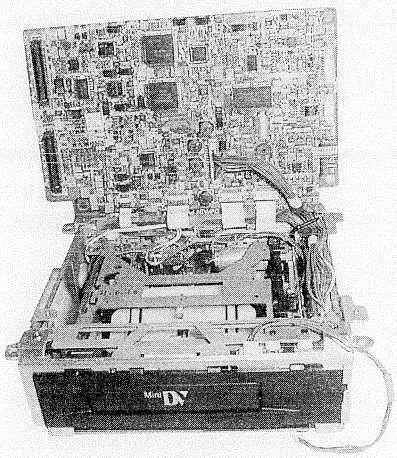

Fig. 1-6-3(2)

1.6.4 Removing the Battery Case

(1) Remove the 2 screws ⑤ and remove the rear cover of the battery case.
(2) Remove the 4 screws ⑥ and remove the battery case from the main unit.

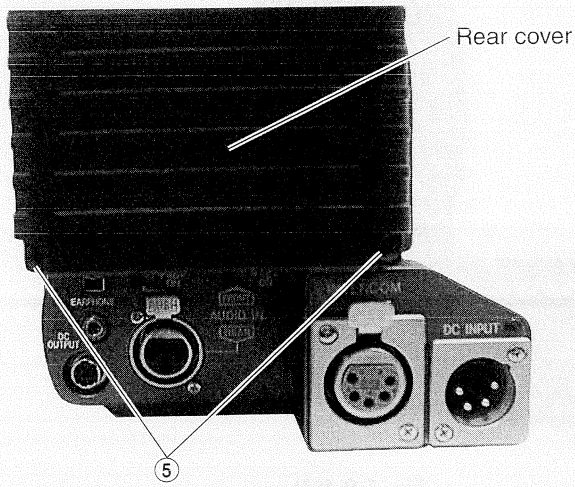

Fig. 1-6-4(1)

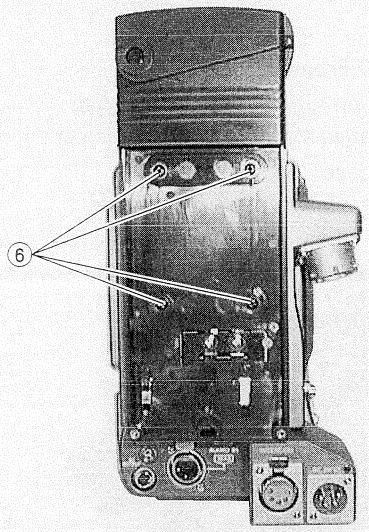

Fig. 1-6-4(2)

(3) Unplug the power cable that supplies power from the battery case to the main unit, from the connector Ⓒ.
Now the battery case can be removed.

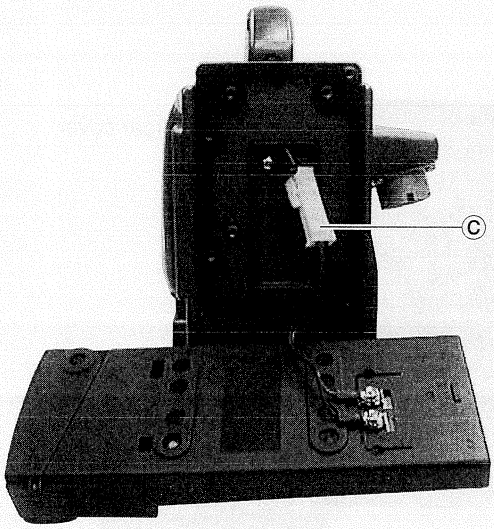

Fig. 1-6-4(3)

1.7 REMOVING THE MAJOR BOARDS FROM THE AD FRAME

1.7.1 Removing the AD Frame

(1) Open the AD Frame Left Side. (see section 1.2.4)
(2) Open the AD Frame Right Side. (see section 1.2.5)
(3) Remove the Battery Case. (see section 1.6.4)
(4) Remove the 2 screws ① and remove the panel.

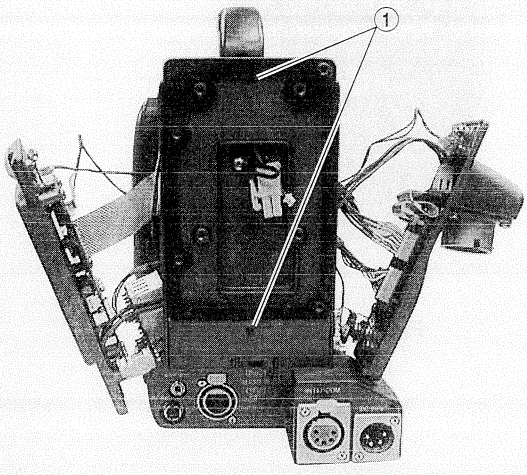

Fig. 1-7-1(1)

(5) To remove the 4 screws ② insert a screwdriver via the hole.

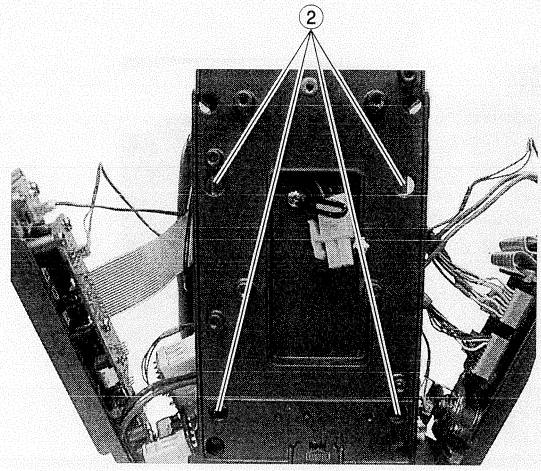

Fig. 1-7-1(2)

(6) Disconnect the power cable connectors Ⓒ, CN71 Ⓐ and CN72 Ⓑ of the IF2 board to remove of the AD Frame section.

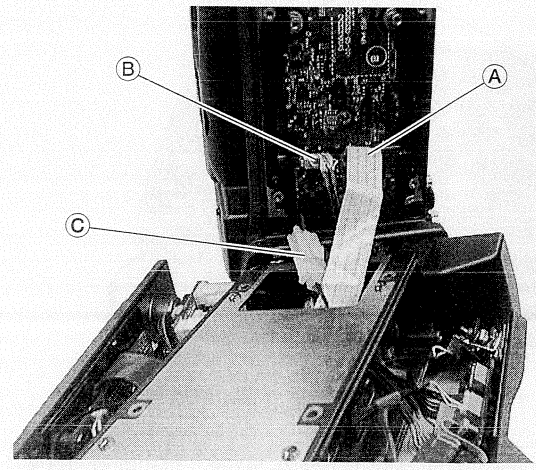

Fig. 1-7-1(3)

1.7.2 Removing the AD board

(1) Remove the AD Frame. (see section 1.7.1)
(2) Remove the 4 screws ③ and remove the panel.

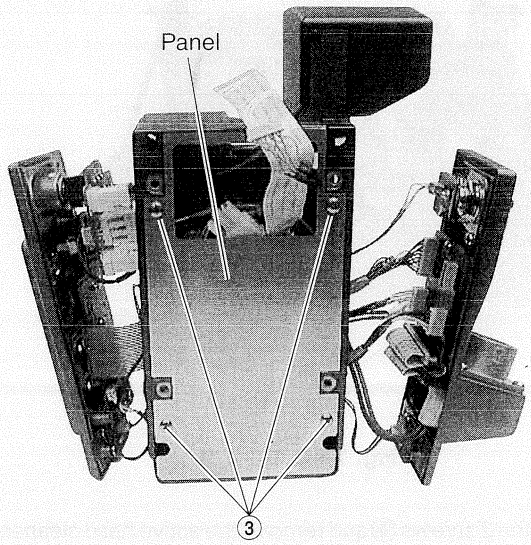

Fig. 1-7-2(1)

(3) Remove the 4 screws ④. Now the AD board can be removed.

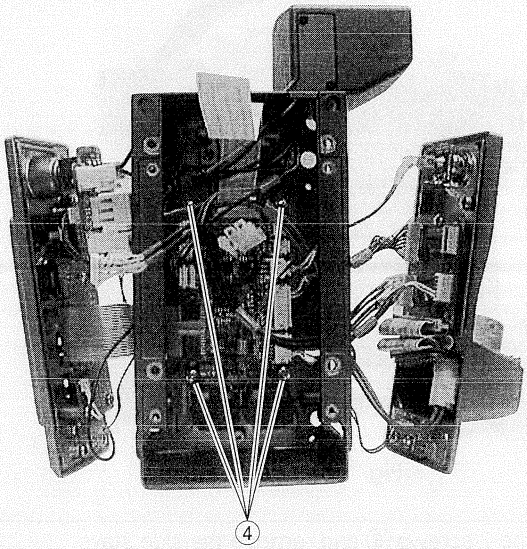

Fig. 1-7-2(2)

1.7.3 Removing the 26P board

(1) Open the AD Frame Left side. (see section 1.2.4)
(2) Unplug the flexible cable and connector connecting to the 26P board.
(3) Remove the 4 screws ⑤.
(4) Pull out the 26P board gently in the direction of the arrow.

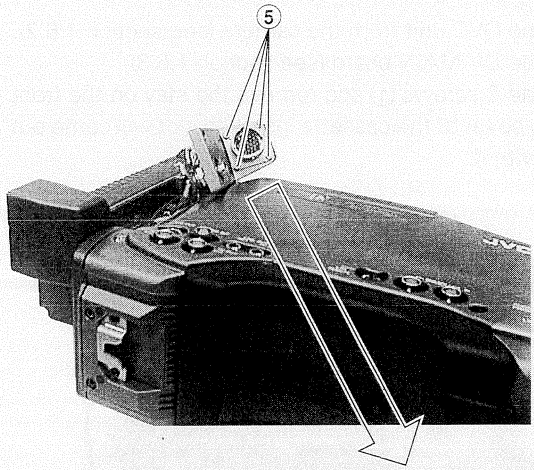

Fig. 1-7-3

CAUTION

Be careful not to damage the boards or the FFC cables.

1.7.4 Removing the REG and IF2 boards

(1) Remove the AD Frame (see section 1.7.1).
(2) The IF2 and REG boards can be detached by removing the two screws ⑥ that retain them.

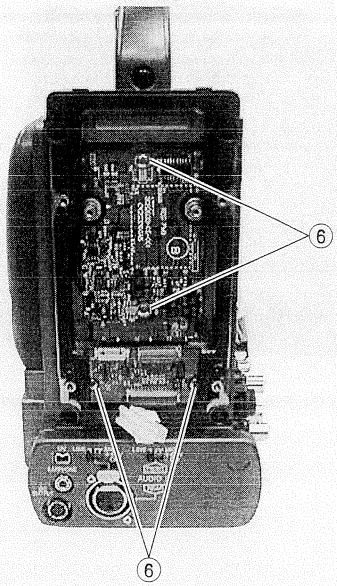

Fig. 1-7-4

1.8 DISASSEMBLY OF THE DVC UNIT

The DVC unit incorporated in the unit can be disassembled as described below. Note that the following description deals only with the method of removing the mechanism unit from the DVC unit.

1.8.1 Disassembling the Front Part of the Unit

(1) Remove the DVC unit from the camera (see section 1.6.2).
(2) Remove the DV MAIN board (see section 1.6.3).
(3) Remove the 2 screws ① and remove the stay on the front cover. The cover of the cassette insertion slot will come out together with it.

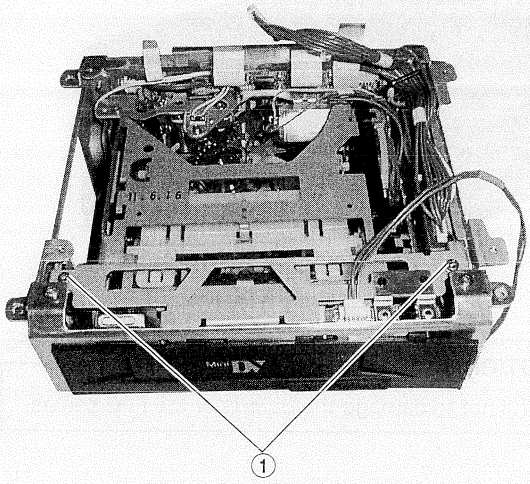

Fig. 1-8-1(1)

(4) Remove the 2 screws ② and remove the front stay.

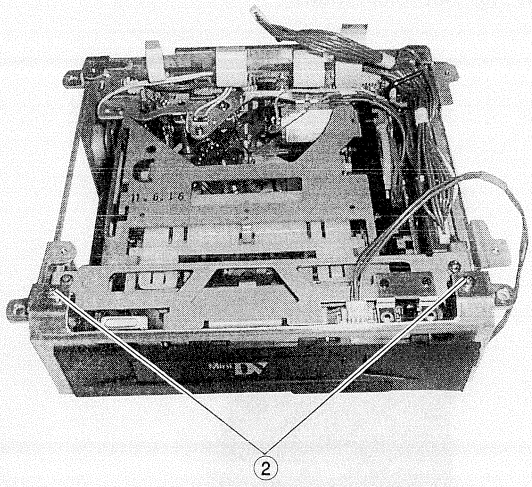

Fig. 1-8-1(2)

1.8.2 Disassembling the Rear Part of the Unit

(1) Remove the 2 screws ③ and remove the rear side stay.

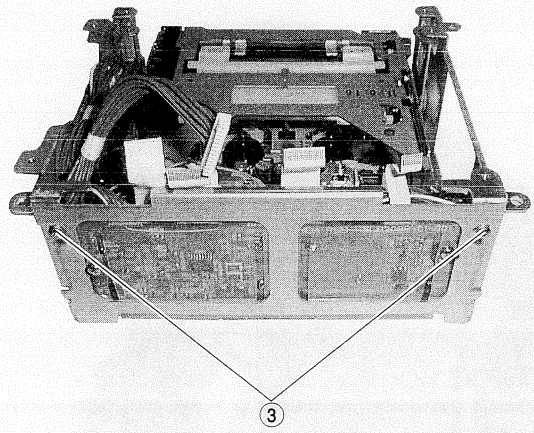

Fig. 1-8-2(1)

(2) Remove the 2 screws ④ and remove the active head cleaner. During this operation, be careful not to apply excessive force to the wire that is connected between the active head cleaner assembly and CN609 on the PR & MDA boards.

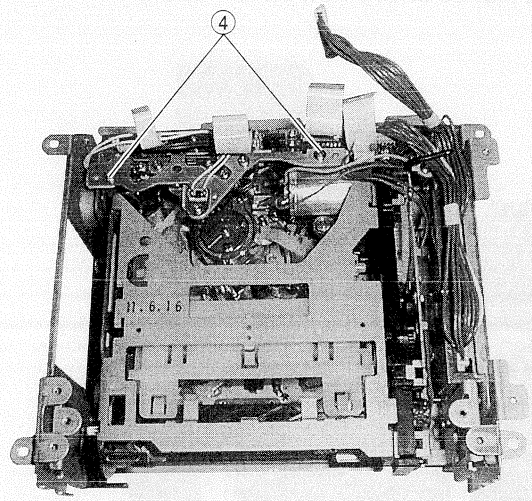

Fig. 1-8-2(2)

(3) Remove the 2 screws ⑤ and remove the side stays.

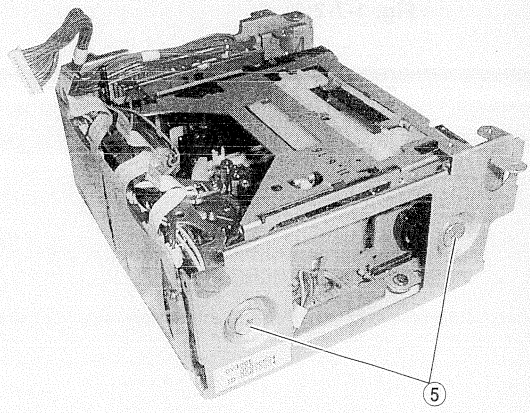

Fig. 1-8-2(3)

) Insulators (blue) are attached to the retaining screws. Be sure to attach the insulators when re-assembling the side stays.

) The side stays to both sides are attached in the same way. Remove the 2 screws ⑥ and remove the side stays.

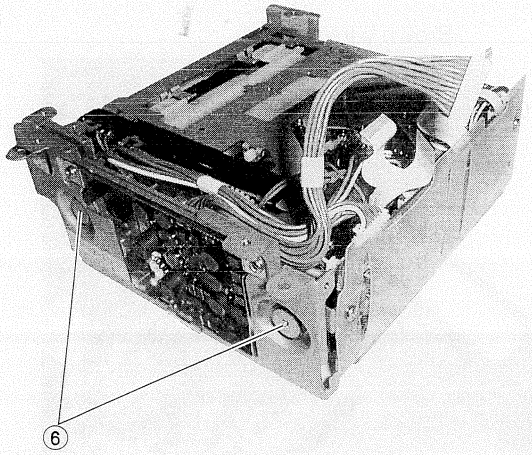

Fig. 1-8-2(4)

6) After removing the rear stays and side stays (left and right), remove the 2 screws ⑦ then remove the PR & MDA board. When removing the PR & MDA boards, be careful not to damage the wires and FFCs connecting them to the deck assembly housing motor and power supply board.

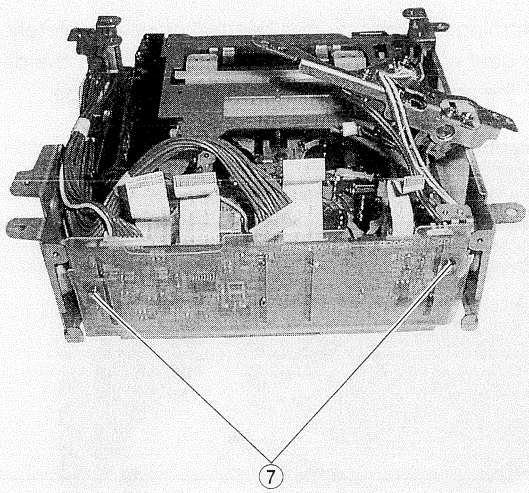

Fig. 1-8-2(5)

1.8.3 Removing the Cassette Housing Assembly

(1) Remove the 2 screws ⑧ and remove the cassette housing assembly.

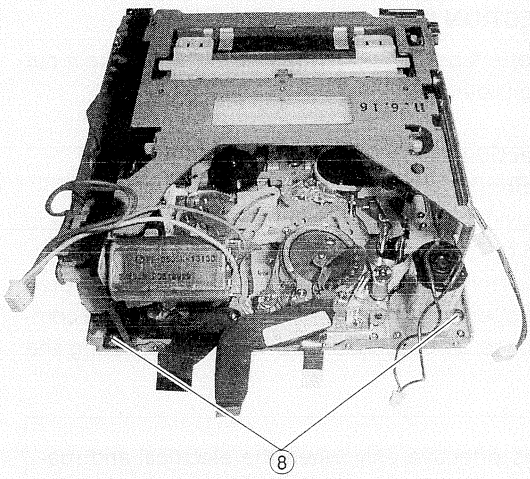

Fig. 1-8-3

1.8.4 Removing the Mechanism Unit

(1) Remove the 3 screws ⑨. This allows the mechanism unit to be removed from the stays When it is required to disassemble the mechanism unit itself, see section 2 of the service manual for GY-DV500 No. 60125.

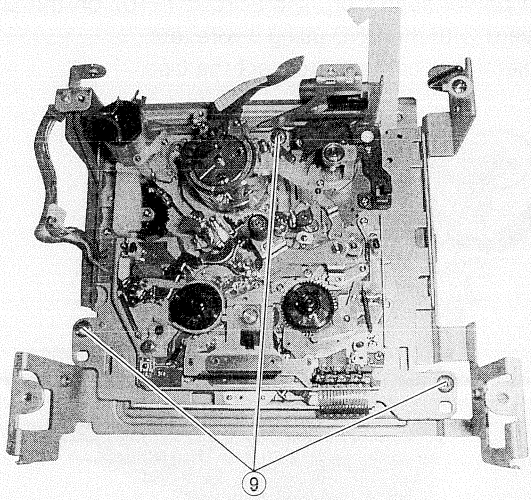

Fig. 1-8-4(1)

(2) When the remove the mechanism unit completely, also remove the connector Ⓐ from the rear.

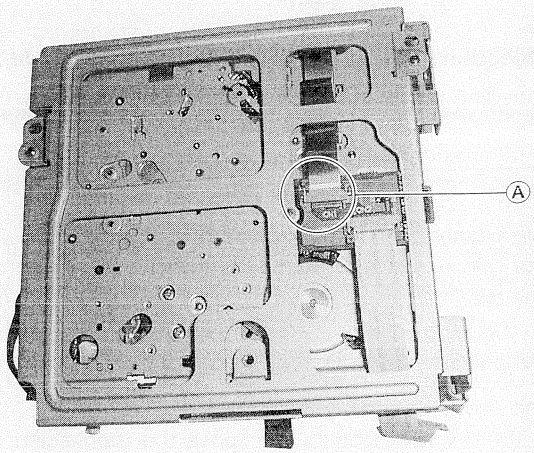

Fig. 1-8-4(2)

1.9 TAPE EJECTION IN CASE OF EMERGENCY

When the cassette tape cannot be ejected normally, take it out by the following methods.

1.9.1 Tape Ejection Using Forced Eject Mode (Short-circuiting of Internal TP)

GY-DV550 is provided with a compulsory eject mode for use in case the button operations are not accepted due to a malfunction of the mechanism control circuitry. When an attempted operation of the operation buttons is not accepted, set the compulsory eject mode as described below before removing the tape.

CAUTION

- This mode is effective only when the electrical and mechanical systems of the mechanism unit are normal and a tape ejection operation is not accepted due to a problem of the electrical system.
- If there is a problem in the mechanical system of the unit, this mode may be ineffective. If compulsory ejection is performed in such a case, the tape could be damaged or cut.

(1) Remove the left side cover (see section 1.2.1).
(2) With the power supply on, short-circuit TP107 on the DV MAIN board with the GND using a wire, etc.
(3) Forced ejection is activated to eject the tape.

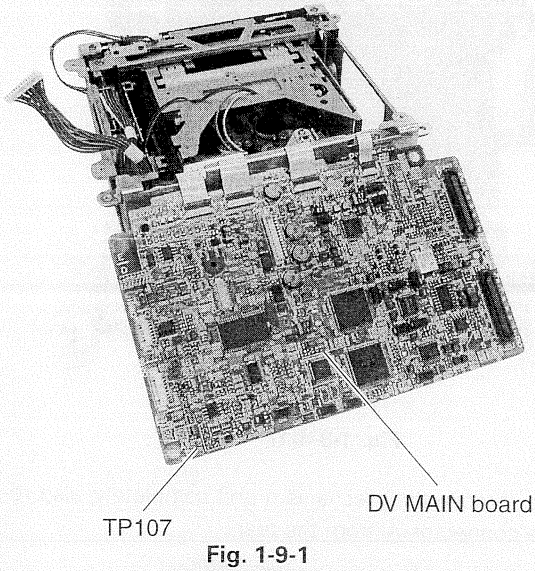

Fig. 1-9-1

1.9.2 Tape Ejection without Using the Forced Eject Mode

Activate the loading motor by applying DC voltage to its two terminals.

NOTE

When a forced ejection is not accepted because the loaded cassette tape cannot be ejected due to a fault in the electrical system or because of some problem in the mechanism unit, eject the tape by using the following procedure.
However, as this mode drives the loading motor, it assumes that the mechanical system is operating normally.

(1) Turn off the power supply to the unit.
(2) Flip open the DV MAIN board to expose the mechanism (see section 1.6.3).
(3) Apply 3 V DC to the electrodes at the top of the loading motor (orange wire to + pole, brown wire to - pole) to unload the tape. Unload it little by little because it could be damaged or contaminated by grease if the pole base assemblies are returned completely beyond the position of the tape.

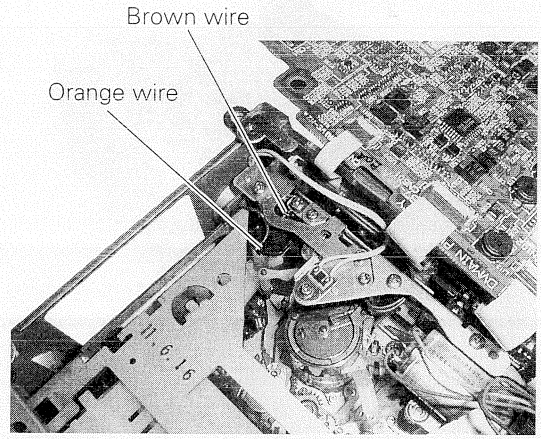

Fig. 1-9-2(1)

(4) If the tape slackens, take it up by rotating the shaft at the top of the capstan motor in the direction of the arrow using a sharp-tipped object (chip IC replacement tool, etc.).
(5) Repeat steps (3) and (4) above until the tape is taken up completely.
(6) After confirming that the tape has been taken up completely, rotate the gear of the cassette housing assembly in the direction of the arrow in order to eject the cassette tape.

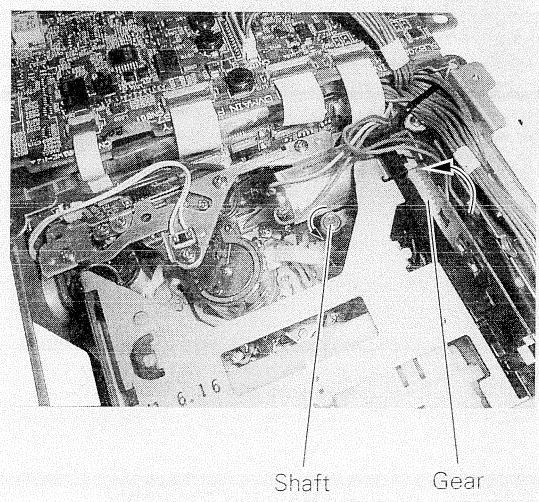

Fig. 1-9-2(2)

1.9.3 Manual Tape Ejection

If the loading motor cannot be run by the procedure outlined in section 1.9.2, the mechanism may be defective. When the loading motor is defective, remove the tape as described below.

(1) Remove the DVC unit from the main unit. See section 1.6.2 for the removal method.
(2) After removing the DVC unit, remove the DV MAIN board (see section 1.6.3).
(3) Remove the 2 screws and remove the active head cleaner assembly (see section 1.8.2).
(4) Remove the side cover to easy operation (see section 1.8.2).
(5) Remove the 2 screws and remove the rear panel from the side of the PR & MDA board.
Carefully unplug the wires so as not to damage them, then remove the PR & MDA board (see section 1.8.2).

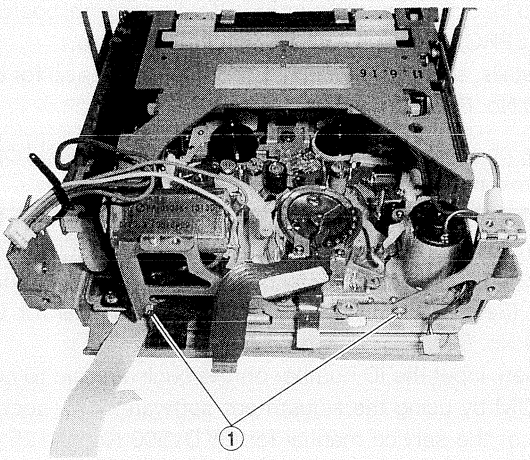

Fig. 1-9-3(1)

(6) Remove the 2 screws ① and remove the active head cleaner stay.

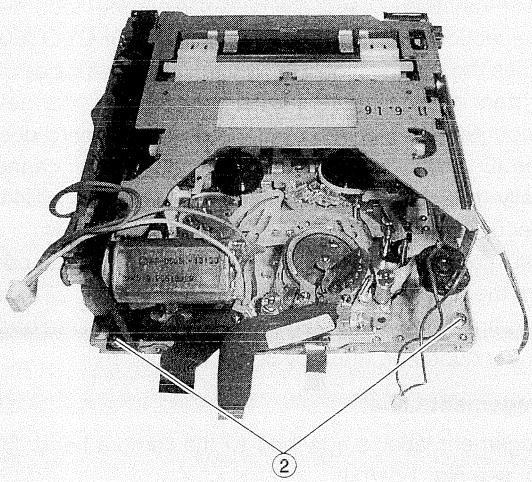

Fig. 1-9-3(2)

(7) Loosen the 2 screws ② so that the cassette housing is separated freely.
(8) Remove the 4 screws ③ and remove the loading motor.

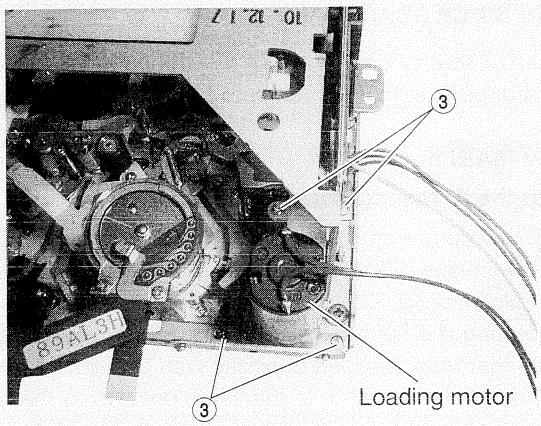

Fig. 1-9-3(3)

(9) Unload the pole base assemblies by rotating the gear shown in the figure in the direction of the arrow.

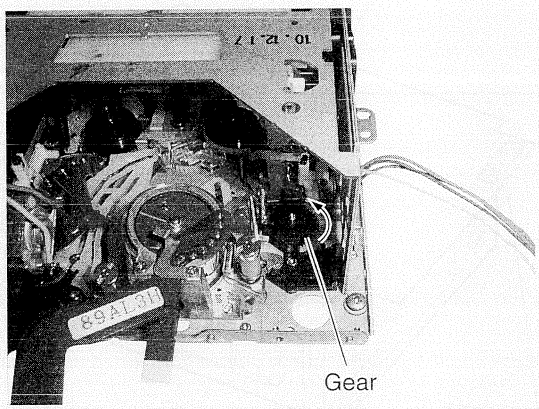

Fig. 1-9-3(4)

(10) The pole base assemblies should be unloaded little by little. If they are returned completely beyond the position of the tape, the tape may slacken and become damaged or stained by grease.
(11) If the tape slackens, take it up by rotating the shaft on the top of the capstan motor in the direction of the arrow using a sharp-tipped object (chip IC replacement tool, etc.) (see section 1.9.2-(4)).
(12) Repeat steps (9), (10) and (11) above until the tape is taken up completely.
(13) After confirming that the tape has been taken up completely, tighten the cassette housing retaining screws which were loosened in step (7).
(14) Attach and clamp the cassette housing again, then rotate the gear of the housing assembly in the direction of the arrow to eject the cassette tape in the same way as in section 1.9.2-(6).

1.10 CAUTION FOR REPLACING THE DV MAIN BOARD AND SS/CP BOARD

When the DV MAIN board or SS/CP board has been replaced for servicing, be sure to enforce the following items.

1.10.1 DV MAIN board

[A] About the ID Management Label

Each DVC unit carries an ID label in compliance with IEEE1394 showing the unique ID assigned on the production line.
(See the following figure for the label position.)
When replacing the DV MAIN board, remove the ID management label that was provided originally with the unit from the defective board and attach it in the same position to the new board.

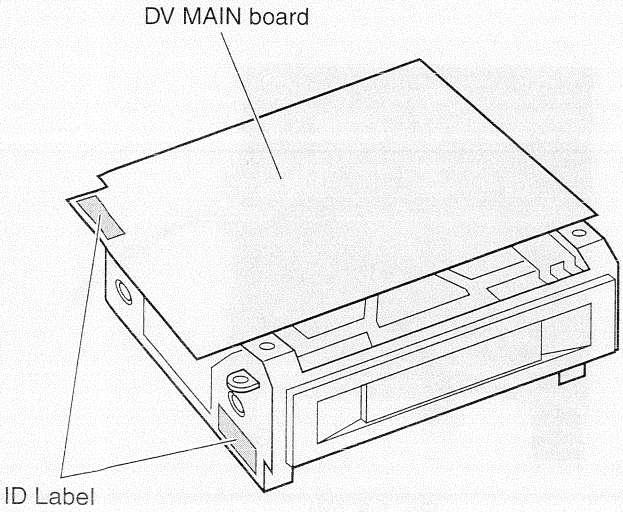

Fig. 1-10-1

[B] Load EEPROM Internal Data

The EEPROM provided with the new board for replacement contains no data, while the EEPROM originally provided with the DVC unit contains the IEEE1394 ID data as well as all adjustment data written in the assembly and adjustments written on the production line. This means that the new DVC unit will not function if the new EEPROM is used in the condition in which it is delivered.
When replacing the DV MAIN board, load the internal data of the EEPROM on the original board to the EEPROM of the new board.

(1) How to use original EEPROM to new DV MAIN board.
Remove the EEPROM from the original DV MAIN board, and attach the chip to the new board.

(2) How to write data from the original board to the new EEPROM
How to load all parameters in EEPROM on original board to new EEPROM by using the adjustment software.
(For details, see section 3.7.13 of the service manual for GY-DV500 No. 60125)

(3) In case of original EEPROM on the original DV MAIN board was broken.
Load the default data before making adjustments with the adjustment software, write the data in the new EEPROM, then make adjustments by following the adjustment procedures. (See section 3.7.12 of the service manual for GY-DV500 No. 60125 for details.)
And then, input the ID number on the original board to new EEPROM by using the adjustment software. (See section 3.7.13 of the service manual for GY-DV500 No. 60125 for details.)

1.10.2 SS/CP board

[A] Transporting of IC407 (EEPROM) Data

When the SSF function is used, the cassette number recorded on tape (see section 9.4.1 of the service manual for GY-DV500 No. 60125) has the model ID code appended to it. The model ID code is written in IC415 (EEPROM). However, as the new EEPROM mounted on the new replacement circuit board does not have the ID code written into it, the SSF function cannot work normally (the model ID code should be written in IC415 for the correct operation of the SSF function).
Nevertheless, no means is provided for transporting the model ID code from the original EEPROM to the new EEPROM. Therefore, it is recommended to remove the original IC from the original board and mount it on the new board.

[B] ID Management Label

An ID management label is attached to the camera head. For the position, see Fig. 1-5-7(2).

.11 FUNCTIONS OF INTERNAL SWITCHES

.11.1 DIP Switch S901 on SS/CP Board

Symbol	No.	Name	Function	Shipment
S901	1	Adjustment mode	Adjustment mode ON/OFF	OFF
	2	Check mode	Check mode ON/OFF	OFF
	3	Factory use	Always set this to OFF.	OFF
	4	RM startup mode	Switches the BACK TALLY lamp blinking ON/OFF when the RM mode starts up.	ON
	5	Blemish compensation	ON (triple)/OFF (single)	OFF
	6	Not used		OFF
	7	Not used		OFF
	8	Function setting	Initial setting of camera functions	OFF

Table 1-11-1(1)

1) Adjustment mode (S901-1)
Set S901-1 to ON to initiate the camera electrical adjustment mode.
For details, see section 3.3.

2) Check mode (S901-2)
Set S901-2 to ON to display the camera's check mode on the viewfinder or the monitor out screen. (Refer to page 48 of the instructions.)
In this mode, the auto white balance and auto iris control data in the microcomputer controlling the camera can be viewed and checked. (This mode is not used for adjustments but is intended to simply allow the checking of control values and their functions.)

```
- CHECK MODE -
R-G              : *
B-G              : *
R GAIN LEVEL     : *
B GAIN LEVEL     : *
PEAK             : *
APL              : *
NAM ERROR        : *
GAIN *dB         : *
```

Fig. 1-11-1

- R-G/B-G
Shows the data on the R/G/B signals input to the CPU for use in white balance control in terms of R-G and B-G. The values are variable between -127 and 128.
These values approach 0 if the white balance circuit is activated by capturing a non-color image such as a gray scale.

- R GAIN LEVEL/B GAIN LEVEL
Show the levels of the R and B channel white balance control signals.
These values are variable between 0 and 255.
The R value tends to decrease and the B value tends to increase under low color temperatures (reddish lighting), and the R value tends to increase and the B value tends to decrease under high color temperatures (bluish lighting).

- PEAK
Shows the peak hold value of the video signal in a vertical scanning period.

- APL
Shows the average picture signal level.

- NAM ERROR
Shows the NAM value used in the auto iris control.
The value is variable between -127 and 128.
The value approaches 0 when the auto iris control approaches the optimum level.

- GAIN
Shows the electrical gain value set with the GAIN switch on the right-hand side of the unit.
Shows "ALC" in the full auto-shooting mode.

(3) Factory use (S901-3)
If the S901-3 switch is set to ON, communication between the Camera CPU (IC901) and the SYSCON CPU (IC401) on the SS/CP board is cut and becomes abnormal. To avoid this occurrence, be sure to set the S901-3 switch to OFF.

(4) RM startup mode (S901-4)
If the GY-DV550 is to be started up by the power supply in the RM mode, this switch makes it possible to select whether or not the BACK TALLY lamp should blink (for about 30 seconds) in the period prior to the SW +12V (VF/LENS) power start up.

(5) Blemish compensation (S901-5)
Two different compensations are selectable.
One is regular "Single pixel" compensation and the other one is "Triple pixels".
The factory default setting is "Single", but if you have large level of blemish on CCD and can not be compensated enough, you can switch to "Triple pixels" to better compensation.
To activate "Triple pixels" compensation, turn the S901-5 to ON. "ERROR DETECT START" on Service Menu 2 should be re-adjusted after the change (see 1.12.2).

NOTE

If the "triple" pixel compensation is selected, abnormal pixels may be observed as a side effect of this compensation. To prevent this happening, it is recommended to select the "single" pixel compensation as a matter of course.

(6) Function setting (S901-8)
This switch is used to set the functions shown in Table 1-11-1(2).
This switch is usually used to switch the defaults of the domestic and export-oriented models.

Function		S901-8		
		NTSC		PAL
		OFF	ON	Do not care
GAIN	L	0 dB	0 dB	0 dB
	M	6 dB	9 dB	9 dB
	H	9 dB	18 dB	18 dB
V. SCAN		60.1 to 251.5	60.1 to 2084.6	50.1 to 2067.8
ALC GAIN		0 to + 18 dB	0 to + 18 dB	0 to + 18 dB

Table 1-11-1(2)

* The L/M/H positions of GAIN can also be set individually using the [CAMERA MENU].

1.12 MODES REQUIRED IN SERVICING (CAMERA)

NOTE

Various characters can be displayed on the viewfinder or the monitor out screen. (Refer to page 48 of the instructions.)

1.12.1 Service Menu 1 (Camera)

The "CAMERA SERVICE MENU" can be displayed on the screen by setting the [POWER] switch to ON while tilting the [AUTO WHITE/ACCU FOCUS] switch upward (toward AUTO WHITE).

```
——— CAMERA SERVICE MENU ———
        Cxxxx  V*. ** <U>
WHITE CLIP                  : 108%
COLOR MATRIX ADJUST..
END
```

Fig. 1-12-1

Select an item by turning the [SHUTTER] dial, and push the [SHUTTER] dial to select or set it.

(1) ROM VERSION
Cxxxx V*.**<U>
This item displays the version number of the camer control software (IC902 on SS/CP board).
* The Character "U" after the Version No. indicates that U version software is running. When "E" is shown here, the software for E version is running.

CAUTION

Also be sure to reset the system after replacing IC902 (ROM) on the SS/CP board. See section 1.12.4, "System Reset".

(2) WHITE CLIP
The white clip level of the through-camera output (overall output level) signal can be selected from the following two options.

100% or 108% (shipment setting)

(3) COLOR MATRIX ADJUST..
This mode makes it possible to set color-matrix parameters in details (see section 1.13).

* Note that the color-matrix adjustment is not a normal adjustment item. It is usually not required to adjust the color-matrix because this has been set to the optimum level before shipment.
* In case a color-matrix adjustment becomes necessary because of a user's request, it should be performed in accordance with the description in section 1.13.

1.12.2 Service Menu 2 (Camera)

The "ERROR DETECT MENU" can be displayed on the screen by setting the [POWER] switch to ON while tilting the [ZEBRA/SKIN AREA] switch rightward (toward SKIN AREA).

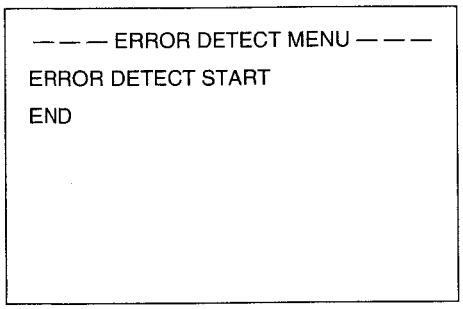

Fig. 1-12-2(1)

(1) ERROR DETECT START

When this item is selected and the [SHUTTER] dial is pushed, the white blemish detection for correcting CCD white blemish starts automatically.

The following messages are displayed on the screen during detection.

ERROR DETECT EXECUTING
↓
ERROR DETECT END

After the completion of error detection, the camera is automatically set to the white blemish correction ON condition.

The following types of white blemish can be corrected.

① White blemish correction target area

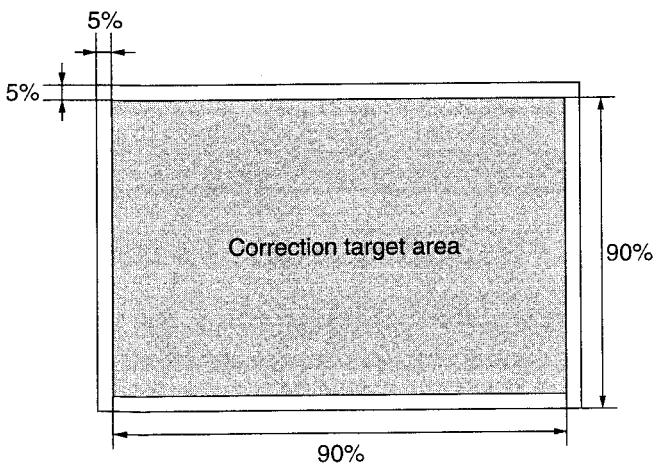

Fig. 1-12-2(2)

② Details of correctable white blemishes

- White blemishes at luminance levels of 30 mV or more can be corrected. The total number of white blemishes that can be corrected is up to 7 for the R, G and B signals.
- Even when there are 2 white blemishes on a single scanning line, both of them can be corrected. (However, when they are adjacent, the results of a correction appear inferior to those of the results of the correction of a single white blemish. These results are due to the correction characteristics themselves.)

1.12.3 Service Menu 3 (Camera)

The "CCD SPOT MENU" can be displayed on the screen by settiing the [POWER] switch to ON while tilting the [ZEBRA/SKIN AREA] switch rightward (toward SKIN AREA) and [AUTO WHITE/ACCU FOCUS] switch downward (toward ACCU FOCUS).

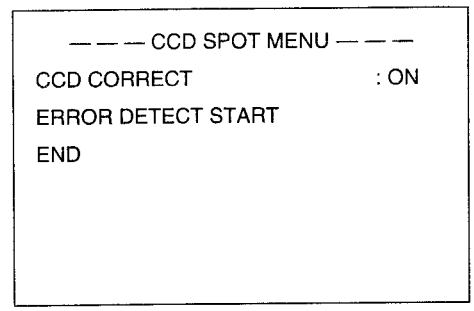

Fig. 1-12-3

(1) CCD CORRECT (ON/OFF)

This item sets whether white blemish due to CCD is to be corrected or not.

To correct : ON (shipment setting)
Do not correct : OFF

Even when OFF is selected with this menu, it is temporary and the correction status (ON) is recalled automatically the next time the power is turned on.

NOTE

- To correct any white blemish interference produced after the factory shipment, perform the "ERROR DETECT START" (see section 1.12.2). Be sure to warm up the camera by leaving it on for more than 2 hours before performing the "ERROR DETECT START".
- The white blemish correction is performed with the lens iris closed or with the lens cap on. In normal use, the lens iris closes automatically when performing a white blemish correction. However in a case when the lens cable is disconnected and the lens iris cannot be closed, "ERROR DETECT FAIL" will be displayed on the screen and the white blemish correction cannot be executed. Before performing the white blemish correction again, be sure to first close the lens.

1.12.4 System Reset

While pushing the [SHUTTER] dial, press the [POWER] switch to ON. This resets the system and initializes the menu set items and DSP data to their default values.

NOTE:

The adjustment values set by using the adjustment menus are not reset in the above operation.

1.12.5 Displaying Auto Iris Area Gate

While holding the [AUTO WHITE/ACCU FOCUS] switch down (toward ACCU FOCUS), press the [POWER] switch to ON. The area gate for the auto iris control is displayed in the screen.

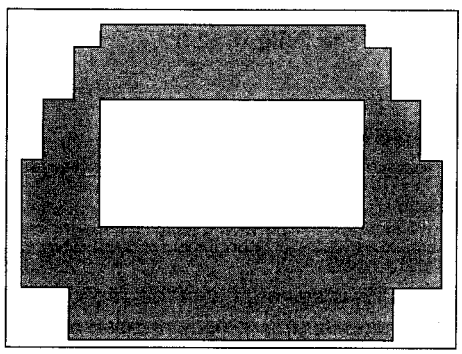

Fig. 1-12-4

1.12.6 List of Servicing Switches (Camera)

The following table that shows the switches described above is for use in servicing. Use this table as a reference in servicing.

Switch Operation	Result
[AUTO WHITE] + [POWER] ON	Service menu 1 display
[SKIN AREA] + [POWER] ON	Service menu 2 display
[SKIN AREA] + [ACCU FOCUS] + [POWER] ON	Service menu 3 display
[SHUTTER] + [POWER] ON	System reset
[ACCU FOCUS] + [POWER] ON	Area gate display

Table 1-12-1

1.12.7 EEPROM in Camera

IC905 on the SS/CP board is an electrically erasable/rewritable EEPROM. It stores the following data.

- Camera adjustment data set in the adjustment mode.
- Settings in [CAMERA MENU].
- White blemish position coordinate data for use in white blemish correction.
- Auto white balance control data (A/B).
- Camera status at the last power OFF (positions of non-lock type switches, etc.).

Therefore, when retention of the above data becomes impossible due to a failure in the EEPROM or over the 1 million times of rewrite count, the EEPROM should be replaced with a new one and the data should then be re-set in it.

1.12.8 Tripod base

The tripod base provided with GY-DV550 is different from KA-510U.
To use KA-510U for GY-DV550, it requires to change to the front and rear bases used with GY-DV500.
Refer to page 5-8 of the service manual of GY-DV500 (No.60125) for the parts numbers.

1.13 CHANGING THE COLOR MATRIX SETTING

NOTE

The color reproduction properties of the color-matrix circuit built into the DSP can be re-set by varying the values of 9 parameters. However, as these parameters have been set at the factory to the default values based on detailed studies of the product development process, it is usually not recommended to alter them. Note that this adjustment is not a normal electrical adjustment item.
Should a re-adjustment of the color matrix (a color reproducibility change) be required as a result of a user request, etc., this should be performed only after studying and understanding the details of the following instructions.

1.13.1 Setting the Color Matrix

Preparation

The color matrix setting requires a color chart for use as a reference for color reproduction and a vectorscope. As we do not specify a color chart for this purpose, discuss the matter with any user requesting a custom setting and use a color chart to be agreed by the user.

Adjustment

The color-matrix circuit can be set using menus displayed on the screen.

MODE	:	M3	M2	M1	DATA
R※(R-G)	:	X	※	※	※
R※(R-B)	:	※	※	※	※
G+(G-R)	:	X	※	※	※
G–(G-R)	:	※	X	※	※
G+(G-B)	:	X	※	※	※
G–(G-B)	:	※	X	※	※
B+(B-G)	:	X	※	※	※
B–(B-G)	:	X	X	X	※
B※(B-R)	:	※	※	※	※
PAGE BACK					

Fig. 1-13-1

Use the following procedure.

(1) Open the service menu 1 (see section 1.12.1)
(2) Select the "COLOR MATRIX ADJUST.." and push the [SHUTTER] dial to display the color-matrix setting menu on the screen.
(3) Move the cursor (mark of "▒") to the desired item by using the [SHUTTER] dial.
(4) When the cursor set on the desired item, pushing the [SHUTTER] dial causes the selected item to blink. (This is the status of the value adjustment.)
(5) When the adjustment value is blinking, rotating the [SHUTTER] dial varies the adjustment value. The available adjustment values are "M3", "M2", "M1" which is 0 or 1, and "DATA" which is between 0 and 31.
(6) Select the "PAGE BACK" and push the [SHUTTER] dial. The color-matrix setting menu is canceled and the service menu 1 screen appears again.

NOTE

The settings are stored and reflected every time a value in an item is changed. The setting values marked "X" do not need to be changed.
The color matrix setting data is reset to the default values when the system reset (see section 1.12.4) is executed.

NOTE

If the [STATUS] switch is pressed during the value of some adjustment item is blinking, all of the data being set is reset to the default values.

1.13.2 Details of Setting Items

As described above, the color matrix setting consists of varying 10 items using 9 parameters. The following table shows a comparison of the setting items.

NOTE

The model diagrams in the table may be interpreted as follows.

(Example)
This diagram represents the display area of the vectorscope.

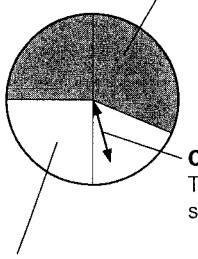

Inactive area:
Represents a vector area that is not affected by a currently selected setting item.

Color signal increase/decrease trend:
The increase or decrease trend can be selected with M1.
{ M1 = 0: Increasing trend
{ M1 = 1: Decreasing trend

Active area:
Represents the vector area that is affected by a currently selected setting item.
(The area can be selected with M3 or M2 depending on the item.)

MODE	Active Area Graph display	M3 0 : Active 1 : Inactive	M2 0 : Active 1 : Inactive	M1 0 : Increase 1 : Decrease	DATA 0 – 31
R±(R-G)	M2	×	0 or 1	0 or 1	※
R±(R-B)	M3 / M2	0 or 1	0 or 1	0 or 1	※
G+(G-R)	M2	×	0 or 1	0 or 1	※
G–(G-R)	M3	0 or 1	×	0 or 1	※
G+(G-B)	M2	×	0 or 1	0 or 1	※
G–(G-B)	M3	0 or 1	×	0 or 1	※
B+(B-G)	M2	×	0 or 1	0 or 1	※
B–(B-G)		×	×	×	※
B±(B-R)	M3 / M2	0 or 1	0 or 1	0 or 1	※

Table 1-13-1

1.14 SERVICE MENU (VCR)

1.14.1 Operation Method

When the [MENU] button is pressed, the setup menu appears on the screen to allow the user to perform setups. (For the contents of the setup menu, refer to page 72 of the instruction manual). Then, with the setup menu displayed, press the [MENU] button while holding down the [LOG] button to display the service menu.

To change a menu setting value, press the [DATA SET] button. The screen and counter display show the blinking "DATA SET" indicators and the set returns to normal mode.

To return to the setup menu, turn the power off and then on again.

1.14.2 Configuration of the Service Menu (Various Charactes can be Displayed on the Viewfinder or the Monitor Out Screen)

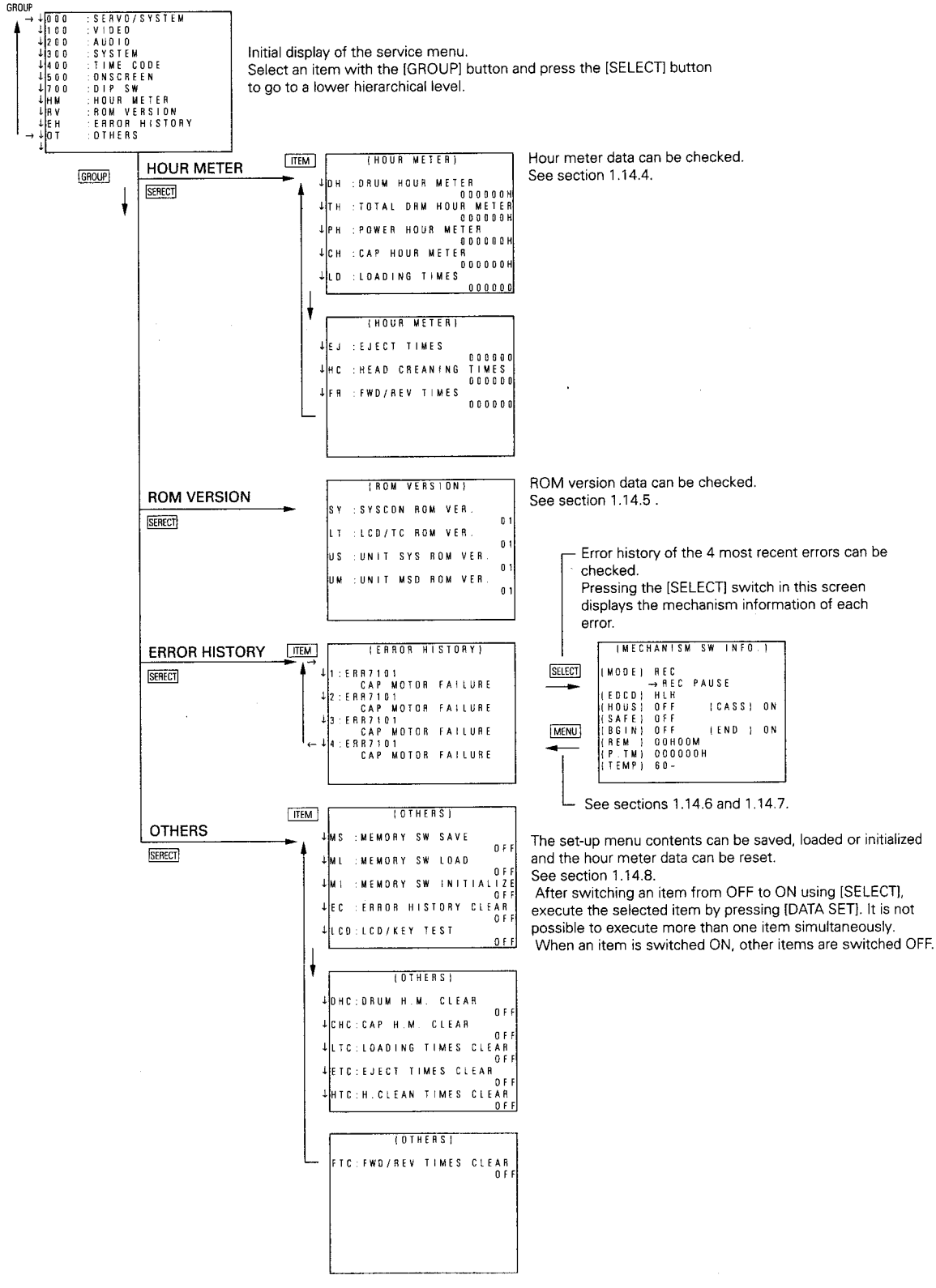

1.14.3 Contents of User Menu and Service Menu

CAUTION

The initial setting is that which is set during "MEMORY SW INITIALIZE".

Group	Item	Settings	Counter Display	Initial Setting	Description
000 SERVO/ SYSTEM	002: OPERATION LOCK	ON OFF	002 01 00	OFF	Operation lock setting.
	050: REMOTE SELECT	LOCAL IEEE1394 IEEE1394 + RS232C	rMSL Lc 1E 23	LOCAL	User setup menu (Refer to page 74 of the instruction manual.)
	052: STEP SLOW MODE	FIELD FRAME	StEP Fd Fr	FRAME	User set up menu (Refer to page 74 of the instruction manual.)
	080: BATTERY SHUTDOWN V	10.5 – 12.0 V (0.1V step)	bE 105	10.5V	Battery empty detection voltage setting.
	081: BATTERY ALARM V	10.5 – 12.0 V (0.1V step)	bA 110	11.0V	Battery alarm detection voltage setting.
	082: BACK TALLY MODE	BLINK OFF ON	rtnd bL oF on	BLINK	User setup menu (Refer to page 74 of the instruction manual.)
	083: FRONT TALLY MODE	BLINK ON	083 03 01	BLINK	Select the front tarry BLINK: Blinking ON: Lighting
100 VIDEO	126: INPUT SELECT	CAMERA IEEE1394	u id cn 1E	CAMERA	Input signal selection User setup menu (Refer to page 74 of the instruction manual.)
200 AUDIO	244: LOW CUT	OFF CH1 CH2 . CH1&CH2	LctF oF 01 02 on	OFF	User setup menu (Refer to page 74 of the instruction manual.)
	245: SAMPLING RATE	32K 48K	SMPL 48 32	48K	User setup menu (Refer to page 74 of the instruction manual.)
	246: CH1 FRONT VR ENABLE	DISABLE ENABLE	FruL oF on	ENABLE	User setup menu (Refer to page 74 of the instruction manual.)
	257:AUDIO REF.SIGNAL LEV	–20dB –12dB	ArEF 20 12	–20dB	User setup menu (Refer to page 74 of the instruction manual.)
300 SYSTEM	302: BACK SPACE	STANDARD QUICK	b-SP St QU	STANDARD	User set up menu (Refer to page 75 of the instruction manual.)
	303: WARNING DISABLE	ENABLE DISABLE	303 00 01	ENABLE	ENABLE: Warning enabled. DISABLE: Warning disabled.
	305: REC REPEAT	OFF ON	305 00 01	OFF	OFF: REC Full Repeat enabled. ON: REC Full Repeat disabled.
	306: LONG PAUSE DISABLE	ENABLE DISABLE	306 00 01	ENABLE	ENABLE: Long pause is canceled after specified period of time (set using Menu 307). DISABLE: Long pause is not canceled.
	307: LONG PAUSE TIME	3MIN 30MIN	LGPt 03 30	30MIN	User setup menu (Refer to page 75 of the instruction manual.)
	396: BATTERY TYPE	12V 13.2V 14.4V	bAtt 12 13 14	12V	User setup menu (Refer to page 75 of the instruction manual.)
	398: SSF MODE	OFF CUE MODE MARK MODE	SSF oF cU Mr	OFF	User setup menu (Refer to page 75 of the instruction manual.)
	399: REMOTE FF/REW MODE	FF/REW SEARCH	rEFF FF SH	FF/REW	User set up menu (Refer to page 75 of the instruction manual.)
400 TIME CODE	403: U-BIT SLAVE	TC + UB TC	UbSL on oF	TC + UB	User set up menu (Refer to page 75 of the instruction manual.)
	406: USERS BIT GROUP	NOT SPECIFIED ISO CHAR UNASSIGNED1 UNASSIGNED2	406 00 01 02 03	NOT SPECIFIED	User bit's binary group flag setting
	416: NON DROP/DROP (Only U-ver.)	DROP NON DROP	tcG dF nF	DROP	User setup menu (Refer to page 75 of the instruction manual.)
500 ON SCREEN	516: DISPLAY SELECT	TC CLOCK	diSP tc cL	TC	User setup menu (Refer to page 75 of the instruction manual.)

Group	Item	Settings	Counter Display	Factory Default	Description
700 DIP SW	700: DIP SWITCH-0	OFF ON	700 00 01	OFF	Operate LED display switching OFF: Blinks in amber when the cassette cover is opened. ON: Extinguished when the cassette cover is opened.
	701: DIP SWITCH-1	OFF ON	701 00 01	OFF	OFF: Other operations than ejection are inhibited when the cassette cover is opened. ON: Operations are valid even when the cassette cover is opened.
	708:DIP SWITCH-8	OFF ON	708 00 01	ON	The detection level of the "HEAD CLOG" warning selection. OFF: More than 4000 error rate. ON: More than 8000 error rate.
	702: DIP SWITCH-2 to 715: DIP SWITCH-15 (except 708 : DIP SWITCH-8)	OFF ON	702 00 01 to 715 00 01	All OFF	Switching inhibited. Must be set to OFF.

Operations are not accepted when the cassette cover is open. Therefore, DIP switch-0 and -1 can be used in checking the operation when the side cover is open or in the compatibility adjustment.

1.14.4 HOUR METER

This screen allows the data of hour meters to be checked.

Item	Counter Display	Description	Max. Display Hours/Count
DRUM HOUR METER	dH******	Displays the drum rotation hours.	999999H
TOTAL DRM HOUR METER	tH******	Displays the total drum rotation hours. This data cannot be reset.	999999H
POWER HOUR METER	PH******	Displays the power ON hours. This data cannot be reset.	999999H
CAP HOUR METER	cH******	Displays the capstan motor rotation hours.	999999H
LOADING TIMES	Ld******	Displays the loading count.	999999TIMES
EJECT TIMES	EJ******	Display the ejection count.	999999TIMES
HEAD CLEANING TIMES	Hc******	Displays the active cleaning head operation count.	999999TIMES
FWD/REV TIMES	Fr******	Displays the forward or reverse operation count	999999TIMES

****** are the figures of time (or count).

1.14.5 ROM VERSION

This screen allows the ROM versions to be checked.

Item	Counter Display	Board Name Symbol No.	Remark
SYSCON ROM VER.	SY **	SS/CP board IC403	PLSL1104-V1-**
LCD/TC ROM VER.	LL **	Audio/LCD board IC601	UPD78F0058GC0**
UNIT SYS ROM VER.	US **	DV MAIN board IC101	MN102F1617HL-**
UNIT MSD ROM VER.	UN **	DV MAIN board IC401 ROM board IC1 (The MSD CPU program is written in IC401 and ROM board IC1.)	M31020EAVP-0** (U MODEL) M31020EAVP-1** (E MODEL) M29W102BB70N1** (The ROM version No. of PAL begins with "92".)

** is the version number.

1.14.6 ERROR HISTORY

This screen allows the history of the 4 most recent errors to be checked.

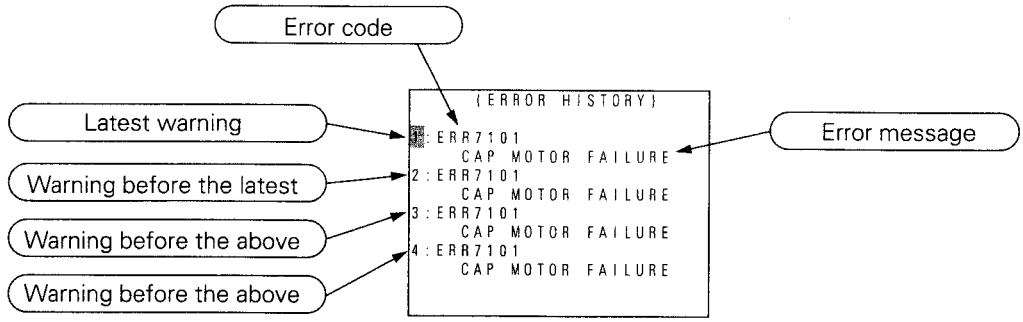

1.14.7 MECHANISM SW INFO

This screen allows the mechanism mode at each error to be displayed.

```
(MECHANISM SW INFO.)
(MODE) REC
       →REC PAUSE
(EDCD) HLH
(HOUS) OFF      (CASS) ON
(SAFE) OFF
(BGIN) OFF      (END ) ON
(REM ) 00H00M
(P.TM) 000000H
(TEMP) HIGH
```

Display

Item	Description	Input Pin	Display
(MODE)	Mode at the moment of VCR error & mode immediately before.	—	PLAY, STILL, REC, REC PAUSE, NO CASSETTE, EJECT, STNDBY-ON, FF, REW, SHTL, STILL, SHTL X10, SHTL X-10
(ECOD)	Rotary encoder output.	DV MAIN board IC401 Pin 44 → CAM0 Pin 45 → CAM1 Pin 46 → CAM2	Shows H or L according to the mechanism position. Rotary encoder terminal (ENCD) H L H CAM0 CAM1 CAM2
(HOUS)	Cassette housing switch status.	DV MAIN board IC401 pin 27	ON : Housing inserted/ejected status OFF : Housing operating status
(CASS)	Cassette switch status.	DV MAIN board IC401 pin 32	ON : Cassette tape inserted OFF : Cassette tape not inserted or during insertion /ejection
(SAFE)	REC safety switch status.	DV MAIN board IC401 pin 47	ON : Non-recordable tape inserted, cassette tape not inserted or during insertion /ejection OFF : Recordable tape inserted
(BGIN)	Tape begin sensor status.	DV MAIN board IC401 pin 126	ON : Tape leader section detected OFF : Magnetic tape section detected
(END)	Tape end sensor status.	DV MAIN board IC401 pin 125	ON : Tape leader section detected OFF : Magnetic tape section detected
(REM)	Remaining tape at the moment of error.	—	Remaining tape time
(P.TM)	POWER HOUR METER data at the moment of error.	—	POWER HOUR METER time
(TEMP)	Set's internal temperature at the moment of error	DV MAIN board IC101 pin 75	UNDER : under 10°C NORMAL : 10 to 40°C HIGH : 40 to 60°C OVER : over 60°C

1.14.8 OTHERS

This screen allows the setup menu to be saved temporarily, loaded or initialized.
To execute an item, switch it from "OFF" (displayed as "00") to "ON" (displayed as "01") with the [SELECT] button, then press the [DATA SET] button (excluding hour meter). As switching an item "ON" switches other items automatically "OFF", it is not possible to execute more than one item simultaneously.

Item	Counter Display	Factory Default	Description
MEMORY SW SAVE	nS 00	OFF	Saves the data set with the setup menu.
MEMORY SW LOAD	nL 00	OFF	Loads the data set for the setup menu.
MEMORY SW INITIALIZE	n, 00	OFF	Initializes the setup menu data to the factory defaults. The hour meter are not reset.
ERROR HISTORY CLEAR	Ec 00	OFF	Clears the error history.
LCD/KEY TEST	Lcd 00	OFF	Checks the lighting of operation key LEDs. After changing the setting to "START", press the [DATA SET] button. The screen and LCD display show "PERFORM" and the key test mode is set. In this mode pressing an operation key, lights the corresponding LED but does not cause the VCR to operate. To exit from the key test mode, change the setting to "STOP" and press the [DATA SET] button. The screen and LCD shows "PERFORM" and the normal mode is reset.
DRUM H.M. CLEAR	dHc 00	OFF	Resets the drum hour meter.
CAP H.M. CLEAR	cHc 00	OFF	Resets the capstan hour meter.
LOADING TIMES CLEAR	L7c 00	OFF	Resets the loading count.
EJECT TIMES CLEAR	E7c 00	OFF	Resets the ejection count.
H. CLEAN TIMES CLEAR	H7c 00	OFF	Resets the head cleaning count.
FWD/REV TIMES CLEAR	F7c 00	OFF	Resets the forward/reverse operation count

1.15 ALARM DETECTION METHODS

The unit incorporates the alarm display function, which notifies the user of the VCR status, remaining tape and remaining battery power. For the contents of the alarm display, see page 86 of the instruction manual. This section describes the methods applied for alarm detection.

Item	Description	Status After Detection	Detection Method
Servo lock error "SERVO" (Counter display) SYnc inh	When the drum rotation phase is deviated by more than 10 or when the capstan motor rotation speed is deviated by more than 20%.The alarm sound is generated in REC mode. The alarm display only appears in the PLAY mode. When external sync input signal SYNC IN is disturbed, "SYnc inh" (sync inhbit) is displayed.	Same mode is maintained.	The MSD microcomputer detects the drum rotation phase from the phase error between the TSR and HID signals. The capstan motor rotation speed is detected based on the CAP FG signal.
Head clog "RF" (Counter display) HEddCLo9	Measures the error rate during playback or quick review with RET button and displays "HEAD CLOG" when the viterbi is ON and exceeds 8000 (total).	Same mode is maintained.	—
Dew condensation "DEW"	When dew warning occurs with the VCR.	See error code "0201 DEW" in 1.19.	
Lithium battery exhaustion "Li"	When the built-in lithium battery for the timecode backup is exhausted or not installed.	Same mode is maintained.	Decrease in the battery voltage below 2.6 V.
Remaining battery	When the remaining battery power is low.	• Battery nearly empty: Operation is maintained. • Battery empty: Operation stops automatically.	Detects the voltage at system controller pin 62.

1.16 BATTERY POWER DETECTION METHODS

The battery voltage is detected to display the remaining power on the LCD. Since the detection voltage is variable depending on the 12 V/13.2 V/14.4 V battery types, correct settings should be made with the setup menu.

Detection voltage and remaining battery display

Display	Battery Type		
	12V	13.2V	14.4V
E BATT F	12.6V –	3.9V –	15.1V –
E BATT F ("F" off)	12.0V – 12.5V	13.2V – 13.8V	14.4V – 15.0V
E BATT F ("F" off)	11.8V – 11.9V	13.0V – 13.1V	14.2V – 14.3V
E BATT F ("F" off)	11.6V – 11.7V	12.8V – 12.9V	13.9V – 14.1V
E BATT F ("F" off)	11.3V – 11.5V	12.4V – 12.7V	13.6V – 13.8V
E BATT F ("F" off)	11.2V	12.3V	13.4V – 13.5V
E BATT F ("F" off, "BATT" blinking) (Segment blinking)	11.0V – 11.1V	11.6V – 12.2V	12.6V – 13.3V
E BATT F ("F" off, "BATT" blinking) (Segment blinking)	10.6V – 10.9V	10.6V – 11.5V	10.6V – 12.5V
E BATT F ("F" off, "BATT" blinking) (Segments off)	– 10.5V	– 10.5V	– 10.5V

1.17 EEPROMs in VCR

The EEPROMs are memories that can be erased or written electrically. As they hold the data required for VCR operations, adjustments and setup are required after replacing an EEPROM (also after replacing circuit boards). (see section 1.10) The following table shows the circuit boards and storage contents of the EEPROMs used in the set.

EEPROM	Stored Data	After Replacement
DV MAIN board IC103	Adjustment data for adjustment software	All data erased.
	Hour meter data	All data reset.
	Error history	All data erased.
	IEEE1394 ID data	ID data erased.
DV MAIN board IC106	Not used	–
SS/CP board IC415	Setup menu setting data	Reset to initial setting.

1.18 BACKUP OF TIME DATA

The GY-DV550 uses a lithium battery (BT601) to back up the LCD microcomputer on the AUDIO/LCD board assembly (Refer to page 36 of the instruction manual). The backed up data includes the following:

(1) TC generator data (In the free run mode, the count continues even during backup.)
(2) Date and time data for sub-codes.
(3) CTL counter data.

1.18.1 Backup Circuit

The backup current to the lithium battery is switched by IC618 on the AUDIO/LCD board. When voltage of IC618-pin 7 drops below 4.6 V, this IC switches the microcomputer power to the LCD to the lithium battery. At this time, IC618 sets the CS output to the Low level, the LCD microcomputer switches the clock oscillator to the power-saving X602 and functions in the sleep mode. The PRE END output is used to detect the battery voltage. Although it provides the feedback signal to the microcomputer.

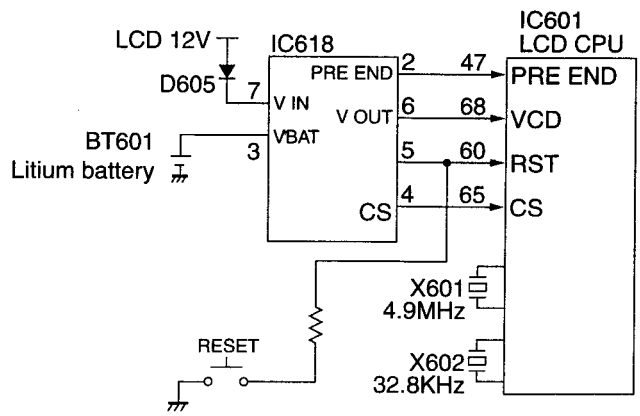

Fig. 1-18-1 Backup and Compulsory Reset Circuit

1.18.2 Compulsory resetting

Press the RESET switch (Refer to page 36 of the instructions) to compulsory reset the LCD CPU.

1.19 WARNING CODES

If a problem occurs during operation, the unit diagnoses the cause by itself, provides a warning through the "warning LED" and "buzzer", and displays the diagnosis results in the counter display.

[LCD counter]
Error display appears. (**** is the error code.)
Err-****
[Warning LED]
The red LED blinks (at about 4 Hz).

[Buzzer]
Generates a continuous tone. However, the tone is intermittent (at about 4 Hz) in case of dew alarm.

0201 Condensation
- •VCR operation
  - In save mode:
  - · If a cassette is loaded, enters the AUTO OFF mode.
  - · If a cassette is not loaded, the warning LED lights and the SAVE mode is maintained.
  - In other modes:
  - · If a cassette is loaded, the AUTO OFF mode is initiated.
  - · If a cassette is not loaded, the warning LED lights and the drum rotates. An operation is accepted after any condensation has evaporated.
- •Cause : Condensation of moisture.
- •Detection method : Check the voltage at the pin 124 of IC401.
  DEW ON : 2.4 V or more
  DEW OFF : 1.8 V or less

0601 WRONG CASSETTE TYPE
- •VCR operation : The AUTO OFF mode is initiated.
- •Cause : A wrong type of cassette for the computer is inserted.
- •Detection method : An error in the cassette type is detected (at pins 117, 118 and 119 of IC401) after the insertion is completed.

3200 LOADING INCOMPLETE
- •VCR operation : The AUTO OFF mode is initiated.
- •Cause : Malfunction of the loading motor, rotary encoder or mechanism.
- •Detection method : The rotary encoder output is checked (at pins 44, 45 and 46 of IC401) and an error is detected when loading has not completed in 4 seconds.

3300 UNLOADING INCOMPLETE
- •VCR operation : After the first unloading error, the cassette is loaded temporarily, then unloading is retried. If the retry fails again, the AUTO OFF mode is initiated.
- •Cause : Malfunction of the loading motor, rotary encoder or mechanism.
- •Detection method : The rotary encoder output is checked (at pins 44, 45 and 46 of IC401) and an error is detected when unloading has not completed in 4 seconds.

4100 EJECTION INCOMPLETE
- •VCR operation : The AUTO OFF mode is initiated.
- •Cause : Malfunction of the cassette housing switch or cassette housing motor.
- •Detection method : When completion of ejection is not detected (at pin 27 of IC401) within 3 seconds after the start.

5605 TAPE BEGIN/END DETECTED SIMULTANEOUSLY
- •VCR operation : The AUTO OFF mode is initiated.
- •Cause : Tape is cut due to abnormal tension or a mechanism defect or because the cassette was inserted while the tape was slack.
- •Detection method : When both the tape begin sensor (at pin 126 of IC401) and the tape end sensor (at pin 125 of IC401) output Low level together when a cassette is loaded.

5606 SP REEL RUNAWAY DURING UNLOADING
- •VCR operation : The AUTO OFF mode is initiated.
- •Cause : Tape is cut due to abnormal tension or a mechanism defect or because the cassette was inserted while the tape was slack.
- •Detection method : When the detected TU reel rotation count (at pin 59 of IC401) exceeds 30 revs. per sec. (1200 pulses) during unloading.

5607 TU/SUP REEL STOPPED DUE TO A CUT TAPE

- •VCR operation : The AUTO OFF mode is initiated.
- •Cause : Tape is cut due to abnormal tension or a mechanism defect or because the cassette was inserted while the tape was slack.
- •Detection method : When the FGs from the SUP and TU reels were not detected at all (at pins 59 and 60 of IC401) during loading.

5702 TAPE END DETECTED AFTER SHORT REW

- •VCR operation : The AUTO OFF mode is initiated.
- •Cause : Tape is cut after the end of the tape has been detected. The mode transition of the mechanism failed.
- •Detection method : When the tape end sensor output (at pin 125 of IC401) remains Low even after 3 seconds have elapsed since the start of the short REW operation following the tape end detection in play mode, etc.

5802 TAPE BEGIN DETECTED AFTER SHORT FF

- •VCR operation : The AUTO OFF mode is initiated.
- •Cause : Tape is cut after the end of the tape has been detected. The mode transition of the mechanism failed.
- •Detection method : When the tape begin sensor output (at pin 126 of IC401) remains Low even after 3 seconds have elapsed since the start of the short FF operation following the tape beginning detection in the reverse search mode, etc.

7001 DRUM MOTOR ROTATION ERROR

- •VCR operation : The AUTO OFF mode is initiated.
- •Cause : Malfunction of the drum motor, MDA circuit or FG detector circuit.
- •Detection method : When the drum FG has not been detected (at pin 54 of IC401) for more than 4 seconds in the drum driving mode.

7101 CAPSTAN MOTOR ROTATION ERROR

- •VCR operation : The AUTO OFF mode is initiated.
- •Cause : Malfunction of the capstan motor, MDA circuit or FG detector circuit.
- •Detection method : When the drum FG has not been detected (at pin 55 of IC401) for more than 2 seconds in the capstan driving mode.

7202 SUP TAPE SLACK DURING CAPSTAN DRIVE

- •VCR operation : The AUTO OFF mode is initiated.
- •Cause : The timing belt is cut or one of the reel control parts in the mechanism is malfunctioning.
- •Detection method : When the SUP reel FG has not been detected (at pin 60 of IC401) during 5 rotations of the capstan in the capstan driving mode.

7302 TU TAPE SLACK DURING CAPSTAN DRIVE

- •VCR operation : The AUTO OFF mode is initiated.
- •Cause : The timing belt is cut or one of the reel control parts in the mechanism is malfunctioning.
- •Detection method : When the TU reel FG has not been detected (at pin 59 of IC401) during 5 rotations of the capstan in the capstan driving mode.

7305 NO TU REEL ROTATION DURING UNLOADING

- •VCR operation : The AUTO OFF mode is initiated.
- •Cause : Malfunction of the cassette housing switch or cassette housing motor.
- •Detection method : When the TU reel rotation detected (at pin 59 of IC401) during unloading is less than 1/2 turn.

1.20 ANALYSIS OF BLOCK NOISE (SYMPTOMS: POOR VIDEO, ABSCNCE OF AUDIO)

1.20.1 Analysis Flow Chart

In case of trouble, perform troubleshooting using the following flow chart.

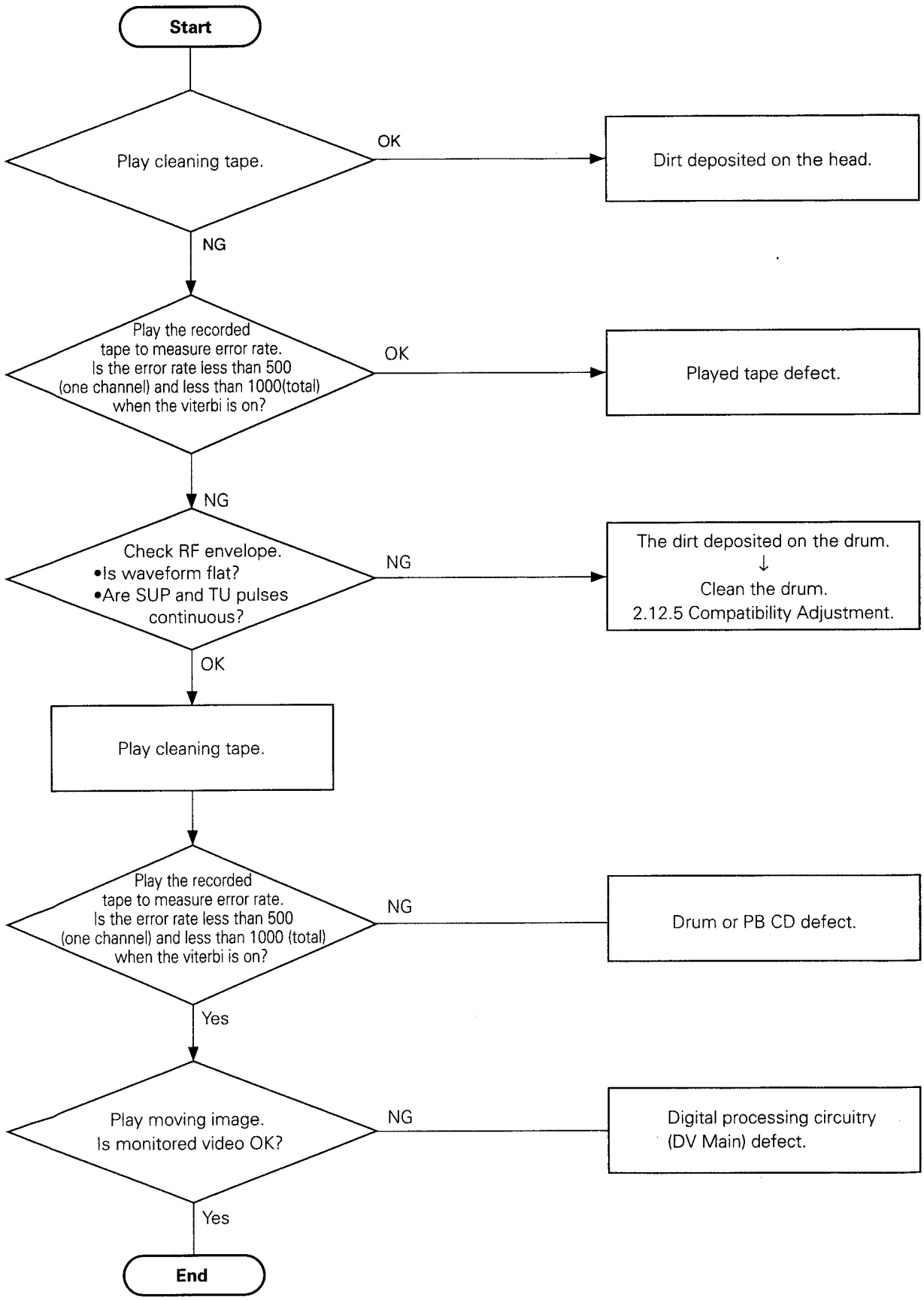

1.20.2 RF Envelope Check

Symptom Observed on Monitor Screen	RF envelope	Audio, etc.	Possible Causes
Block noise on left 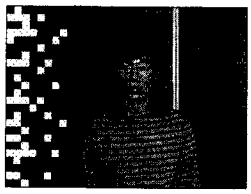	SUP dropout 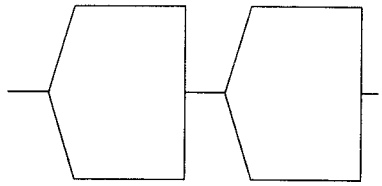	• No audio output. • Intermittent audio.	• Supply guide roller adjustment failure. • Dirt on supply side of drum.
Block noise on right 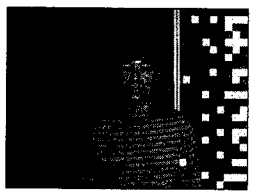	TU dropout 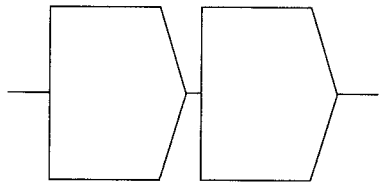	• Timecode not counted.	• Take-up guide roller adjustment failure. • Dirt on take-up side of drum.
One CH frozen 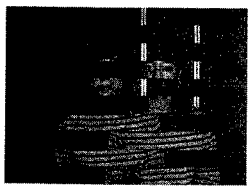	No video output from one CH 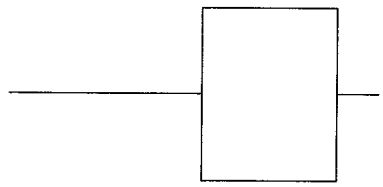	• Audio is output.	• Dirt attached on one CH of head. • Drum assembly defective. • PR & MDA board IC901 defective.
Frozen	Low level 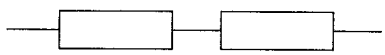	• No audio output.	• Dirt attached on head. • Drum assembly defective.

The RF envelope condition can be confirmed to a certain degree in the Error Rate adjustment display.

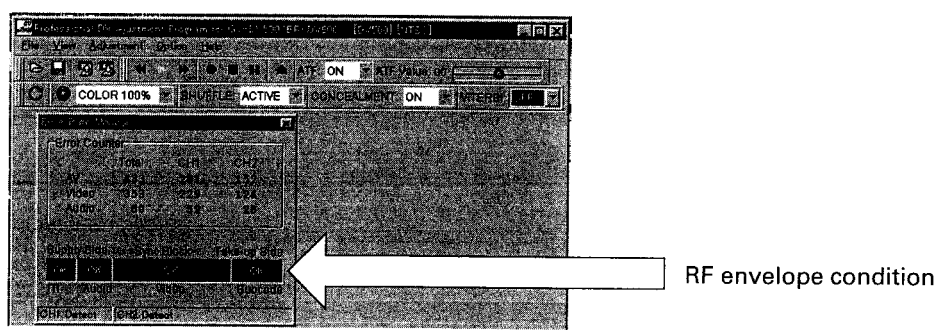

SECTION 3
ELECTRICAL ADJUSTMENTS

This section only describes the camera part of the electrical adjustment.
On servicing, refer to the service manual (No. 60125) for GY-DV500 together with this.

3.1 FLOWCHART OF ELECTRICAL ADJUSTMENTS

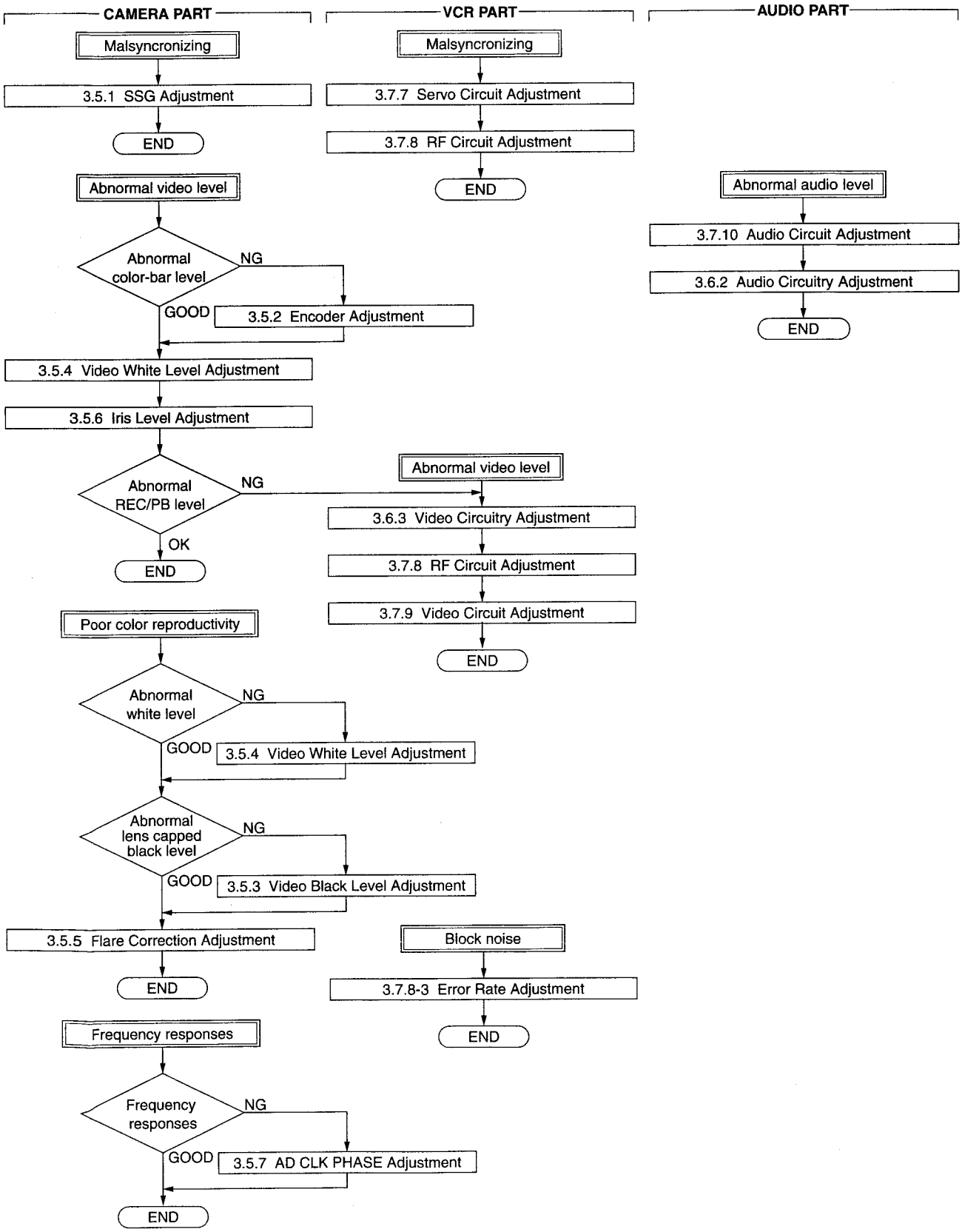

3.2 FUNCTIONS REQUIRED FOR ADJUSTMENTS, SETUP

3.2.1 General instruments necessary for adjustment

Instrument	Condition	Instrument	Condition
Oscilloscope	Calibrated instrument with a measuring bandwidth of 100 MHz or more.	Frequency counter	Instrument calibrated for 8 digits or more. Stability of 0.1 ppm or $1x10^{-7}$ or better is required at 0 to 40°C.
Vectorscope	Calibrated instrument		
Audio tester	Calibrated instrument	Monitor TV	Color video monitor with a 75Ω video input.

3.2.2 Special implements required for adjustment

1 Computor	2 Waveform monitor (WFM)	3 Gray scale chart
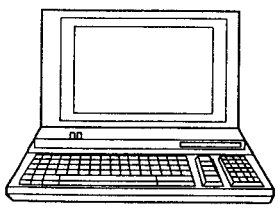 Windows 95 or NT	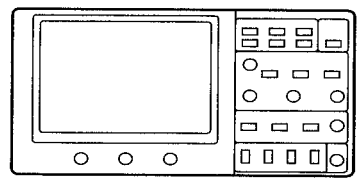	(Part No.:GS2L) 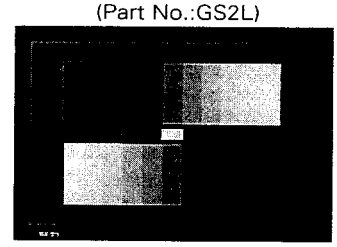
4 Lens	5 Viewfinder	6 Tripod base
S14X7.3B12 or equiv. 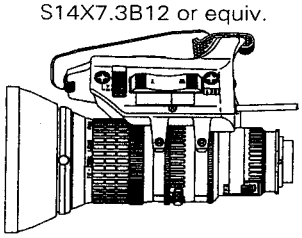	VF-P115B or equiv. 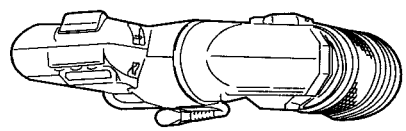	Accessory (Part No. : SCV3021-001) 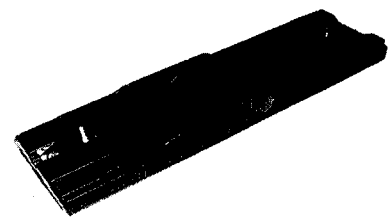
7 Power supply unit	8 Monitor TV	9 Alignment tape
AA-P250 or equiv. 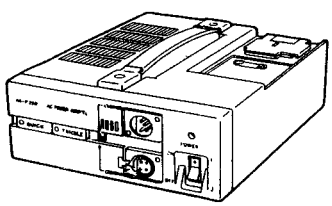	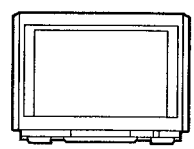	MC-1 : NTSC MC-2 : PAL 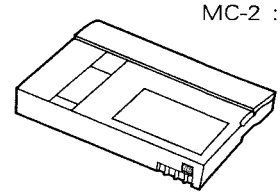
10 Connector cable PTU94018A	11 Adjustment software	12 PC cable QAM0099-001
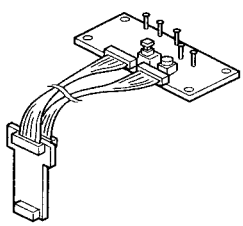	To be downloaded from WWW site of TS-NET Pro Video Division 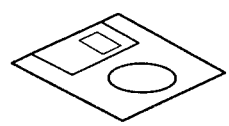	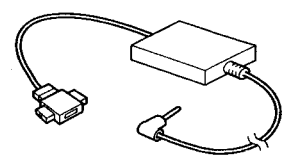
13 IN MEGA CYCLE CHART		
(Part No. : RESC-014) 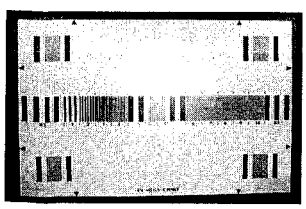		

Fig. 3-1-1 Special implements required for adjustment

3.3 STANDARD SETUP

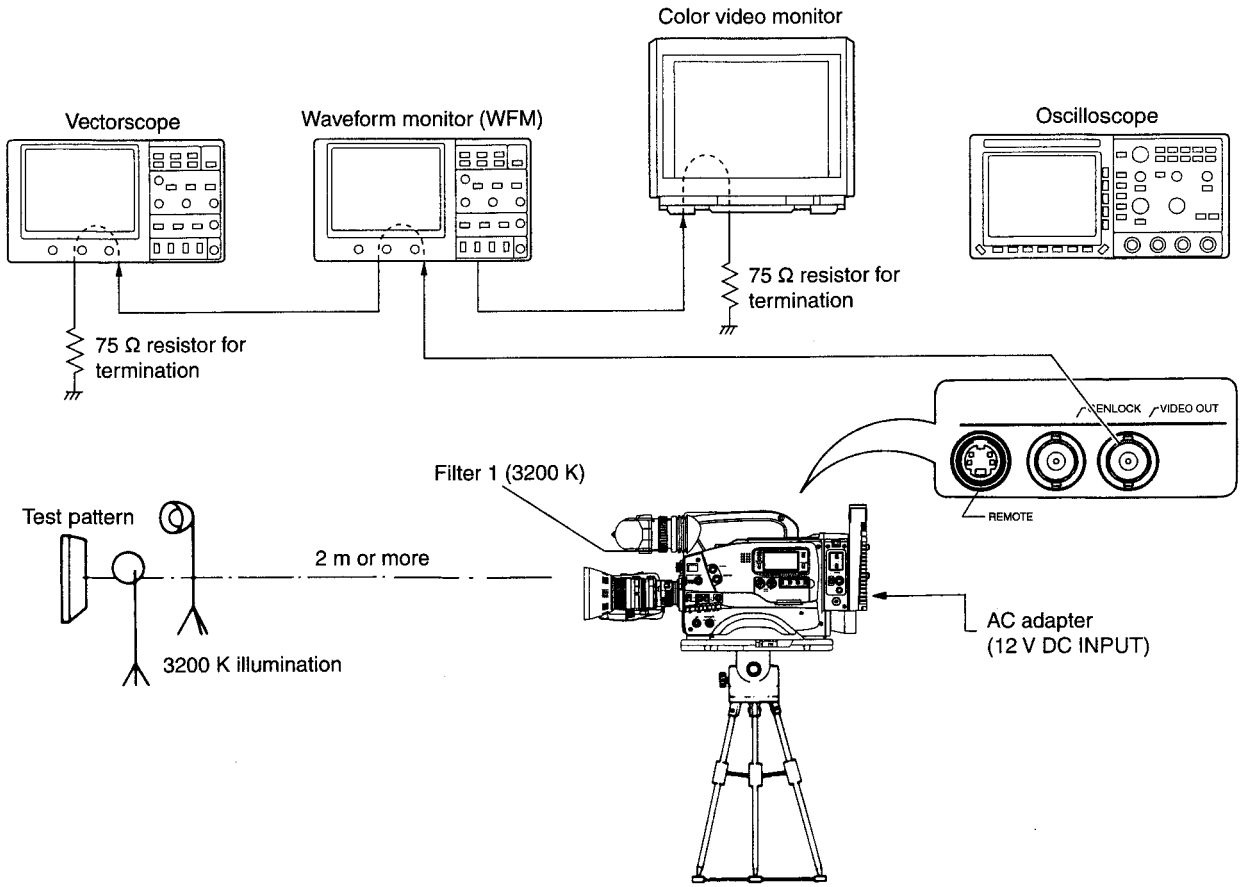

3.4 ADJUSTMENT MENU

3.4.1 Switches and Functions Used in Adjustments

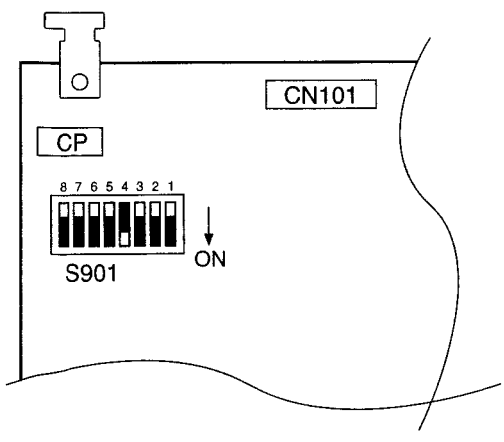

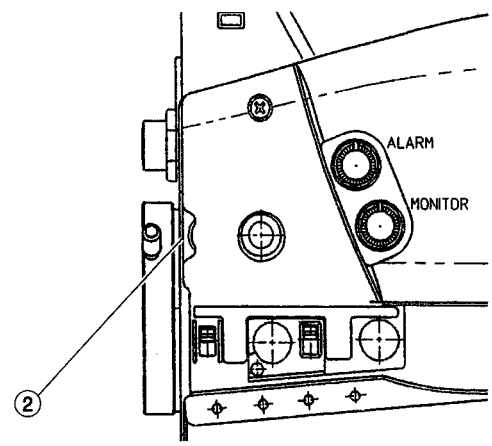

① S901-1 on SSCP board : Set to ON to display the adjustment menu on the viewfinder screen and enter the adjustment mode. Set to OFF to turn off the adjustment menu on the viewfinder screen and exit from the adjustment mode.

② SHUTTER/MENU dial : Used to select an adjustment item, adjust the selected item and store the adjusted value in memory.

3.4.2 Operation Procedure

(1) Open the right side cover and set the DIP switch S901-1 on the SSCP board to ON.
(2) When the cursor on the left of an item is blinking and the adjustment value is lit steadily, rotating the SHUTTER/MENU dial selects the adjustment item. Rotate this dial continuously to turn over the page of the MENU screen.
(3) When the cursor on the left of an item is blinking and the adjustment value is lit steadily, pushing the SHUTTER/MENU dial causes the selected item to blink.
(4) When the cursor on the left of an item is blinking and the adjustment value is blinking, rotating the SHUTTER/MENU dial varies the adjustment value.
(5) When the cursor on the left of an item is blinking and the adjustment value is blinking, pushing the SHUTTER/MENU dial stores the adjustment value in memory and returns to the adjustment item selection step.
(6) Set the DIP switch S901-1 on the SSCP board to OFF to exit from the adjustment mode.

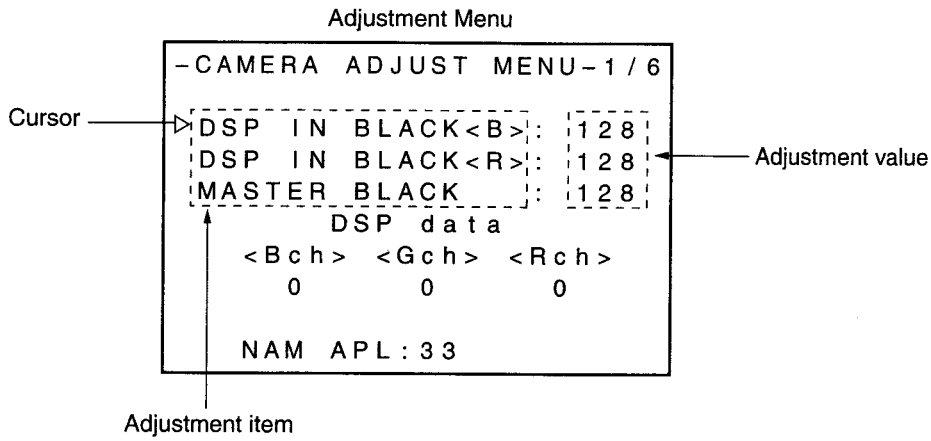

Cursor	Adjustment Value	SHUTTER/MENU Dial	
		Rotate	Push
Blinking	Steady lighting	Selects an adjustment item.	Adjustment value blinks.
Blinking	Blinking	Varies an adjustment value.	Stores adjustment value in memory.

Functions of SHUTTER/MENU Dial

3.4.3 Flowchart of ADJUST MENU

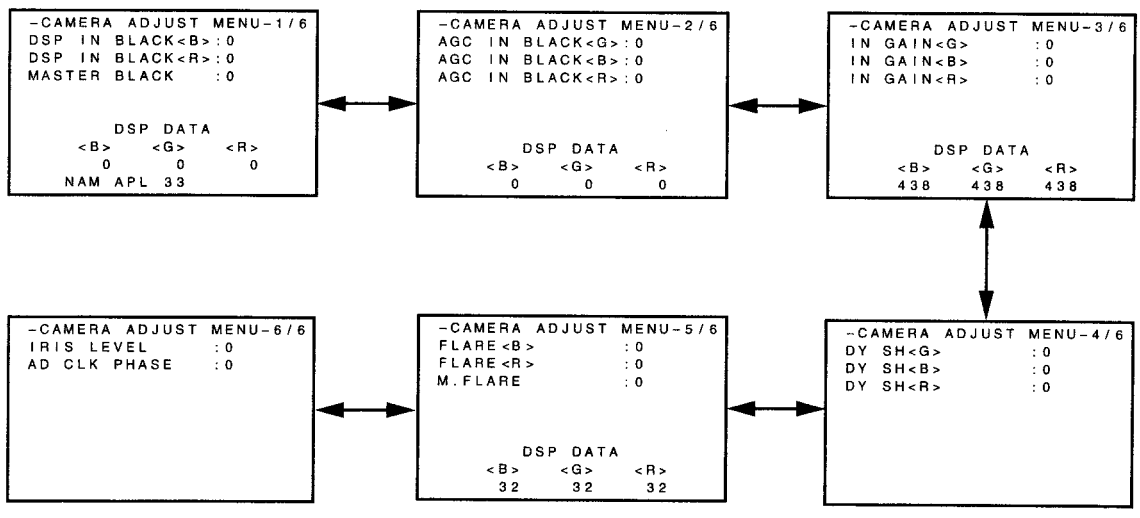

No.	Item	Measuring instruments & Input signals	Mode	Measuring point (◎) Adjustment parts (ⓣ) Adjustment level (☆)	Adjustment procedure

3.5 CAMERA ADJUSTMENTS

3.5.1 SSG Adjustment

1	fsc frequency adjustment	• Frequency counter		◎ TP4 (SE) ⓣ VR1 [SE] ☆ NTSC: 14.31818 MHz ± 40 Hz PAL: 17.73447 MHz ± 40 Hz	(1) Open the right side cover. (2) Adjust VR1 on the SE board to the specified level.

3.5.2 Encoder Adjustments

1	CARRIER BLANCE Adjustment	• Vectorscope or Oscilloscope	Color bar output	◎ VIDEO OUT (75 Ω terminated) ⓣ [NTSC] VR303 (SE) VR403 (SE) [PAL] VR302 (SE) VR303 (SE) VR402 (SE) VR403 (SE) ☆ Aligns so that the carrier dot is located at the center of the vectorscope.	(1) Set the vectorscope GAIN at the maximum level. (2) Adjust each VR on the SE board so that the carrier dot comes to the center of the vectorscope. * When using a vectorscope during adjustments, adjust the white and black carrier leaks to their minimum levels.
2	VIDEO OUT LEVEL adjustment	• Oscilloscope (H-rate, 10:1) or WFM	Color bar output	◎ VIDEO OUT (75 Ω terminated) ⓣ VR201 [SE] ☆ 1 Vp-p ± 0.003 Vp-p (140 IRE ±4 IRE)	(1) Open the right side cover. (2) Adjust VR201 on the SE board to the specified level.
3	CHROMA LEVEL adjustment	• Oscilloscope (H-rate, 10:1) or WFM • Vectorscope	Color bar output	◎ VIDEO OUT (75 Ω terminated) ⓣ VR404 (SE) ☆ All the spots of the color bar signal should be within the ⊞ marks of the vectorscope and the burst level should be as specified. NTSC: 0.286 ± 0.015 Vp-p PAL: 0.3 ± 0.015 Vp-p	(1) Open the right side cover. (2) Adjust VR404 on the SE board to the specified level.

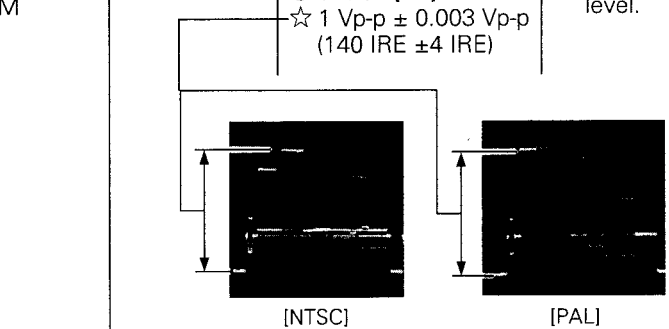

[NTSC] [PAL]

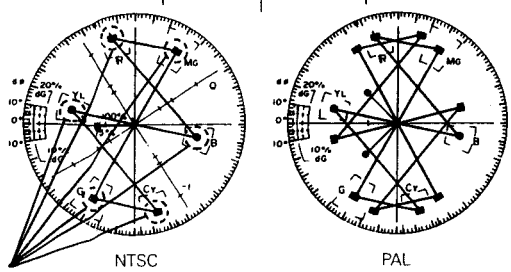

NTSC PAL

Adjust so that all the spots are located inside the ⊞ marks.

CAM2 board

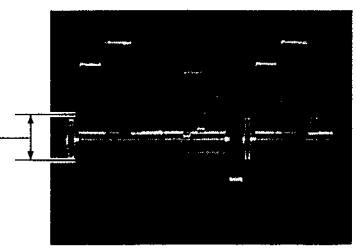

No.	Item	Measuring instruments & Input signals	Mode	Measuring point (◎) Adjustment parts (ⓘ) Adjustment level (☆)	Adjustment procedure

3.5.3 Video Black Level Adjustments

1 DSP IN BLACK adjustment

- Oscilloscope (H-rate, 10:1) or WFM
- Vectorscope
- Lens capped or iris closed.

Mode: Adjustment menu 1/6

◎ TEST OUT (75 Ω terminated)
ⓘ SHUTTER/MENU dial

```
-CAMERA ADJUST MENU-1/6
▷DSP IN BLACK<B>:O
 DSP IN BLACK<R>:O
 MASTER BLACK    :O

      DSP data
<Bch>  <Gch>  <Rch>
  0      0      0

NAM APL:33
```

☆ Position the noise on the B-Y_L axis at the center of the vectorscope.

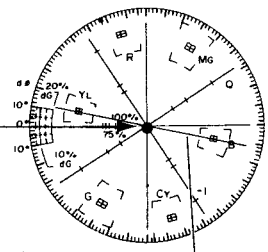

B-Y_L axis

(1) Open the right side cover and set the DIP switch S901-1 on SSCP board to ON.
(2) Rotate the SHUTTER/MENU dial to select MENU 1/6: DSP IN BLACK <B>.
(3) Push the SHUTTER/MENU dial so that the adjustment value blinks then rotate it to adjust to the specified level.
(4) Push the SHUTTER/MENU dial to store the adjustment data in memory.

```
-CAMERA ADJUST MENU-1/6
 DSP IN BLACK<B>:O
▷DSP IN BLACK<R>:O
 MASTER BLACK    :O

      DSP data
<Bch>  <Gch>  <Rch>
  0      0      0

NAM APL:33
```

☆ Position the noise on the R-C_Y axis at the center of the vectorscope.

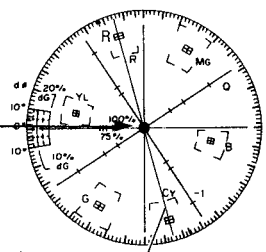

R-C_Y axis

(5) Rotate the SHUTTER/MENU dial to select MENU 1/6: DSP IN BLACK <R>.
(6) Push the SHUTTER/MENU dial so that the adjustment value blinks, then rotate it to adjust to the specified level.
(7) Push the SHUTTER/MENU dial to store the adjustment data in memory.

☆ Position NAM APL at the center of 33 MASTER BLACK variation range.

```
-CAMERA ADJUST MENU-2/6
 DSP IN BLACK<B>:O
 DSP IN BLACK<R>:O
▷MASTER BLACK    :[O]

      DSP data
<Bch>  <Gch>  <Rch>
  0      0      0

NAM APL:[33]
```

(8) Rotate the SHUTTER/MENU dial to select MENU 1/6: MASTER BLACK.
(9) Push the SHUTTER/MENU dial so that the adjustment value blinks, then rotate it to adjust to the specified level.
(10) Push the SHUTTER/MENU dial to store the adjustment data in memory.

(11) Check the following condition.

NTSC	5.3 ± 7 Vp-p
PAL	0 ± 7 Vp-p

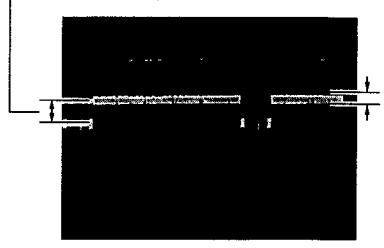

Carrier: less than 30 mVp-p

No.	Item	Measuring instruments & Input signals	Mode	Measuring point (◎) Adjustment parts (⇧) Adjustment level (☆)	Adjustment procedure
2	AGC IN BLACK adjustment	• Oscilloscope (V-rate, 10:1) or WFM • Lens capped or iris closed. • Vectorscope	Adjustment menu 2/6 GAIN SW H (+18 dB)	◎ VIDEO OUT (75 Ω terminated) ⇧ SHUTTER/MENU dial ☆ Minimize V shading.	(1) Set the GAIN SW to H (+18 dB). (2) Rotate the SHUTTER/MENU dial to select MENU 3/6: AGC IN BLACK <G>. (3) Push the SHUTTER/MENU dial so that the adjustment value blinks then rotate it to adjust to the specified level. (4) Push the SHUTTER/MENU dial to store the adjustment data in memory.
				☆ Minimize V shading.	(5) Rotate the SHUTTER/MENU dial to select MENU 3/6: AGC IN BLACK <B>. (6) Push the SHUTTER/MENU dial so that the adjustment value blinks then rotate it to adjust to the specified level. (7) Push the SHUTTER/MENU dial to store the adjustment data in memory.
				☆ Minimize V shading.	(8) Rotate the SHUTTER/MENU dial to select MENU 3/6: AGC IN BLACK <R>. (9) Push the SHUTTER/MENU dial so that the adjustment value blinks then rotate it to adjust to the specified level. (10) Push the SHUTTER/MENU dial to store the adjustment data in memory.
				Ensure that noise display is almost completely circular.	(11) Check that the noise display on the vectorscope is close to a true circle. If the circle is distorted, repeat (1) to (9) until it approaches a true circle. (12) Set the GAIN SW to L (0dB).

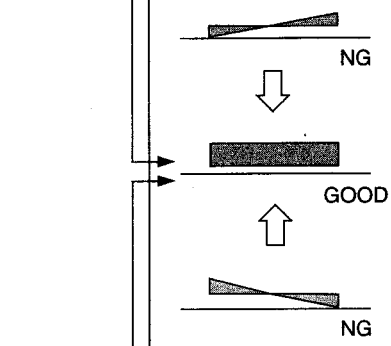

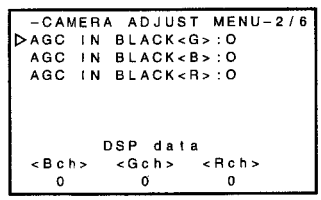

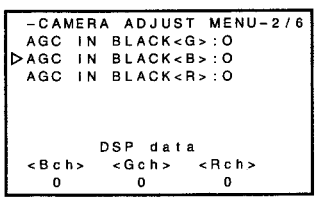

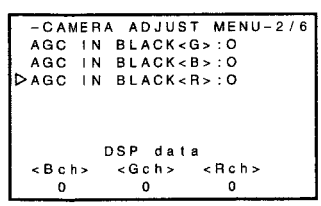

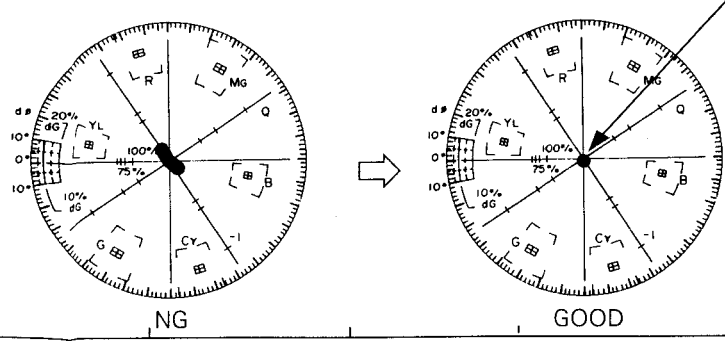

No.	Item	Measuring instruments & Input signals	Mode	Measuring point (◎) Adjustment parts (ⓣ) Adjustment level (☆)	Adjustment procedure

3.5.4 Video White Level Adjustments

No.	Item	Measuring instruments & Input signals	Mode	Measuring point (◎) Adjustment parts (ⓣ) Adjustment level (☆)	Adjustment procedure
1	IN GAIN adjustment	• Oscilloscope (H-rate, 10:1) or WFM • Gray scale chart (precisely scanned size)	Adjustment menu 3/6	◎ TP501 [CAM] ⓣ Lens iris ☆ 0.8 ± 0.01 Vp-p	(1) Rotate the SHUTTER/MENU dial to select MENU 3/6: IN GAIN <G>. (2) Shoot the gray scale chart and adjust the lens iris so that the white peak level is as specified.
				◎ VIDEO OUT (75 Ω terminated) ⓣ SHUTTER/MENU dial ☆ DSP DATA <G>: 103 ± 2	(3) Push the SHUTTER/MENU dial so that the adjustment value blinks then rotate it to adjust to the specified level. (4) Push the SHUTTER/MENU dial to store the adjustment data in memory.
				◎ VIDEO OUT (75 Ω terminated) ⓣ SHUTTER/MENU dial ☆ DSP DATA <B>: ± 2 of DSP DATA <G>	(5) Rotate the SHUTTER/MENU dial to select MENU 3/6: IN GAIN <B>. (6) Push the SHUTTER/MENU dial so that the adjustment value blinks then rotate it to adjust to the specified level. (7) Push the SHUTTER/MENU dial to store the adjustment data in memory.
				◎ VIDEO OUT (75 Ω terminated) ⓣ SHUTTER/MENU dial ☆ DSP DATA <R>: ± 2 of DSP DATA <G>	(8) Rotate the SHUTTER/MENU dial to select MENU 3/6: IN GAIN <R>. (9) Push the SHUTTER/MENU dial so that the adjustment value blinks then rotate it to adjust to the specified level. (10) Push the SHUTTER/MENU dial to store the adjustment data in memory.
				◎ VIDEO OUT (75 Ω terminated) ⓣ SHUTTER/MENU dial ☆ Minimize the carrier leak.	(11) Minimize the white carrier leak signal of the video signal by repeating steps (5) to (10). (Carrier leak: less than 30 mVp-p)

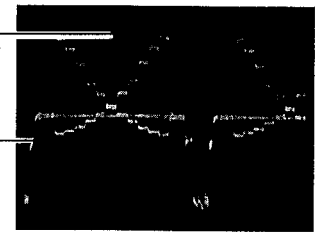

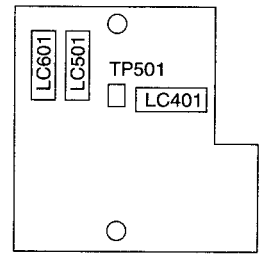

CAM board

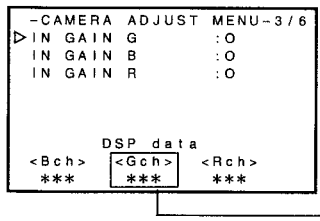

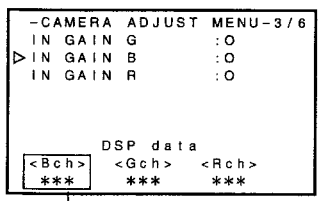

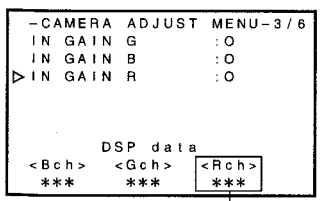

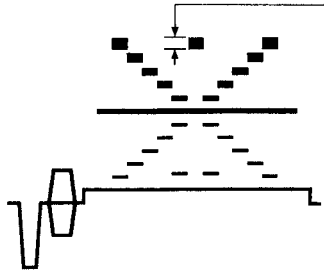

No.	Item	Measuring instruments & Input signals	Mode	Measuring point (◎) Adjustment parts (ⓣ) Adjustment level (☆)	Adjustment procedure

3.5.5 Flare Correction Adjustments

1	Flare adjustment	• Oscilloscope (H-rate, 10:1) or WFM • Gray scale chart (precisely scanned size)	Adjustment menu 5/6	◎ VIDEO OUT (75 Ω terminated) ⓣ Lens iris ☆ NTSC 0.714 Vp-p; PAL 0.7 Vp-p ⇩ Opened by 1 f-stop (200%)	(1) Rotate the SHUTTER/MENU dial to select MENU 5/6: M. FLARE. (2) Shoot the gray scale chart and adjust the lens iris so that the white peak level is 0.714 Vp-p. (3) Open the iris by 1 stop further.
		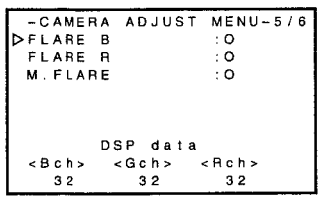		◎ VIDEO OUT (75 Ω terminated) ⓣ SHUTTER/MENU dial ☆ Minimize window black carrier leakage.	(4) Rotate the SHUTTER/MENU dial to select MENU 5/6: FLARE <B>. (5) Push the SHUTTER/MENU dial so that the adjustment value blinks then rotate it to adjust to the specified level. (6) Push the SHUTTER/MENU dial to store the adjustment data in memory.
		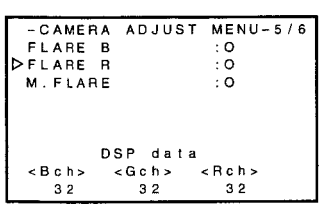		◎ VIDEO OUT (75 Ω terminated) ⓣ SHUTTER/MENU dial ☆ Minimize window black carrier leakage.	(7) Rotate the SHUTTER/MENU dial to select MENU 5/6: FLARE <R>. (8) Push the SHUTTER/MENU dial so that the adjustment value blinks then rotate it to adjust to the specified level. (9) Push the SHUTTER/MENU dial to store the adjustment data in memory.
				◎ VIDEO OUT (75 Ω terminated) ⓣ SHUTTER/MENU dial ☆ Minimize window black carrier leakage.	(10) Minimize the black carrier leak signal of the gray scale window by repeating the steps (4) to (9).
		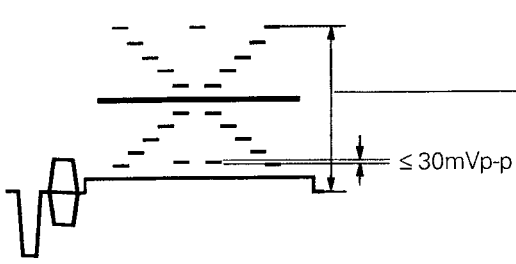		◎ VIDEO OUT (75 Ω terminated) ⓣ Lens iris ☆ 0.714 Vp-p (100 IRE) NTSC 0.714 Vp-p; PAL 0.7 Vp-p	(11) Adjust the lens iris to return the white peak of the gray scale to 0.714 Vp-p(NTSC) 0.7 Vp-p(PAL). (12) Ensure that the level of the black section of the window is no more than 30 mVp-p.

No.	Item	Measuring instruments & Input signals	Mode	Measuring point (◎) Adjustment parts (ⓣ) Adjustment level (☆)	Adjustment procedure
2	ABL adjustment	• Oscilloscope (H-rate, 10:1) or WFM • Gray scale chart (precise scanned size)	Adjustment menu 5/6	◎ VIDEO OUT (75 Ω terminated) ⓣ SHUTTER/MENU dial ☆ Gray scale chart window black level: NTSC: 110 +5/–0 mVp-p PAL: 55 +5/–0 mVp-p	(1) Rotate the SHUTTER/MENU dial to select MENU 5/6: M. FLARE. (2) Push the SHUTTER/MENU dial so that the adjustment value blinks then rotate it to adjust to the specified level. (3) Push the SHUTTER/MENU dial to store the adjustment data in memory.

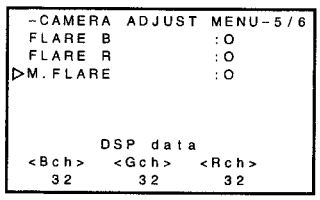

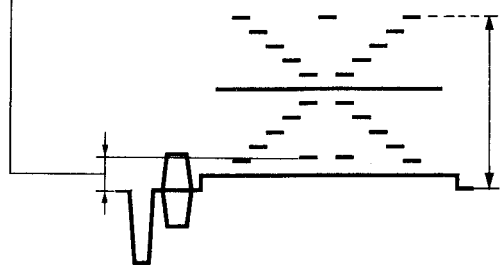

NTSC	0.714 Vp-p
PAL	0.7 Vp-p

3.5.6 Iris Level Adjustment

No.	Item	Measuring instruments & Input signals	Mode	Measuring point (◎) Adjustment parts (ⓣ) Adjustment level (☆)	Adjustment procedure
1	IRIS LEVEL adjustment	• Oscilloscope (H-rate, 10:1) or WFM • Monitor TV • Gray scale chart (precise scanned size)	Adjustment menu 6/6	◎ VIDEO OUT (75 Ω terminated) ⓣ SHUTTER/MENU dial ☆ NTSC: 0.714 ± 0.03 Vp-p PAL: 0.7 ± 0.03 Vp-p	(1) Rotate the SHUTTER/MENU dial to select MENU 6/6: IRIS LEVEL. (2) Push the SHUTTER/MENU dial so that the adjustment value blinks then rotate it to adjust to the specified level. (3) Push the SHUTTER/MENU dial to store the adjustment data in memory.

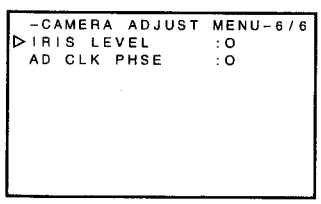

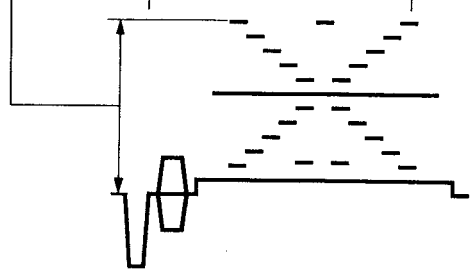

3.5.7 AD CLOCK PHASE Adjustment

No.	Item	Measuring instruments & Input signals	Mode	Measuring point (◎) Adjustment parts (ⓣ) Adjustment level (☆)	Adjustment procedure
1	AD CLOCK PHASE Adjustment	• Oscilloscope (H-rate, 10:1) or WFM • IN MEGA CYCLE chart (precise scanned size)	Adjustment menu 6/6	◎ VIDEO OUT (75 Ω terminated) ⓣ SHUTTER/MENU dial ☆ Maximize the modulation degree of 5 MHz on the IN MEGA CYCLE chart.	(1) Rotate the SHUTTER/MENU dial to select MENU 6/6: AD CLK PHASE. (2) Push the SHUTTER/MENU dial so that the adjustment value blinks then rotate it to adjust to the specified level. (3) Push the SHUTTER/MENU dial to store the adjustment data in memory.

3.5.8 DYNAMIC SHADING Adjustment

No.	Item	Measuring instruments & Input signals	Mode	Measuring point (◎) Adjustment parts (ⓣ) Adjustment level (☆)	Adjustment procedure
1	DYNAMIC SHADING Adjustment		Adjustment menu 4/6	☆ DY SH <G> : 0 DY SH <B> : 0 DY SH <R> : 0	(1) Rotate the SHUTTER/MENU dial to select MENU 4/6: DY SH Adjustment. (2) Make sure that these adjstment values are all "0".

3.6 VCR ADJUSTMENTS

3.6.1 Audio Circuitry Adjustments

Before adjustments, set the audio switches, menu and potentiometer as follows.

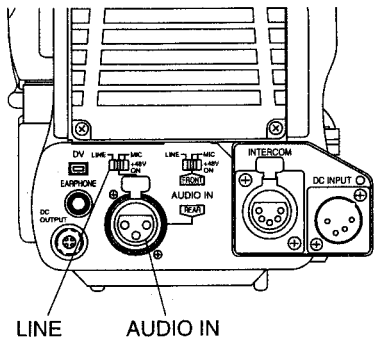

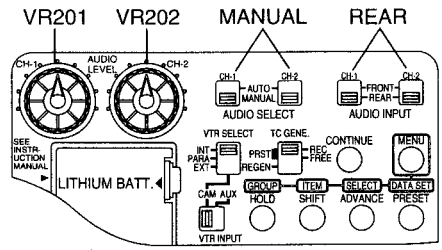

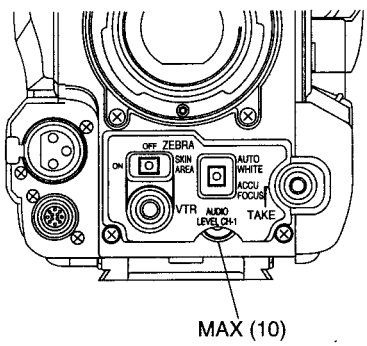

ITEM MENU
AUDIO

244 : LOW CUT	OFF
245 : SAMPLE RATE	48K
246 : FRONT VOLUME	ENABLE / DISABLE
257 : AUDIO REF. SIGNAL LEV	-20dB

* Refer to page 67 of the instruction book.

• Potentiometer and measuring points for adjustments

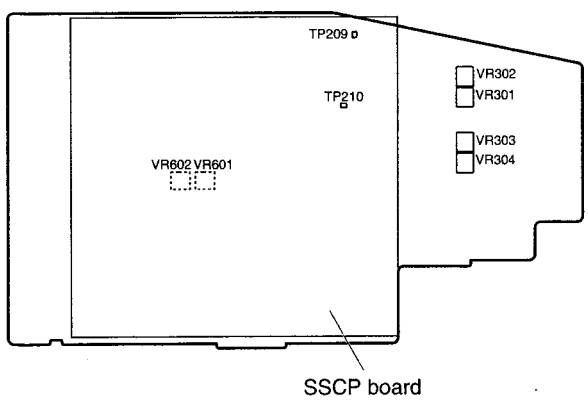

AUDIO/LCD board

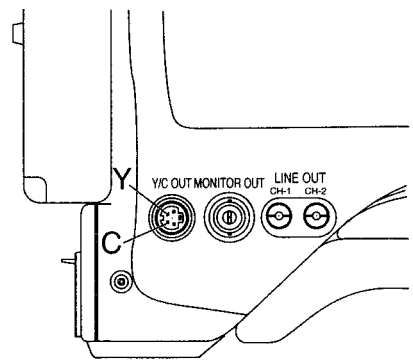

Y/C OUT terminal

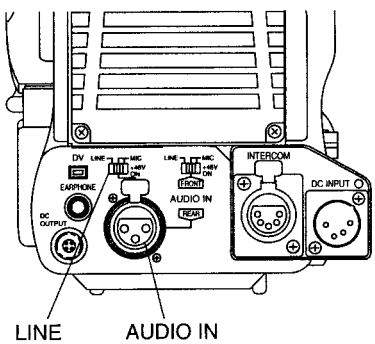

Rear panel

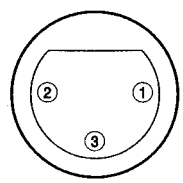

No.	SIGNAL
①	GND
②	HOT
③	COLD

AUDIO IN connector

No.	Item	Measuring instruments & Input signals	Mode	Measuring point (◎) Adjustment parts (ⓣ) Adjustment level (☆)	Adjustment procedure

3.6.2 Audio Circuitry Adjustments

Note : Before proceeding to section "3.5.2 Audio Circuitry Adjustments", complete "3.6.10 Audio Circuitry Adjustment of DV Unit".

1	Preparation				Before adjustments, set the audio switches, menu and potentiometer as follows: **[Switches]** AUDIO IN : LINE AUDIO INPUT : REAR AUDIO SELECT : MANU **[Menu]** LOW CUT : OFF SAMPLING RATE : 48KHz FRONT VOLUME ENABLE : DISABLE REF. LEVEL : –20 dB **[Potentiometer(Front panel)]** AUDIO LEVEL CH1 : MAX (10)
2	INPUT LEVEL adjustment	• 1kHz,+4dBs • Audio tester	EE	◎ TP209 (CH1) [AUDIO LCD] ⓣ VR201 (CH1) [AUDIO LCD] ◎ TP210 (CH2) [AUDIO LCD] ⓣ VR202 (CH2) [AUDIO LCD] ☆ –22 dBs	(1) Apply a +4 dBs signal to the AUDIO INPUT connector of REAR and adjust the adjustment points so that the levels at the measuring points are as specified.
3	OUTPUT LEVEL adjustment	• 1kHz,+4dBs • Audio tester	EE	◎ LINE OUT ⓣ VR302 (CH1) [AUDIO LCD] ⓣ VR303 (CH2) [AUDIO LCD] ☆ –6 dBs	(1) Perform this adjustment after completing 2 above. (2) Apply a +4 dBs signal to the AUDIO INPUT connector of REAR and adjust the adjustment points so that the levels at the measuring points are as specified.
4	Record/play level adjust-ment	• 1kHz,+4dBs •Audio tester	Self-recording/ playback	◎ LINE OUT ⓣ VR301 (CH1) [AUDIO LCD] ⓣ VR304 (CH2) [AUDIO LCD] ☆ –6 dBs	(1) Perform this adjustment after completing 2 and 3 above. (2) Apply a +4 dBs signal to the AUDIO INPUT connector of REAR and record the audio onto tape. (3) Play the tape recorded in (2) and adjust the adjustment points so that the levels at the measuring points are as specified.
5	Level meter adjustment	• 1kHz,+4dBs	EE	◎ LCD ⓣ VR601 (CH1) [AUDIO LCD] ⓣ VR602 (CH2) [AUDIO LCD] ☆ LCD's audio level meter display: "–20"	(1) Perform this adjustment after completing 2,3 and 4 above. (2) Apply a +4 dBs signal to the AUDIO INPUT connector of REAR and adjust the adjustment points so that the audio level meter of LCD indicates "–20" for both channels.

SECTION 4
CHARTS AND DIAGRAMS

■ SCHEMATIC DIAGRAM NOTES

- Schematic safety precaution
  ⚠ Parts are safety related parts.
  When replacing them, be sure to use the specified parts.
- Voltage and waveform measurements
  Voltage: Measured with digital voltmeter in DC range; iris closed in REC mode.
  Value in ( ) is indicated only in the case PB voltage is different from that in REC mode.
  Waveform: Gray scale illuminated at more than 4000 lux at 3200K lighting.
- Unit of value
  Unless otherwise specified
  1) Resistance is in Ω (1/6 W)
  2) Capacitance is in μF
  3) Inductance is in μH
- Expression of wiring

As the following circuit diagram is divided to print on some sheets, such an indication as the following is found in the case the wiring extends over two or more divided sections.

1) Circuit diagram divided into two or more sections:

Board	Board Name	Number of divided sections
16	SE	1/2 – 2/2
19	DPR	1/4 – 4/4
31	SS/CP	1/2 – 2/2
32	AUDIO/LCD	1/2 – 2/2
10	DV MAIN	1/7 – 7/7

2) Indication of wiring which extends to another section:
(Example)

A)

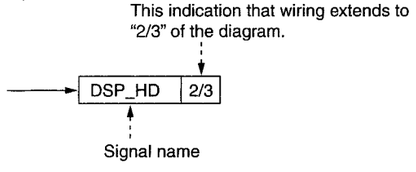

In the above case, the end of the wiring is connected to the "DSP_HD" on the 2nd section of the diagram.

B)

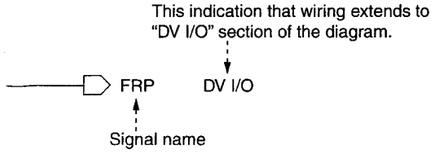

In the above case, the end of the wiring is connected to the "FRP" on the "DV I/O" section of the diagram.

- Wiring of connector

(Example)

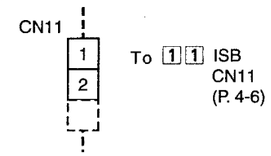

In the above example, CN11 is connected with CN11 on 11 ISB board.

- Signal flow on the diagram
  The following allow marks indicate the specified signal paths respectively.

  ➡ : Recording or EE signal path
  ⇨ : Playback signal ptah
  ➡ : Recording and Playback signal path

- Others

In regard of a board assembly whose circuit is composed of multilayered board patterns such 4- or 6-layered patterns, board patterns of the power supply lines and grounding lines are omitted in this section.

Note: For detail of each electrical part, refer to Section 6 "ELECTRICAL PARTS LIST" by it symbol number.

■ REPLACING SURFACE MOUNT "CHIP" COMPONENTS

- Some resistors, shorting jumpers (0 resistance), ceramic capacitors, transistors, and diodes are chip parts. These chip parts cannot be reused after they are once removed.
- Chip resistors used in some circuits are of high precision type having little error in resistance.
  To demonstrate the full capacity of this set, place an order for proper parts referring to the diagrams and parts lists in the section 5.
- Soldering cautions:
  1) Do not apply heat for more than 3 seconds.
  2) Avoid using a rubbing stroke when soldering.
  3) Discard removed chips; do not reuse them.
  4) Supplementary cementing is not required.
  5) Use care not to scratch or otherwise damage the chips.

■ CHIP PARTS PIN ARRANGEMENT

[1] Digital transistors

DTC 1 □□□□
① ②③

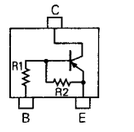

(Top view)

DTA 1 □□□□
DTB 1 □□□□
① ②③

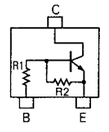

(Top view)

① Two digits show resistance of R1 in abbreviation.
  43 : 4.7 kΩ
  14 : 10 kΩ
  24 : 22 kΩ
  44 : 47 kΩ

② Roman letter show the resistive ratio between R1 and R2 in abbreviation.
  E : R2/R1 = 1/1
  Y : R2/R1 = 5/1
  W : R2/R1 = 2/1
  X : R2/R1 = 1/2
  T : R2 is opened.

③ Symbol the shape of resistor in abbreviation.

[2] Chip transistors and chip F.E.T.s

2SA □□□□
2SB □□□□

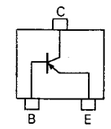

(Top view)

2SC □□□□
2SD □□□□

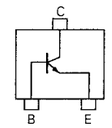

(Top view)

2SK □□□□

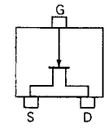

(Top view)

2SJ □□□□

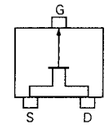

(Top view)

[3] Chip diodes

MA143A/MA742

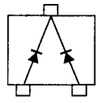

(Top view)

MA142WA

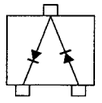

(Top view)

MA142A

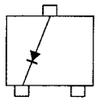

(Top view)

4-1

4.1 INDEX TO PAGES OF MAIN BOARDS AND CIRCUIT BOARD LOCATION

4.1.1 Circuit board location

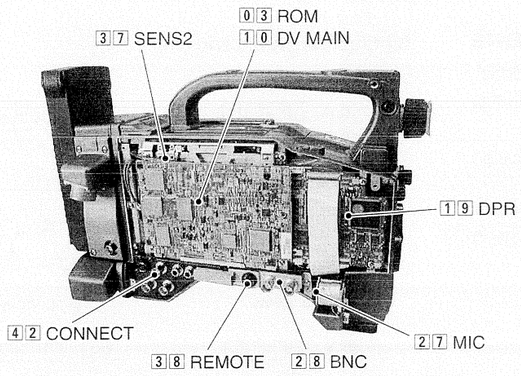

Left-hand side

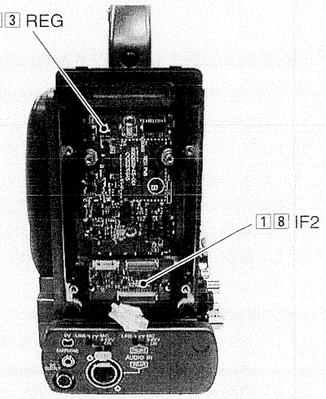

Rear

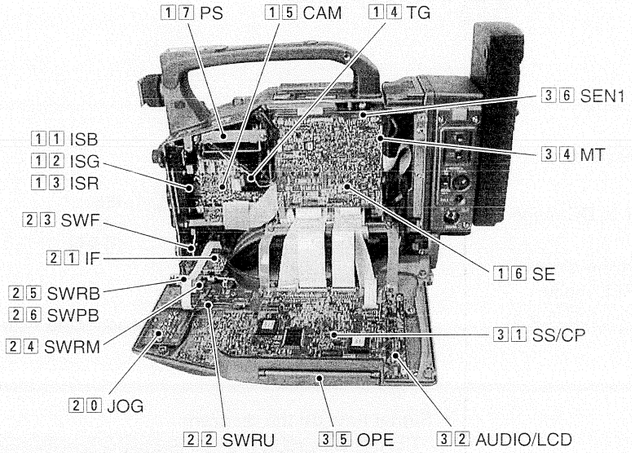

Right-hand side

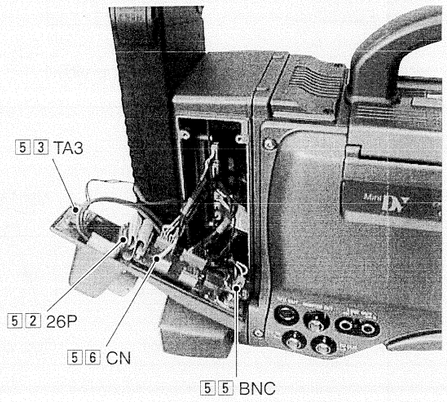

AD frame left-hand side

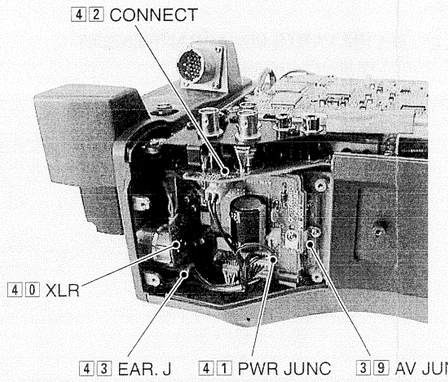

Bottom

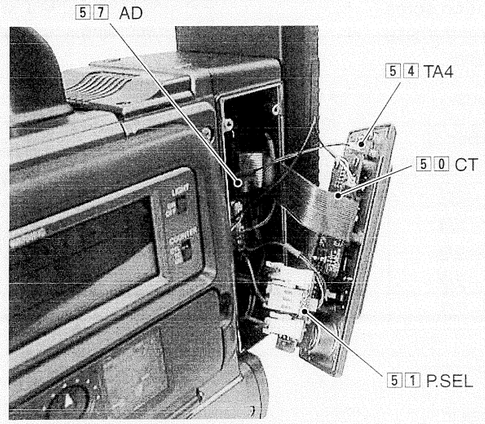

AD frame right-hand side

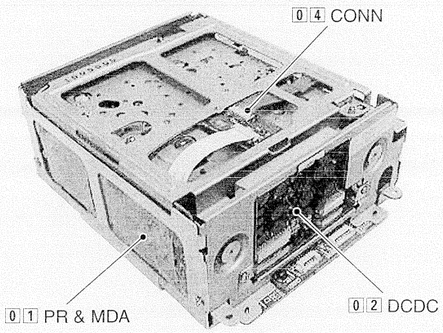

DVC unit

Board No.	Board Name	Page of diagram		
		Block diagram	Schematic diagram	Circuit board
–	OVERALL	–	4-3	–
–	OVERALL (DVC UNIT)	–	4-42	–
01	PR & MDA	4-66,67	4-52,53	4-54
02	DCDC	–	4-56	4-57
03	ROM	–	4-42	4-42
04	CONN.	–	4-55	4-57
10	DV MAIN	4-66,67	4-43 to 49	4-50, 51
11	ISB	4-33	4-4	4-5
12	ISG			
13	ISR			
14	TG	4-33	4-6	4-7
15	CAM	4-44	4-8	4-9
16	SE	4-46	4-16, 17	4-18
17	PS	–	4-31	4-33
18	IF2	–	4-32	4-33
19	DPR	4-45	4-10 to 13	4-14,15
20	JOG	–	4-24	4-26
21	IF	4-61	4-32	4-33
22	SWRU	4-61	4-24	4-26
23	SWF	4-61	4-25	4-26
24	SWRM	–	4-25	4-26
25	SWRB	–	4-25	4-26
26	SWPW	–	4-25	4-26
27	MIC	–	4-25	4-26

Board No.	Board Name	Page of diagram		
		Block diagram	Schematic diagram	Circuit board
28	BNC	–	4-25	4-26
29	FL	–	–	4-26
31	SS/CP	4-47	4-19, 20	4-21
32	AUDIO/LCD	4-48	4-25, 26	4-27 to 30
33	REG	4-64	4-34	4-35
34	MT	–	4-22	4-23, 24
35	OPE	–	4-37	4-39
36	SEN1	–	4-38	4-39
37	SENS2	–	4-38	4-39
38	REMOTE	–	4-38	4-39
39	AU JUNK	–	4-36	4-39
40	XLR	–	4-38	4-39
41	PWR JUNC	–	4-37	4-39
42	CONNECT	–	4-38	4-39
43	EAR.J	–	4-38	4-39
50	CT	–	4-40	4-41
51	P.SEL	–	4-40	4-41
52	26P	–	4-40	4-41
53	TA3	–	4-40	4-41
54	TA4	–	4-40	4-41
55	BNC	–	4-40	4-41
56	CN	–	4-40	4-41
57	AD	–	4-40	4-41

Note: Only thesection marked thus ▒ are described in this service manual.
For those section that are not described, please refer to the service manual of GY-DV500U/E No. 60125.

4-2

4.2 OVERALL WIRING DIAGRAM

EERRITE CORE	
SYMBOL	P.No
A	QQR1078-001
B	QQR0895-011
C	QQR0895-008
D	QQR0594-001
E	QQR0490-001

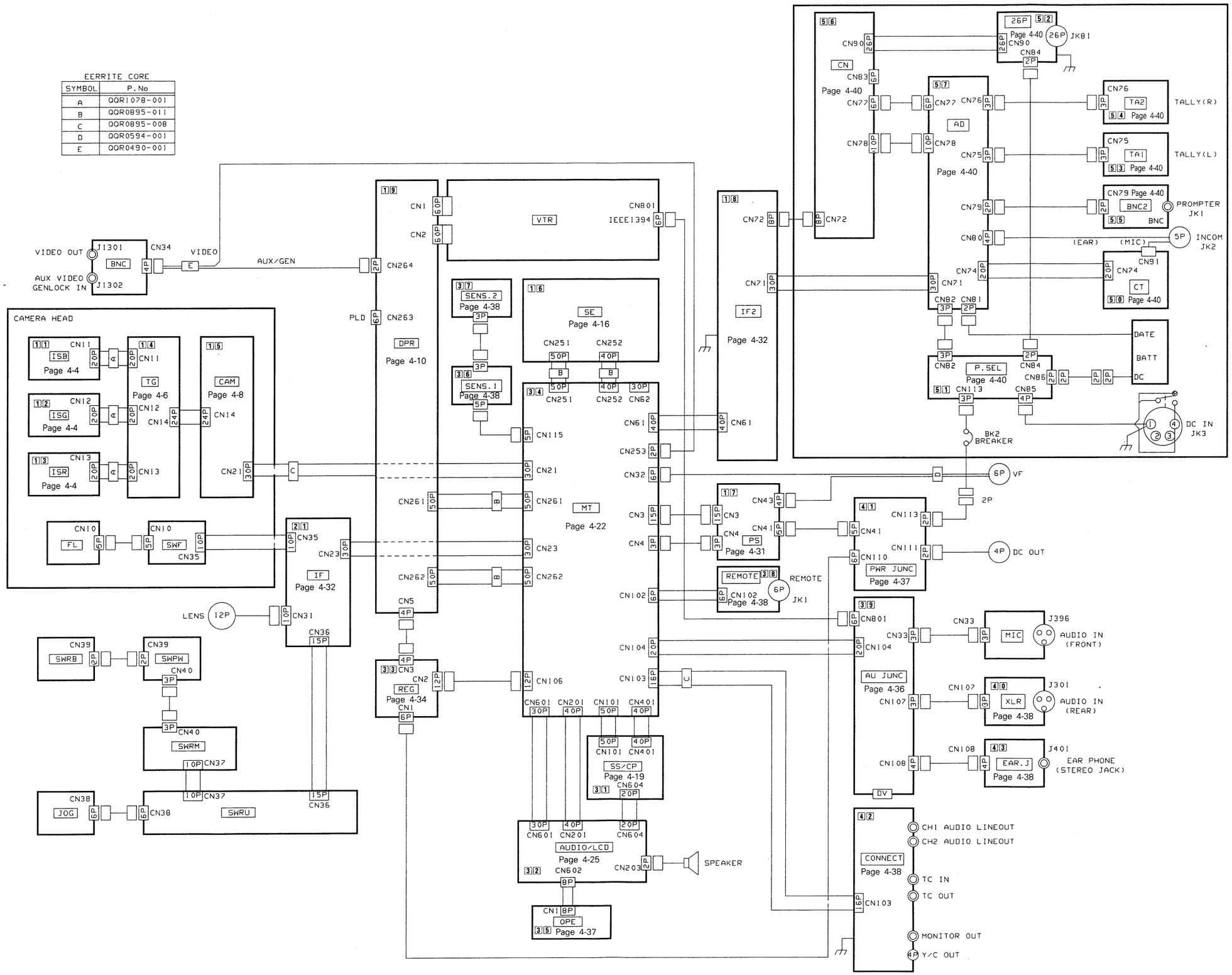

SC92683

4-3

4.3 ISB/ISG/ISR SCHEMATIC DIAGRAM 11/12/13

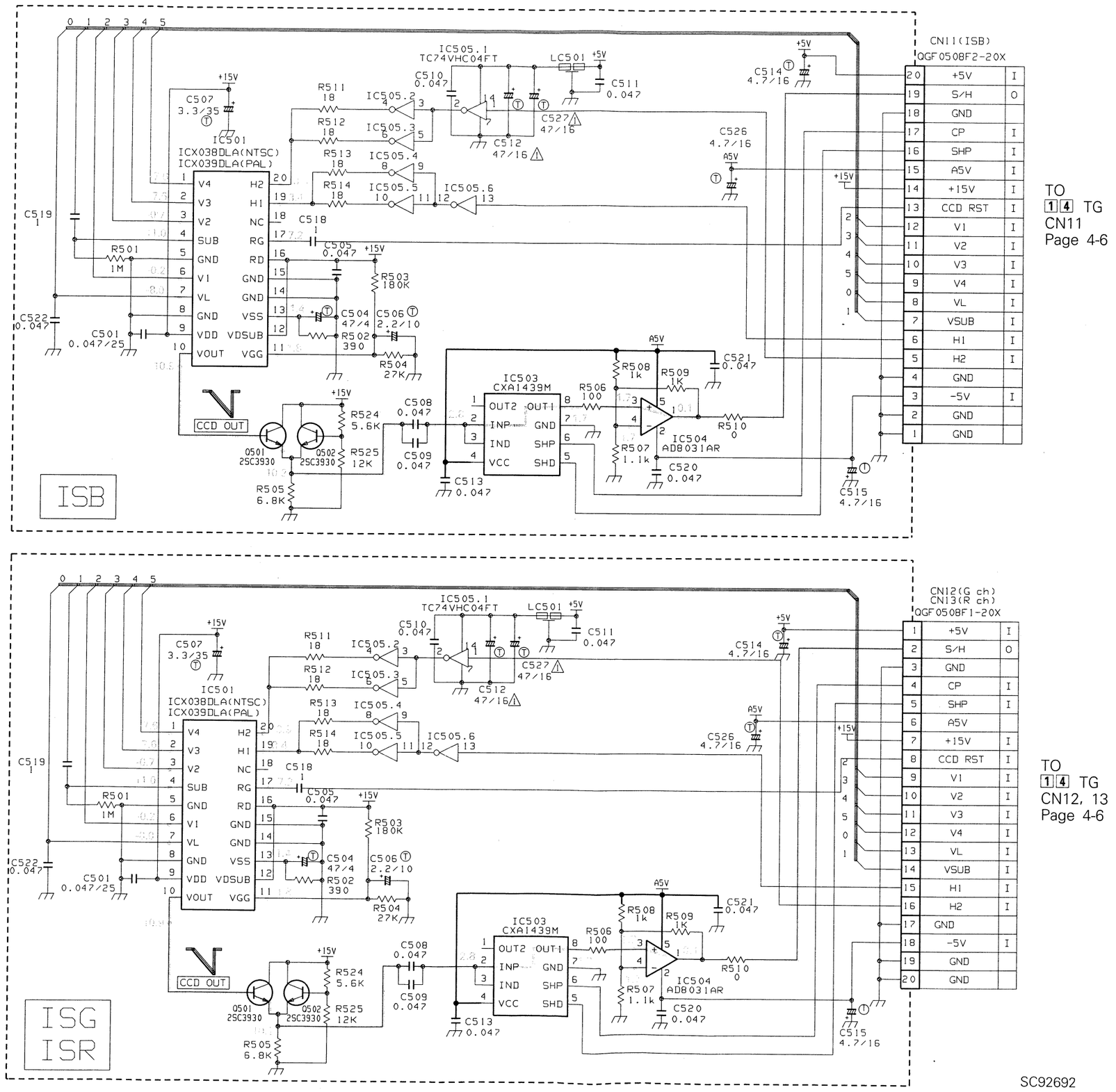

TO 14 TG CN11 Page 4-6

TO 14 TG CN12, 13 Page 4-6

SC92692

4.4 ISB/ISG/ISR CIRCUIT BOARD

• ISB

– SIDE A –

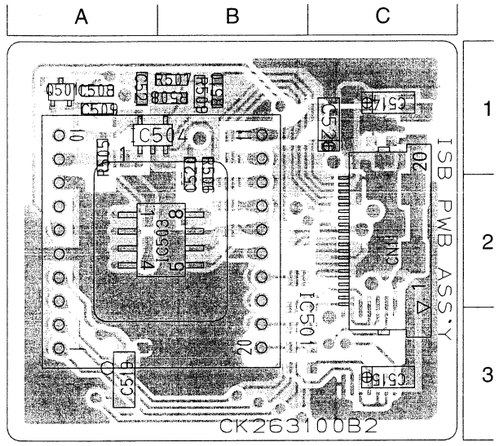

– SIDE B –

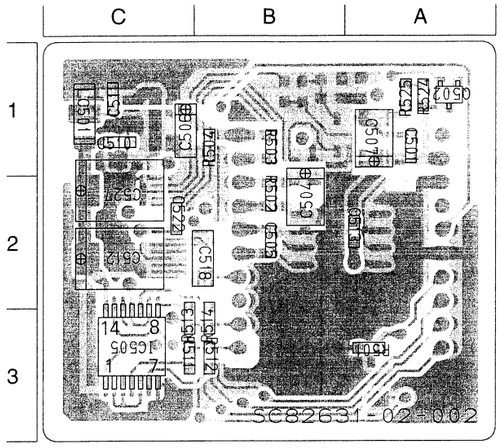

● **ADDRESS TABLE OF BOARD PARTS**
Each address may have an address error by one interval.

Side A-1C (Y axis / X axis)

IC501	A-2A	R507	A-1B	C506	B-1C	C522	B-2C
IC503	A-2A	R508	A-1B	C507	B-1A	C526	A-1C
IC504	A-1A	R509	A-1B	C508	A-1A	C527	B-2C
IC505	B-3C	R510	A-1B	C509	A-1A		
		R511	B-3C	C510	B-1C	LC501	B-1C
Q501	A-1A	R512	B-3B	C511	B-1C		
Q502	B-1A	R513	B-3C	C512	B-2C	CN11	A-2C
		R514	B-3B	C513	B-2A		
R501	B-3A	R524	B-1A	C514	A-1C		
R502	B-2B	R525	B-1A	C515	A-3C		
R503	B-1B			C518	B-2B		
R504	B-1B	C501	B-1A	C519	A-3A		
R505	A-1A	C504	B-2B	C520	A-1B		
R506	A-1B	C505	B-2B	C521	A-1A		

• ISG

– SIDE A –

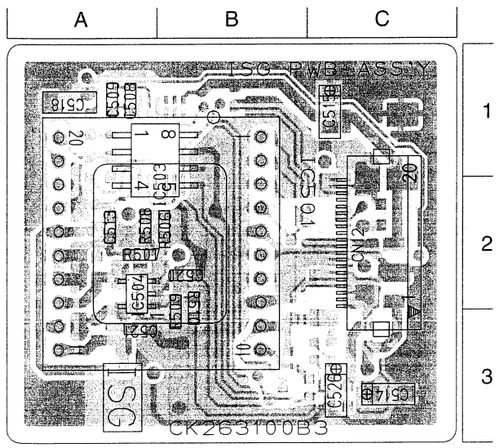

– SIDE B –

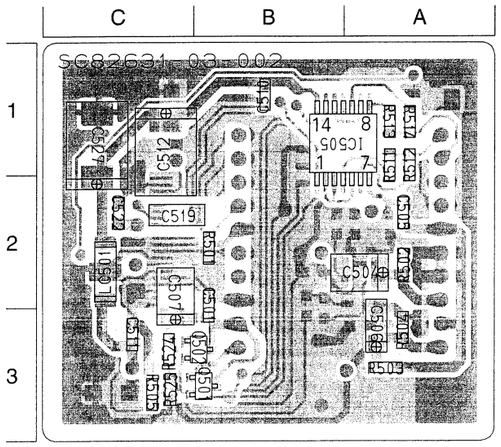

● **ADDRESS TABLE OF BOARD PARTS**
Each address may have an address error by one interval.

Side A-1C (Y axis / X axis)

IC501	A-2A	R507	A-2A	C506	B-3A	C522	B-2C
IC503	A-1A	R508	A-2A	C507	B-2C	C526	A-3C
IC504	A-2A	R509	A-3B	C508	A-1A	C527	B-1C
IC505	B-1A	R510	A-2B	C509	A-1A		
		R511	B-1A	C510	B-1B	CN12	A-2C
Q501	B-3B	R512	B-1A	C511	B-3C		
Q502	B-3B	R513	B-1A	C512	B-1C	LC501	B-2C
		R514	B-1A	C513	A-2A		
R501	B-2B	R524	B-3C	C514	A-3C		
R502	B-2A	R525	B-3C	C515	A-1C		
R503	B-3A			C518	A-1A		
R504	B-3A	C501	B-2B	C519	B-2C		
R505	B-3C	C504	B-2A	C520	A-2B		
R506	A-2A	C505	B-2A	C521	A-3A		

• ISR

– SIDE A –

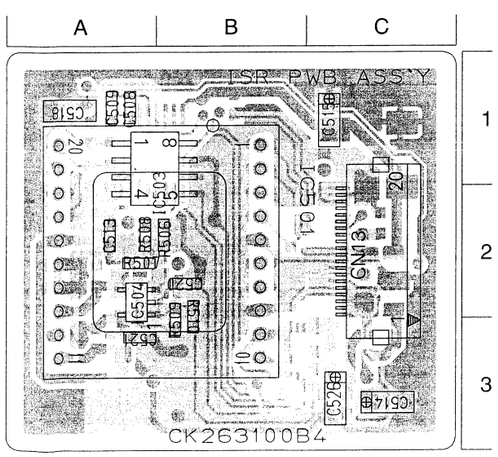

– SIDE B –

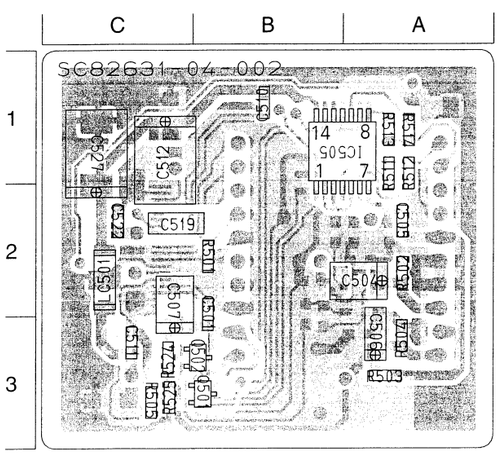

● **ADDRESS TABLE OF BOARD PARTS**
Each address may have an address error by one interval.

Side A-1C (Y axis / X axis)

IC501	A-2A	R507	A-2A	C506	B-3A	C522	B-2C
IC503	A-1A	R508	A-2A	C507	B-2C	C526	A-3C
IC504	A-2A	R509	A-3B	C508	A-1A	C527	B-1C
IC505	B-1A	R510	A-2B	C509	A-1A		
		R511	B-1A	C510	B-1B	CN12	A-2C
Q501	B-3B	R512	B-1A	C511	B-3C		
Q502	B-3B	R513	B-1A	C512	B-1C	LC501	B-2C
		R514	B-1A	C513	A-2A		
R501	B-2B	R524	B-3C	C514	A-3C		
R502	B-2A	R525	B-3C	C515	A-1C		
R503	B-3A			C518	A-1A		
R504	B-3A	C501	B-2B	C519	B-2C		
R505	B-3C	C504	B-2A	C520	A-2B		
R506	A-2A	C505	B-2A	C521	A-3A		

4-5

4.5 TG SCHEMATIC DIAGRAM 14

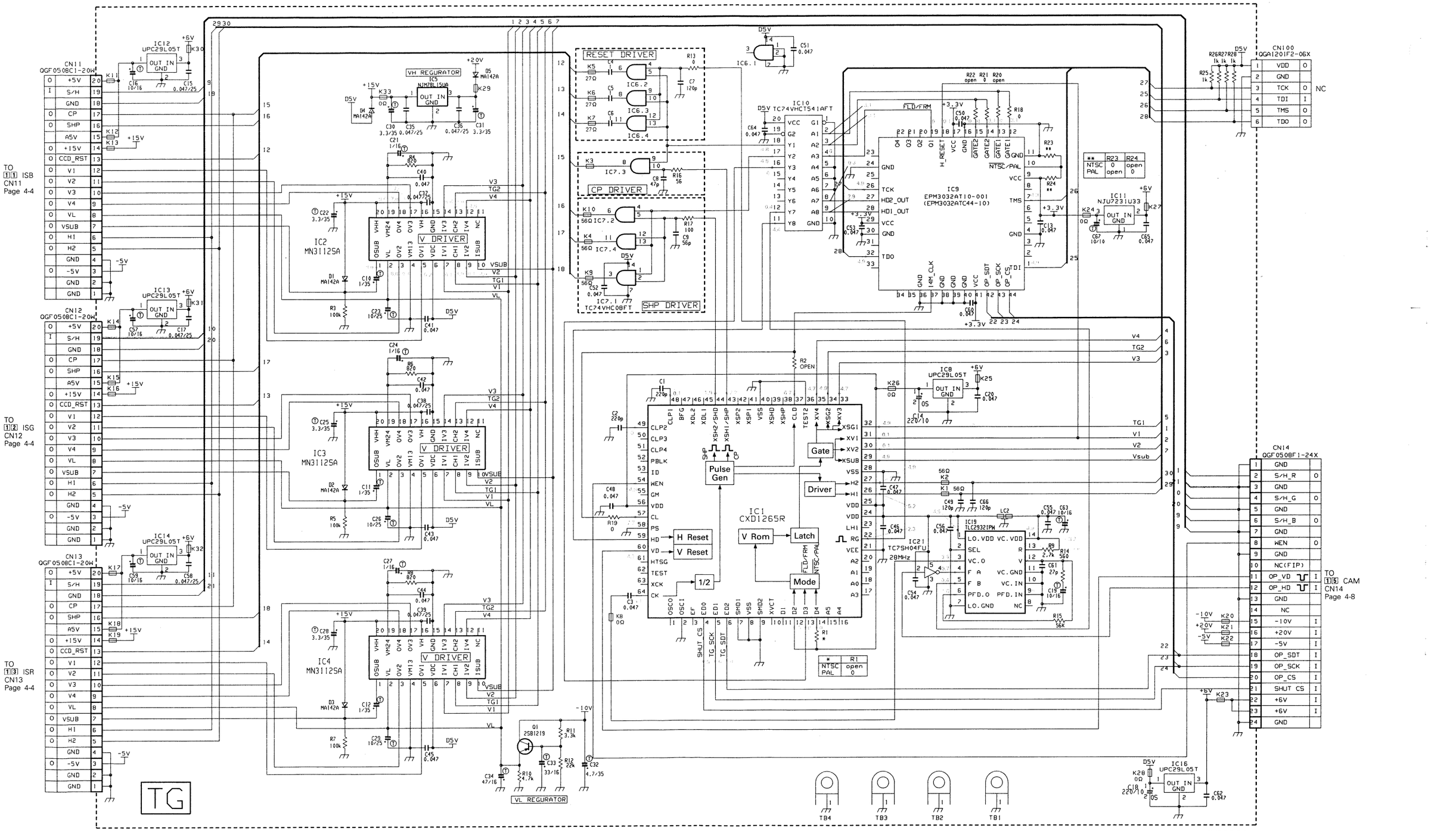

4.6 TG CIRCUIT BOARD

— SIDE A —

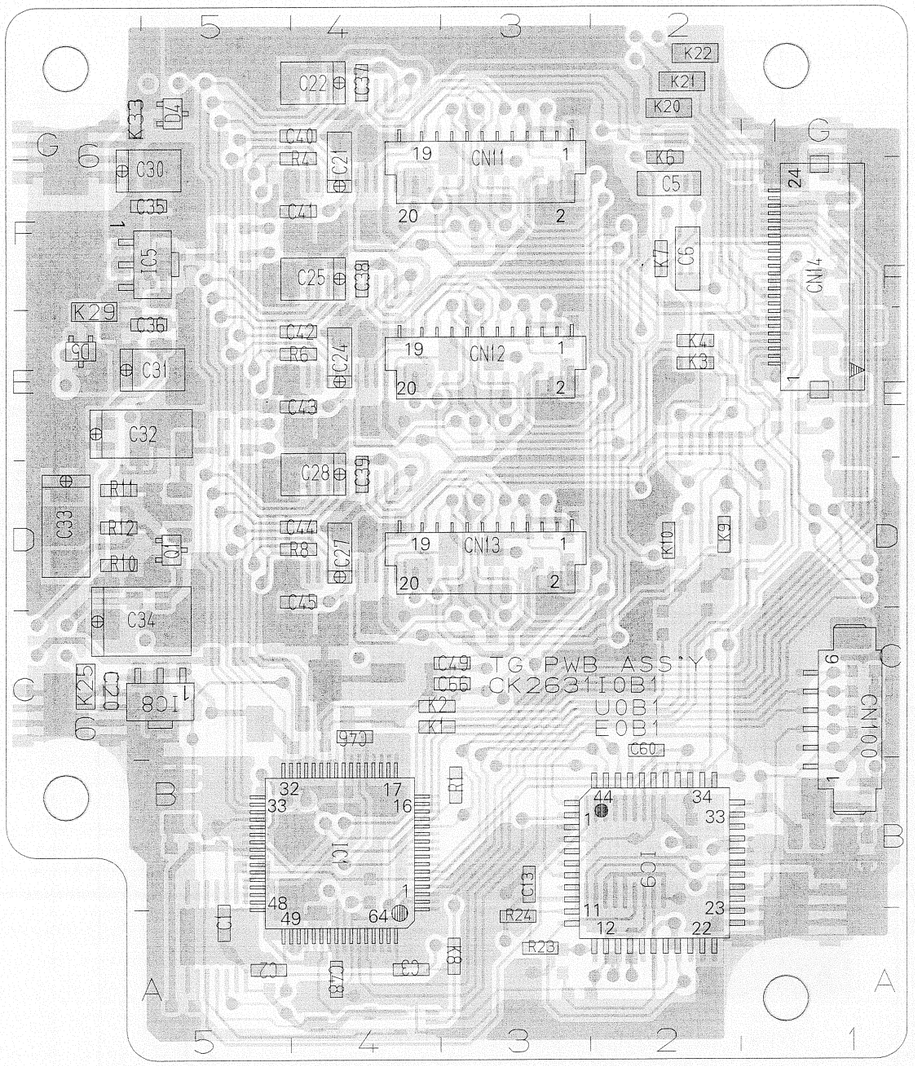

— SIDE B —

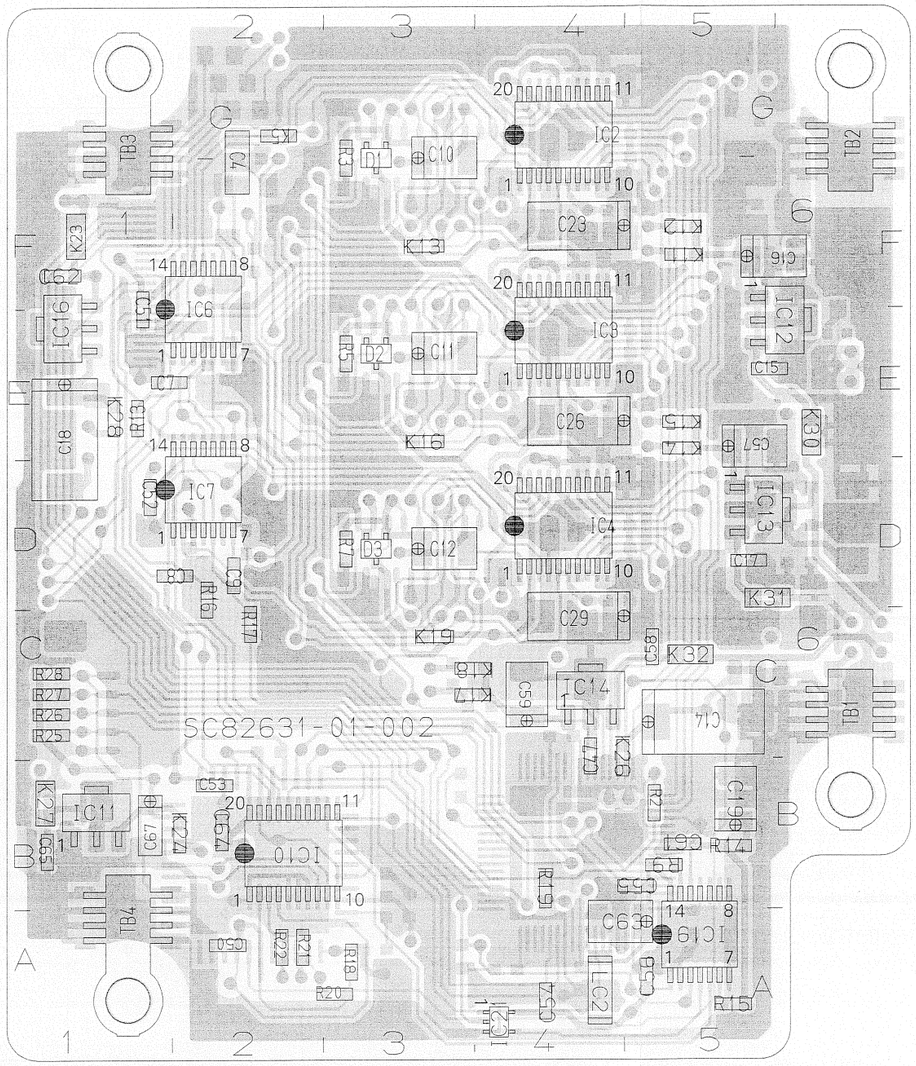

● **ADDRESS TABLE OF BOARD PARTS**

Each address may have an address error by one interval.

Side — A-1C — Y axis / X axis

IC1	A-4B	IC21	B-4A	R7	B-3D	R23	A-3A	C10	B-3G	C26	B-4E	C42	A-5E	C58	B-5C	K6	A-2G	K22	A-2G	TB4	B-1A
IC2	B-4G			R8	A-5D	R24	A-3A	C11	B-3E	C27	A-4D	C43	A-5E	C59	B-4C	K7	A-2F	K23	B-1F		
IC3	B-4E	Q1	A-5D	R9	B-5B	R25	B-1C	C12	B-3D	C28	A-5D	C44	A-5D	C60	A-2C	K8	A-4A	K24	B-2B	CN11	A-3G
IC4	B-4D			R10	A-6D	R26	B-1C	C13	A-3B	C29	B-4C	C45	A-5D	C61	B-5B	K9	A-2D	K25	A-6C	CN12	A-3E
IC5	A-6F	D1	B-3G	R11	A-6D	R27	B-1C	C14	B-5C	C30	A-6F	C46	A-4C	C62	B-1F	K10	A-2D	K26	B-5C	CN13	A-3D
IC6	B-2F	D2	B-3E	R12	A-6D	R28	B-1C	C15	B-6E	C31	A-6E	C47	B-4C	C63	B-5A	K11	B-5F	K27	B-1B	CN14	A-1F
IC7	B-2D	D3	B-3D	R13	B-1E			C16	B-6F	C32	A-6E	C48	A-4A	C64	B-2B	K12	B-5F	K28	B-1E	CN100	A-1C
IC8	A-6C	D4	A-5G	R14	B-5B	C1	A-5A	C17	B-6D	C33	A-6D	C49	A-4C	C65	B-1B	K13	B-3F	K29	A-6E		
IC9	A-2B	D5	A-6E	R15	B-5A	C2	A-5A	C18	B-1E	C34	A-6C	C50	B-2A	C66	A-4C	K14	B-5E	K30	B-6E	LC2	B-5A
IC10	B-2B			R16	B-2D	C3	A-4A	C19	B-5B	C35	A-6F	C51	B-1F	C67	B-2B	K15	B-5E	K31	B-6D		
IC11	B-1B	R1	A-4B	R17	B-2C	C4	B-2F	C20	A-6C	C36	A-6E	C52	B-2D			K16	B-3E	K32	B-5C		
IC12	B-6E	R2	B-5B	R18	B-3A	C5	A-2F	C21	A-4F	C37	A-4G	C53	B-2B	K1	A-4C	K17	B-4C	K33	A-6G		
IC13	B-6D	R3	B-3G	R19	B-4B	C6	A-2F	C22	A-5G	C38	A-4F	C54	B-4A	K2	A-4C	K18	B-4C				
IC14	B-4C	R4	A-5G	R20	B-3A	C7	B-2E	C23	B-4F	C39	A-4D	C55	B-5B	K3	A-2E	K19	B-3C	TB1	B-6B		
IC16	B-1E	R5	B-3E	R21	B-3A	C8	B-2D	C24	A-4E	C40	A-5G	C56	B-5A	K4	A-2E	K20	A-2G	TB2	B-6G		
IC19	B-5A	R6	A-5E	R22	B-2A	C9	B-2D	C25	A-5F	C41	A-5F	C57	B-6E	K5	B-2G	K21	A-2G	TB3	B-1G		

4-7

4.7 CAM SCHEMATIC DIAGRAM 1 5

H-rate
1.15Vp-p

H-rate
1.3Vp-p

SC92684

4.8 CAM CIRCUIT BOARD

— SIDE A —

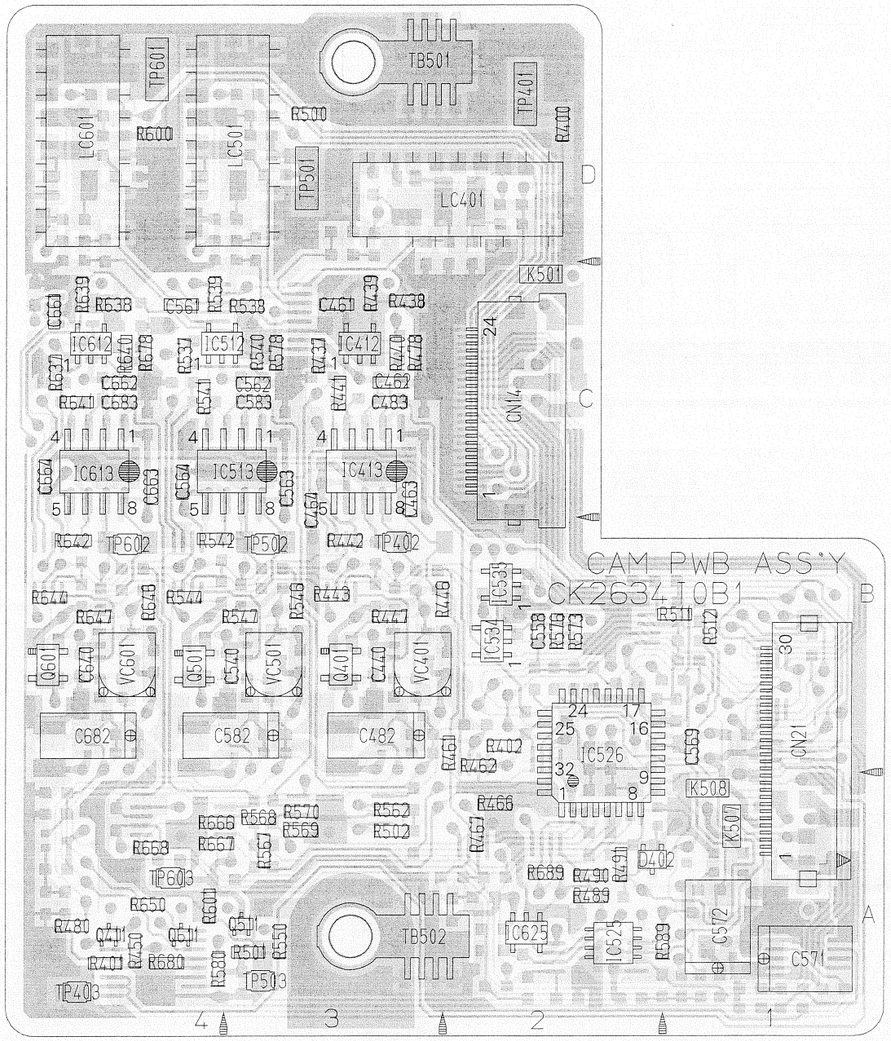

— SIDE B —

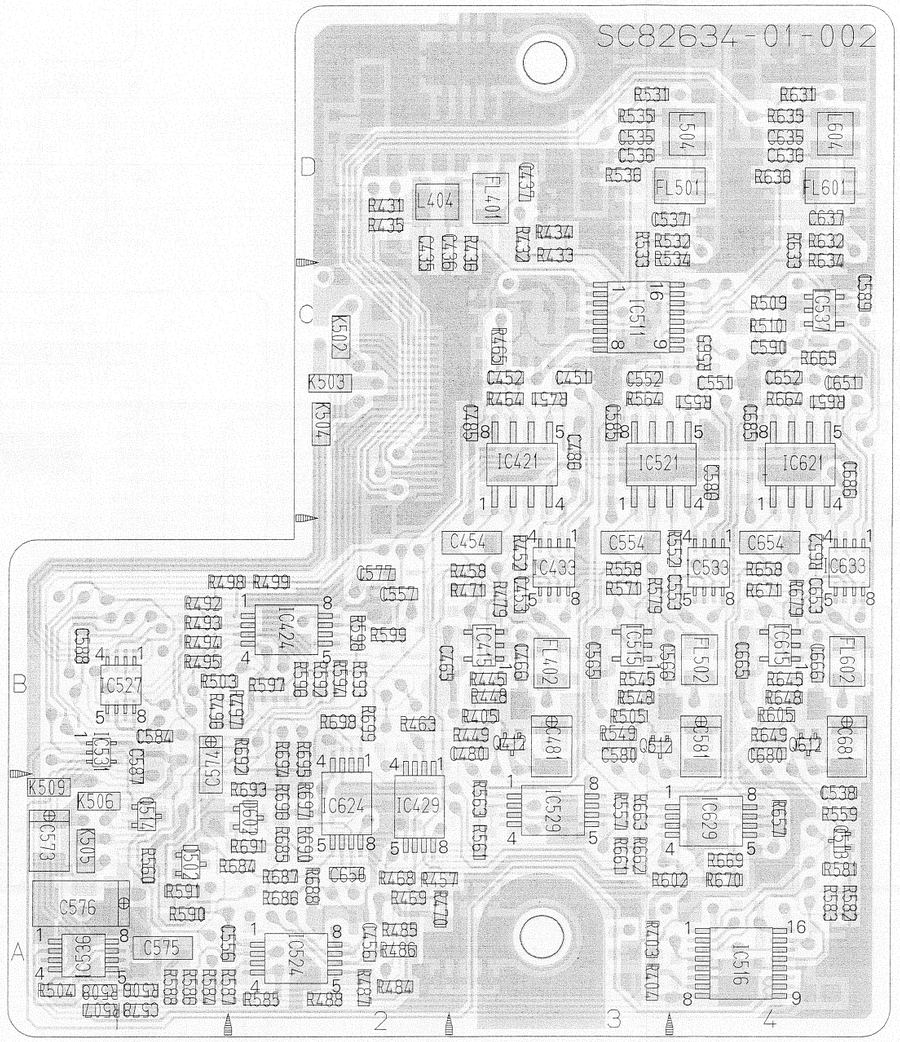

● **ADDRESS TABLE OF BOARD PARTS**

Each address may have an address error by one interval.

Side A-1C (Y axis / X axis)

IC412	A-3C	IC613	A-4C	R401	A-4A	R452	B-3B	R492	B-1B	R535	B-3D	R565	B-4C	R596	B-2B	R649	B-4B	R689	A-2A	C465	B-3B	C566	B-4B	C651	B-4C	TP401	A-2D	FL602	B-4B
IC413	A-3C	IC615	B-4B	R402	A-2B	R457	B-3A	R493	B-1B	R536	B-3D	R567	A-3A	R597	B-2B	R650	A-4A	R690	B-2A	C466	B-3B	C569	A-1B	C652	B-4C	TP402	A-3B		
IC415	B-3B	IC621	B-4C	R403	B-3A	R458	B-3B	R494	B-1B	R537	A-4C	R568	A-3A	R598	B-2B	R651	B-4C	R691	B-2A	C480	B-3B	C571	A-1A	C653	B-4B	TP403	A-4A	TB501	A-3D
IC421	B-3C	IC624	B-2A	R404	B-3A	R461	A-3B	R495	B-1B	R538	A-3C	R569	A-3A	R599	B-2B	R652	B-4B	R692	B-2B	C481	B-3B	C572	A-1A	C654	B-4B	TP501	A-3D	TB502	A-3A
IC424	B-2B	IC625	A-2A	R405	B-3B	R462	A-2B	R496	B-1B	R539	A-4C	R570	A-3A	R600	A-4D	R657	B-4A	R693	B-2A	C482	A-3B	C573	B-1A	C656	B-2A	TP502	A-3B		
IC429	B-2A	IC629	B-4A	R431	B-2D	R463	B-2B	R497	B-2B	R540	A-3C	R571	B-3B	R601	A-4A	R658	B-4B	R694	B-2B	C483	A-3C	C574	B-1B	C661	A-4C	TP503	A-3A	CN14	A-2C
IC433	B-3B	IC633	B-4B	R432	B-3D	R464	B-3C	R498	B-2B	R541	A-4C	R573	A-2B	R602	B-4A	R661	B-3A	R695	B-2B	C485	B-3C	C575	B-1A	C662	A-4C	TP601	A-4D	CN21	A-1B
IC511	B-3C			R433	B-3D	R465	B-3C	R499	B-2B	R542	A-4B	R576	A-2B	R605	B-4B	R662	B-3A	R696	B-2A	C486	B-3C	C576	B-1A	C663	A-4C	TP602	A-4B		
IC512	A-4C	Q401	A-3B	R434	B-3D	R466	A-2A	R500	A-3D	R544	A-4B	R578	A-3C	R631	B-4D	R663	B-3A	R697	B-2A	C535	B-3D	C577	B-2B	C664	A-4C	TP603	A-4A	LC401	A-3D
IC513	A-3C	Q411	A-4A	R435	B-2D	R467	A-2A	R501	A-3A	R545	B-3B	R579	B-3B	R632	B-4D	R664	B-4C	R698	B-2B	C536	B-3D	C578	B-1A	C665	B-4B			LC501	A-3D
IC515	B-3B	Q412	B-3B	R436	B-3D	R468	B-2A	R502	A-3A	R546	A-3B	R580	A-4A	R633	B-4D	R665	B-4C	R699	B-2B	C537	B-4D	C580	B-3B	C666	B-4B	K501	A-2C	LC601	A-4D
IC516	B-4A	Q501	A-4B	R437	A-3C	R469	B-2A	R503	B-1B	R547	A-3B	R581	B-4A	R634	B-4C	R666	A-4A			C538	B-4A	C581	B-4B	C680	B-4B	K502	B-2C		
IC521	B-3C	Q511	A-3A	R438	A-3C	R470	B-3A	R504	B-1A	R548	B-3B	R582	B-4A	R635	B-4D	R667	A-4A	C435	B-2D	C540	A-3B	C582	A-3B	C681	B-4B	K503	B-2C		
IC524	B-2A	Q512	B-3B	R439	A-3C	R471	B-3B	R505	B-3B	R549	B-3B	R583	B-4A	R636	B-4D	R668	A-4A	C436	B-3D	C551	B-4C	C583	A-3C	C682	A-4B	K504	B-2C		
IC525	A-2A	Q513	B-4A	R440	A-3C	R478	A-3C	R506	B-1A	R550	A-3A	R584	B-1A	R637	A-4C	R669	B-4A	C437	B-3D	C552	B-3C	C584	B-1B	C683	A-4C	K505	B-1A		
IC526	A-2B	Q514	B-1A	R441	A-3C	R479	B-3B	R507	B-1A	R551	B-4C	R585	B-2A	R638	A-4C	R670	B-4A	C440	A-3B	C553	B-4B	C585	B-3C	C685	B-4C	K506	B-1A		
IC527	B-1B	Q601	A-4B	R442	A-3B	R480	A-4A	R508	B-1A	R552	B-4B	R586	B-1A	R639	A-4C	R671	B-4B	C451	B-3C	C554	B-3B	C586	B-4C	C686	B-4C	K507	A-1A		
IC529	B-3A	Q611	A-4A	R443	A-3B	R484	B-2A	R509	B-4C	R557	B-3A	R587	B-2A	R640	A-4C	R678	A-4C	C452	B-3C	C556	B-2A	C587	B-1B			K508	A-1A		
IC531	B-1B	Q612	B-4B	R445	B-3B	R485	B-2A	R510	B-4C	R558	B-3B	R588	B-1A	R641	A-4C	R679	B-4B	C453	B-3B	C557	B-2B	C588	B-1B	VC401	A-3B	K509	B-1A		
IC533	B-4B			R446	A-3B	R486	B-2A	R511	A-1B	R559	B-4A	R589	A-2A	R642	A-4B	R680	A-4A	C454	B-3B	C558	A-2B	C589	B-4C	VC501	A-3B				
IC534	A-2B	D402	A-2A	R447	A-3B	R487	B-2A	R512	A-1B	R560	B-1A	R590	B-1A	R644	A-4B	R684	B-2A	C456	B-2A	C561	A-4C	C590	B-4C	VC601	A-4B	FL401	B-3D		
IC535	A-2B	D502	B-1A	R448	B-3B	R488	B-2A	R531	B-3D	R561	B-3A	R591	B-1A	R645	B-4B	R685	B-2A	C461	A-3C	C562	A-3C	C635	B-4D			FL402	B-3B		
IC536	B-1A	D602	B-2A	R449	B-3B	R489	A-2A	R532	B-4D	R562	A-3A	R592	B-2B	R646	A-4B	R686	B-2A	C462	A-3C	C563	A-3C	C636	B-4D	L404	B-2D	FL501	B-4D		
IC537	B-4C			R450	A-4A	R490	A-2A	R533	B-3D	R563	B-3A	R593	B-2B	R647	A-4B	R687	B-2A	C463	A-3C	C564	A-4C	C637	B-4D	L504	B-4D	FL502	B-4B		
IC612	A-4C	R400	A-2D	R451	B-3C	R491	A-2A	R534	B-4C	R564	B-3C	R594	B-2B	R648	B-4B	R688	B-2A	C464	A-3C	C565	B-3B	C640	A-4B	L604	B-4D	FL601	B-4D		

4-9

4.9 DPR SCHEMATIC DIAGRAM (1/4) 1 9

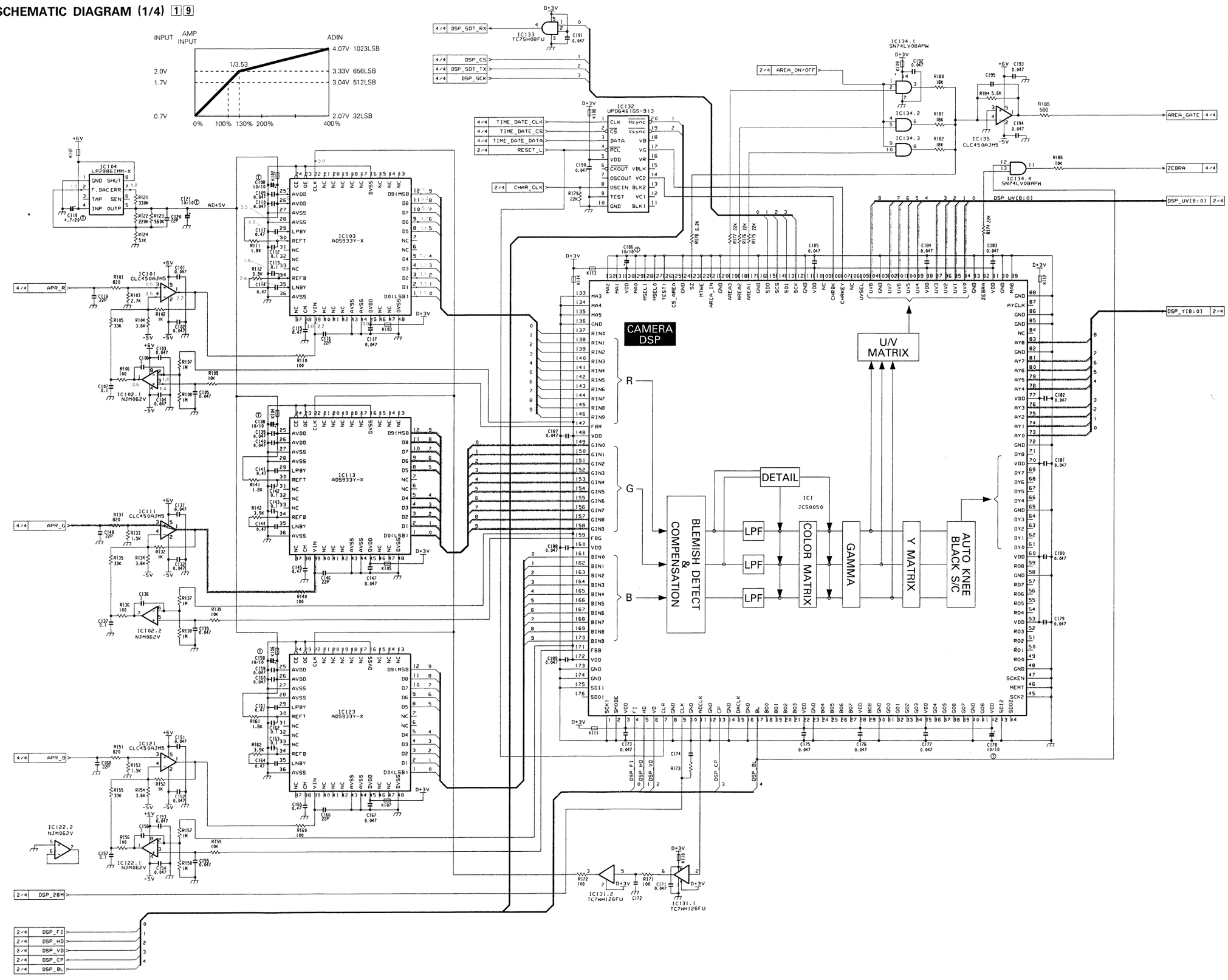

SC92681

• DPR SCHEMATIC DIAGRAM (2/4) 1 9

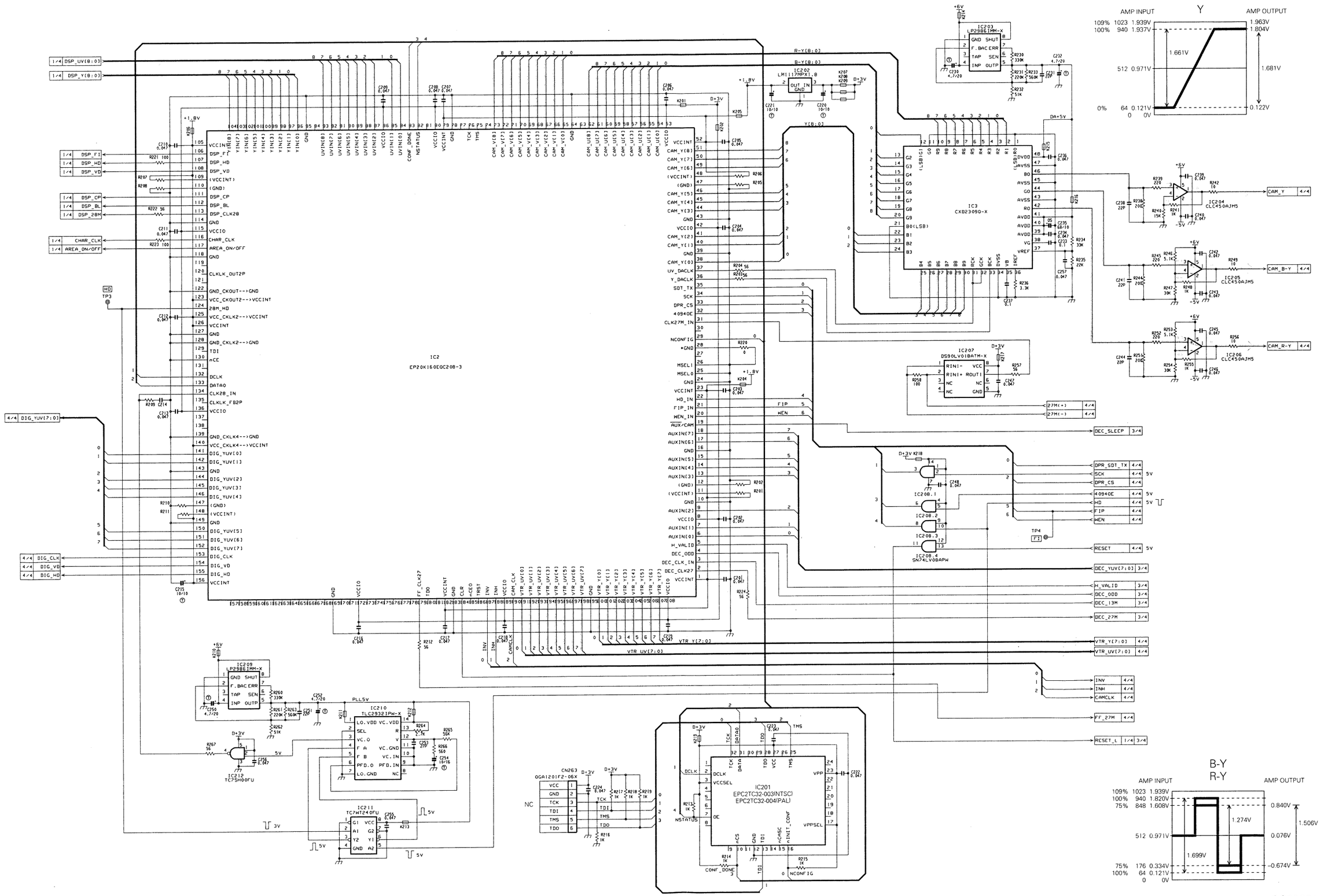

• DPR SCHEMATIC DIAGRAM (3/4) 19

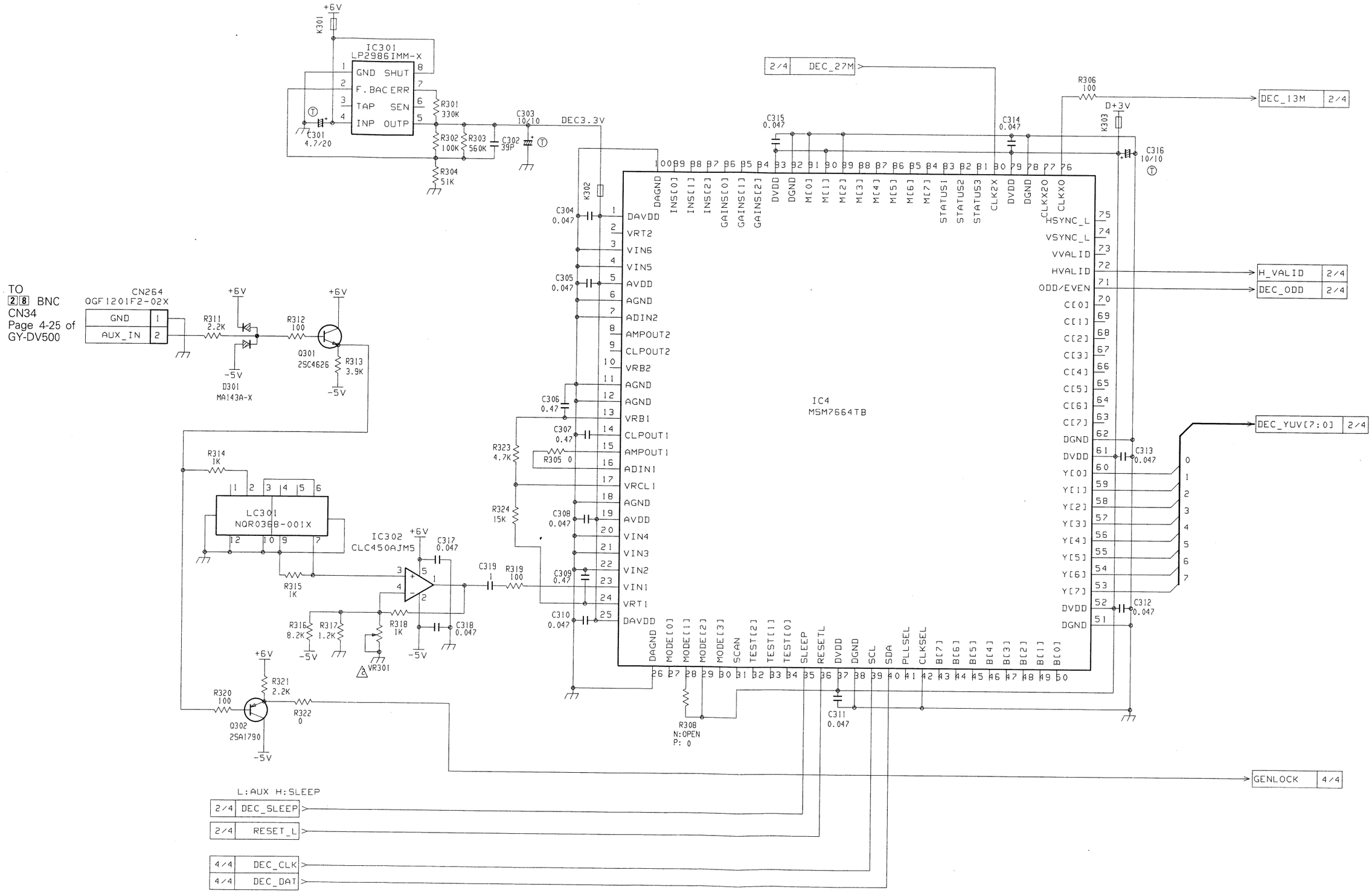

SC92681

• DPR SCHEMATIC DIAGRAM (4/4) 19

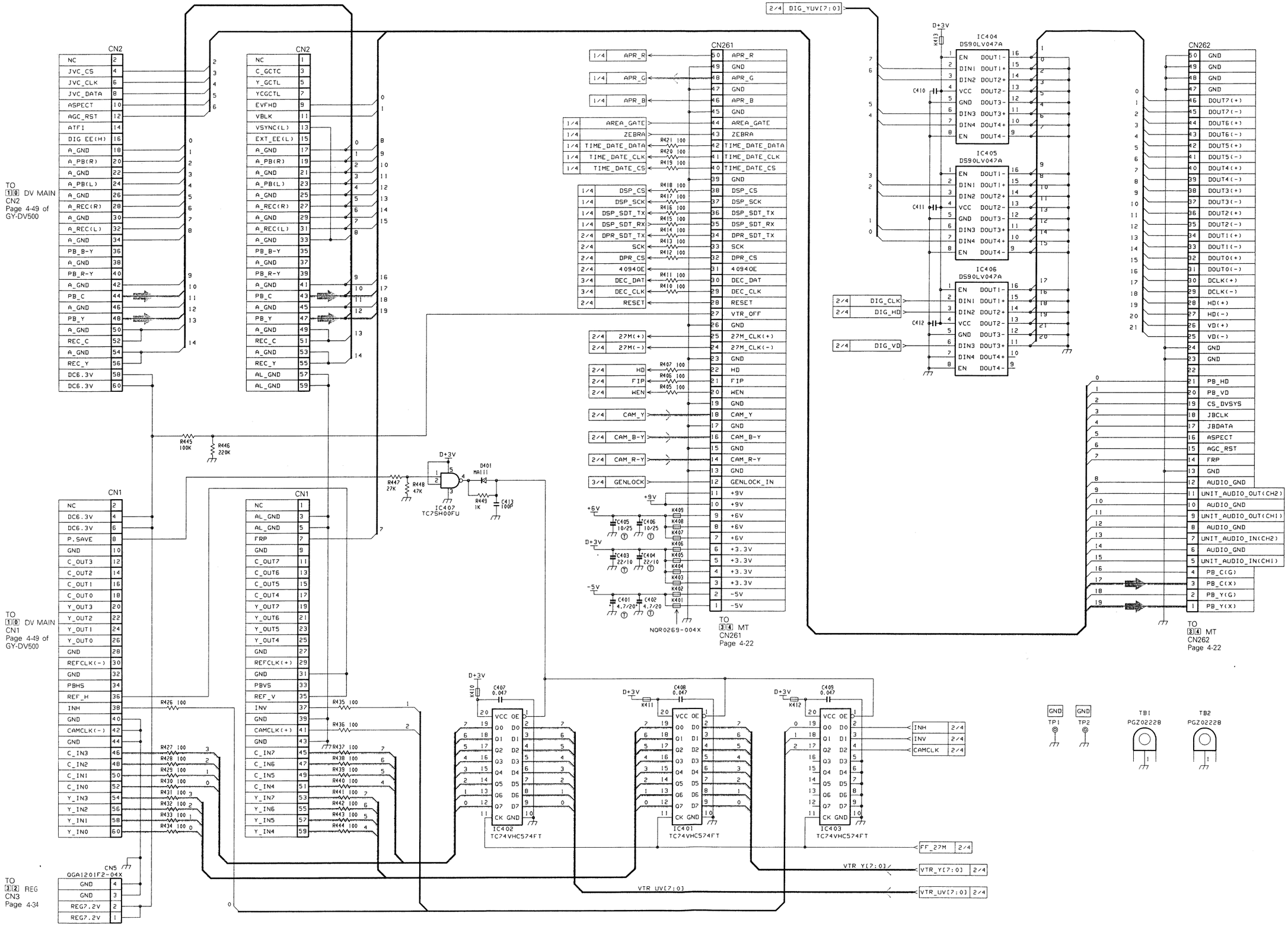

SC92681

4-13

4.10 DPR CIRCUIT BOARD

— SIDE A —

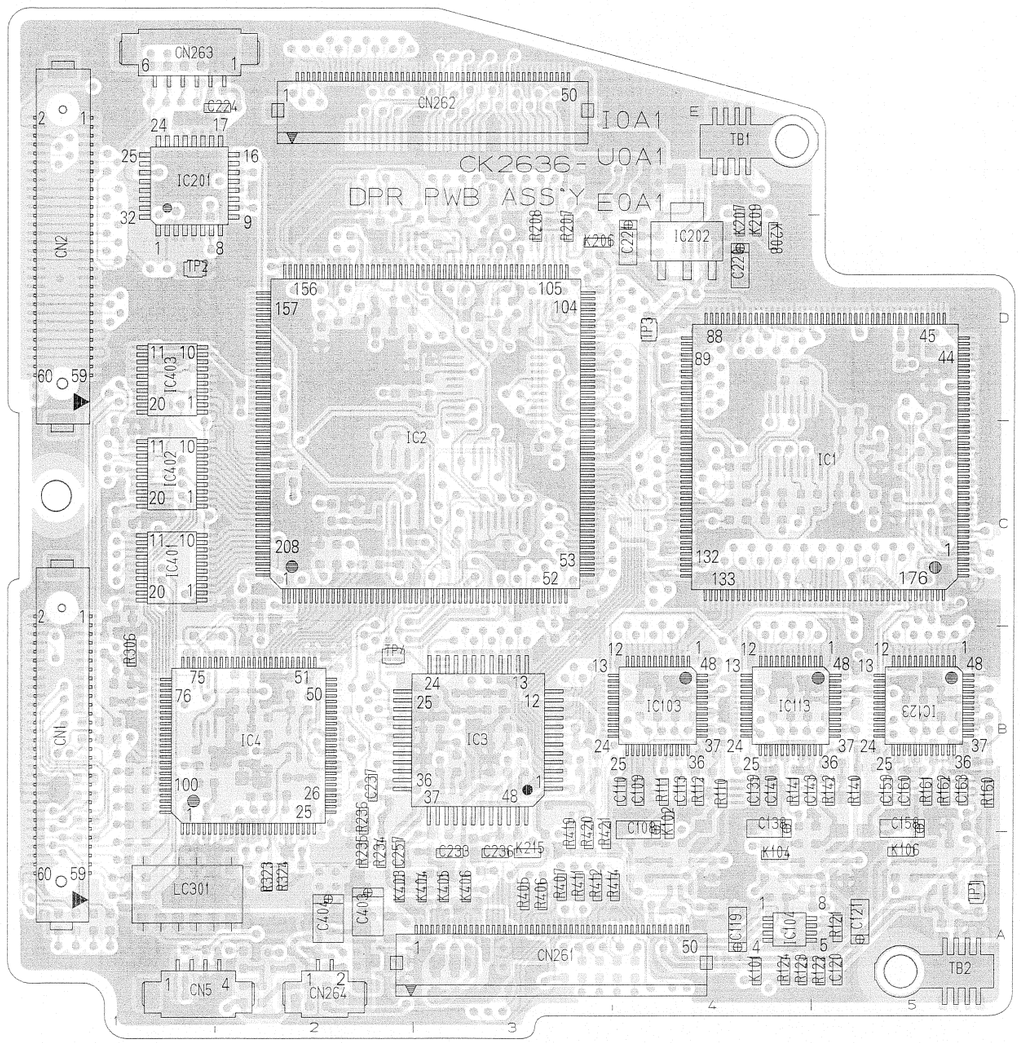

— SIDE B —

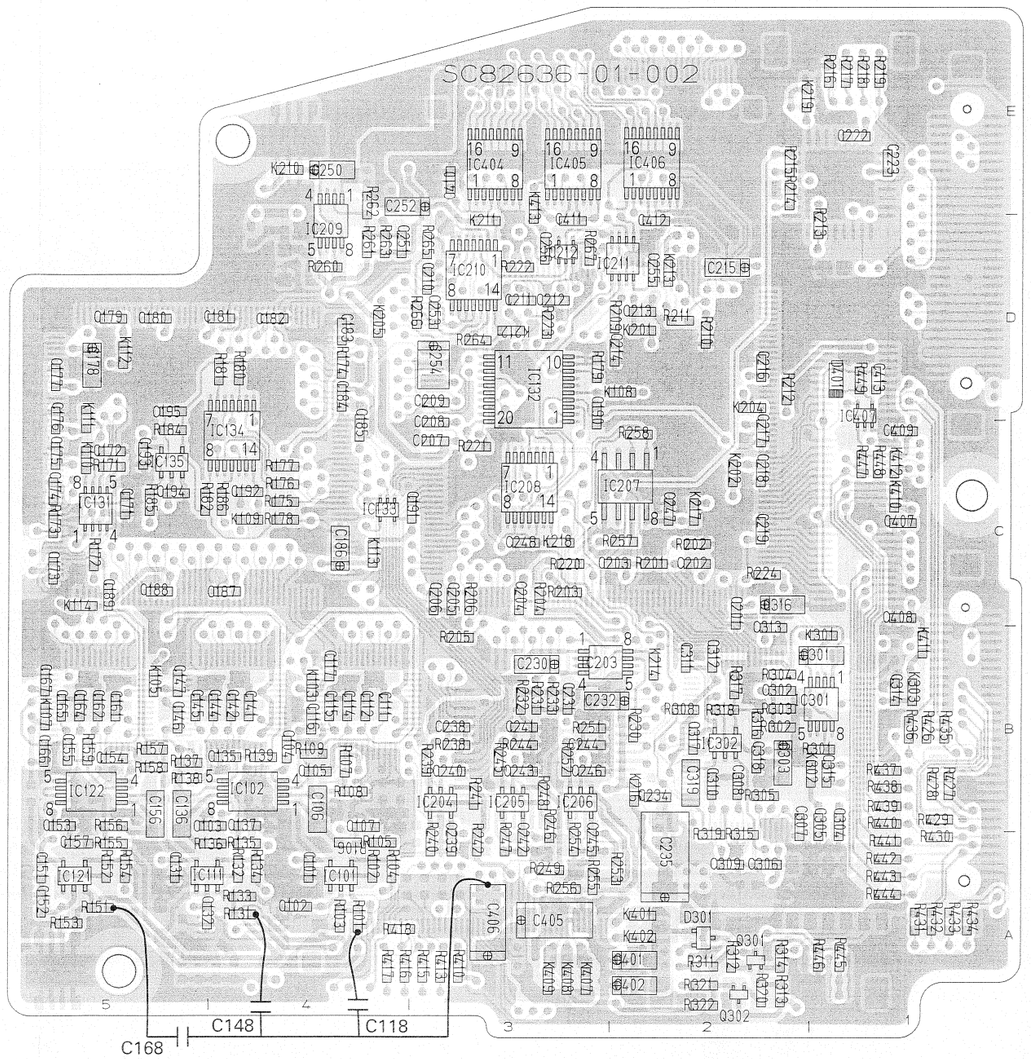

● **ADDRESS TABLE OF BOARD PARTS**

Each address may have an address error by one interval.

Side A-1C — Y axis / X axis

IC1	A-5C	IC204	B-3B	D301	B-2A	R133	B-4A	R162	A-5B	R206	B-3C	R232	B-3B	R256	B-3A	R314	B-2A	R417	B-4A	R442	B-1A	C113	A-4B	C146	B-5B	C173	B-5C	C194	B-5C	C220	A-4D
IC2	A-2C	IC205	B-3B	D401	B-1D	R134	B-4A	R171	B-5C	R207	A-3D	R233	B-3B	R257	B-2C	R315	B-2A	R418	B-3A	R443	B-1A	C114	B-4B	C147	B-5B	C174	B-5C	C195	B-5D	C221	A-4D
IC3	A-3B	IC206	B-3B			R135	B-4A	R172	B-5C	R208	A-3D	R234	A-2A	R258	B-2C	R316	B-2B	R419	A-3A	R444	B-1A	C115	B-4B	C151	B-5A	C175	B-5C	C201	B-2C	C222	B-1E
IC4	A-2B	IC207	B-2C	R101	B-4A	R136	B-4A	R173	B-5C	R209	B-2D	R235	A-2A	R260	B-4D	R317	B-2B	R420	A-3A	R445	B-1A	C116	B-4B	C152	B-5A	C176	B-5C	C202	B-2C	C223	B-1E
IC101	B-4A	IC208	B-3C	R102	B-4A	R137	B-5B	R174	B-4D	R210	B-2D	R236	A-2B	R261	B-4D	R318	B-2B	R421	A-3A	R446	B-1A	C117	B-4B	C153	B-5B	C177	B-5D	C203	B-2C	C224	A-1E
IC102	B-4B	IC209	B-4D	R103	B-4A	R138	B-5B	R175	B-4C	R211	B-2D	R238	B-3B	R262	B-4E	R319	B-2A	R426	B-1B	R447	B-1C	C119	A-4A	C154	B-5B	C178	B-5D	C204	B-3C	C230	B-3B
IC103	A-4B	IC210	B-3D	R104	B-4A	R139	B-4B	R176	B-4C	R212	B-2D	R239	B-3B	R263	B-4D	R320	B-2A	R427	B-1B	R448	B-1C	C120	A-5A	C155	B-5B	C179	B-5D	C205	B-3C	C231	B-3B
IC104	A-4A	IC211	B-2D	R105	B-4A	R140	A-5B	R177	B-4C	R213	B-1D	R240	B-3A	R264	B-3D	R321	B-2A	R428	B-1B	R449	B-1D	C121	A-5A	C156	B-5B	C180	B-5D	C206	B-3C	C232	B-2B
IC111	B-4A	IC212	B-3D	R106	B-4A	R141	A-4B	R178	B-4C	R214	B-2E	R241	B-3B	R265	B-3D	R322	B-2A	R429	B-1B			C131	B-5A	C157	B-5A	C181	B-4D	C207	B-3C	C233	A-3A
IC113	A-4B	IC301	B-1B	R107	B-4B	R142	A-5B	R179	B-3D	R215	B-2E	R242	B-3A	R266	B-3D	R323	A-2A	R430	B-1A	C101	B-4A	C132	B-4A	C158	A-5A	C182	B-4D	C208	B-3C	C234	B-2B
IC121	B-5A	IC302	B-2B	R108	B-4B	R151	B-5A	R180	B-4D	R216	B-1E	R244	B-3B	R267	B-3D	R324	A-2A	R431	B-1A	C102	B-4A	C135	B-4B	C159	A-5B	C183	B-4D	C209	B-3D	C235	B-2A
IC122	B-5B	IC401	A-1C	R109	B-4B	R152	B-5A	R181	B-4D	R217	B-1E	R245	B-3B	R301	B-1B	R405	A-3A	R432	B-1A	C103	B-4B	C136	B-5B	C160	A-5B	C184	B-4D	C210	B-3D	C236	A-3A
IC123	A-5B	IC402	A-1C	R110	A-4B	R153	B-5A	R182	B-4C	R218	B-1E	R246	B-3A	R302	B-2B	R406	A-3A	R433	B-1A	C104	B-4B	C137	B-4B	C161	B-5B	C185	B-4C	C211	B-3D	C237	A-2B
IC131	B-5C	IC403	A-1D	R111	A-4B	R154	B-5A	R184	B-5C	R219	B-1E	R247	B-3A	R303	B-2B	R407	A-3A	R434	B-1A	C105	B-4B	C138	A-4A	C162	B-5B	C186	B-4C	C212	B-3D	C238	B-3B
IC132	B-3D	IC404	B-3E	R112	A-4B	R155	B-5A	R185	B-5C	R220	B-3C	R248	B-3B	R304	B-2B	R410	B-3A	R435	B-1B	C106	B-4B	C139	A-4B	C163	A-5B	C187	B-4C	C213	B-2D	C239	B-3A
IC133	B-4C	IC405	B-3E	R121	A-5A	R156	B-5B	R186	B-4C	R221	B-3C	R249	B-3A	R305	B-2B	R411	A-3A	R436	B-1B	C107	B-4B	C140	A-4B	C164	B-5B	C188	B-5C	C214	B-2D	C240	B-3B
IC134	B-4C	IC406	B-2E	R122	A-4A	R157	B-5B	R201	B-2C	R222	B-3D	R251	B-3B	R306	A-1B	R412	A-3A	R437	B-1B	C108	A-4A	C141	B-4B	C165	B-5B	C189	B-5C	C215	B-2D	C241	B-3B
IC135	B-5C	IC407	B-1D	R123	A-4A	R158	B-5B	R202	B-2C	R223	B-3D	R252	B-3B	R308	B-2B	R413	B-3A	R438	B-1B	C109	A-4B	C142	B-4B	C166	B-5B	C190	B-3D	C216	B-2D	C242	B-3A
IC201	A-1E			R124	A-4A	R159	B-5B	R203	B-3C	R224	B-2C	R253	B-2A	R311	B-2A	R414	A-3A	R439	B-1B	C110	A-3B	C143	A-4B	C167	B-5B	C191	B-3C	C217	B-2C	C243	B-3B
IC202	A-4D	Q301	B-2A	R131	B-4A	R160	A-5B	R204	B-3C	R230	B-2B	R254	B-3A	R312	B-2A	R415	B-3A	R440	B-1B	C111	B-4B	C144	B-4B	C171	B-5C	C192	B-4C	C218	B-2C	C244	B-3B
IC203	B-2B	Q302	B-2A	R132	B-4A	R161	A-5B	R205	B-3B	R231	B-3B	R255	B-3A	R313	B-2A	R416	B-3A	R441	B-1A	C112	B-4B	C145	B-5B	C172	B-5C	C193	B-5C	C219	B-2C	C245	B-3A

4-14

— INNER PATTERN (SIDE A) —

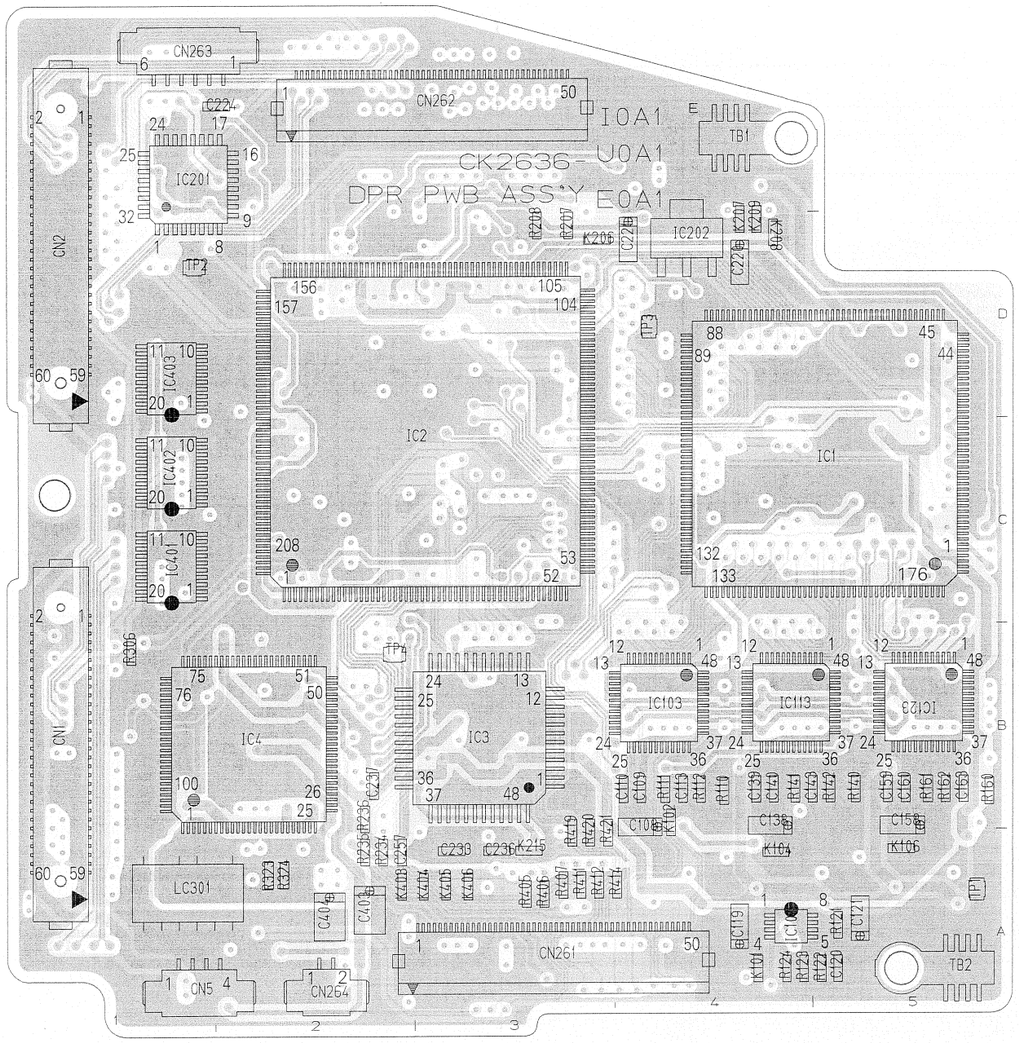

— INNER PATTERN (SIDE B) —

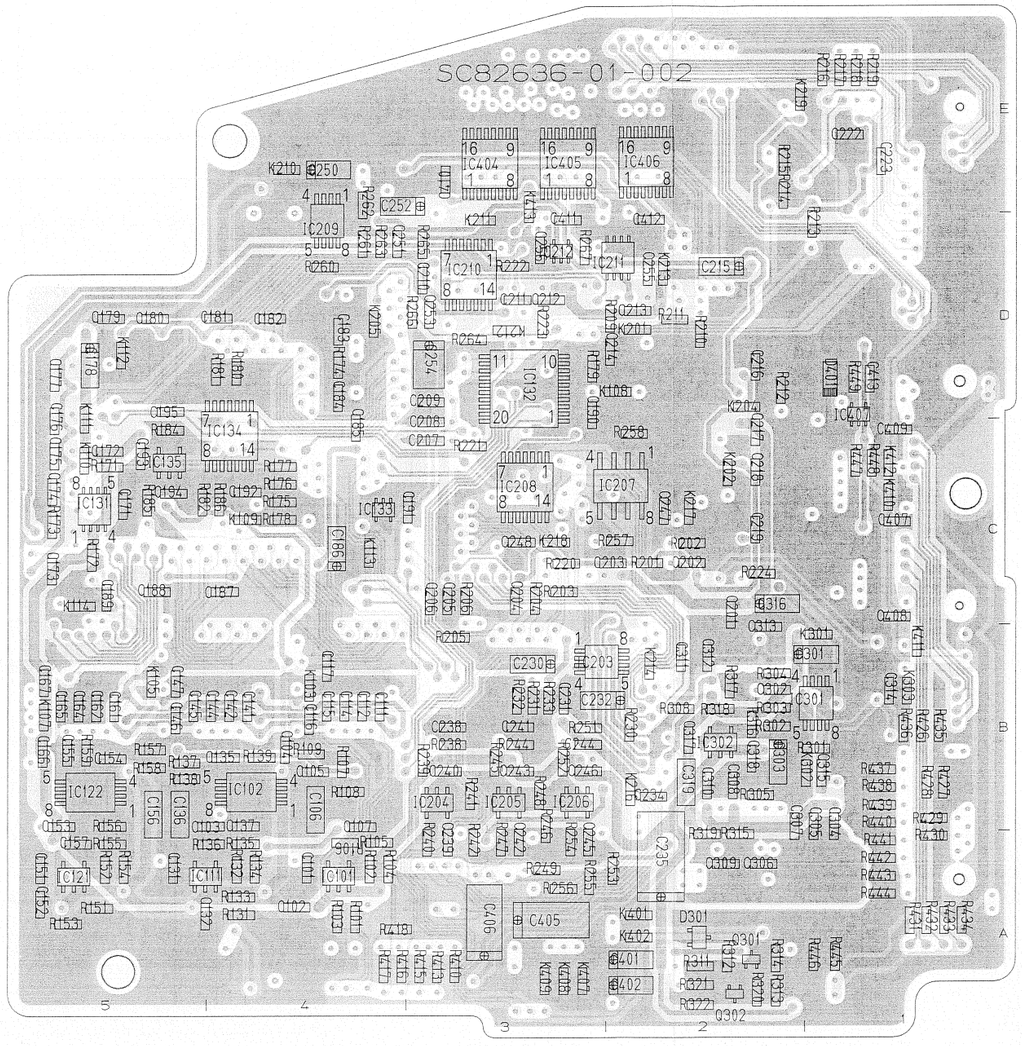

C246	B-3B	C311	B-2B	C413	B-1D	K113	B-4C	K302	B-1B	CN5	A-1A
C247	B-2C	C312	B-2B			K114	B-5C	K303	B-1B	CN261	A-3A
C248	B-3C	C313	B-2B	TP1	A-5A	K201	B-2D	K401	B-2A	CN262	A-3E
C250	B-4E	C314	B-1B	TP2	A-1D	K202	B-2C	K402	B-2A	CN263	A-1E
C251	B-3D	C315	B-1B	TP3	A-4D	K204	B-2D	K403	A-2A	CN264	A-2A
C252	B-3E	C316	B-2C	TP4	A-2B	K205	B-4D	K404	A-2A		
C253	B-3D	C317	B-2B			K206	A-3D	K405	A-3A		
C254	B-3D	C318	B-2B	LC301	A-1A	K207	A-4D	K406	A-3A		
C255	B-2D	C319	B-2B			K208	A-4D	K407	B-3A		
C256	B-3D	C401	B-2A	K101	A-4A	K209	A-4D	K408	B-3A		
C257	A-2A	C402	B-2A	K102	A-4B	K210	B-4E	K409	B-3A		
C301	B-1B	C403	A-2A	K103	B-4B	K211	B-3D	K410	B-1C		
C302	B-2B	C404	A-2A	K104	A-4A	K212	B-3D	K411	B-1B		
C303	B-2B	C405	B-3A	K105	B-5B	K213	B-2D	K412	B-1C		
C304	B-1B	C406	B-3A	K106	A-5A	K214	B-2B	K413	B-3D		
C305	B-1B	C407	B-1C	K107	B-5B	K215	A-3A				
C306	B-2A	C408	B-1B	K108	B-2D	K216	B-2B	TB1	A-4E		
C307	B-1B	C409	B-1C	K109	B-4C	K217	B-2C	TB2	A-5A		
C308	B-2B	C410	B-3E	K110	B-5C	K218	B-3C				
C309	B-2A	C411	B-3D	K111	B-5C	K219	B-1E	CN1	A-1B		
C310	B-2B	C412	B-2D	K112	B-5D	K301	B-1B	CN2	A-1D		

4-15

4.11 SE SCHEMATIC DIAGRAM (1/2) 1 6

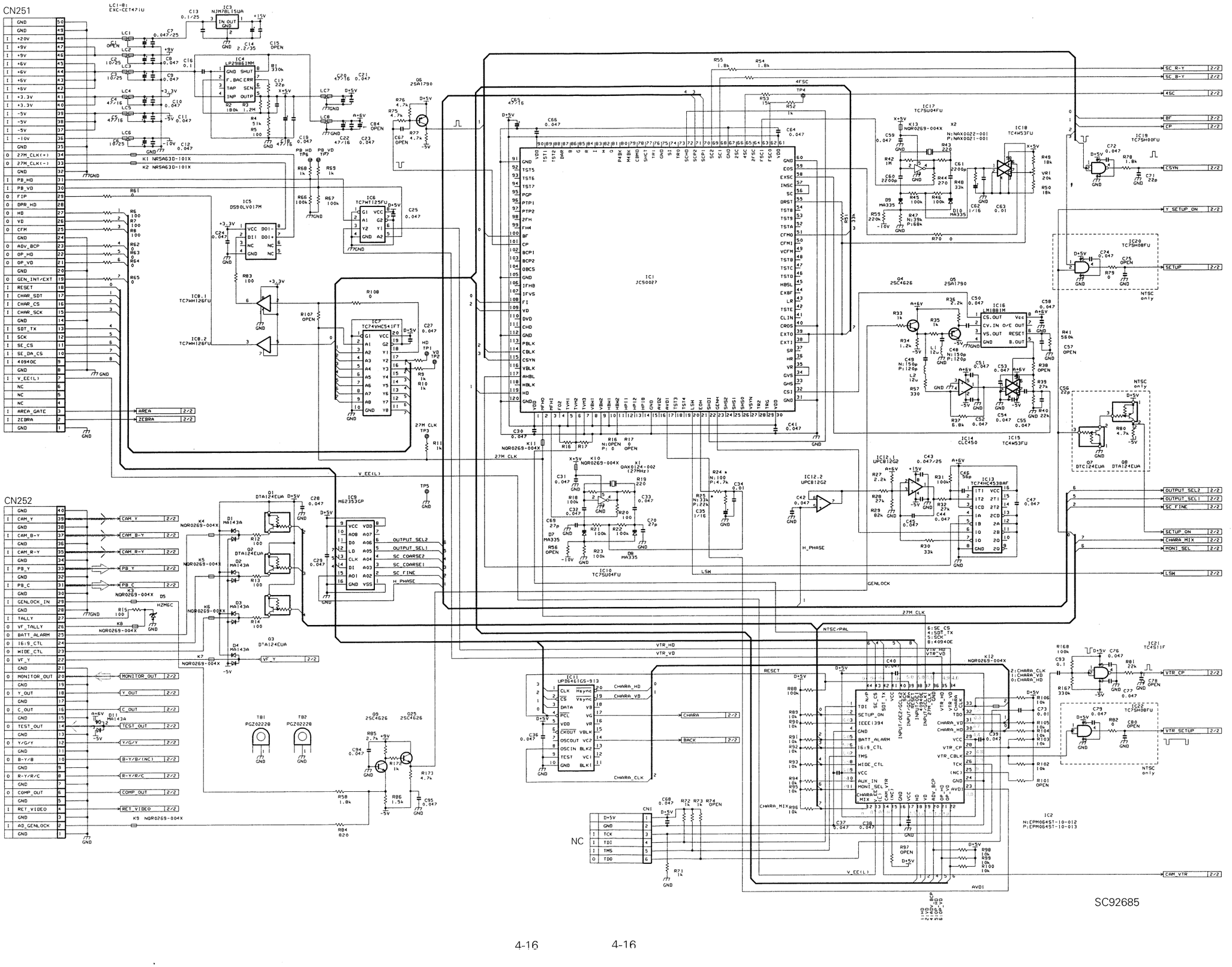

• SE SCHEMATIC DIAGRAM (2/2) 16

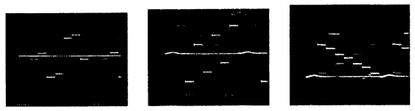

H-rate
1.9Vp-p

H-rate
2.4Vp-p

H-rate
1.8Vp-p

H-rate
0.8Vp-p

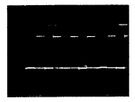

H-rate
0.8Vp-p

H-rate
0.8Vp-p

H-rate
1.1Vp-p

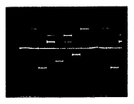

H-rate
0.7Vp-p

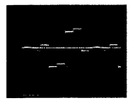

H-rate
0.7Vp-p

H-rate
1.05Vp-p

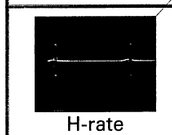

H-rate
0.58Vp-p

SC92685

4-17

4.12 SE CIRCUIT BOARD

– SIDE A –

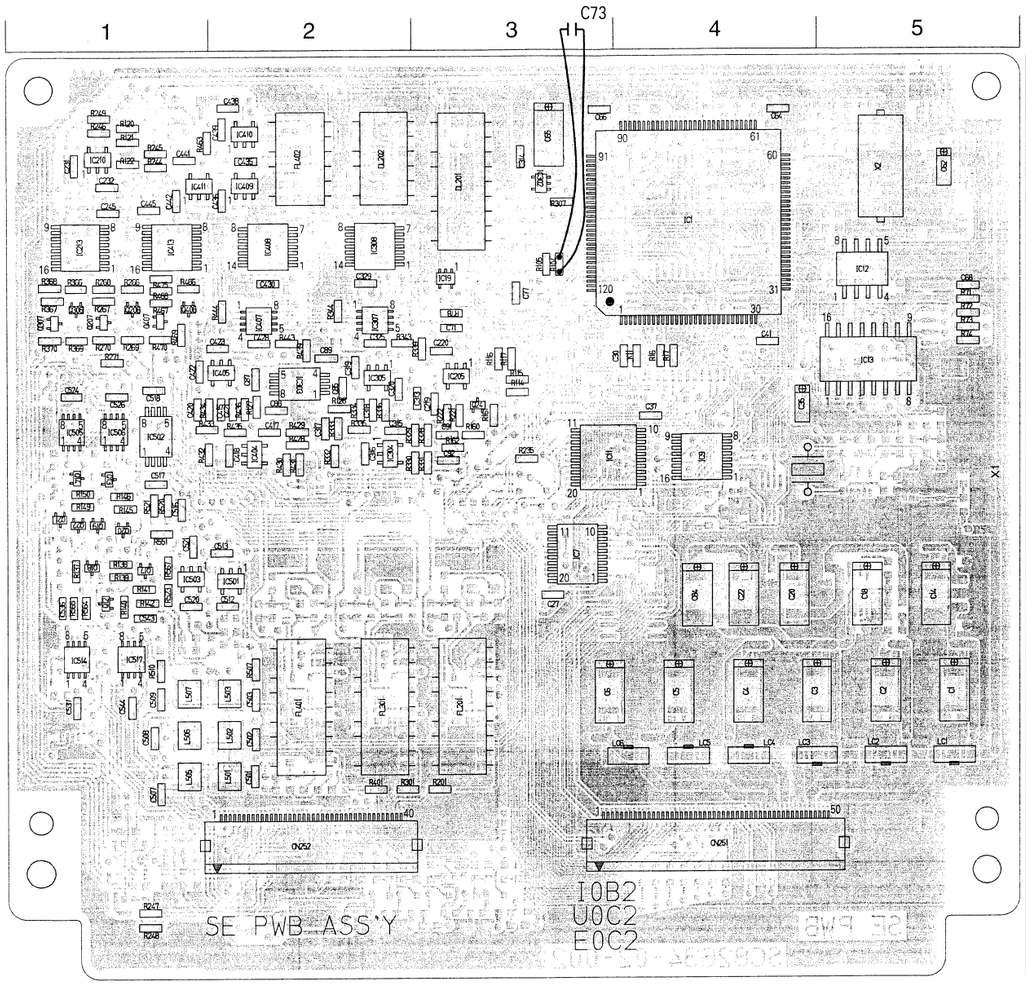

– SIDE B –

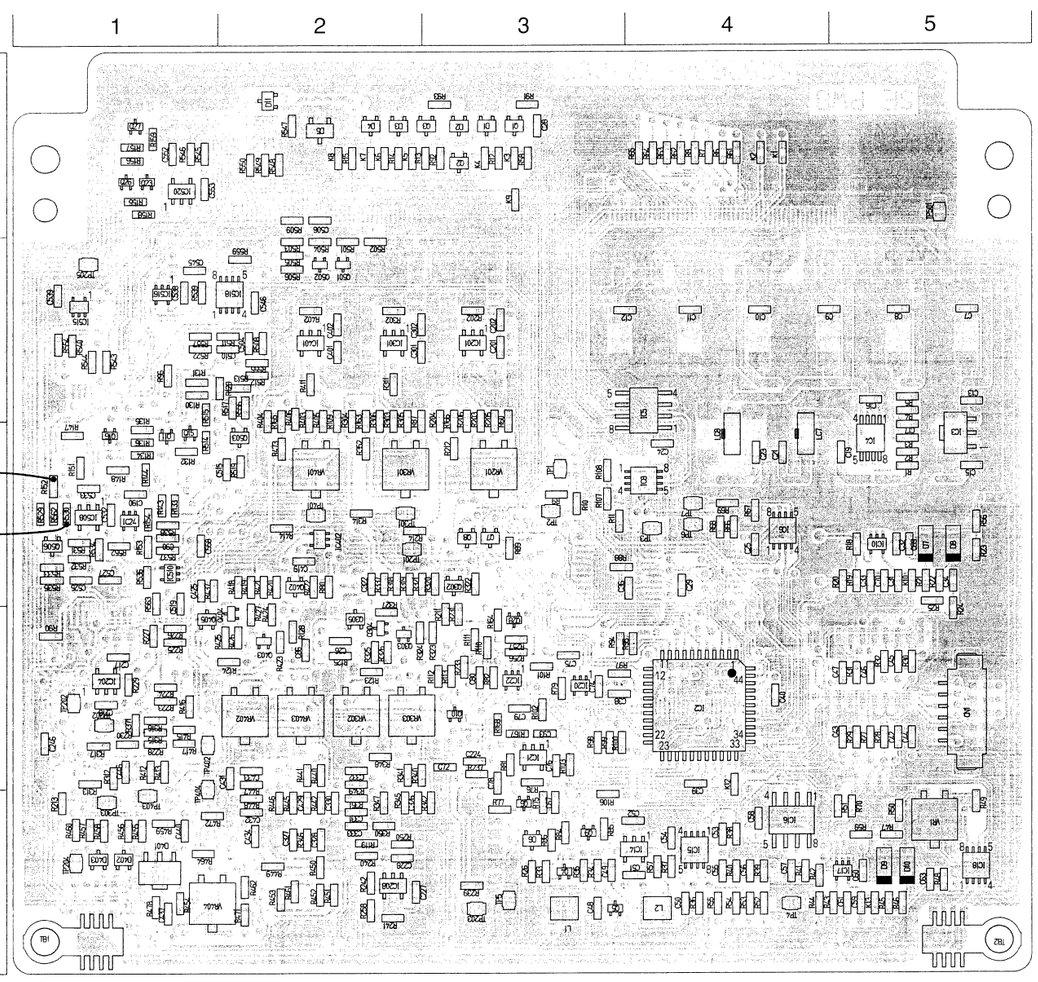

● **ADDRESS TABLE OF BOARD PARTS**

Each address may have an address error by one interval.

Side A-1C — Y axis / X axis

IC1	A-4E	IC401	B-2B	Q13	A-1C	D3	B-2A	R24	B-5D	R60	B-3C	R97	B-3D	R134	B-1C	R202	B-3B	R258	B-2E	R333	A-2C	R416	B-1D	R453	B-2E	R515	B-1B	R564	A-1C	C23	B-4C	C59	B-5E	C219	A-3D	C421	A-2D	C519	B-1C	TP4	B-4E	LC2	A-5B
IC2	B-4D	IC402	B-2C	Q14	A-1C	D4	B-2A	R25	B-5C	R61	B-4A	R98	B-3D	R135	B-1C	R203	B-3C	R266	A-1D	R334	A-2D	R417	B-1D	R454	B-1E	R517	B-2B	R565	A-1C	C24	B-4C	C60	B-5E	C220	A-3D	C422	A-1D	C520	A-1C	TP5	B-3E	LC3	A-5B
IC3	B-5C	IC404	A-2C	Q15	B-1C	D5	B-2A	R26	B-3E	R62	B-4A	R99	B-3D	R136	B-1C	R204	B-3C	R267	A-1D	R335	A-2C	R418	B-2C	R455	B-1E	R519	B-2C	R567	A-1C	C25	B-4C	C61	B-5E	C224	B-3D	C423	A-2D	C521	A-1C	TP6	B-4C	LC4	A-4B
IC4	B-5C	IC405	A-2D	Q16	B-1C	D6	B-3E	R27	B-5D	R63	B-4A	R100	B-3D	R137	A-1C	R205	B-3C	R268	A-1D	R336	A-2D	R419	B-2C	R456	B-1E	R520	A-1C			C26	B-2D	C62	A-5E	C227	B-2E	C425	B-1C	C524	A-1D	TP7	B-4C	LC5	A-4B
IC5	B-4B	IC407	A-2D	Q17	A-1C	D7	B-5C	R28	B-5D	R64	B-4A	R101	B-3D	R138	A-1C	R206	B-3C	R269	A-1D	R337	B-2C	R420	B-2C	R457	B-1E	R521	A-1C	VR1	B-5E	C27	A-3C	C63	B-5E	C228	B-2E	C428	A-2D	C525	B-1C	TP201	B-2C	LC6	A-4B
IC6	B-4C	IC408	A-2D	Q18	A-1C	D8	B-5C	R29	B-5D	R65	B-4A	R102	B-3D	R139	A-1C	R211	B-3D	R270	A-1D	R339	A-3D	R421	B-2C	R458	B-1E	R522	B-1B	VR201	B-3C	C28	B-3A	C64	A-4E	C231	A-1E	C429	B-2E	C526	A-1D	TP202	B-1D	LC7	B-4C
IC7	A-3C	IC409	A-2E	Q19	A-1C	D9	B-5E	R30	B-5D	R66	B-4C	R103	B-3D	R140	A-1C	R212	B-3C	R271	A-1D	R340	B-3D	R422	B-2C	R459	B-1E	R523	A-1C	VR301	B-2C	C29	B-4C	C65	A-3E	C232	A-1E	C430	A-2D	C527	B-1C	TP203	B-3E	LC8	B-4C
IC8	B-4C	IC410	A-2E	Q20	A-1C	D10	B-5E	R31	B-5D	R67	B-4C	R104	A-3D	R141	A-1C	R213	B-1E	R301	A-2B	R341	B-2D	R423	B-2D	R460	B-1E	R529	B-1C	VR302	B-2D	C30	A-4D	C66	A-3E	C245	A-1E	C431	B-2D	C532	B-1C	TP204	B-1E		
IC9	A-4C	IC411	A-1E	Q21	A-1C	D11	B-2A	R32	B-5D	R68	B-4C	R105	A-3D	R142	A-1C	R214	B-2C	R302	B-2B	R342	B-3E	R424	B-2D	R461	B-2E	R530	B-1C	VR303	B-2D	C31	B-5C	C67	B-3E	C246	B-1D	C432	B-2E	C533	B-1C	TP205	B-1B	CN1	B-5D
IC10	B-5C	IC413	A-1D	Q22	A-1C	D401	B-1E	R33	B-3E	R69	B-4C	R106	B-3E	R143	B-1C	R221	A-3D	R303	B-2C	R343	A-2D	R425	B-2D	R462	B-2E	R531	B-1C	VR401	B-2C	C32	B-5C	C68	A-5D	C301	B-3B	C433	B-2D	C536	A-1C	TP301	B-2C	CN251	A-4A
IC11	A-3C	IC501	A-2C	Q23	B-1A	D402	B-1E	R34	B-3E	R70	B-5E	R107	B-3C	R144	B-1C	R222	A-3D	R304	B-2C	R344	A-2D	R426	B-2D	R463	A-1E	R532	B-1C	VR402	B-2D	C33	B-5C	C69	B-5C	C302	B-3B	C434	B-2E	C537	A-1B	TP302	B-1D	CN252	A-2A
IC12	A-5D	IC502	A-1C	Q24	A-3D	D403	B-1E	R35	B-3E	R71	A-5D	R108	B-3C	R145	A-1C	R223	B-1D	R305	B-2C	R345	B-2E	R427	B-2D	R464	B-1E	R533	B-1C	VR403	B-2D	C34	B-5C	C70	B-5C	C313	A-3D	C435	A-2E	C538	B-1B	TP303	B-1E		
IC13	A-5D	IC503	A-1C	Q26	B-1A			R36	B-4E	R72	A-5D	R109	B-2C	R146	A-1C	R224	B-1D	R306	B-2C	R346	B-2E	R428	A-2C	R466	A-1D	R534	B-1C	VR404	B-1E	C35	A-4D	C71	A-3D	C314	A-3E	C436	A-2E	C539	B-1B	TP401	B-2C	FL201	A-3B
IC14	B-4E	IC505	A-1C	Q27	B-1A	R1	B-5C	R37	B-4E	R73	A-5D	R110	B-3D	R147	B-1C	R225	B-1D	R307	A-3E	R347	B-2E	R429	A-2C	R467	A-1D	R535	B-1C			C36	B-4C	C72	B-3D	C315	A-2C	C437	B-1E	C543	A-1B	TP402	B-1D	FL301	A-2B
IC15	B-4E	IC506	A-1C	Q28	B-3D	R2	B-5C	R38	B-4E	R74	A-5D	R111	B-3D	R148	B-1C	R226	B-1D	R311	B-2B	R348	B-2D	R430	A-2C	R468	A-1D	R536	B-1C	C1	A-5B	C37	A-4D	C74	B-3D	C316	A-2C	C438	A-2E	C544	A-1B	TP403	B-1E	FL401	A-2B
IC16	B-4E	IC508	B-1C	Q206	A-1D	R3	B-5C	R39	B-4E	R75	B-3E	R112	B-3D	R149	A-1C	R227	B-1D	R312	B-1D	R349	B-2D	R431	A-2C	R469	A-1D	R537	B-1C	C2	A-5B	C38	B-3D	C75	B-3D	C317	A-2C	C439	A-2E	C545	B-1B	TP404	B-1E	FL402	A-2E
IC17	B-5E	IC510	B-1C	Q207	A-1D	R4	B-5B	R40	B-4E	R76	B-3D	R113	B-3D	R150	A-1C	R228	B-1D	R313	B-1D	R350	B-2E	R432	A-2C	R470	A-1D	R538	B-1C	C3	A-5B	C39	B-4D	C76	B-3D	C318	A-2D	C440	B-1E	C546	B-2B	TP501	B-5A		
IC18	B-5E	IC514	A-1B	Q302	B-3C	R5	B-5B	R41	B-4E	R77	B-3E	R114	A-3D	R151	B-1C	R229	B-1D	R314	B-2C	R351	B-2E	R433	A-1C	R471	B-2E	R539	B-1B	C4	A-4B	C40	B-4D	C77	A-3D	C319	A-2D	C441	A-1E	C552	B-1A			X1	A-4C
IC19	A-3D	IC515	B-1B	Q303	B-2D	R6	B-4A	R42	B-4E	R78	A-3D	R115	A-3D	R152	B-1C	R230	B-1D	R315	B-1D	R352	B-2C	R434	A-2D	R472	B-1E	R540	B-1B	C5	A-4B	C41	A-4D	C78	B-3D	C320	A-2D	C442	A-1E	C553	B-1A	K1	B-4A	X2	A-5E
IC20	B-3D	IC516	B-1B	Q304	B-2D	R7	B-4A	R43	B-5E	R79	B-3D	R116	A-3D	R153	B-1C	R231	B-3D	R316	B-1D	R366	A-1D	R435	A-2C	R473	B-2C	R543	B-1B	C6	A-3B	C42	B-5D	C79	B-3D	C322	B-2C	C445	A-1E	C558	B-1C	K2	B-4A		
IC21	B-3D	IC517	A-1B	Q305	B-2D	R8	B-4A	R44	B-4E	R80	B-2C	R117	A-3D	R154	B-1C	R233	B-3D	R317	B-1D	R367	A-1D	R436	A-2D	R475	A-1D	R544	B-1B	C7	B-5B	C43	B-5D	C80	B-3D	C325	A-2D	C446	B-1D			K3	B-3A		
IC22	B-3D	IC518	B-2B	Q306	A-1D	R9	B-3C	R45	B-5E	R81	B-3D	R119	B-2E	R155	B-1A	R235	A-3C	R318	B-2C	R368	A-1D	R437	B-1C	R478	B-1E	R545	B-1A	C8	B-5B	C44	B-5D	C84	A-4C	C326	B-2E	C501	A-2B	L1	B-3E	K4	B-3A		
IC24	B-1C	IC520	B-1A	Q307	A-1D	R10	B-3C	R46	B-5E	R82	B-3D	R120	A-1E	R156	B-1A	R237	B-3D	R319	B-2C	R369	A-1D	R439	A-2D	R501	B-2B	R546	B-1A	C9	B-5B	C45	B-5D	C85	A-2D	C327	B-2E	C502	A-2B	L2	B-4E	K5	B-2A		
IC201	B-3B			Q402	B-2C	R11	B-3C	R47	B-5E	R84	B-3E	R121	A-1E	R157	B-1A	R239	B-3E	R320	B-3C	R370	A-1D	R440	B-2D	R502	B-2B	R547	B-2A	C10	B-4B	C46	B-5D	C86	B-2D	C328	B-2E	C503	A-2B	L501	A-2B	K6	B-2A		
IC204	B-1D	Q1	B-3A	Q403	B-2D	R12	B-3A	R48	B-5E	R85	B-3E	R122	A-1E	R158	B-1A	R240	B-2E	R321	B-3C	R371	B-1D	R441	B-2D	R503	B-2B	R548	B-2A	C11	B-4B	C47	B-5D	C87	A-2D	C329	A-2D	C504	B-2B	L502	A-2B	K7	B-2A		
IC205	A-3D	Q2	B-3A	Q404	B-2D	R13	B-3A	R49	B-5E	R86	B-3E	R123	B-2D	R159	B-1A	R241	B-2E	R322	B-3C	R401	A-2B	R442	B-2E	R504	B-2B	R549	B-2A	C12	B-4B	C48	B-3E	C88	A-2D	C330	B-2E	C506	B-2A	L503	A-2B	K8	B-2A		
IC208	B-2E	Q3	B-3A	Q405	B-1D	R14	B-2A	R50	B-5E	R87	B-3C	R124	B-2D	R160	A-3C	R242	B-2E	R323	B-3D	R402	B-2B	R443	A-2D	R505	B-2B	R550	B-2A	C13	B-5B	C49	B-3E	C89	A-2D	C331	B-2E	C507	A-1B	L505	A-1B	K9	B-3A		
IC210	A-1E	Q4	B-3E	Q406	A-1D	R15	B-2A	R51	B-5E	R88	B-3C	R125	B-2D	R161	A-3D	R244	A-1E	R324	B-2D	R403	B-2C	R444	A-2D	R506	B-2B	R551	A-1C	C14	A-5C	C50	B-4E	C90	B-1C	C332	B-2D	C508	A-1B	L506	A-1B	K10	B-5C		
IC213	A-1D	Q5	B-3E	Q407	A-1D	R16	A-4D	R52	B-4E	R89	B-3C	R126	A-2D	R162	A-3C	R245	A-1E	R325	B-2D	R404	B-2C	R445	B-2E	R507	A-2B	R552	B-1C	C15	B-5C	C51	B-4E	C91	A-3C	C333	B-2E	C509	A-1B	L507	A-1B	K11	A-4D		
IC301	B-2B	Q6	B-3E	Q501	B-2B	R17	A-4D	R53	B-4E	R90	B-1D	R127	A-2D	R163	B-2C	R246	A-1E	R326	B-2D	R405	B-2C	R446	B-2E	R508	B-2B	R554	B-1B	C16	B-5B	C52	B-4E	C92	A-3C	C401	B-2B	C510	B-2B			K12	B-4D		
IC302	A-3E	Q7	B-3C	Q502	B-2B	R18	B-5C	R54	B-4E	R91	B-3A	R128	B-2D	R164	B-3D	R247	A-1A	R327	B-2D	R406	B-2B	R447	B-2D	R509	B-2A	R555	B-2B	C17	B-5C	C53	B-4E	C93	B-3D	C402	B-2B	C512	A-2C	DL201	A-3E	K13	B-5E		
IC303	A-2D	Q8	B-3C	Q503	B-2C	R19	B-5C	R55	B-4E	R92	B-3A	R129	B-2B	R165	B-2C	R248	A-1A	R328	A-3C	R411	B-2B	R448	B-2E	R510	A-1B	R556	B-2B	C18	A-5C	C54	B-4E	C190	B-1C	C415	A-2D	C513	A-2C	DL202	A-2E				
IC304	A-2C	Q9	B-3E	Q506	B-1C	R20	B-5C	R56	B-5C	R93	B-3A	R130	B-1B	R166	B-3C	R249	A-1E	R329	A-3C	R412	B-1D	R449	B-2E	R511	B-2B	R557	B-1B	C19	B-5C	C55	B-4E	C201	B-3B	C417	A-2C	C515	B-2C			TB1	B-1E		
IC305	A-2D	Q10	B-3D			R21	B-5C	R57	B-4E	R94	B-3D	R131	B-1B	R167	B-3D	R250	B-2E	R330	A-3C	R413	B-1D	R450	B-2E	R512	B-2B	R559	B-2B	C20	A-4C	C56	B-4E	C202	B-3B	C418	A-2C	C516	A-1C	TP1	B-3C	TB2	B-5E		
IC307	A-2D	Q11	B-1C	D1	B-3A	R22	B-5C	R58	B-3A	R95	B-4D	R132	B-1C	R168	B-3D	R256	B-3D	R331	A-3C	R414	B-2C	R451	B-2E	R513	B-2B	R562	B-1C	C21	B-4C	C57	B-4E	C217	B-1D	C419	B-2C	C517	A-1C	TP2	B-3C				
IC308	A-2D	Q12	A-1C	D2	B-3A	R23	B-5C	R59	B-5E	R96	B-1B	R133	B-1C	R201	A-3B	R257	B-3D	R332	A-2C	R415	B-1D	R452	B-2E	R514	B-1C	R563	B-1C	C22	A-4C	C58	B-4E	C218	B-1D	C420	A-1D	C518	A-1D	TP3	B-4C	LC1	A-5B		

4-18

• SE SCHEMATIC DIAGRAM (2/2) 16

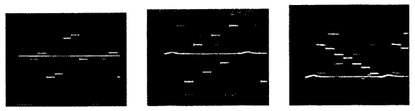

H-rate
1.9Vp-p

H-rate
2.4Vp-p

H-rate
1.8Vp-p

H-rate
0.8Vp-p

H-rate
0.8Vp-p

H-rate
0.8Vp-p

H-rate
1.1Vp-p

H-rate
0.7Vp-p

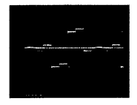

H-rate
0.7Vp-p

H-rate
1.05Vp-p

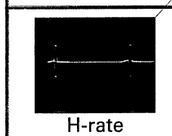

H-rate
0.58Vp-p

SC92685

4-17

4.13 SS/CP SCHEMATIC DIAGRAM (1/2) 3 1

CP

S901	Function
1	Adj. Mode
2	Check Mode
3	VTR/RS232C
4	Not used
5	Correct mode
6	Not used
7	Not used
8	DV550/DV550U

Ver.	ASS'Y NO.	PL** NO.	
		IC401	IC402
I	CK2632108	PLSL1104	PLSC1360
U	CK2632U0C	PLSL1104	PLSC1360
E	CK2632E0C	PLSL1104	PLSC1360

TO 3 4 MT CN101 Page 4-22

SC92690

• SS/CP SCHEMATIC DIAGRAM (2/2) 3 1

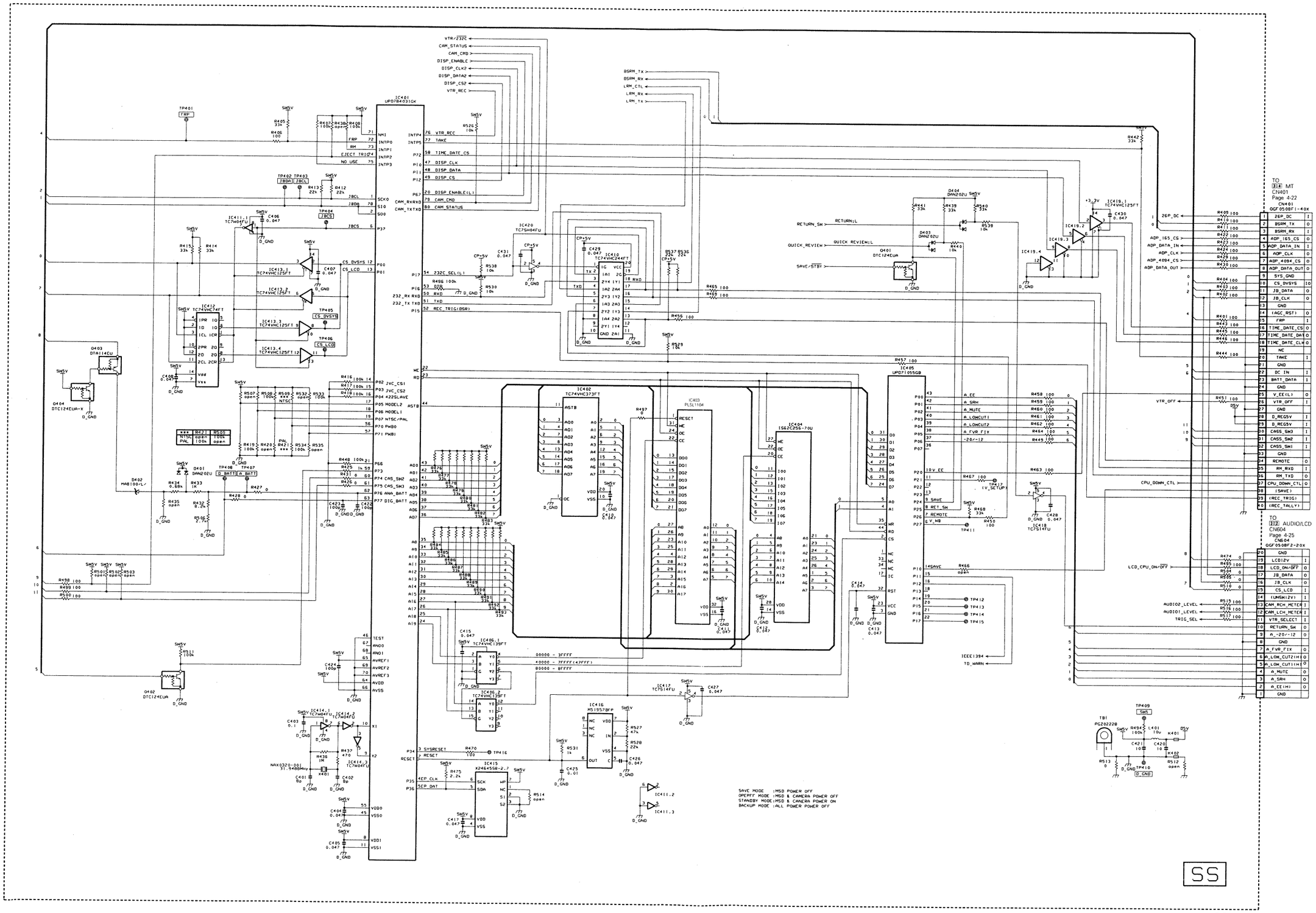

4.14 SS/CP CIRCUIT BOARD

— SIDE A —

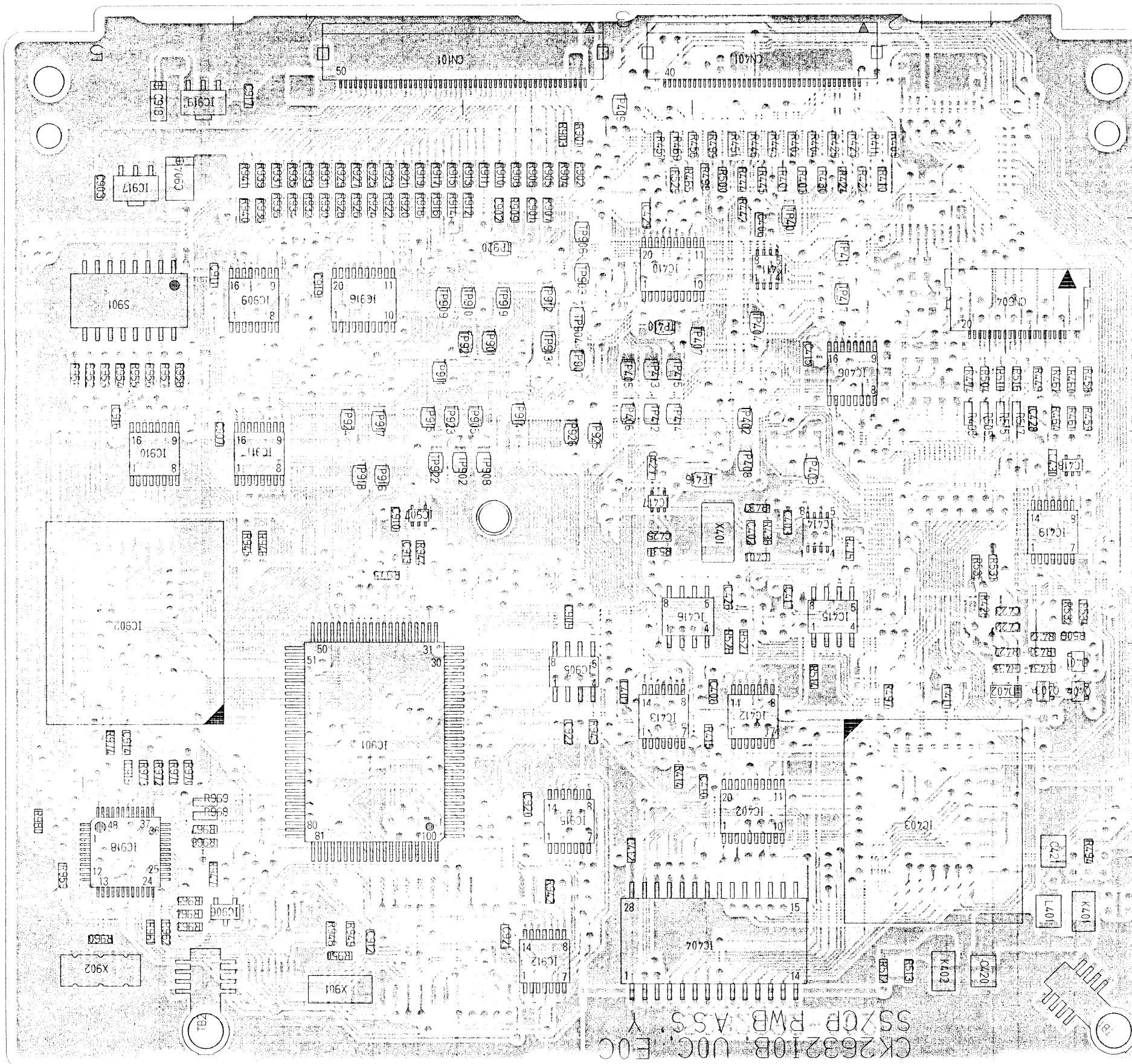

● **ADDRESS TABLE OF BOARD PARTS**
Each address may have an address error by one interval.

Side A-1C (Y axis, X axis)

IC401	B-1C	IC912	A-3E	R410	A-2A	R437	A-2C	R469	A-3A	R499	A-2A	R534
IC402	A-2D	IC915	A-3D	R411	A-2A	R438	B-2D	R470	B-2C	R500	A-2A	R535
IC403	A-1D	IC916	A-4B	R412	B-2C	R439	B-1B	R474	A-1B	R501	B-2D	R536
IC404	A-2E	IC917	A-5A	R413	B-2C	R440	B-1B	R475	A-2C	R502	B-1D	R537
IC405	B-1A	IC918	A-5E	R414	A-3D	R441	B-2B	R476	B-1B	R503	B-1D	R538
IC406	A-2B	IC919	A-5A	R415	A-2D	R442	A-2A	R477	B-1B	R504	A-1B	R539
IC410	A-3B	IC920	B-4B	R416	B-2C	R443	A-2A	R478	B-1B	R505	A-1B	R540
IC411	A-2B			R417	B-2C	R444	A-2A	R479	B-1B	R506	A-1D	R901
IC412	A-2D	Q401	B-2B	R418	B-2C	R445	A-2A	R480	B-1B	R507	B-2C	R902
IC413	A-3D	Q402	B-1D	R419	B-2C	R446	A-2A	R481	B-1B	R508	B-2C	R903
IC414	A-2C	Q403	A-1D	R420	B-2C	R448	B-2B	R482	B-1B	R509	B-2C	R904
IC415	A-2C	Q404	A-1D	R421	B-2C	R449	A-1B	R483	B-1B	R510	A-1B	R905
IC416	A-3C			R422	A-2A	R450	B-1B	R484	B-1B	R511	B-1D	R906
IC417	A-3C	D401	A-1D	R423	A-2A	R451	A-2A	R485	B-1B	R512	A-2E	R907
IC418	A-1C	D402	A-1D	R424	A-2A	R456	A-3A	R486	B-1B	R513	A-2E	R908
IC419	A-1C	D403	B-2B	R425	B-1D	R457	A-3A	R487	B-1B	R514	A-2D	R909
IC420	B-3B	D404	B-2B	R426	B-1D	R458	A-1B	R488	B-1B	R515	A-1B	R910
IC901	A-4D			R427	A-1D	R459	A-1B	R489	B-2B	R516	A-1B	R911
IC902	A-5D	R401	A-2A	R428	A-1C	R460	A-1B	R490	B-1B	R517	A-1B	R912
IC903	B-4E	R402	A-2A	R429	A-2A	R461	A-1B	R491	B-2B	R526	B-2D	R913
IC904	B-4E	R403	A-2A	R430	A-2A	R462	A-1B	R492	B-2B	R527	A-2D	R914
IC905	A-3D	R404	A-2A	R431	B-1D	R463	B-2A	R493	B-2B	R528	A-2D	R915
IC906	A-5E	R405	B-1D	R432	A-1D	R464	A-1B	R494	A-1E	R529	A-3A	R916
IC907	A-4C	R406	B-1D	R433	A-1D	R465	A-3A	R495	A-1B	R530	B-1C	R917
IC909	A-4B	R407	B-2D	R434	A-1D	R466	B-2A	R496	B-1D	R531	A-3C	R918
IC910	A-5C	R408	B-2D	R435	A-1D	R467	B-2B	R497	A-2D	R532	A-1C	R919
IC911	A-4C	R409	A-2A	R436	A-2C	R468	B-1B	R498	A-2A	R533	A-1C	R920

– SIDE B –

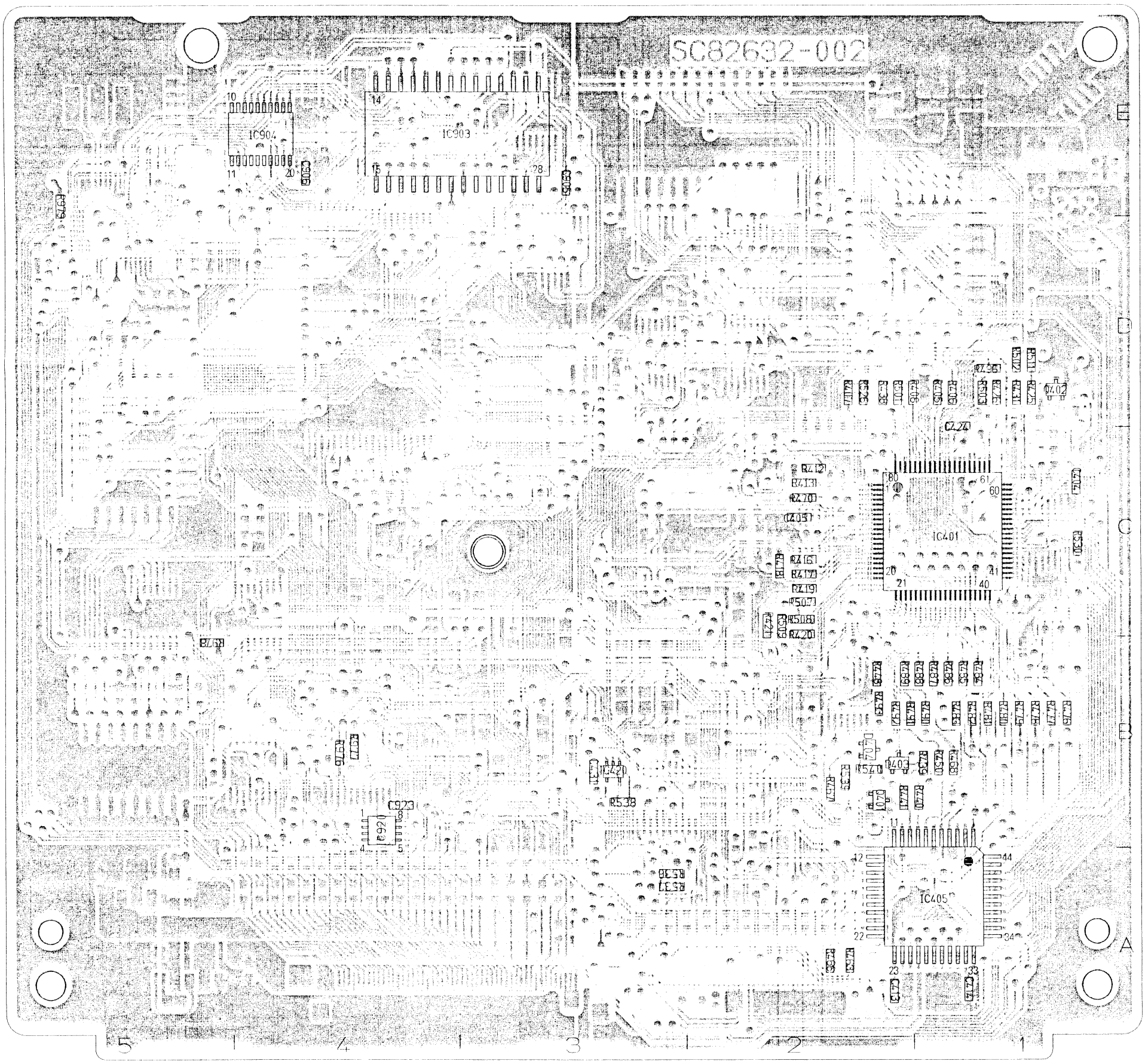

A	R534	A-1C	R921	A-4A	R948	A-4E	R975	A-4C	C425	A-3C	C922	A-3D	TP906	A-3B	X401	A-2C
A	R535	A-1C	R922	A-4A	R949	A-4E	R976	B-4B	C426	A-2C	C923	B-4B	TP907	A-3B	X901	A-4E
D	R536	B-3A	R923	A-4A	R950	A-4E	R977	B-4B	C427	A-3C			TP908	A-3C	X902	A-5E
D	R537	B-3A	R924	A-4A	R951	A-5B	R978	B-5C	C428	A-1B	L401	A-1E	TP909	A-4B		
D	R538	B-3B	R925	A-4A	R952	A-5B	R979	B-5E	C429	A-3B			TP910	A-3B	K401	A-1E
B	R539	B-2B	R926	A-4A	R953	A-5B	R980	A-5D	C430	A-1C	TP401	A-2B	TP911	A-4B	K402	A-1E
B	R540	B-2B	R927	A-4A	R954	A-5B			C431	B-3B	TP402	A-2B	TP912	A-3B		
D	R901	A-3A	R928	A-4A	R955	A-5B	C401	A-2C	C901	A-3A	TP403	A-2C	TP913	A-3B	TB1	A-1F
C	R902	A-3A	R929	A-4A	R956	A-5B	C402	A-2C	C902	A-3A	TP404	A-2B	TP914	A-3B	TB2	A-5F
C	R903	A-3A	R930	A-4A	R957	A-5B	C403	A-2C	C903	A-5A	TP405	A-3B	TP915	A-4B		
C	R904	A-3A	R931	A-4A	R958	A-5B	C404	B-1C	C904	A-5A	TP406	A-3B	TP916	A-4C		
B	R905	A-3A	R932	A-4A	R959	A-5E	C405	B-2C	C905	B-3E	TP407	A-2B	TP917	A-4B		
D	R906	A-3A	R933	A-4A	R960	A-5E	C406	A-2B	C906	B-4E	TP408	A-2C	TP918	A-4C		
E	R907	A-3A	R934	A-4A	R961	A-5E	C407	A-3D	C907	A-5C	TP409	A-3A	TP919	A-3B		
E	R908	A-3A	R935	A-4A	R962	A-5E	C408	A-2D	C909	A-3C	TP410	A-3B	TP920	A-3B		
D	R909	A-3A	R936	A-4A	R963	A-5E	C410	A-2D	C910	A-4C	TP411	A-2B	TP921	A-3B		
B	R910	A-3A	R937	A-4A	R964	A-5E	C411	A-1D	C911	A-5B	TP412	A-3B	TP922	A-4C		
B	R911	A-3A	R938	A-4A	R965	A-5E	C412	A-3E	C912	A-4E	TP413	A-3B	TP923	A-4B		
B	R912	A-3A	R939	A-4A	R966	A-5E	C413	B-2A	C913	A-4C	TP414	A-3B	TP924	A-4B		
D	R913	A-3A	R940	A-4A	R967	A-5D	C414	B-1A	C914	A-5D	TP415	A-3B	TP925	A-3C		
D	R914	A-4A	R941	A-4A	R968	A-5D	C415	A-2B	C915	A-5D	TP416	A-2C	TP926	A-3C		
D	R915	A-4A	R942	A-3E	R969	A-5D	C417	A-2C	C916	A-5B	TP417	A-2B				
A	R916	A-4A	R943	A-3D	R970	A-5D	C420	A-1E	C917	A-4A	TP901	A-3B	CN101	A-4A		
C	R917	A-4A	R944	A-4C	R971	A-5D	C421	A-1E	C918	A-5A	TP902	A-4C	CN401	A-2A		
C	R918	A-4A	R945	A-4C	R972	A-5D	C422	A-1D	C919	A-4B	TP903	A-3B	CN604	A-1B		
C	R919	A-4A	R946	A-4C	R973	A-5D	C423	A-1C	C920	A-3D	TP904	A-3B				
C	R920	A-4A	R947	A-5E	R974	A-5D	C424	B-1D	C921	A-3E	TP905	A-3B	S901	A-5B		

4.15 MT SCHEMATIC DIAGRAM 3 4

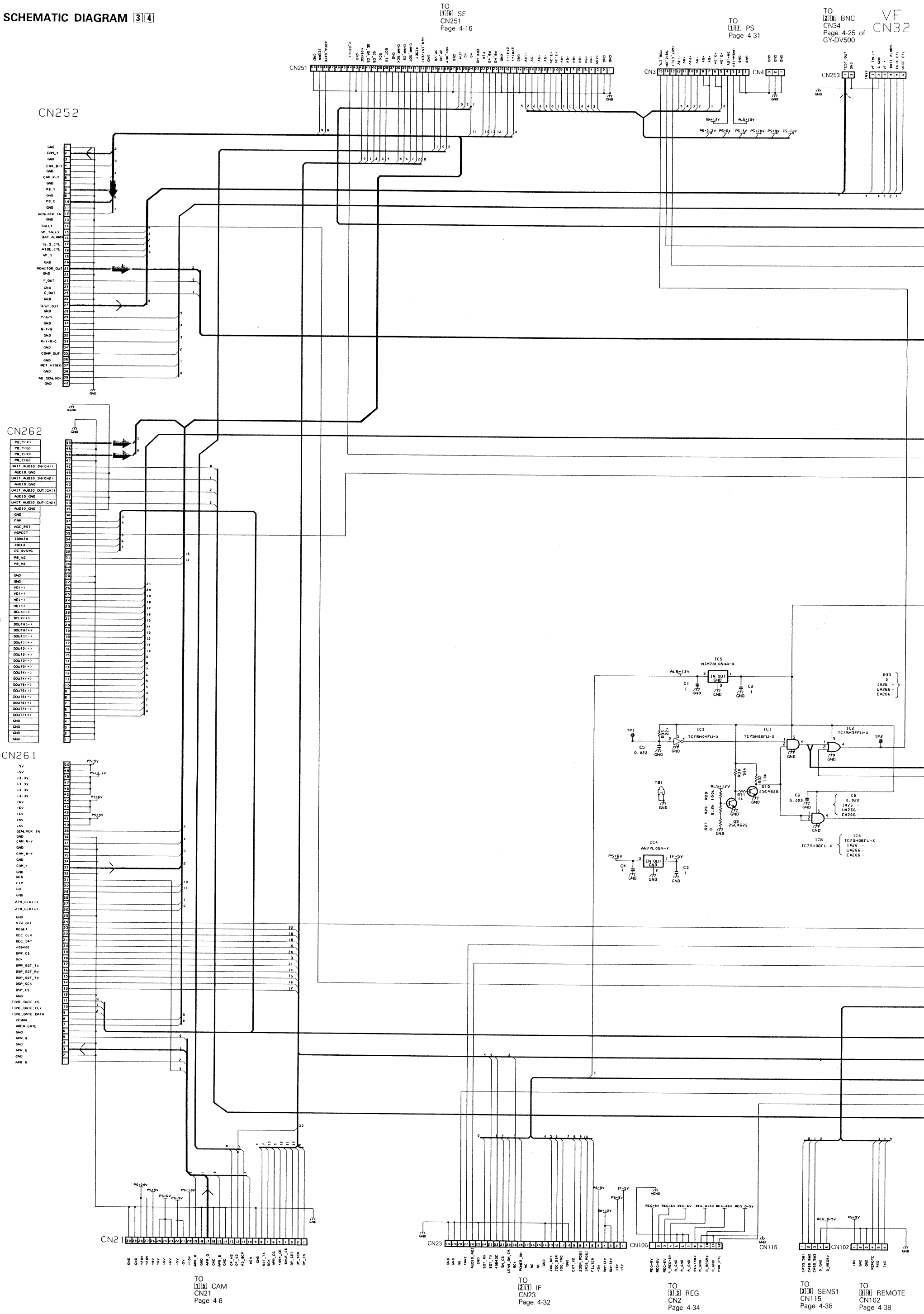

TO
2 8 BNC
CN34
Page 4-25 of
GY-DV500

VF
CN32

CN253

TO
1 8 IF2
CN61
Page 4-32

CN61

CN62

NC

CN104

TO
3 9 AU JUNK
CN104
Page 4-36

CN103

TO
4 2 CONNECT
CN103
Page 4-38

CN401

TO
3 1 SS/CP
CN401
Page 4-20

CN101

TO
3 1 SS/CP
CN101
Page 4-19

IC2
TC7SH32FU-X

IC6
TC7SH08FU-X

R33
0
I:01-025
U:0266 -
E:0266 -

C6
0.022
I:026 -
U:0266 -
E:0266 -

I:01-025
U:01-0265
E:01-0265

CN102

TO
3 6 SENS1
CN115
Page 4-38

TO
3 8 REMOTE
CN102
Page 4-38

CN201

TO
3 2 AUDIO/LCD
CN201
Page 4-26

CN601

TO
3 2 AUDIO/LCD
CN601
Page 4-25

SC92688

4.16 MT CIRCUIT BOARD

— SIDE A —

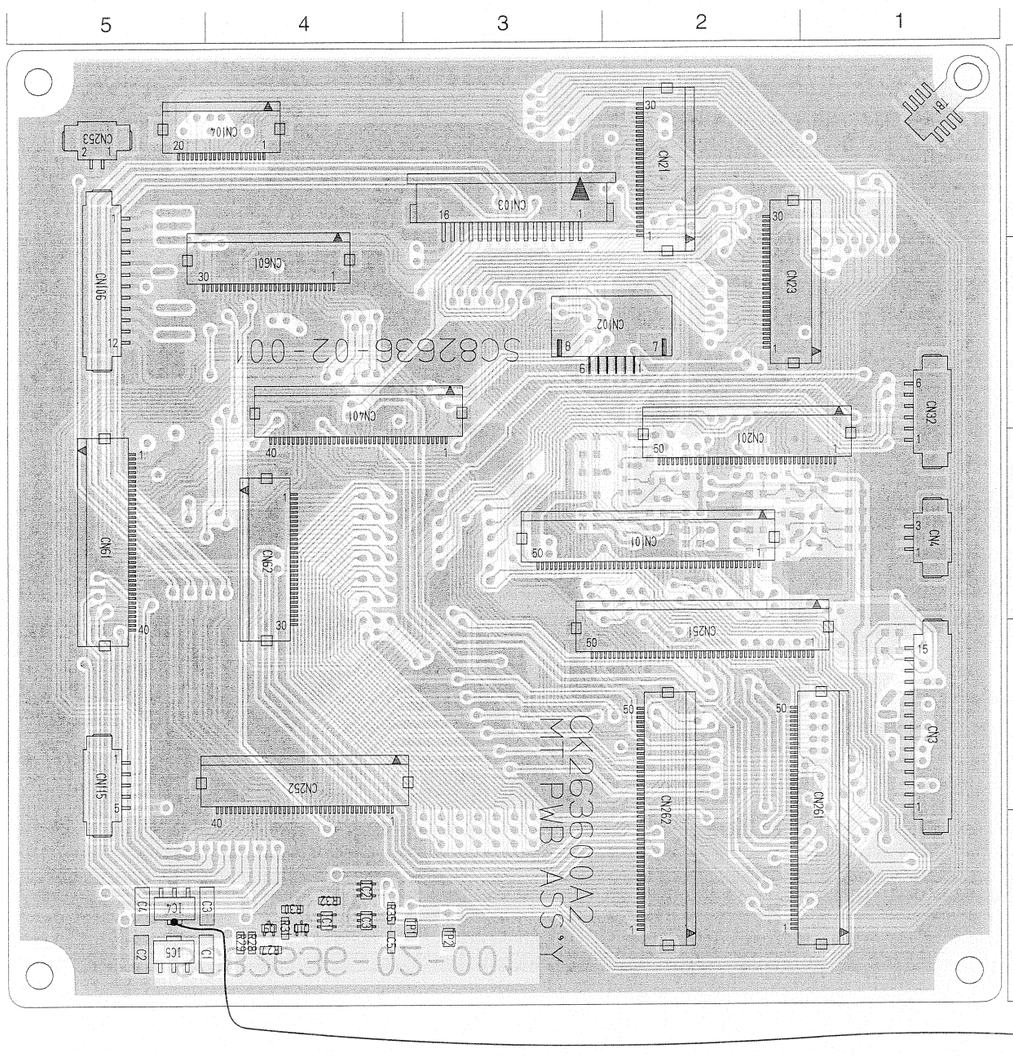

— SIDE B —

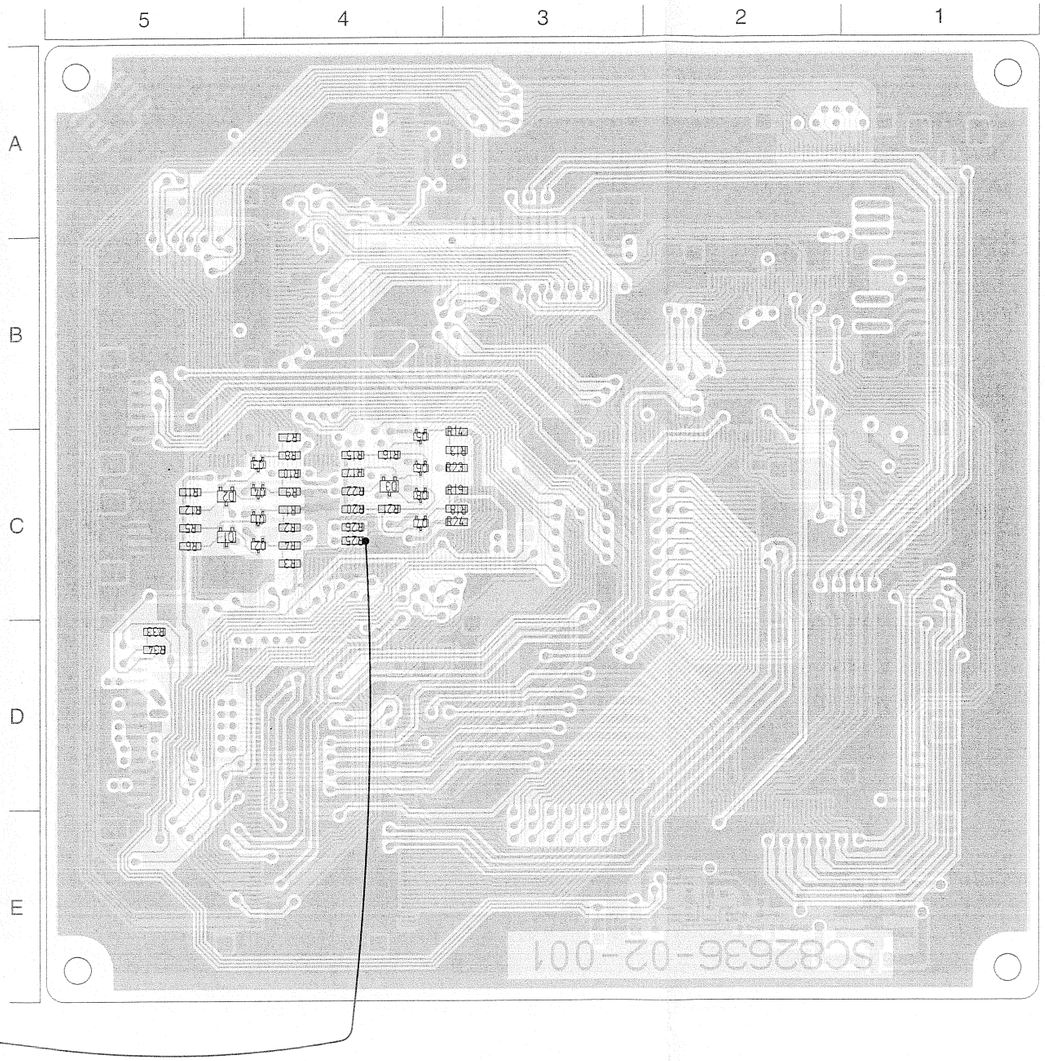

● **ADDRESS TABLE OF BOARD PARTS**

Each address may have an address error by one interval.

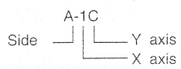

IC1	A-4E	D3	B-2C	R18	B-3C	C1	A-5E	CN102	A-3B
IC2	A-4E			R19	B-3C	C2	A-5E	CN103	A-3A
IC3	A-4E	R1	B-2C	R20	B-2C	C3	A-5E	CN104	A-5A
IC4	A-5E	R2	B-2C	R21	B-2C	C4	A-5E	CN106	A-5B
IC5	A-5E	R3	B-2C	R22	B-2C	C5	A-4E	CN115	A-5D
		R4	B-2C	R23	B-3C			CN201	A-2B
Q1	B-2C	R5	B-1C	R24	B-3C	TP1	A-4E	CN251	A-2C
Q2	B-2C	R6	B-1C	R25	B-2C	TP2	A-3E	CN252	A-4D
Q3	B-2C	R7	B-2B	R26	B-2C			CN253	A-5A
Q4	B-2C	R8	B-2C	R27	A-4E	TB1	A-1A	CN261	A-1D
Q5	B-2B	R9	B-2C	R28	A-4E			CN262	A-2D
Q6	B-2C	R10	B-2C	R29	A-4E	CN3	A-1D	CN401	A-4B
Q7	B-2C	R11	B-1C	R30	A-4E	CN4	A-1C	CN601	A-4B
Q8	B-2C	R12	B-1C	R31	A-4E	CN21	A-2A		
Q9	A-4E	R13	B-3C	R32	A-4E	CN23	A-2B		
Q10	A-4E	R14	B-3B	R33	B-1C	CN32	A-1B		
		R15	B-2C	R34	B-1D	CN61	A-5C		
D1	B-1C	R16	B-2C	R35	A-4E	CN62	A-4C		
D2	B-1C	R17	B-2C			CN101	A-2C		

4-23

— INNER PATTERN (SIDE A) —

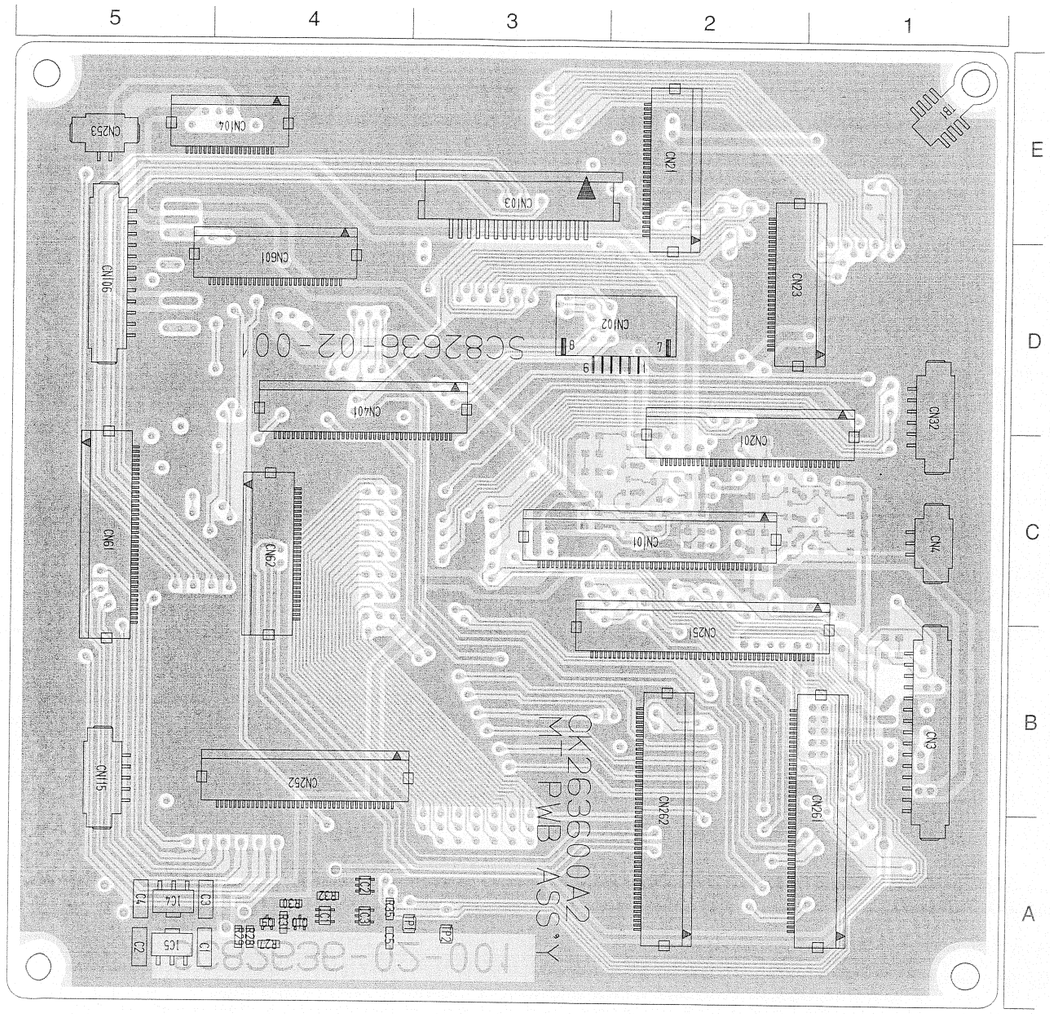

— INNER PATTERN (SIDE B) —

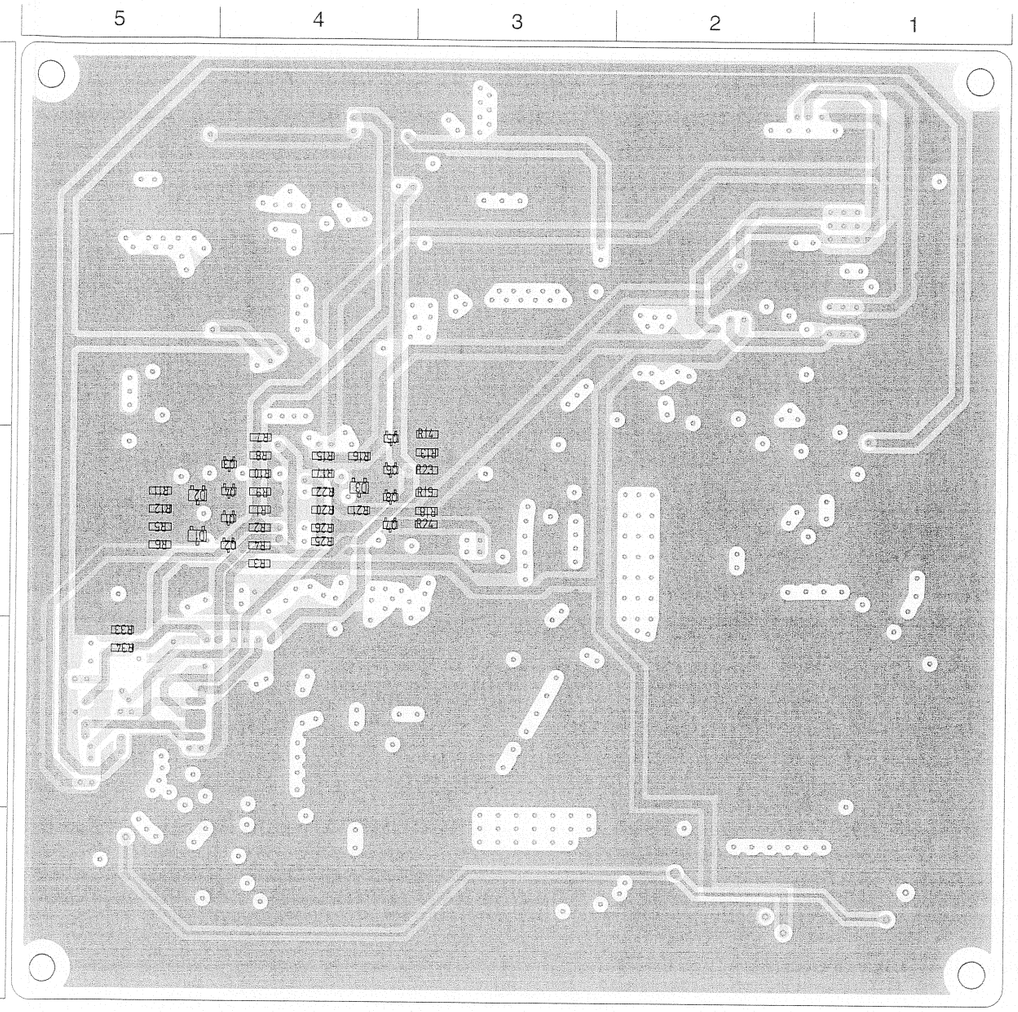

4-24

4.17 AUDIO/LCD SCHEMATIC DIAGRAM (1/2) 3 2

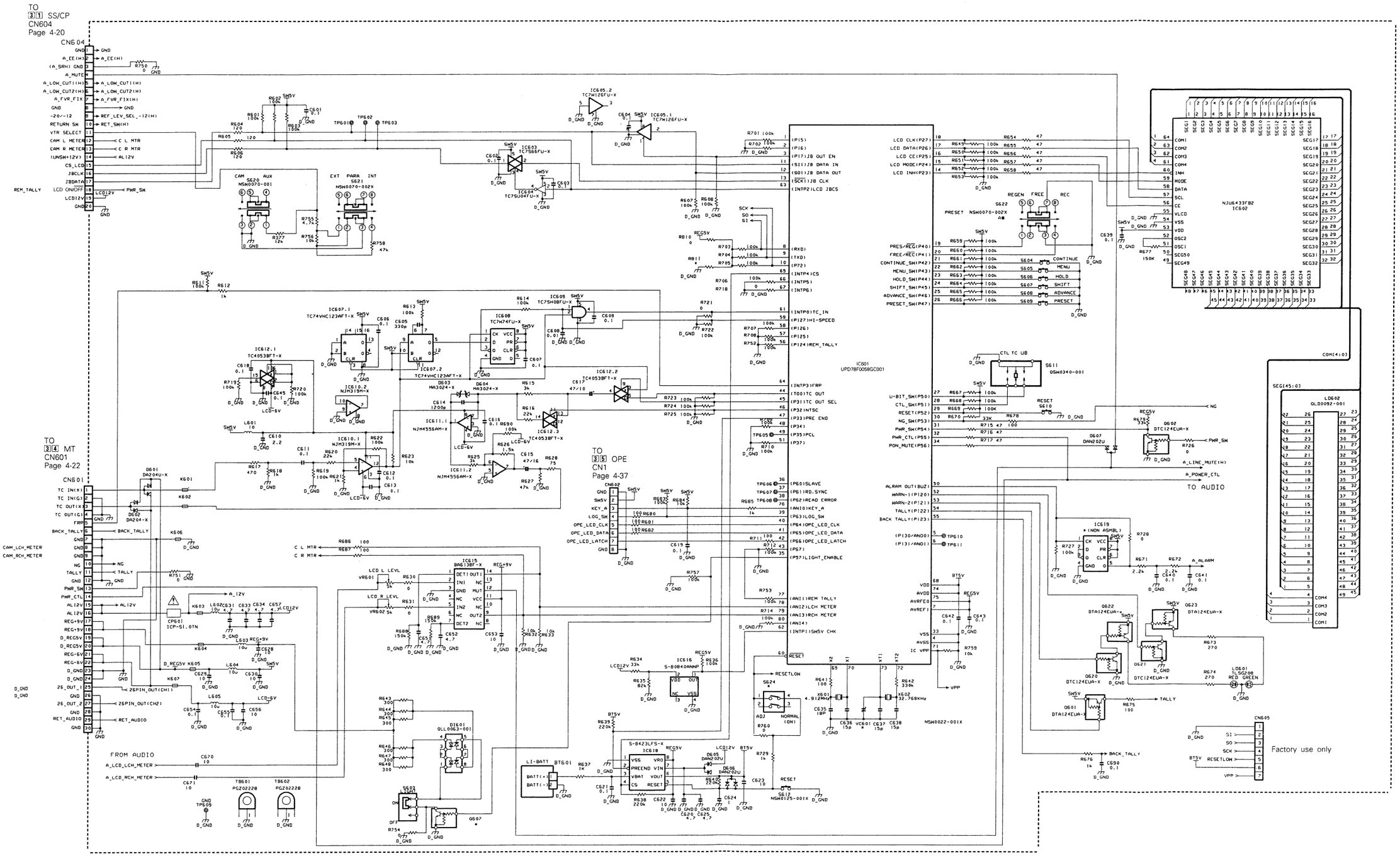

• AUDIO/LCD SCHEMATIC DIAGRAM (2/2) 3 2

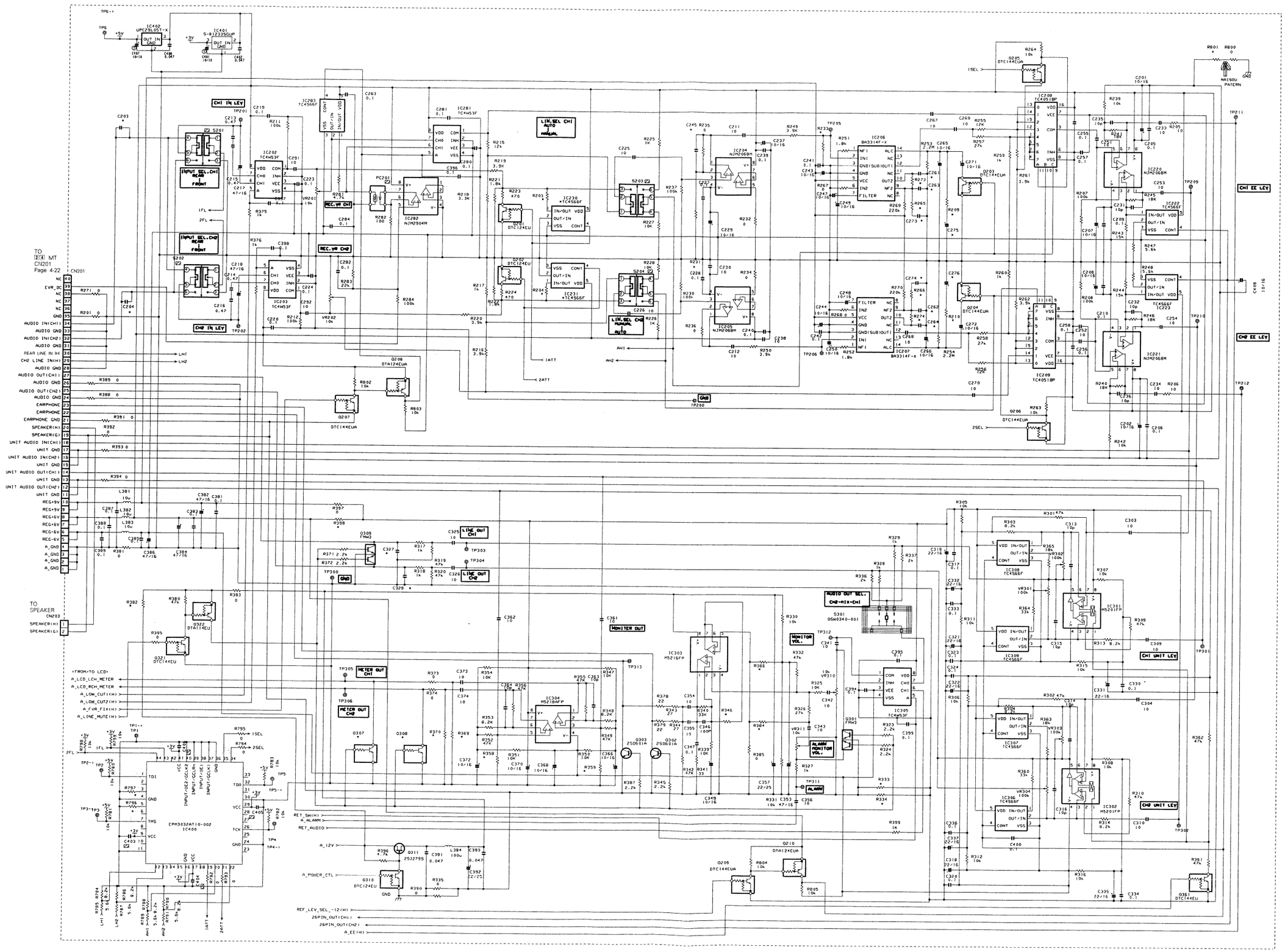

SC92689

4.18 AUDIO/LCD CIRCUIT BOARD

— INNER PATTERN (SIDE B) —

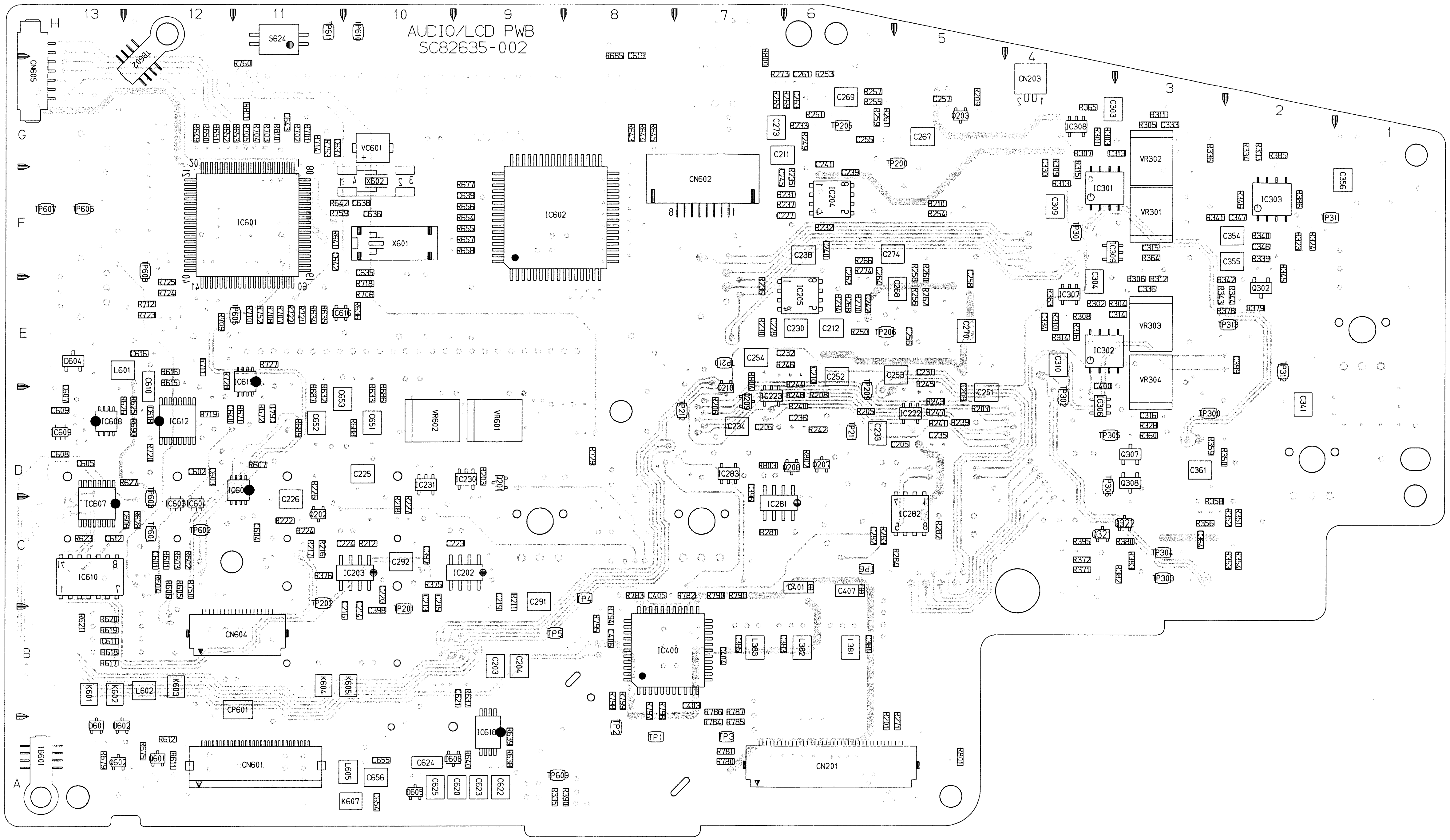

— SIDE A —

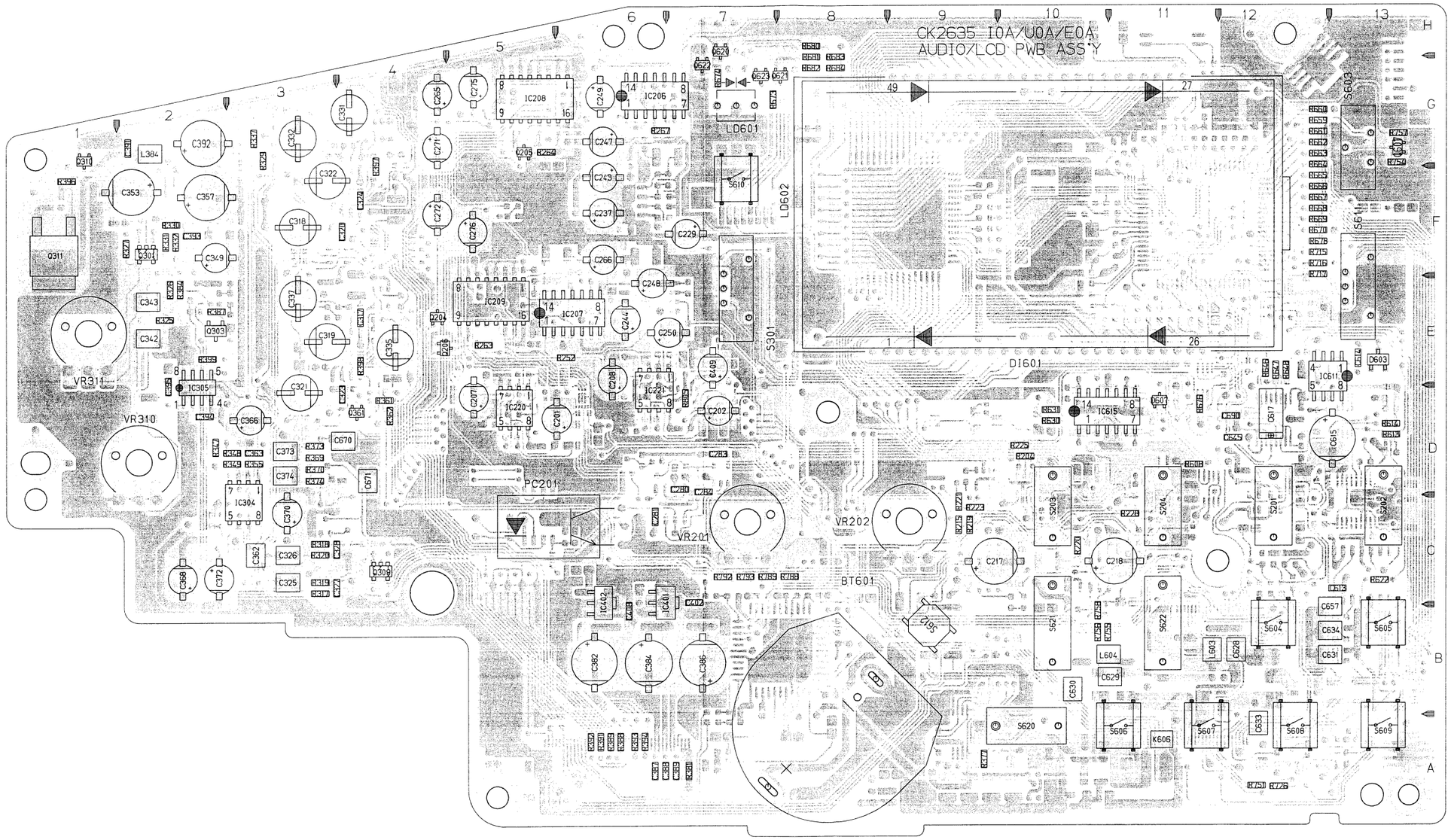

● **ADDRESS TABLE OF BOARD PARTS**

Each address may have an address error by one interval.

Side A-1C — Y axis, X axis

IC202	B-9C	IC304	A-3D	IC615	A-10E	Q309	A-4C	D607	A-11E	R222	B-11C	R244	B-6E	R264	A-5G	R307	B-4G	R329	A-3G	R350	B-3D	R374	A-3D	R394	A-6A	R617	B-13B	R639	B-9A	R659	A-12G	R679	B-13A	R709	B-12E
IC203	B-10C	IC305	A-2E	IC616	B-11E	Q310	A-1G			R223	A-9D	R245	B-5E	R265	B-7G	R308	B-4E	R330	A-2F	R351	B-2C	R375	B-10C	R395	B-4C	R618	B-13B	R640	B-9A	R660	A-12G	R680	A-8H	R710	B-11E
IC204	B-6G	IC306	B-4E	IC618	B-9A	Q311	A-1F	R201	B-6B	R224	B-11C	R246	B-6E	R266	B-6F	R309	B-4G	R331	A-2F	R352	B-2C	R376	B-11C	R396	A-1G	R619	B-13B	R641	B-11F	R661	A-12G	R681	A-8H	R711	B-12E
IC205	B-6F	IC307	B-4F	IC619	B-11E	Q321	B-4C	R203	B-9D	R225	A-10D	R247	B-5D	R267	A-6G	R310	B-4E	R332	A-2F	R353	B-2C	R377	A-9A	R397	A-4G	R620	B-13C	R642	B-11F	R662	A-12G	R682	A-8H	R712	B-12F
IC206	A-6H	IC308	B-4G			Q322	B-3C	R204	A-10D	R226	B-11D	R248	B-6E	R268	B-6F	R311	B-3G	R333	B-2G	R354	B-2C	R378	B-2E	R398	A-4E	R621	B-13C	R643	B-8G	R663	A-12G	R683	A-8H	R714	B-11G
IC207	A-6E	IC309	B-4F	Q201	B-9D	Q361	A-4E	R205	B-6E	R227	B-10D	R249	B-6G	R269	B-6G	R312	B-3F	R334	B-2G	R355	A-3D	R379	B-2F	R399	A-2E	R622	A-13C	R644	B-8G	R664	A-12G	R684	A-8H	R715	A-12F
IC208	A-6H	IC400	B-8B	Q202	B-11D	Q601	B-12A	R206	B-7E	R228	A-11D	R250	B-6E	R270	B-6F	R313	B-4G	R335	B-9A	R356	B-3C	R380	B-3C	R601	B-12C	R623	B-13C	R645	B-8G	R665	A-12G	R685	B-8H	R716	A-12F
IC209	A-5F	IC401	A-6C	Q203	B-5G	Q602	B-13A	R207	B-5E	R230	B-7E	R251	B-6G	R271	B-5B	R314	B-4E	R336	B-3G	R358	B-3D	R381	A-7A	R602	B-12C	R625	B-12E	R646	A-12E	R666	A-12G	R686	B-10E	R717	A-12F
IC220	A-5E	IC402	A-6C	Q204	A-4E	Q607	A-13G	R208	B-6E	R231	B-6G	R252	A-6E	R273	B-7H	R315	B-4G	R337	A-3G	R359	B-3D	R382	B-3C	R603	B-12C	R626	B-12E	R647	A-12E	R667	A-12G	R687	B-11E	R718	B-10F
IC221	A-7E	IC601	B-11F	Q205	A-5G	Q620	A-7H	R209	B-5G	R232	B-6F	R253	B-6H	R274	B-6F	R316	B-4E	R339	B-2F	R360	B-3D	R383	B-3C	R604	B-12C	R627	B-12D	R648	A-12E	R668	A-12F	R688	B-10D	R719	B-12D
IC222	B-5D	IC602	B-9F	Q206	A-4E	Q621	A-8H	R210	B-5F	R233	B-6G	R254	B-5F	R281	B-7C	R317	A-3C	R340	B-2F	R361	A-4E	R384	A-2F	R605	B-12C	R628	B-12C	R649	B-12G	R669	A-12F	R689	B-11D	R720	B-12D
IC223	B-7E	IC603	B-12D	Q207	B-6D	Q622	A-7H	R211	B-9C	R234	B-6F	R255	B-6G	R282	B-5C	R318	A-3C	R341	B-3F	R362	A-4D	R385	B-2G	R606	B-12C	R630	A-10D	R650	B-12G	R670	A-12F	R690	B-12D	R721	B-11E
IC230	B-9D	IC604	B-12D	Q208	B-6D	Q623	A-7H	R212	B-10C	R235	B-6G	R256	B-5F	R283	B-6C	R319	A-3C	R342	B-2F	R363	B-4F	R386	B-2G	R607	B-11D	R631	A-10E	R651	B-12G	R671	B-11D	R701	B-11G	R722	B-11E
IC231	B-10D	IC605	B-11D	Q209	B-7E			R215	A-9C	R236	B-7F	R257	B-6H	R284	B-5C	R320	A-3C	R343	B-3F	R364	B-3F	R387	A-2F	R608	A-11D	R632	B-11E	R652	B-12G	R672	B-11D	R702	B-11G	R723	B-12E
IC281	B-7D	IC607	B-13D	Q210	B-7E	D601	B-13B	R216	B-11C	R237	B-6F	R258	B-5F	R301	B-4G	R323	B-2F	R344	B-2F	R365	B-4G	R388	A-6A	R611	B-12A	R633	B-10E	R653	B-11G	R673	A-7G	R703	B-11G	R724	B-12F
IC282	B-5D	IC608	B-13D	Q301	A-2F	D602	B-13B	R217	B-11C	R239	B-5D	R259	B-6G	R302	B-4F	R324	B-2F	R345	B-2F	R369	A-3D	R389	A-6A	R612	B-12A	R634	B-11E	R654	B-9F	R674	A-7H	R704	B-11G	R725	B-12F
IC283	B-7D	IC609	B-13D	Q302	B-2F	D603	A-13E	R218	B-10D	R240	B-6E	R260	B-5F	R303	B-4G	R325	A-2E	R346	B-2F	R370	A-3D	R390	B-8A	R613	A-13D	R635	B-11E	R655	B-9F	R675	B-12A	R705	B-11G	R726	A-12A
IC301	B-4G	IC610	B-13C	Q303	A-2E	D604	B-13E	R219	A-9C	R241	B-5D	R261	B-6G	R304	B-3F	R326	A-2F	R347	A-2D	R371	B-4C	R391	A-6A	R614	A-13D	R636	B-10E	R656	B-9F	R676	A-11E	R706	B-10F	R727	B-11E
IC302	B-4E	IC611	A-12E	Q307	B-3D	D605	B-10A	R220	A-10C	R242	B-6D	R262	B-5F	R305	B-3G	R327	A-2F	R348	A-3D	R372	B-4C	R392	A-6A	R615	B-12E	R637	B-9B	R657	B-9F	R677	B-9G	R707	B-11E	R728	B-12E
IC303	B-2G	IC612	B-12D	Q308	B-3D	D606	B-9A	R221	A-9D	R243	B-5E	R263	A-5E	R306	B-3F	R328	B-3D	R349	A-3D	R373	A-3D	R393	A-6A	R616	B-12E	R638	B-9A	R658	B-9F	R678	A-12F	R708	B-11E	R729	B-8D

4-28

— SIDE B —

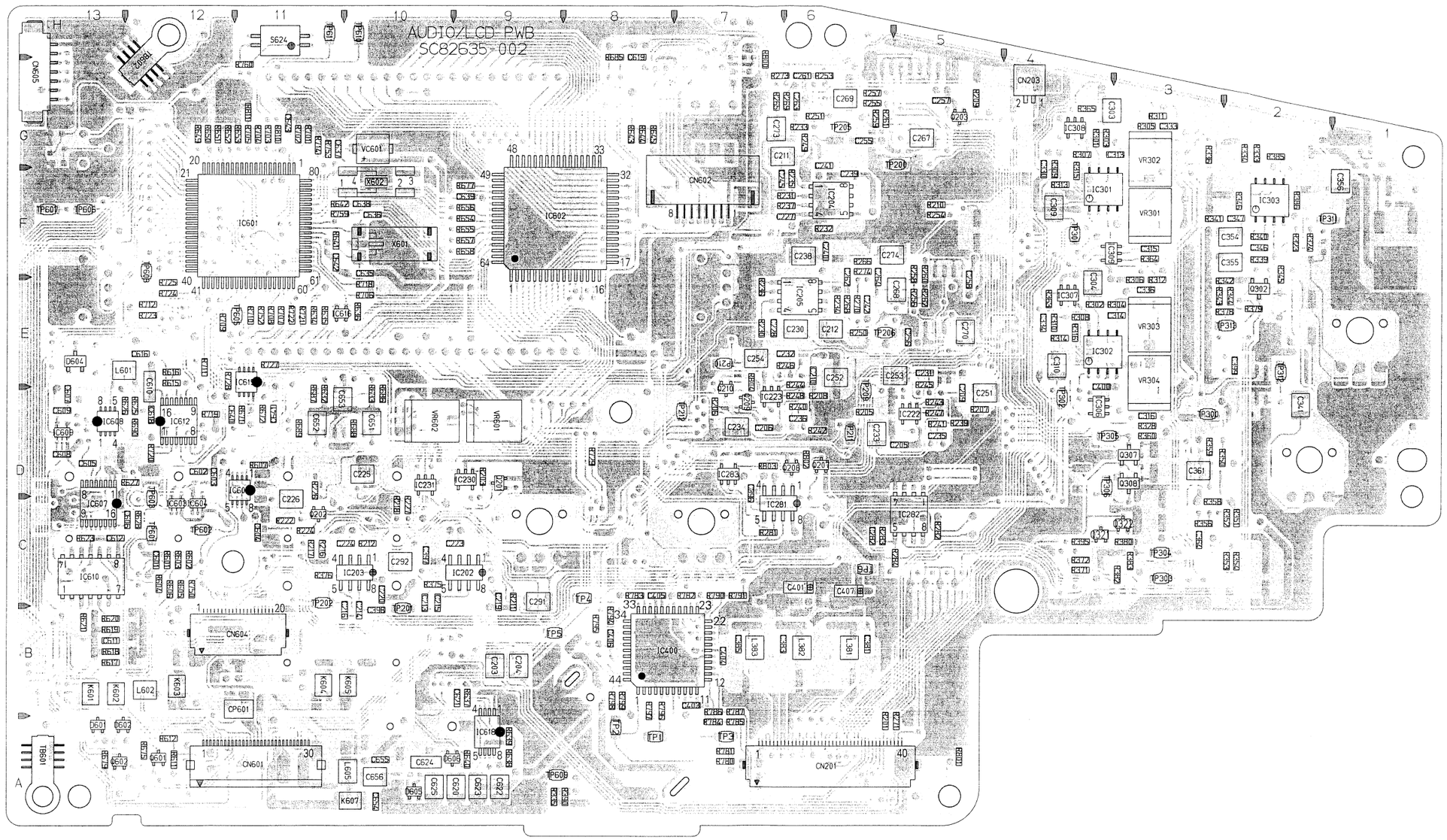

R750	B-12C	R789	A-7C	VR201	A-7C	C210	B-6E	C232	B-6E	C253	B-5E	C275	A-5H	C320	A-4F	C346	B-2F	C383	B-6B	C404	B-7B	C615	A-13D	C638	B-10F	L381	B-6B	TP206	B-6E	TP607	B-13F	S607	A-11B	K601	B-13B
R751	A-12A	R790	B-7C	VR202	A-9C	C211	B-7G	C233	B-6D	C254	B-7E	C276	A-5F	C321	A-3E	C347	B-2F	C384	A-6B	C405	B-8C	C616	B-12E	C639	B-9G	L382	B-6B	TP209	B-6E	TP608	B-12F	S608	A-12B	K602	B-13B
R752	B-11E	R791	B-7C	VR301	B-3F	C212	B-6E	C234	B-7D	C255	B-6G	C280	A-7D	C322	A-3G	C349	A-2F	C385	B-7B	C406	B-8B	C617	A-12D	C640	B-12D	L383	B-7B	TP210	B-7E	TP609	B-9A	S609	A-13B	K603	B-12B
R753	B-11G	R792	A-7C	VR302	B-3G	C213	B-10C	C235	B-5D	C256	B-5E	C281	A-6C	C323	A-4E	C353	A-2G	C386	A-7B	C407	B-6C	C618	B-12D	C641	B-11D	L384	A-2G	TP211	B-6D	TP610	B-10H	S610	A-7G	K604	B-11B
R754	A-13G	R793	A-7C	VR303	B-3E	C214	B-10C	C236	B-6D	C257	B-5G	C282	B-6C	C324	A-4G	C354	B-2F	C387	A-6A	C408	A-6C	C619	B-8H	C642	B-11F	L601	B-13E	TP212	B-7E	TP611	B-11H	S611	A-13F	K605	B-10B
R755	A-11B	R794	B-8C	VR304	B-3E	C215	B-10C	C237	A-6F	C258	B-5F	C283	A-7D	C325	A-3C	C355	B-2F	C388	A-6A	C409	A-7E	C620	B-9A	C643	B-11G	L602	B-12B	TP300	B-3D			S612	A-9B	K606	A-11A
R756	A-10B	R795	B-8C	VR310	A-2D	C216	B-10C	C238	B-6F	C261	B-6H	C284	A-7D	C326	A-3C	C356	B-1G	C389	A-7A	C601	B-12C	C621	B-9B	C645	A-12D	L603	A-11B	TP301	B-4F	TB601	B-13A	S620	A-10B	K607	B-10A
R757	A-13G	R796	B-8B	VR311	A-1E	C217	A-9C	C239	B-6G	C262	B-6F	C291	B-9C	C327	A-4C	C357	A-2G	C391	A-2G	C602	B-12D	C622	B-9A	C651	B-10D	L604	A-11B	TP302	B-4E	TB602	B-12H	S621	A-10C		
R758	A-10C	R797	B-8B	VR601	B-9D	C218	A-11C	C240	B-6F	C263	B-6G	C292	B-10C	C328	A-4C	C361	B-3D	C392	A-2G	C603	B-12D	C623	B-9A	C652	B-11D	L605	B-10A	TP303	B-3C			S622	A-11C	LD601	A-7G
R759	B-11F	R798	B-8B	VR602	B-10D	C219	B-9C	C241	B-6G	C264	B-6F	C303	B-4G	C330	B-4G	C362	A-3C	C393	A-2F	C604	B-11C	C624	B-10A	C653	B-11E			TP304	B-3C	CP601	B-11B	S624	B-11H	LD602	A-10F
R760	B-11H	R799	B-8B			C220	B-10C	C242	B-6F	C265	A-4H	C304	B-4F	C331	A-4G	C363	A-3D	C394	A-2D	C605	B-13D	C625	B-10A	C654	B-10A	TP1	B-8A	TP305	B-4D						
R780	B-7A	R800	B-7H	C201	A-6D	C223	B-9C	C243	A-6G	C266	A-6F	C309	B-4F	C332	A-3G	C364	B-3C	C395	A-2E	C606	B-12C	C628	A-12B	C655	B-10A	TP2	B-8A	TP306	B-4D	S201	A-12D	X601	B-10F	BT601	A-7A
R781	B-7A	R801	B-5A	C202	A-7E	C224	B-10C	C244	A-6E	C267	B-5G	C310	B-4E	C333	B-3G	C366	A-3D	C396	B-7D	C607	B-13E	C629	A-11B	C656	B-10A	TP3	B-7A	TP311	B-2F	S202	A-13D	X602	B-10G		
R782	B-7C	R802	B-6D	C203	B-9B	C225	B-10D	C245	B-7G	C268	B-5F	C313	B-3G	C334	B-4E	C368	A-2C	C397	B-10C	C608	B-13D	C630	A-10B	C657	A 13C	TP4	B-8C	TP312	B-2E	S203	A-10D			D1601	A-10F
R783	B-8C	R803	B-7D	C204	B-9B	C226	B-11D	C247	A-6G	C269	B-6G	C314	B-3E	C335	A-4E	C370	A-3D	C398	B-10C	C609	B-13E	C631	A-13B	C670	A-4D	TP5	B-9B	TP313	B-2E	S204	A-11D	CN201	B-6A		
R784	B-7B	R804	B-7E	C205	B-5D	C227	B-6F	C248	A-6F	C270	B-5E	C315	B-3F	C336	B-3F	C372	A-2C	C399	B-2E	C610	B-12E	C633	A-12B	C671	A-4D	TP6	B-6C	TP601	B-12C	S301	A-7F	CN203	B-4H	PC201	A-5C
R785	B-7B	R805	A-7E	C206	B-7D	C228	B-7E	C249	A-6H	C271	A-4G	C316	B-3D	C337	A-3F	C373	A-3D	C400	B-4E	C611	B-13B	C634	A-13B	C690	A-12D	TP200	B-5G	TP602	B-12C	S603	A-13G	CN601	B-11A		
R786	B-7B	R810	B-11G	C207	A-5E	C229	A-7F	C250	A-7E	C272	A-4F	C317	A-4E	C341	B-2E	C374	A-3D	C401	B-6C	C612	B-13C	C635	B-10F			TP201	B-10C	TP603	B-12D	S604	A-12C	CN602	B-7G		
R787	B-7B	R811	B-11G	C208	A-6E	C230	B-6E	C251	B-5E	C273	B-7G	C318	A-3F	C342	A-2E	C381	B-6B	C402	A-7C	C613	A-13C	C636	B-10F	VC601	B-10G	TP202	B-11C	TP605	B-11E	S605	A-13C	CN604	B-11B		
R788	A-8C			C209	B-5E	C231	B-5E	C252	B-6E	C274	B-6F	C319	A-3E	C343	A-2F	C382	A-6B	C403	B-7B	C614	A-13E	C637	B-11G			TP205	B-6G	TP606	B-13F	S606	A-11B	CN605	B-13H		

4-29

– INNER PATTERN (SIDE A) –

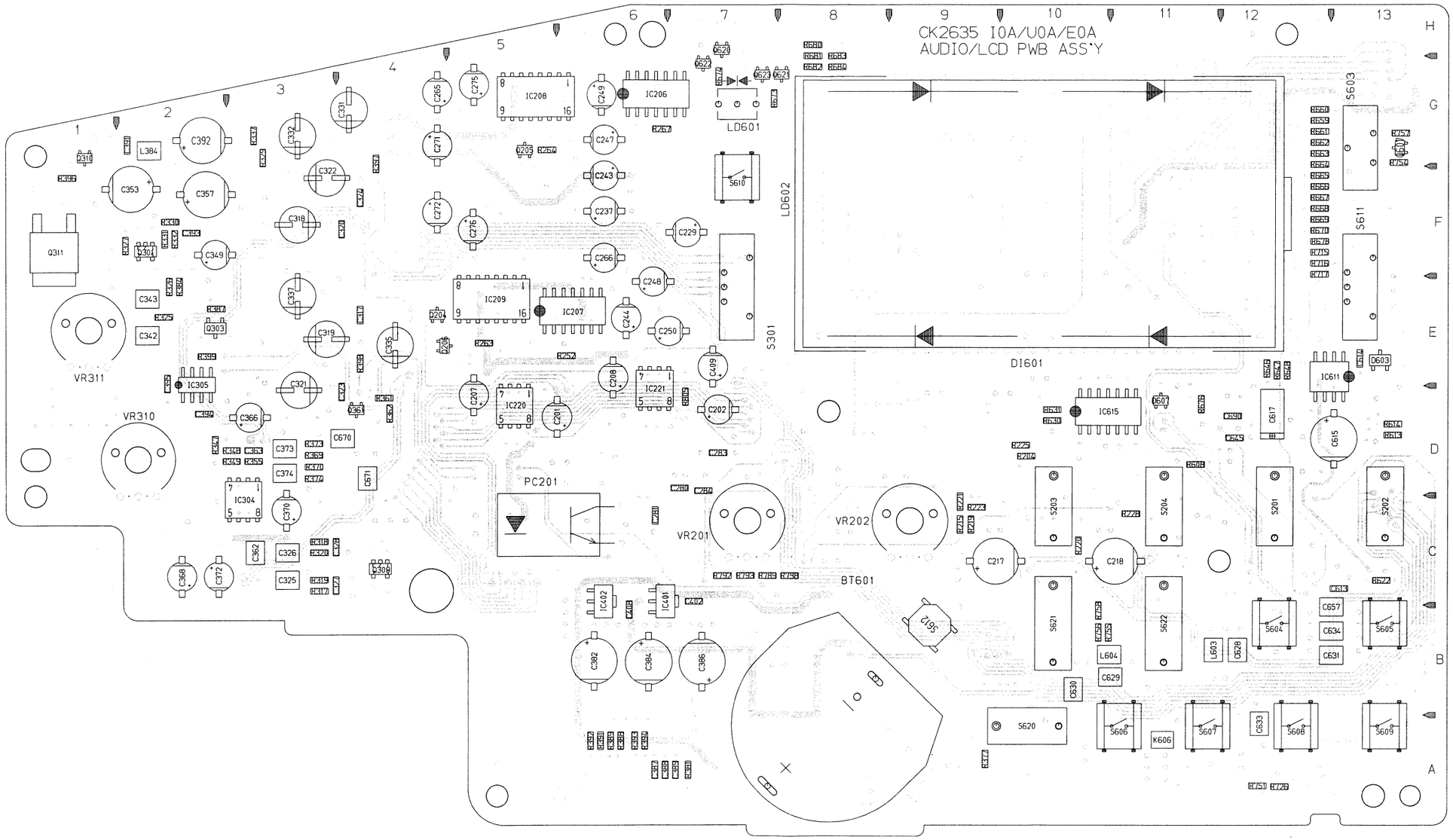

4.19 PS SCHEMATIC DIAGRAM 1 7

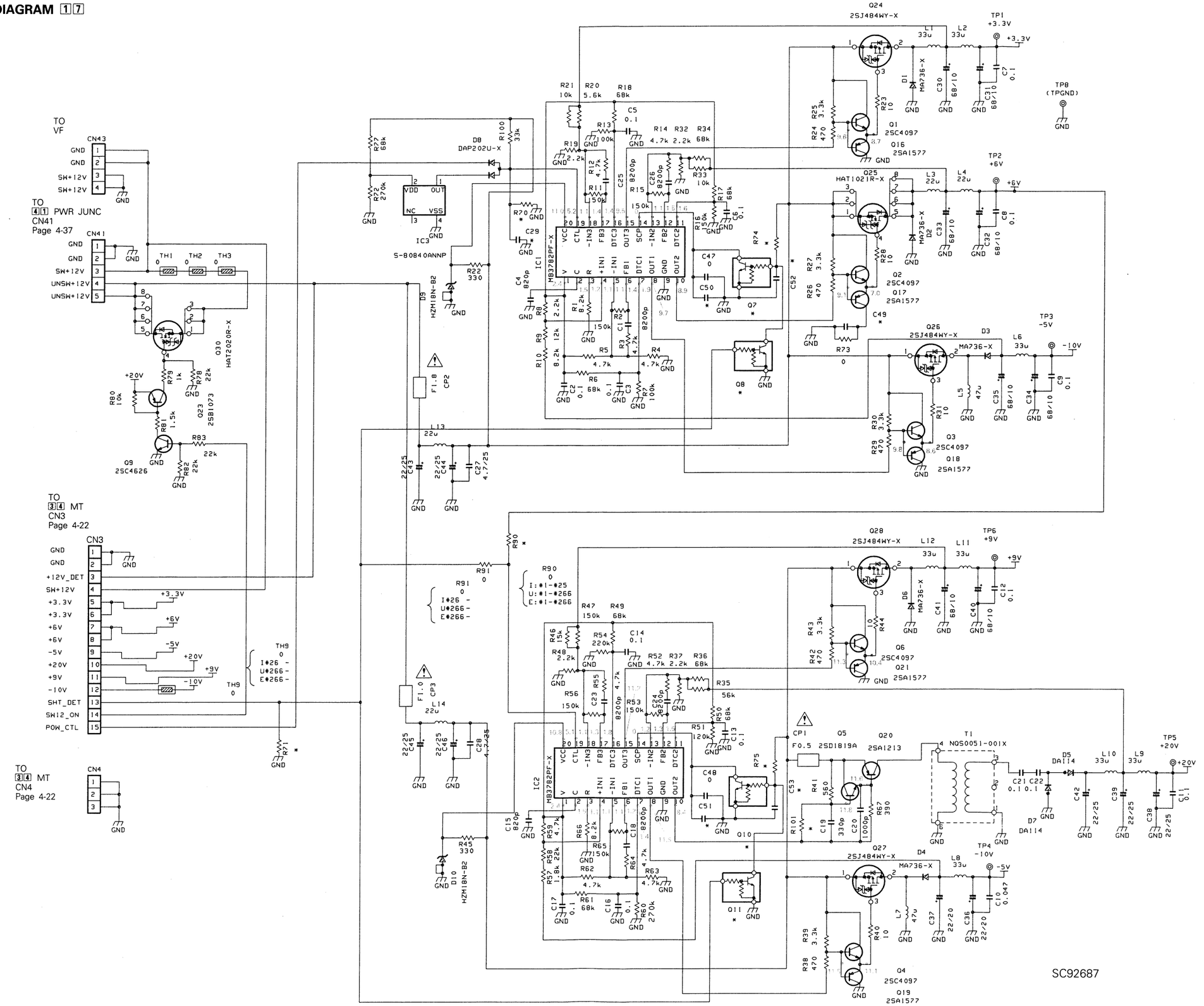

4.20 IF, IF2 SCHEMATIC DIAGRAM 21/18

• IF 21

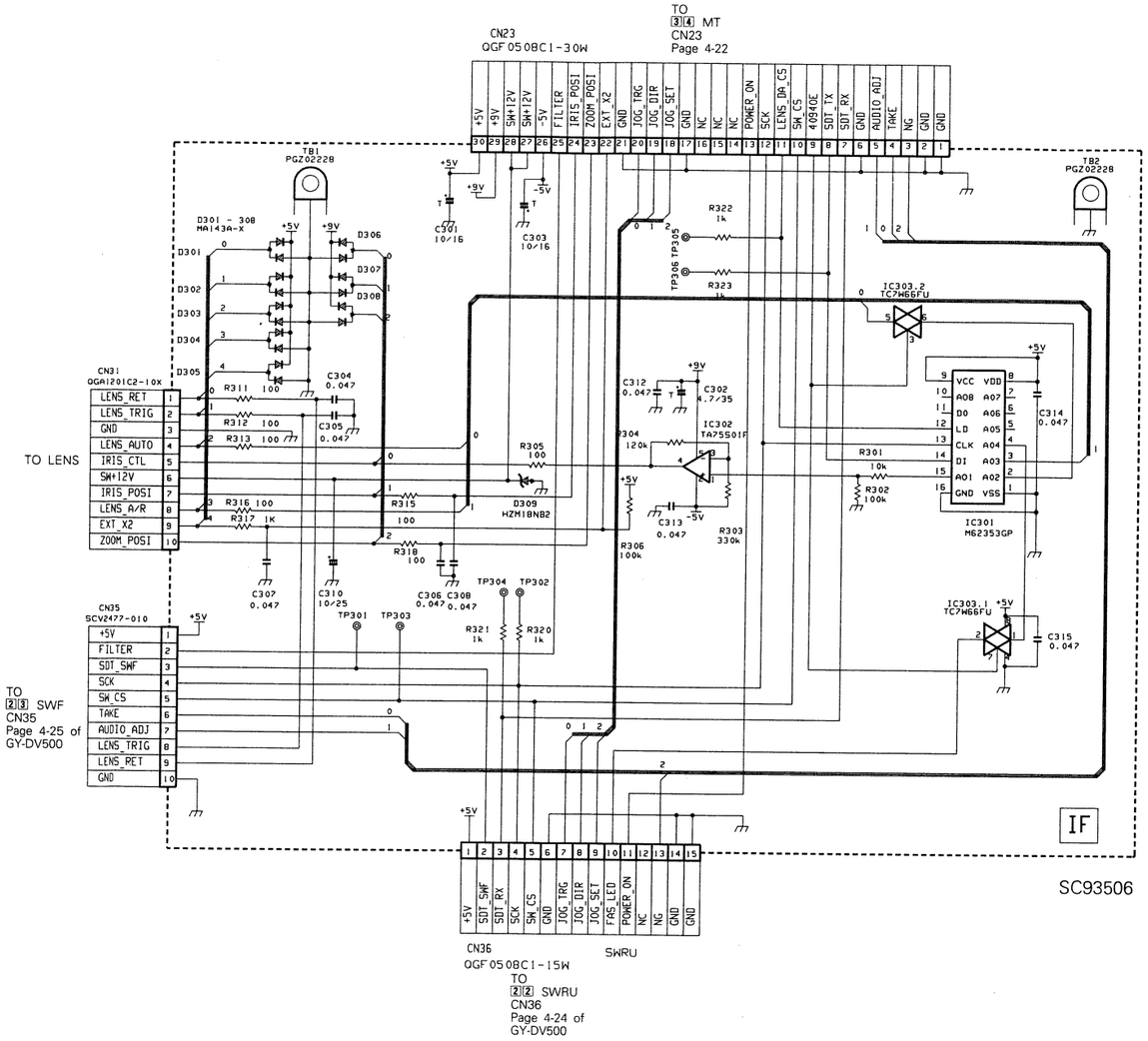

SC93506

• IF2 18

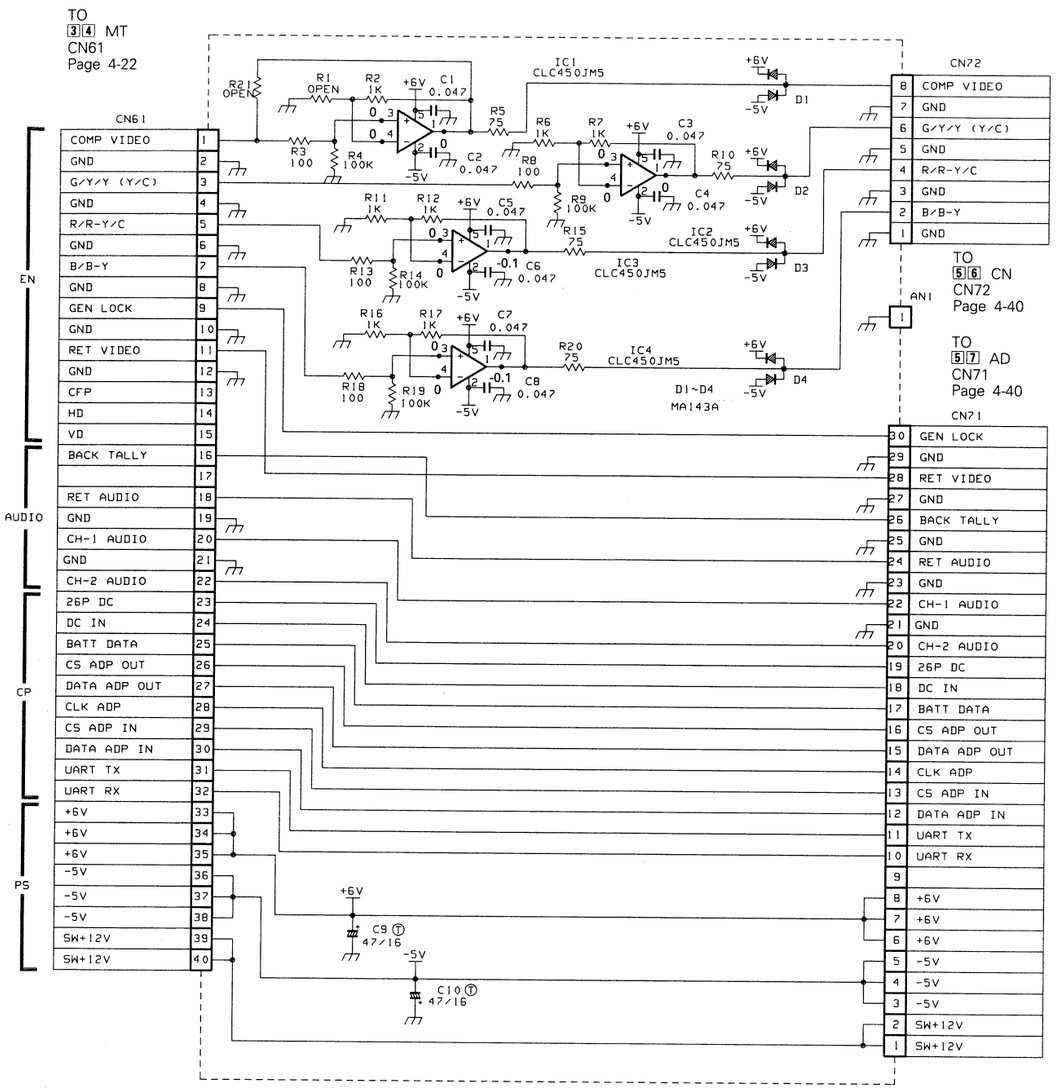

SC93537

4-32

4.21 PS, IF, IF2 CIRCUIT BOARD

• PS

– SIDE A –

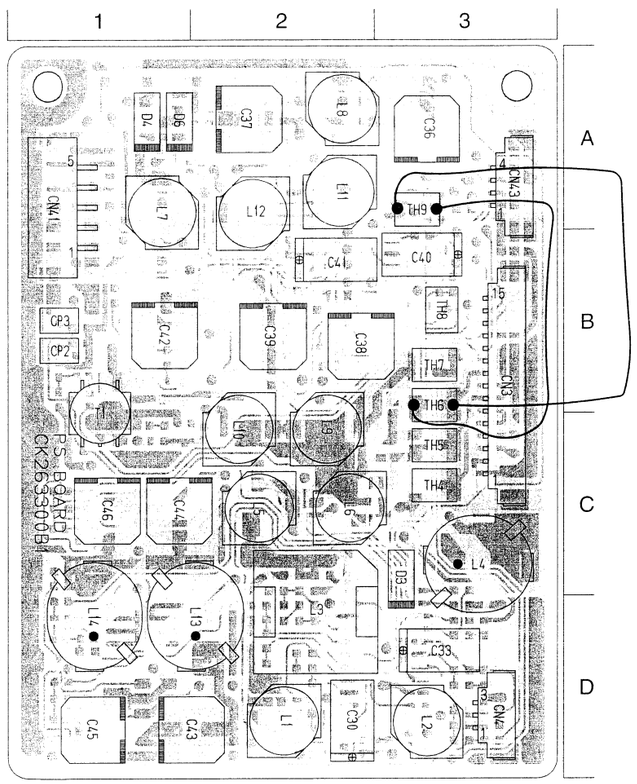

– SIDE B –

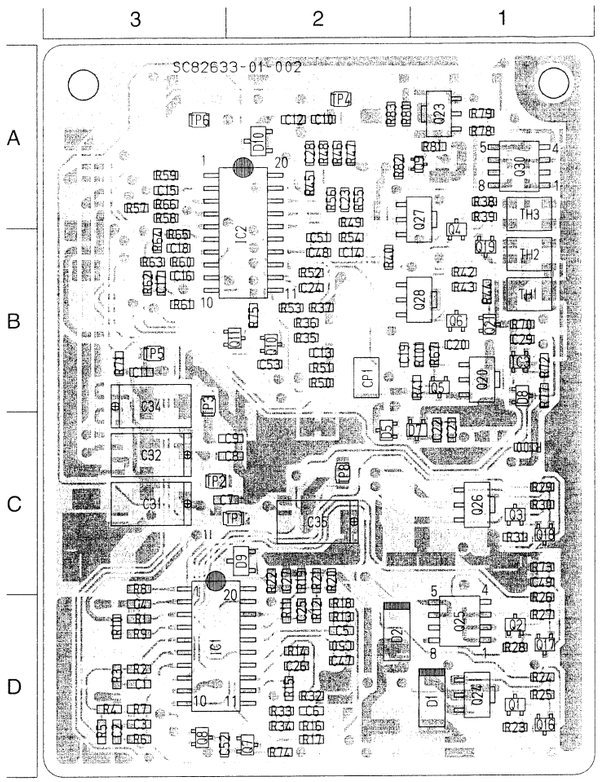

• IF

– SIDE A –

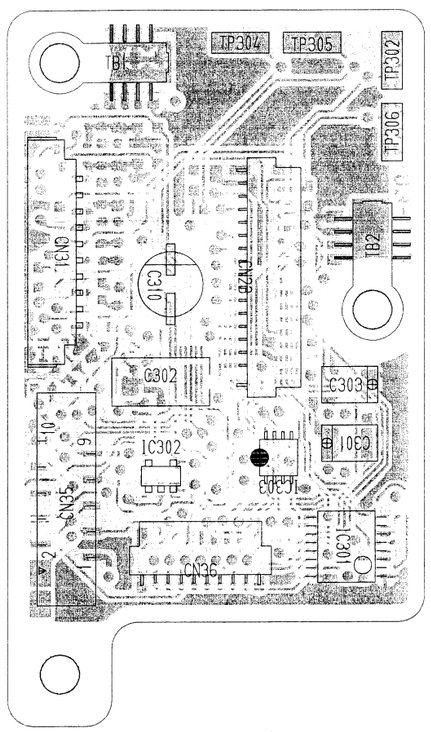

– SIDE B –

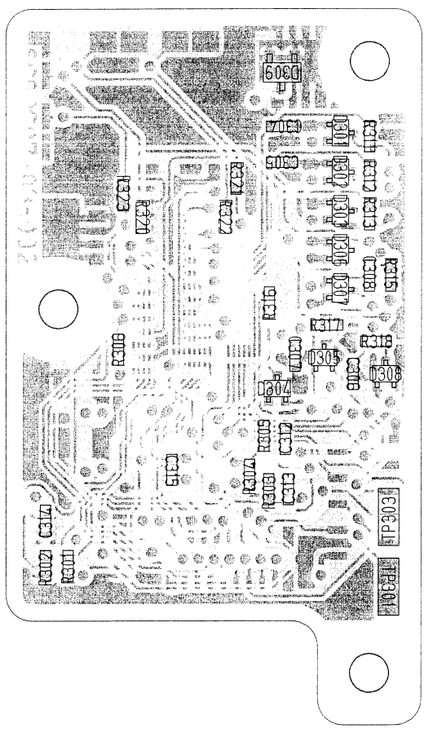

• IF2

– SIDE A –

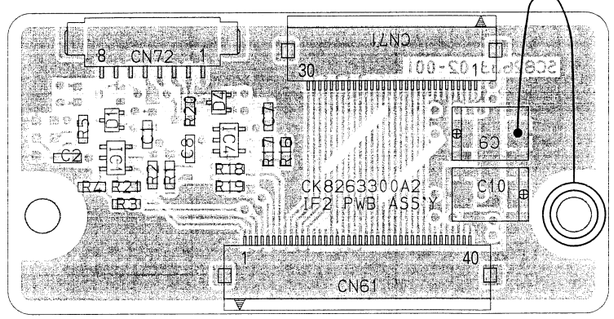

– SIDE B –

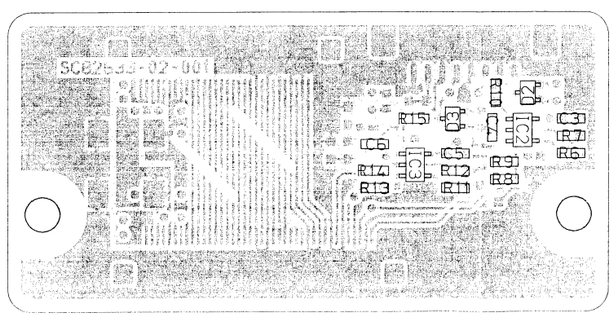

● **ADDRESS TABLE OF BOARD PARTS**

Each address may have an address error by one interval.

A-1C
Side — Y axis
X axis

IC1	B-3D	Q21	B-1B	R1	B-3D	R21	B-2C	R41	B-1B	R61	B-3B	R100	B-1C	C18	B-3B	C38	A-2B	L4	A-3C	CN3	A-3B
IC2	B-2A	Q23	B-1A	R2	B-3D	R22	B-2C	R42	B-1B	R62	B-3B	R101	B-1B	C19	B-2B	C39	A-2B	L5	A-2C	CN4	A-3D
IC3	B-1B	Q24	B-1D	R3	B-3D	R23	B-1D	R43	B-1B	R63	B-3B			C20	B-1B	C40	A-3B	L6	A-2C	CN41	A-1A
		Q25	B-1D	R4	B-3D	R24	B-1D	R44	B-1B	R64	B-3B	C1	B-3D	C21	B-1C	C41	A-2B	L7	A-1A	CN43	A-3A
Q1	B-1D	Q26	B-1C	R5	B-3D	R25	B-1D	R45	B-2A	R65	B-3A	C2	B-3D	C22	B-1C	C42	A-1B	L8	A-2A		
Q2	B-1D	Q27	B-1A	R6	B-3D	R26	B-1D	R46	B-2A	R66	B-3A	C3	B-3D	C23	B-2A	C43	A-1D	L9	A-2C	CP1	B-2B
Q3	B-1C	Q28	B-1B	R7	B-3D	R27	B-1D	R47	B-2A	R67	B-1B	C4	B-3D	C24	B-2B	C44	A-1C	L10	A-2C	CP2	A-1B
Q4	B-1A	Q30	B-1A	R8	B-3C	R28	B-1D	R48	B-2A	R70	B-1B	C5	B-2D	C25	B-2D	C45	A-1D	L11	A-2A	CP3	A-1B
Q5	B-1B			R9	B-3D	R29	B-1C	R49	B-2A	R71	B-3B	C6	B-2D	C26	B-2D	C46	A-1C	L12	A-2A		
Q6	B-1B	D1	B-1D	R10	B-3D	R30	B-1C	R50	B-2B	R72	B-1B	C7	B-2C	C27	B-2C	C47	B-2D	L13	A-1D	TH1	B-1B
Q7	B-2D	D2	B-2D	R11	B-2D	R31	B-1C	R51	B-2B	R73	B-1C	C8	B-2C	C28	B-2A	C48	B-2B	L14	A-1D	TH2	B-1B
Q8	B-3D	D3	A-3C	R12	B-2D	R32	B-2D	R52	B-2B	R74	B-2D	C9	B-2C	C29	B-1B	C49	B-1C			TH3	B-1A
Q9	B-1A	D4	A-1A	R13	B-2D	R33	B-2D	R53	B-2B	R75	B-2B	C10	B-2A	C30	A-2D	C50	B-2D	TP1	B-2C	TH4	A-3C
Q10	B-2B	D5	B-2C	R14	B-2D	R34	B-2D	R54	B-2B	R77	B-1B	C11	B-3B	C31	B-3C	C51	B-2B	TP2	B-3C	TH5	A-3C
Q11	B-2B	D6	A-1A	R15	B-2D	R35	B-2B	R55	B-2A	R78	B-1A	C12	B-2A	C32	B-3C	C52	B-2D	TP3	B-3B	TH6	A-3B
Q16	B-1D	D7	B-1C	R16	B-2D	R36	B-2B	R56	B-2A	R79	B-1A	C13	B-2B	C33	A-3D	C53	B-2B	TP4	B-2A	TH7	A-3B
Q17	B-1D	D8	B-1B	R17	B-2D	R37	B-2B	R57	B-3A	R80	B-1A	C14	B-2B	C34	B-3B			TP5	B-3B	TH8	A-3B
Q18	B-1C	D9	B-2C	R18	B-2D	R38	B-1A	R58	B-3A	R81	B-1A	C15	B-3A	C35	B-2C	L1	A-2D	TP6	B-3A	TH9	A-3A
Q19	B-1B	D10	B-2A	R19	B-2C	R39	B-1A	R59	B-3A	R82	B-2A	C16	B-3B	C36	A-3A	L2	A-3D	TP8	B-2C		
Q20	B-1B			R20	B-2C	R40	B-2B	R60	B-3B	R83	B-2A	C17	B-3B	C37	A-2A	L3	A-2D			T1	A-1B

4-33

4.22 REG SCHEMATIC DIAGRAM 3 3

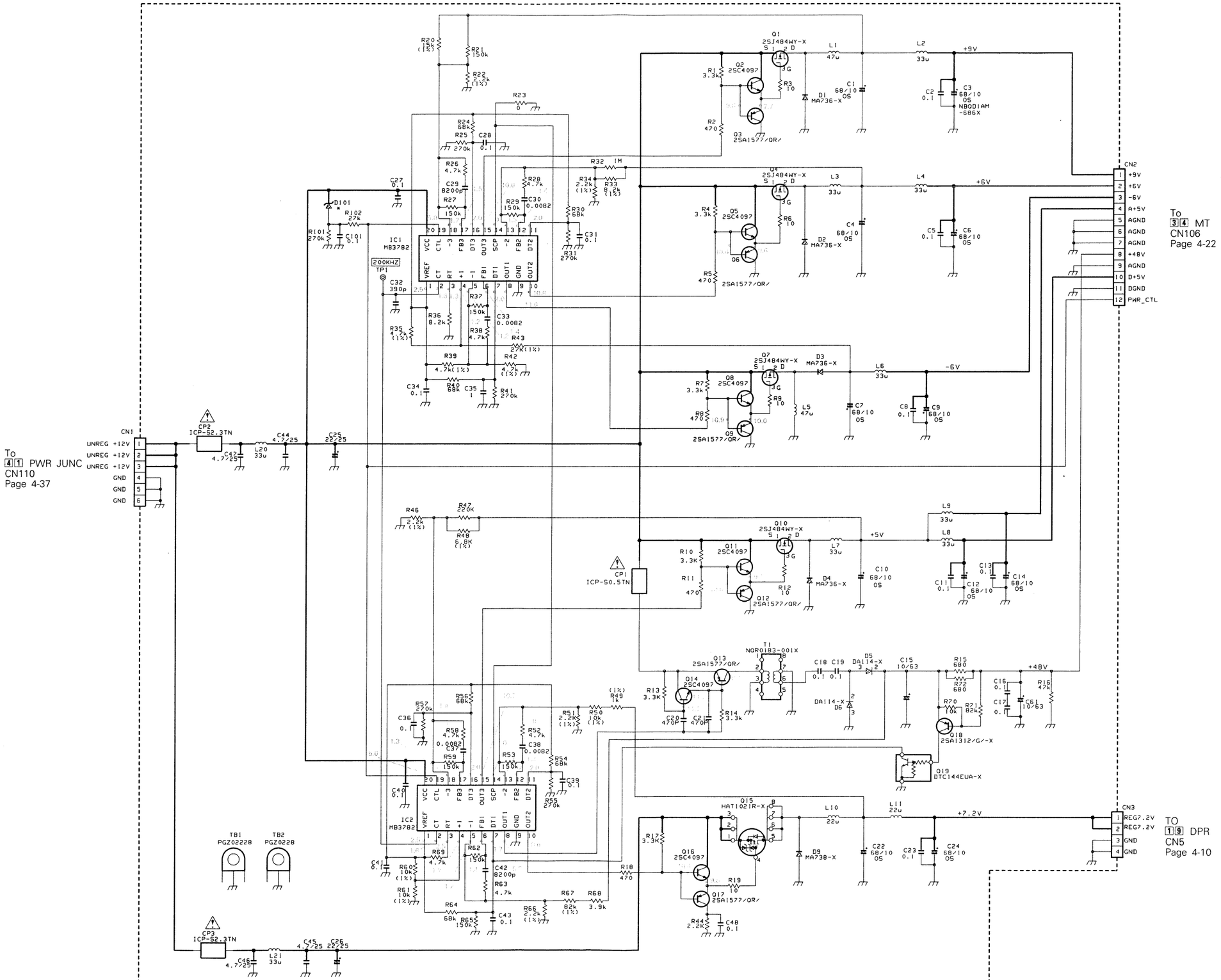

4.23 REG CIRCUIT BOARD

– SIDE A –

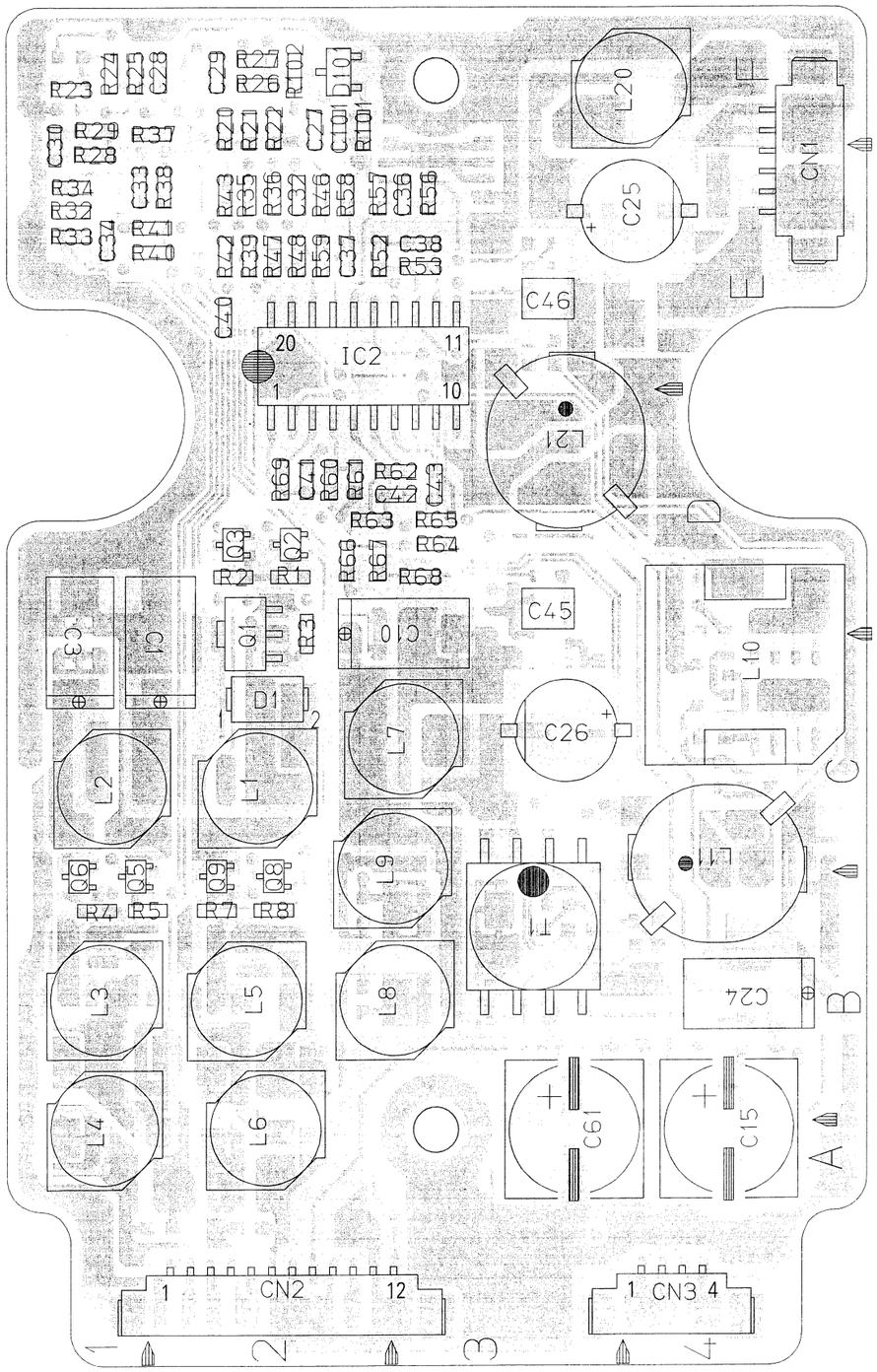

– SIDE B –

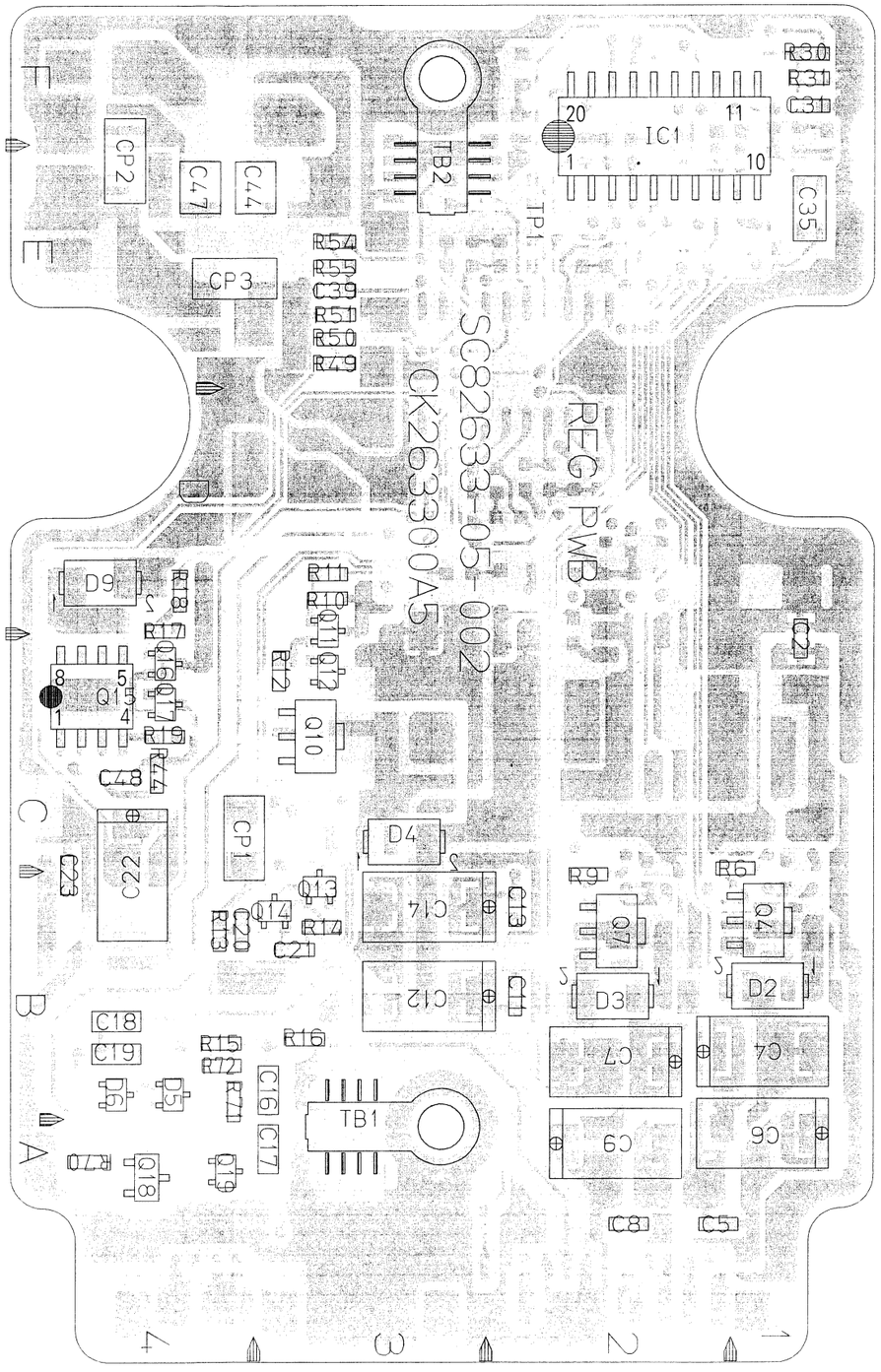

● **ADDRESS TABLE OF BOARD PARTS**

Each address may have an address error by one interval.

Side — A-1C — Y axis / X axis

IC1	B-2F	R22	A-2F	C1	A-1D	L3	A-1B
IC2	A-2E	R23	A-1F	C2	B-1D	L4	A-1B
		R24	A-1F	C3	A-1D	L5	A-2B
Q1	A-2D	R25	A-1F	C4	B-1B	L6	A-2B
Q2	A-2D	R26	A-2F	C5	B-1A	L7	A-2C
Q3	A-2D	R27	A-2F	C6	B-1B	L8	A-2B
Q4	B-1B	R28	A-1F	C7	B-2B	L9	A-2C
Q5	A-1C	R29	A-1F	C8	B-2A	L10	A-4D
Q6	A-1C	R30	B-1F	C9	B-2A	L11	A-4C
Q7	B-2B	R31	B-1F	C10	A-2D	L20	A-3F
Q8	A-2C	R32	A-1F	C11	B-2B	L21	A-3E
Q9	A-2C	R33	A-1E	C12	B-3B		
Q10	B-3C	R34	A-1F	C13	B-2C	TP1	B-2E
Q11	B-3D	R35	A-2F	C14	B-3C		
Q12	B-3D	R36	A-2F	C15	A-4B	CP1	B-3C
Q13	B-3C	R37	A-1F	C16	B-3B	CP2	B-4F
Q14	B-3B	R38	A-1F	C17	B-3A	CP3	B-4E
Q15	B-4C	R39	A-2E	C18	B-4B		
Q16	B-4D	R40	A-1E	C19	B-4B	CN1	A-4F
Q17	B-4C	R41	A-1F	C20	B-3B	CN2	A-2A
Q18	B-4A	R42	A-2E	C21	B-3B	CN3	A-4A
Q19	B-4A	R43	A-2F	C22	B-4C		
		R44	B-4C	C23	B-4C	TB1	B-3B
D1	A-2C	R46	A-2F	C24	A-4B	TB2	B-3F
D2	B-1B	R47	A-2E	C25	A-3F		
D3	B-2B	R48	A-2E	C26	A-3C	T1	A-3B
D4	B-3C	R49	B-3E	C27	A-2F		
D5	B-4B	R50	B-3E	C28	A-1F		
D6	B-4B	R51	B-3E	C29	A-2F		
D9	B-4D	R52	A-2E	C30	A-1F		
D101	A-2F	R53	A-3E	C31	B-1F		
		R54	B-3E	C32	A-2F		
R1	A-2D	R55	B-3E	C33	A-1F		
R2	A-2D	R56	A-3F	C34	A-1E		
R3	A-2D	R57	A-2F	C35	B-1F		
R4	A-1C	R58	A-2F	C36	A-2F		
R5	A-1C	R59	A-2E	C37	A-2E		
R6	B-1C	R60	A-2D	C38	A-3E		
R7	A-2C	R61	A-2D	C39	B-3E		
R8	A-2C	R62	A-2D	C40	A-2E		
R9	B-2C	R63	A-2D	C41	A-2D		
R10	B-3D	R64	A-3D	C42	A-2D		
R11	B-3D	R65	A-3D	C43	A-3D		
R12	B-3D	R66	A-2D	C44	B-3F		
R13	B-4B	R67	A-2D	C45	A-3D		
R14	B-3B	R68	A-3D	C46	A-3E		
R15	B-4B	R69	A-2D	C47	B-4F		
R16	B-3B	R70	B-4A	C48	B-4C		
R17	B-4D	R71	B-4B	C61	A-3B		
R18	B-4D	R72	B-4B	C101	A-2F		
R19	B-4C	R101	A-2F				
R20	A-2F	R102	A-2F	L1	A-2C		
R21	A-2F			L2	A-1C		

4-35

4.25 PWR JUNC, OPE SCHEMATIC DIAGRAM 41/35

• PWR JUNC 41

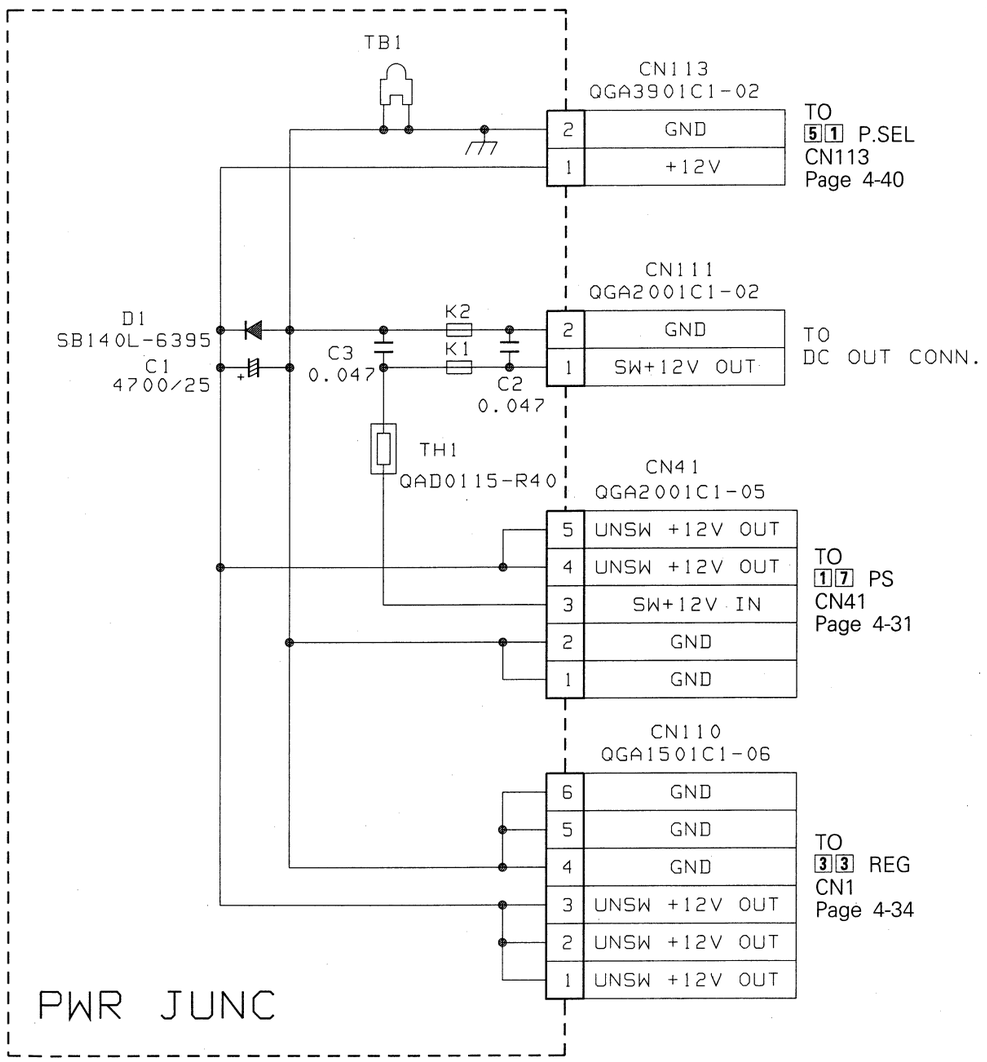

SC92686

• OPE 35

* : Not mounted.

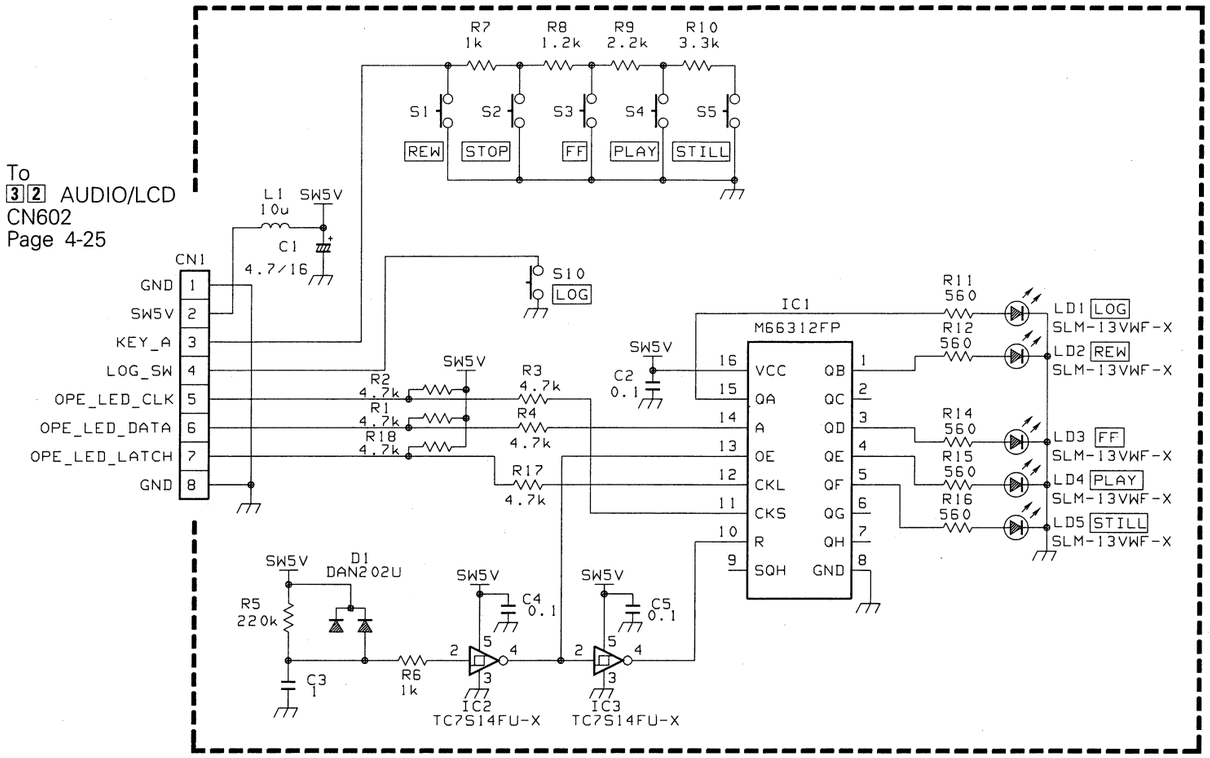

SL94022

4-37

4.26 CONNECT, REMOTE, XLR, EAR.J, SEN1, SENS2 SCHEMATIC DIAGRAM 42/38/40/43/36/37

• CONNECT 42

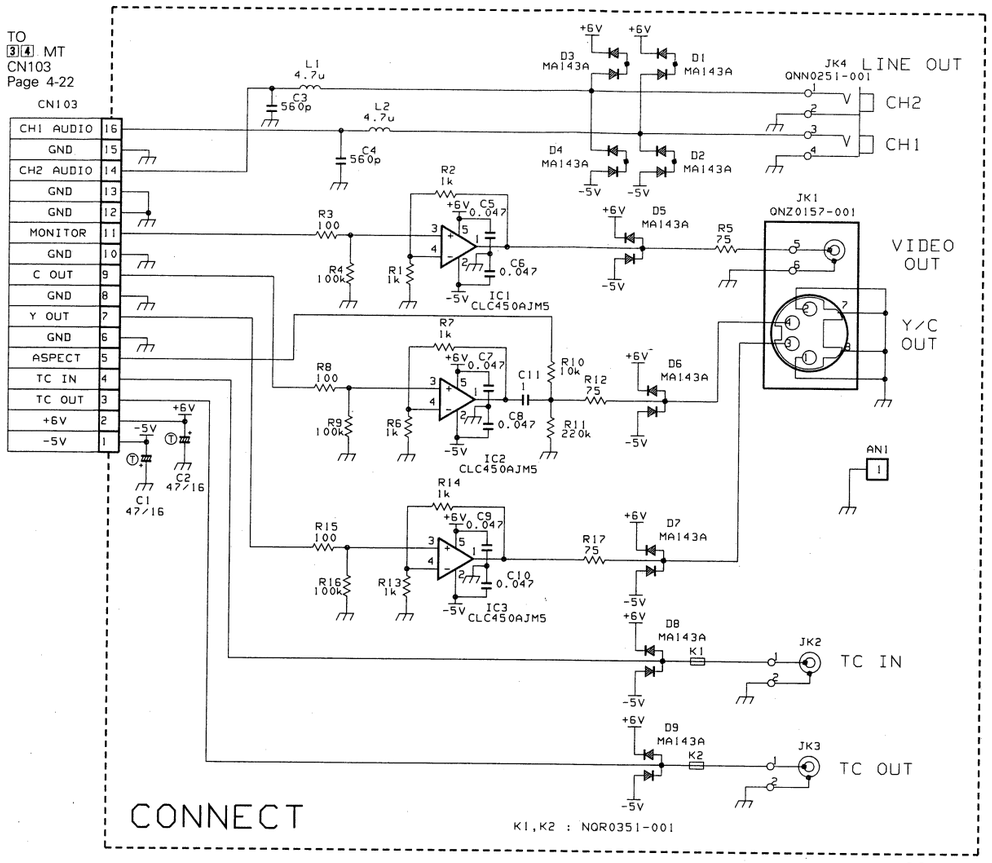

SC92686

• REMOTE 38

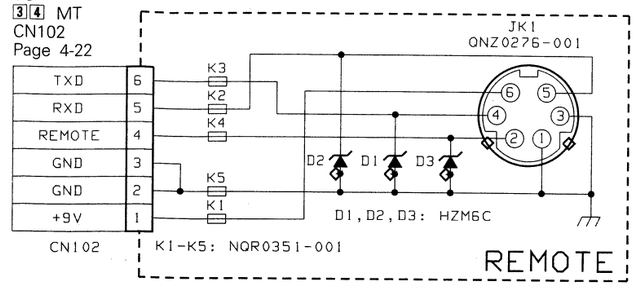

SC92686

• XLR 40

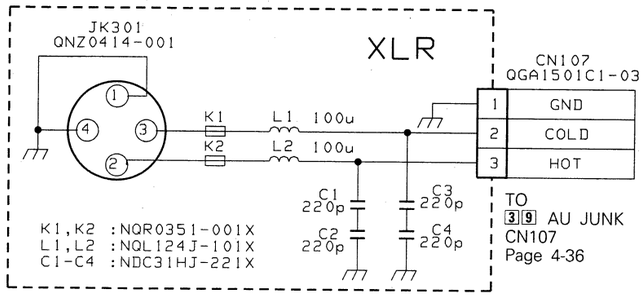

SC92686

• EAR.J 43

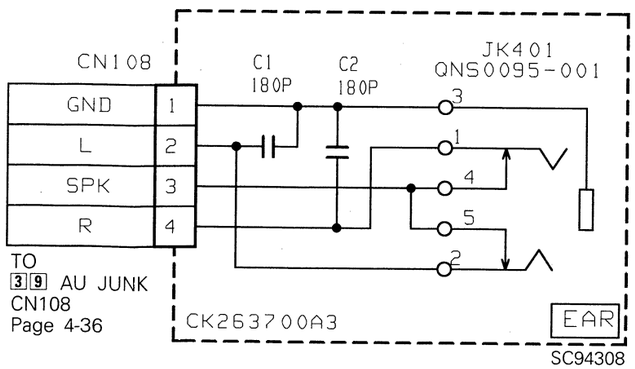

SC94308

• SEN1 36

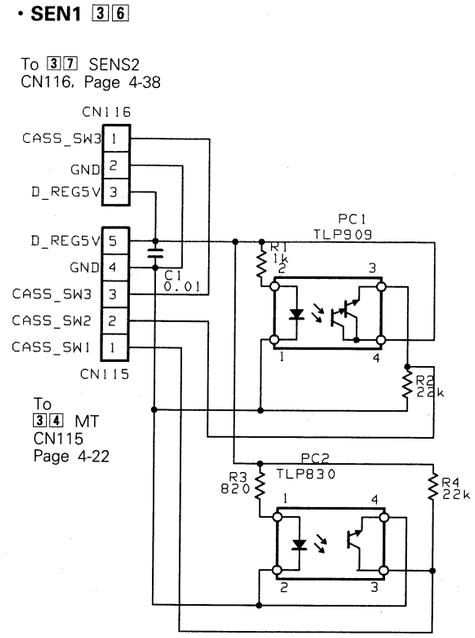

SL94023

• SENS2 37

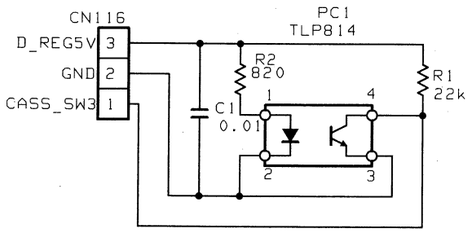

SL94024

4.27 AU JUNK, PWR JUNC, OPE, CONNECT, REMOTE, XLR, EAR.J, SEN1, SENS2 CIRCUIT BOARD

• AU JUNK

— SIDE A —

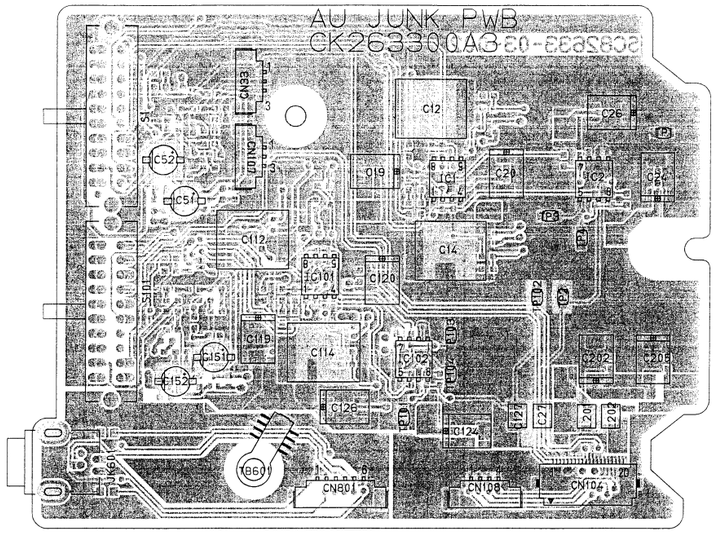

— SIDE B —

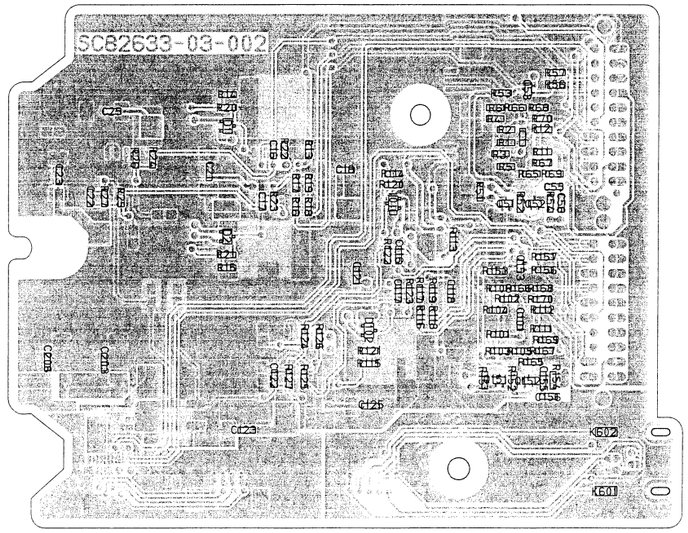

• PWR JUNC

— SIDE B —

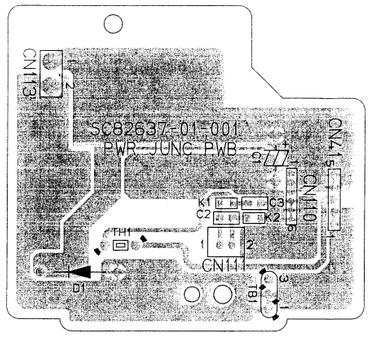

• OPE

— SIDE A —

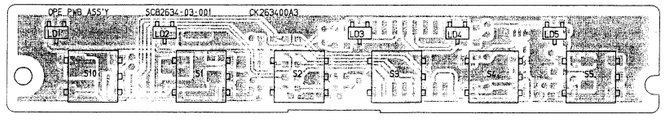

— SIDE B —

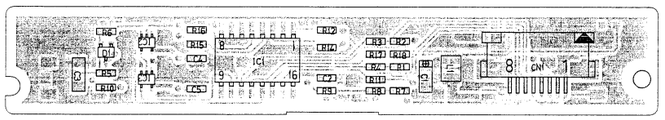

• CONNECT

— SIDE B —

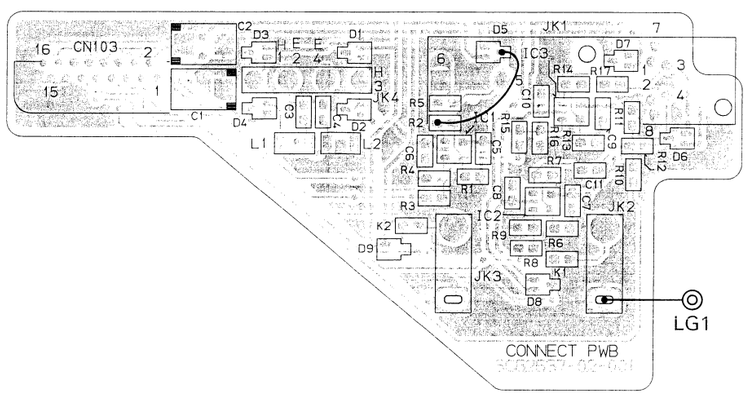

• REMOTE

— SIDE A —

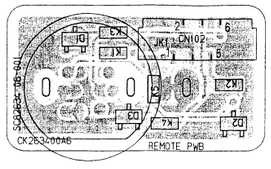

• XLR

— SIDE A —

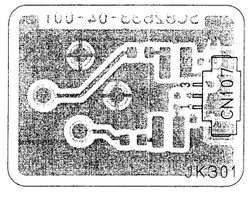

— SIDE B —

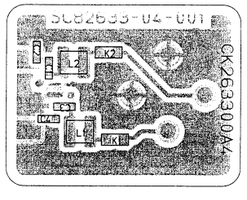

• EAR.J

— SIDE B —

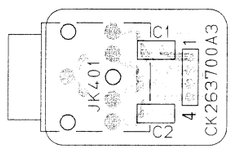

• SEN1

— SIDE A —

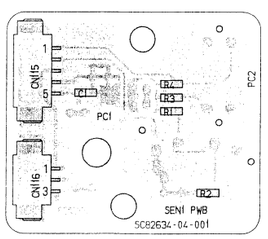

• SENS2

— SIDE A —

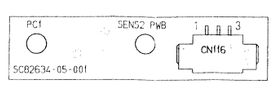

— SIDE B —

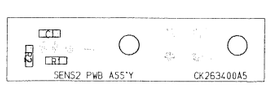

4.28 AD, CT, P.SEL, 26P, TA3, TA4, BNC, CN SCHEMATIC DIAGRAM 57/50/51/52/53/54/55/56

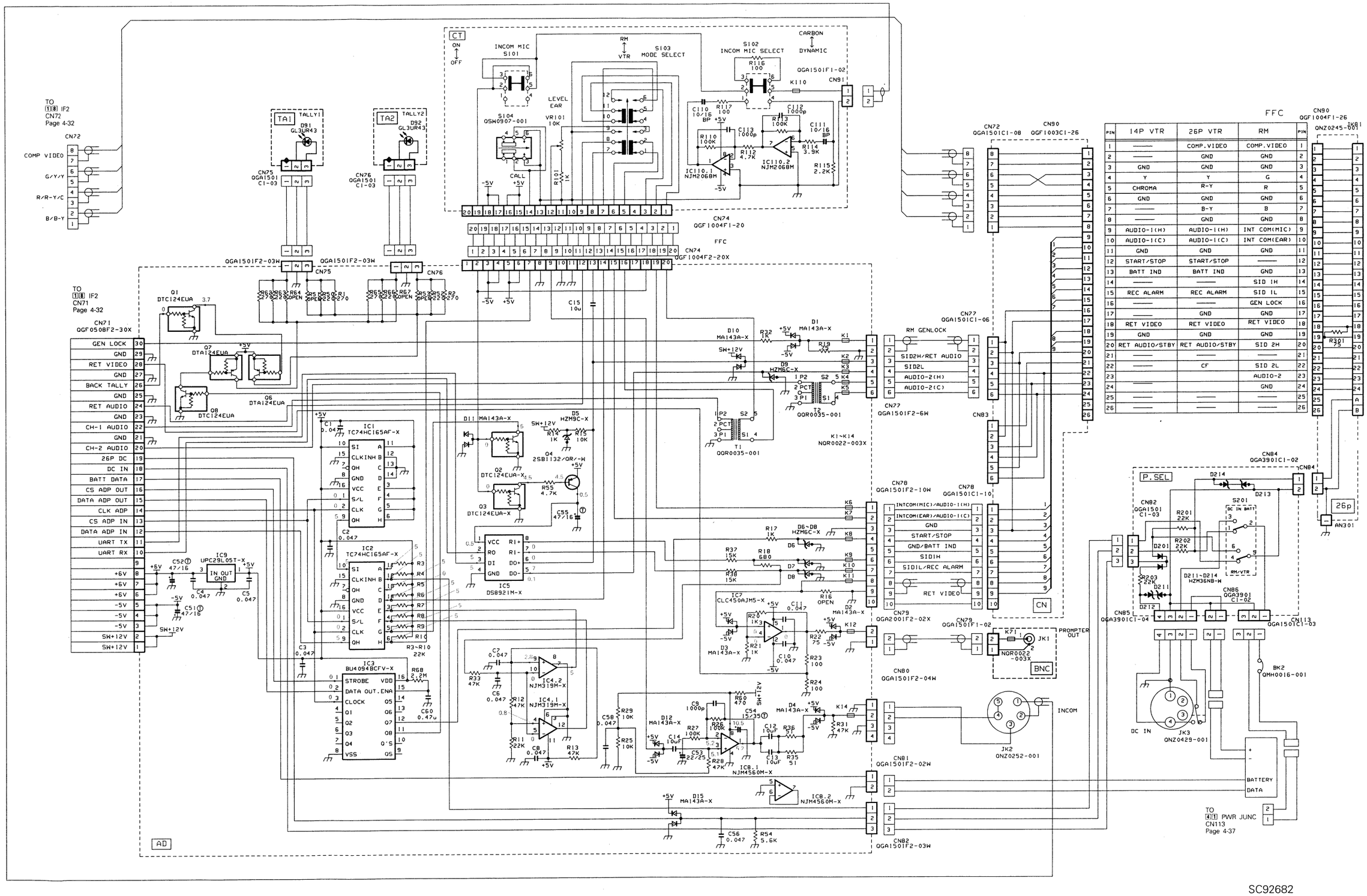

SC92682

4.29 AD, CT, 26P, TA3, TA4, BNC, CN CIRCUIT BOARD

• AD

− SIDE A −　　　　　　　　− SIDE B −

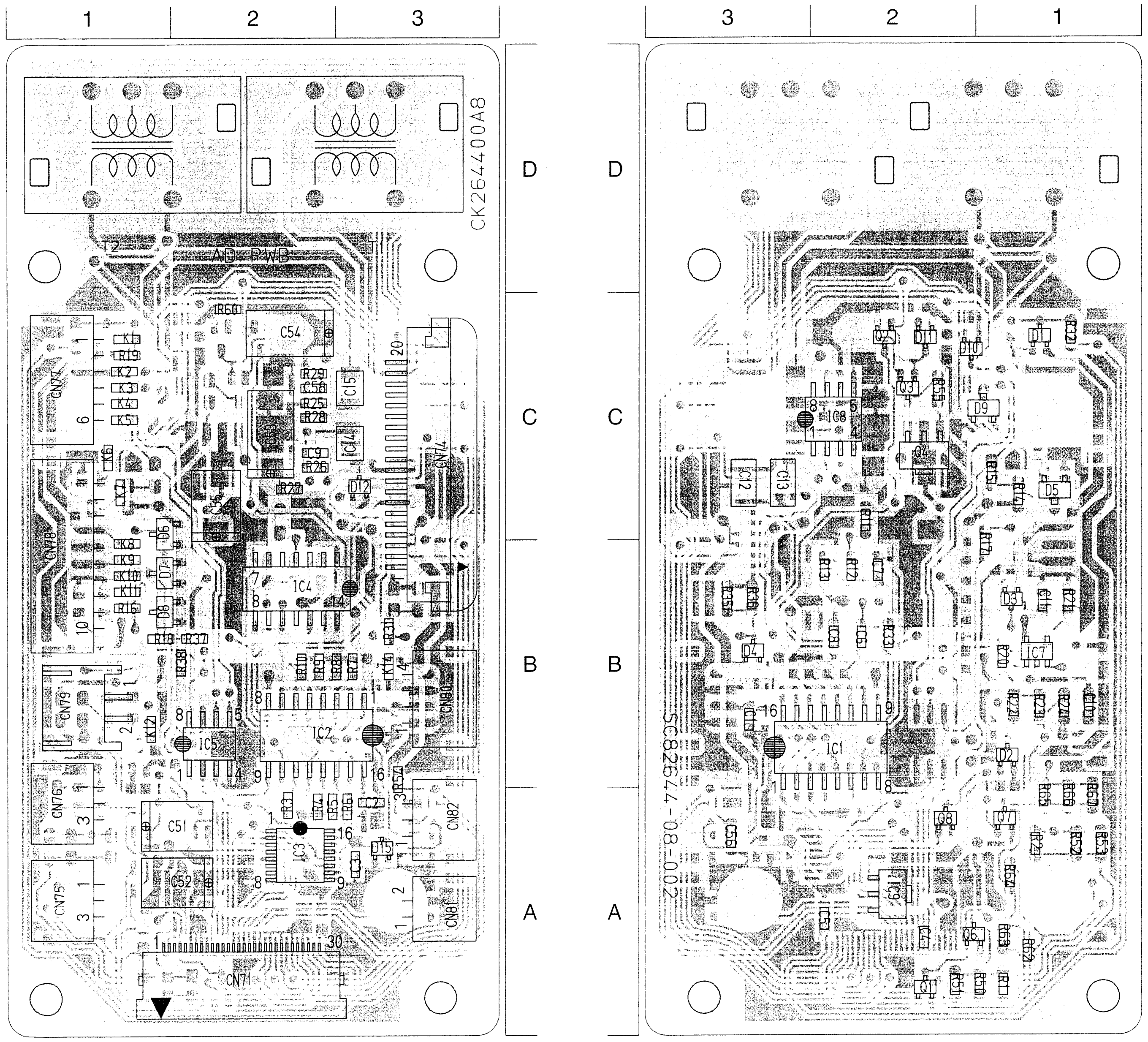

• CT

− SIDE A −　　　　　　　　− SIDE B −

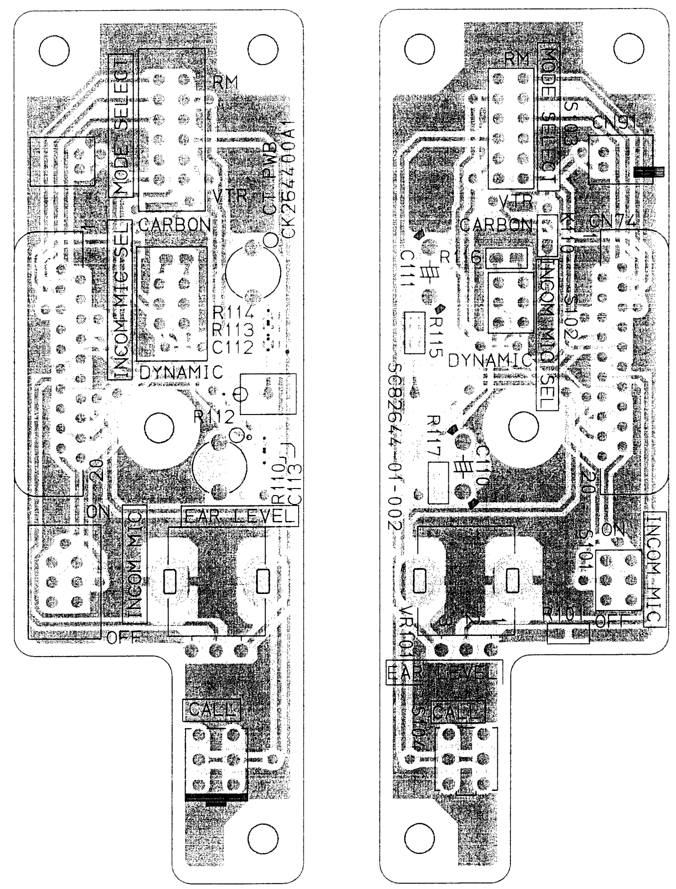

• TA3

− SIDE A −

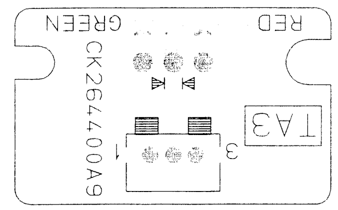

• TA4

− SIDE A −

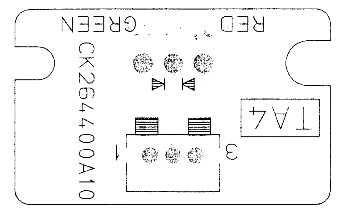

• BNC

− SIDE B −

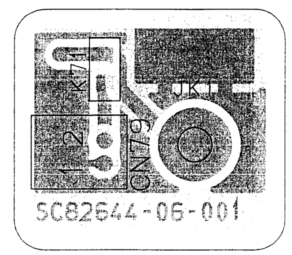

• CN

− SIDE A −　　　　　　　　− SIDE B −

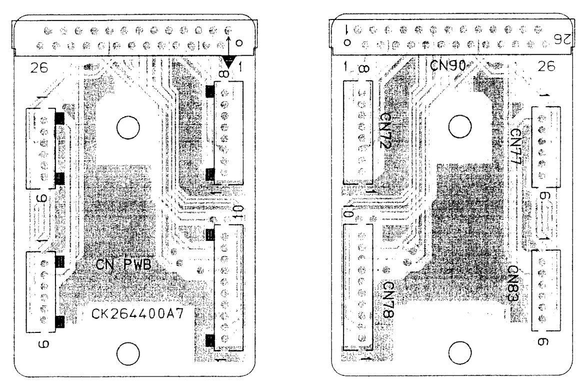

• 26P

− SIDE B −

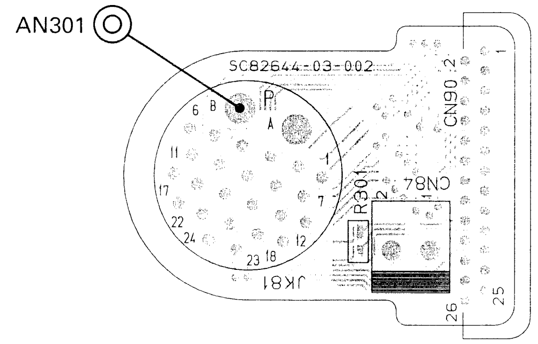

• P. SEL

− SIDE B −

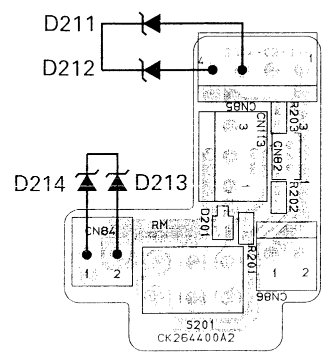

● **ADDRESS TABLE OF BOARD PARTS**
Each address may have an address error by one interval.

A-1C
Side ─┘ │ └── Y axis
　　　 └──── X axis

IC1	B-2B	Q7	B-1A	D12	A-3C	R12	B-2B	R26	A-2C	R53	B-1A	C4	B-2A	C53	A-2C	K9	A-1B	CN81	A-3A
IC2	A-2B	Q8	B-2A	D15	A-3A	R13	B-2B	R27	A-2C	R54	A-3B	C5	B-2A	C54	A-2C	K10	A-1B	CN82	A-3A
IC3	A-2A					R14	B-1C	R28	A-2C	R55	B-2C	C6	B-2B	C55	A-2C	K11	A-1B		
IC4	A-2B	D1	B-1C	R1	B-1A	R15	B-1C	R29	A-2C	R60	A-2C	C7	B-2B	C56	B-3A	K12	A-1B	T1	A-2D
IC5	A-2B	D2	B-1B	R2	B-1A	R16	A-1B	R31	A-3B	R62	B-1A	C8	B-2B	C58	A-2C	K14	A-3B	T2	A-1D
IC7	B-1B	D3	B-1B	R3	A-2A	R17	B-1B	R32	B-1C	R63	B-1A	C9	A-2C						
IC8	B-2C	D4	B-3B	R4	A-2A	R18	A-1B	R33	B-2B	R64	B-1A	C10	B-1B	K1	A-1C	CN71	A-2A		
IC9	B-2A	D5	B-1C	R5	A-2A	R19	A-1C	R35	B-3B	R65	B-1A	C11	B-1B	K2	A-1C	CN74	A-3C		
		D6	A-1C	R6	A-3A	R20	B-1B	R36	B-3B	R66	B-1A	C12	B-3C	K3	A-1C	CN75	A-1A		
Q1	B-2A	D7	A-1B	R7	A-3B	R21	B-1B	R37	A-2B	R67	B-1A	C13	B-3C	K4	A-1C	CN76	A-1A		
Q2	B-2C	D8	A-1B	R8	A-2B	R22	B-1B	R38	A-2B			C14	A-3C	K5	A-1C	CN77	A-1C		
Q3	B-2C	D9	B-1C	R9	A-2B	R23	B-1B	R50	B-1A	C1	B-3B	C15	A-3C	K6	A-1C	CN78	A-1B		
Q4	B-2C	D10	B-1C	R10	A-2B	R24	B-1B	R51	B-2A	C2	A-3A	C51	A-1A	K7	A-1C	CN79	A-1B		
Q6	B-1A	D11	B-2C	R11	B-2C	R25	A-2C	R52	B-1A	C3	A-3A	C52	A-1A	K8	A-1B	CN80	A-3B		

4.30 ROM SCHEMATIC DIAGRAM AND CIRCUIT BOARD 0 3

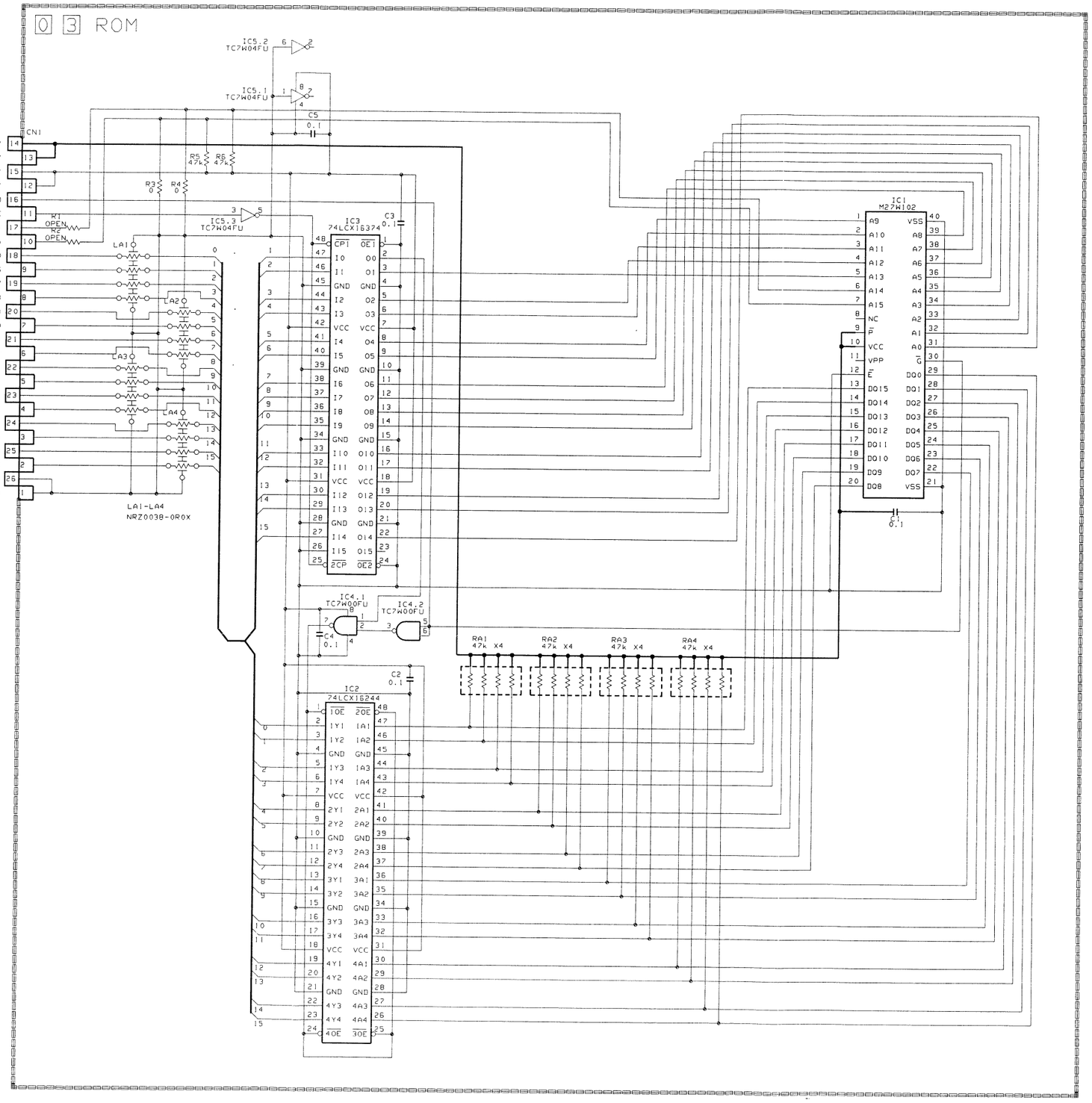

SL93104

— SIDE A —

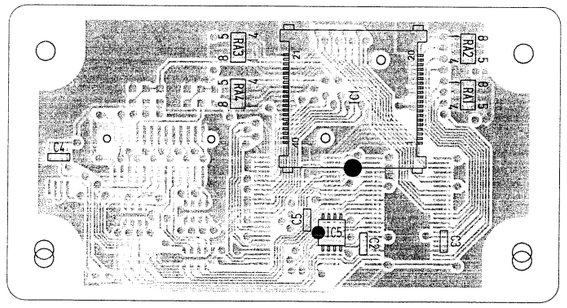

— SIDE B —

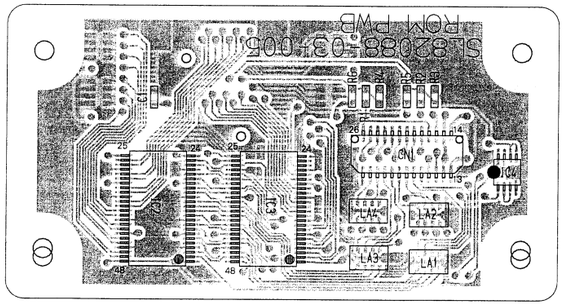

4-42

4.31 IS, TG BLOCK DIAGRAM (G channel)

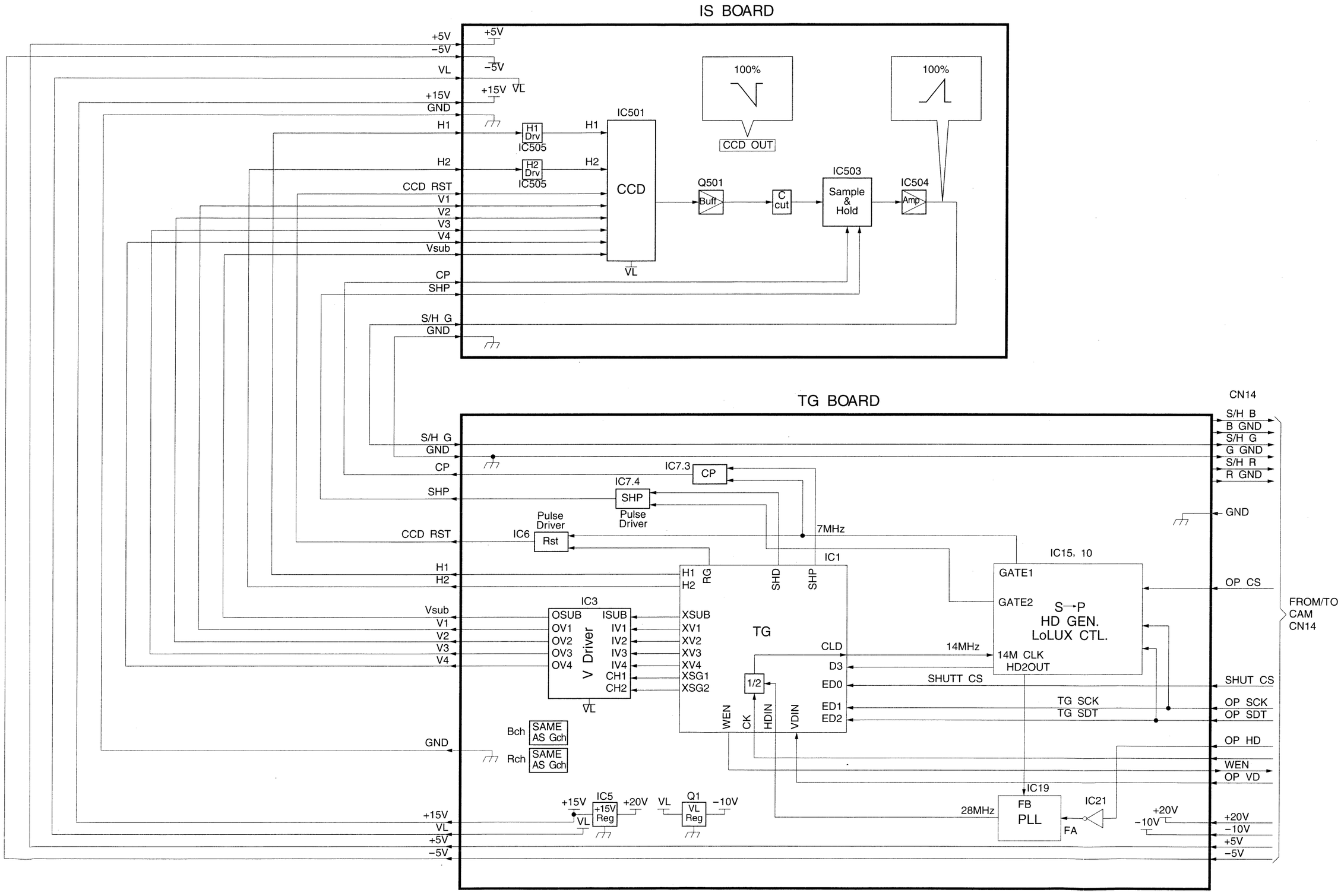

4.32 CAM BLOCK DIAGRAM

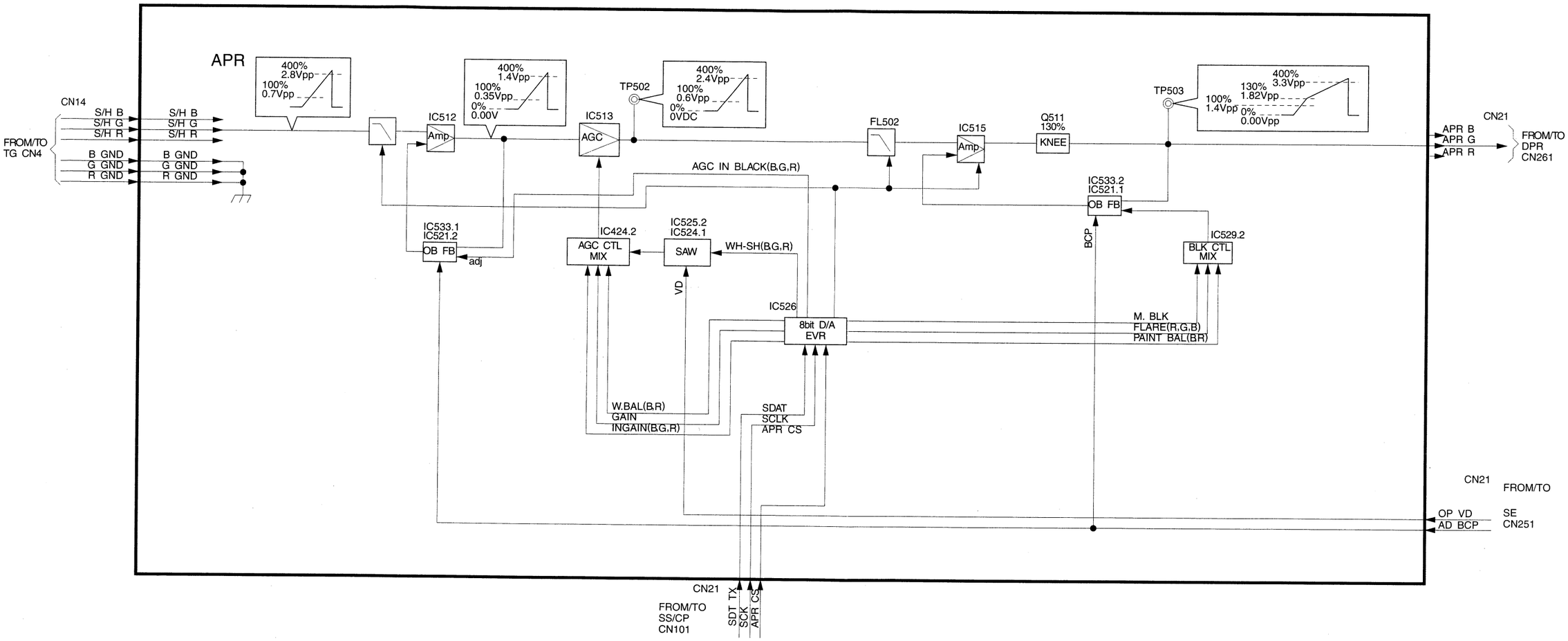

4-44

4.33 DPR BLOCK DIAGRAM

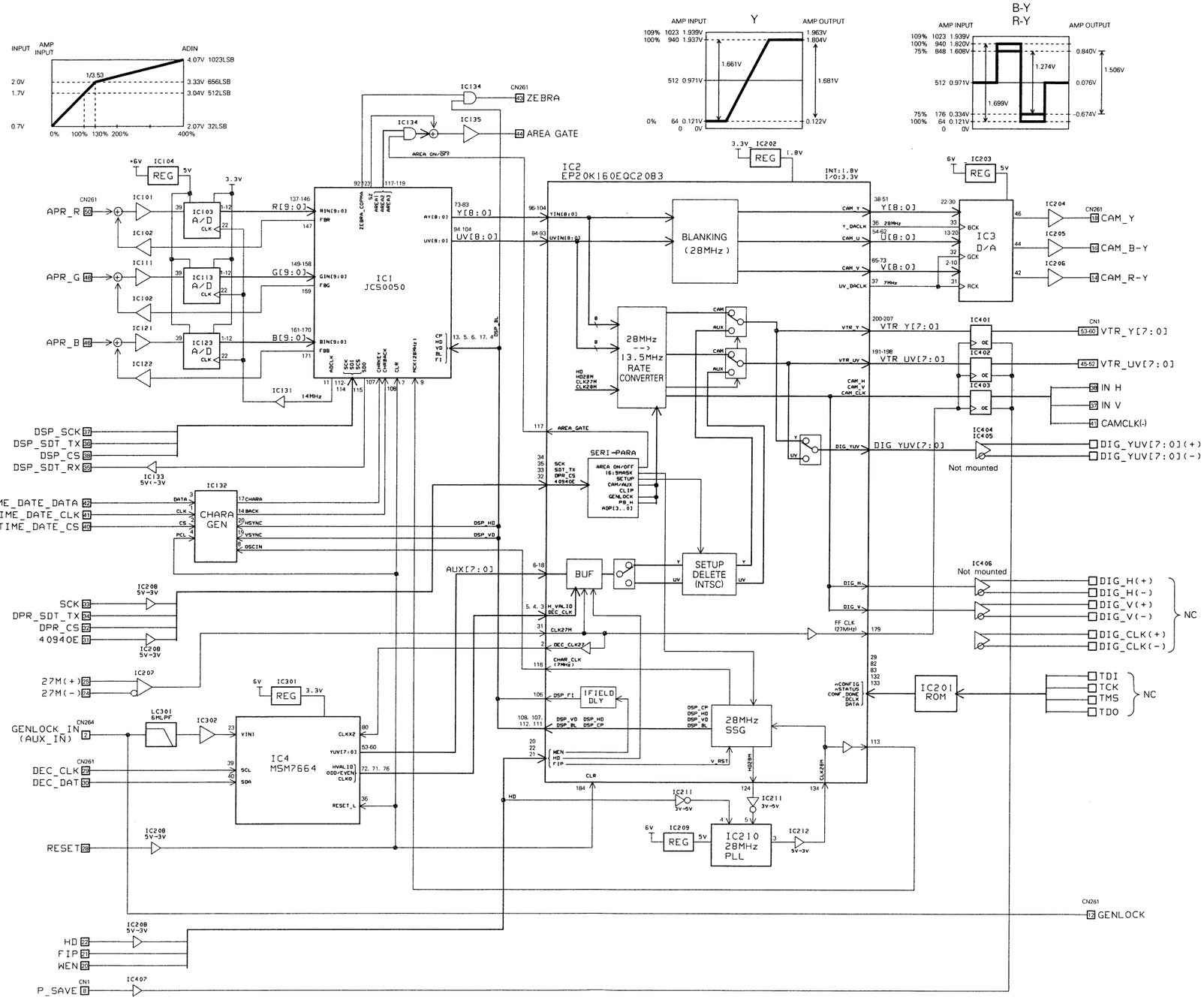

4.34 SE BLOCK DIAGRAM

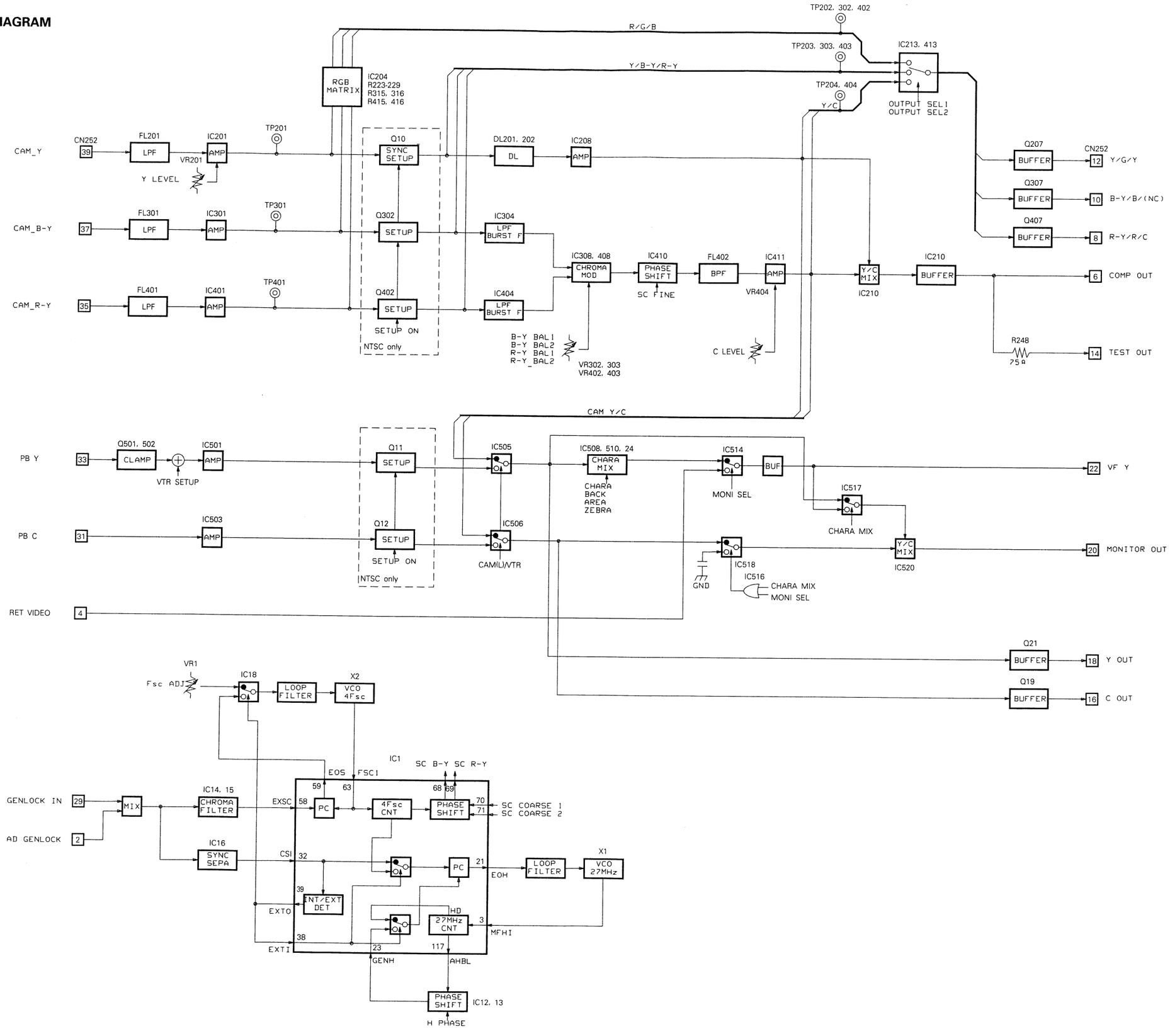

4-46

4.35 SS/CP BLOCK DIAGRAM

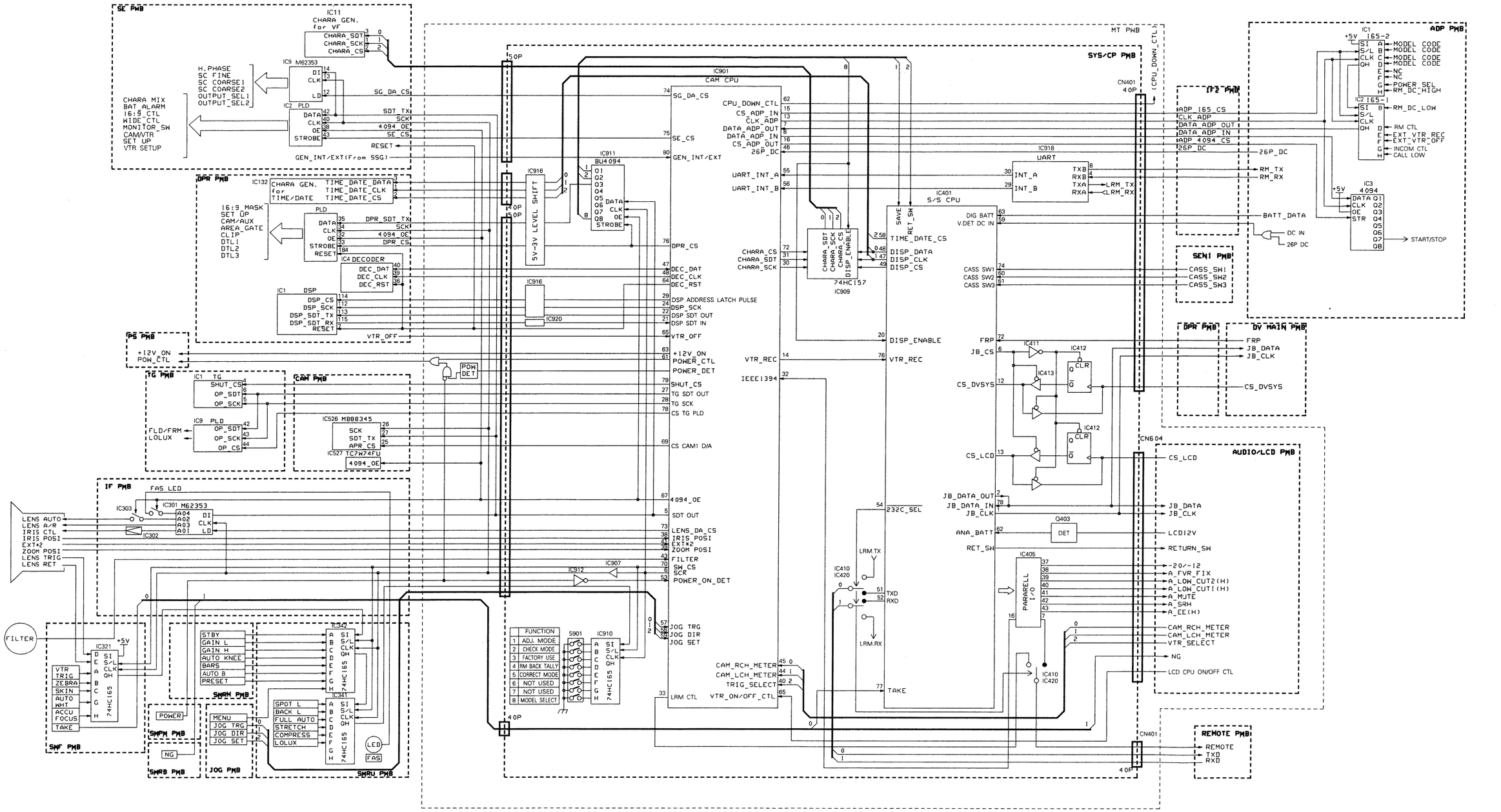

4-47

4.36 AUDIO/LCD BLOCK DIAGRAM (1/2)

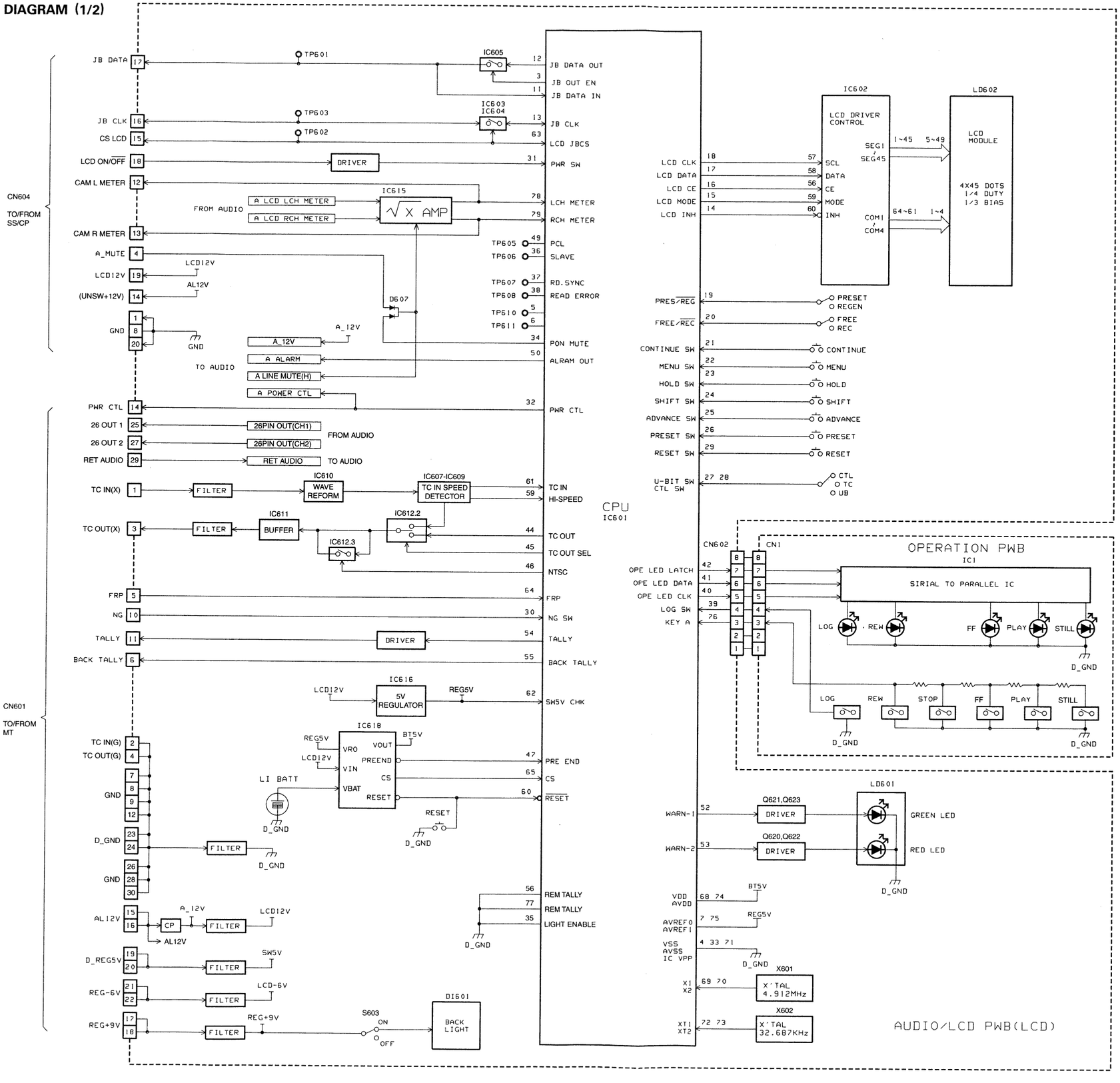

4-48

• AUDIO/LCD BLOCK DIAGRAM (2/2)

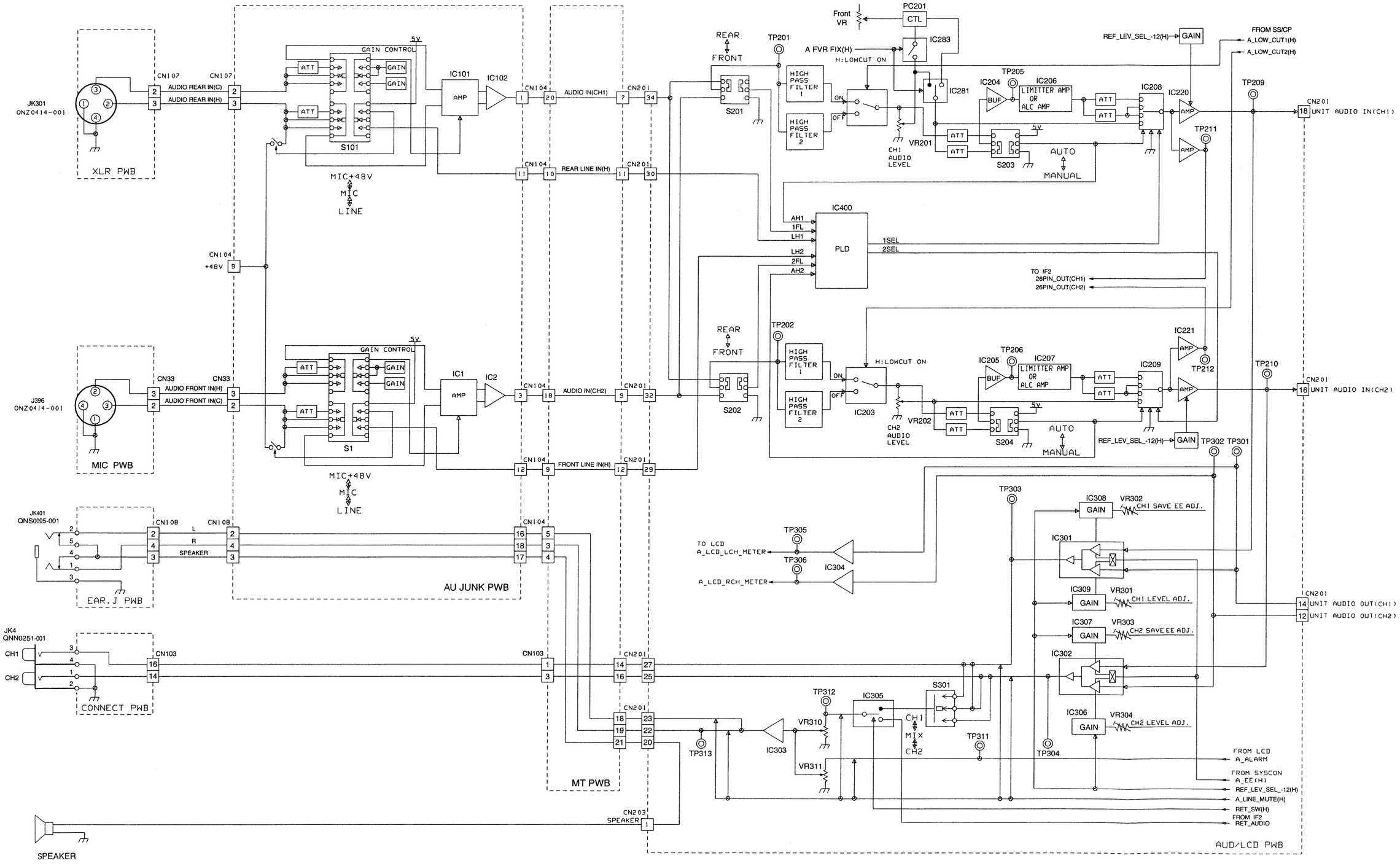

4.37 IC BLOCK DIAGRAMS

■ AD603AR-X [ANALOG DEVICES] (Variable Gain CTL Amplifier)

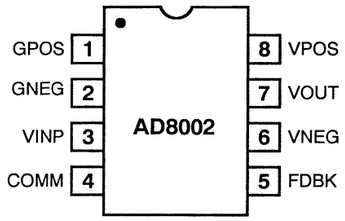

■ Pin funoction

Pin No.	Pin Name
1	GPOS Gain CTL Input " HI "
2	GNEG Gain CTL Input " LOW "
3	VINP Amp. Input
4	COMM GND
5	FDBK Feedback
6	VNEG Vss
7	VOUT Output
8	VPOS V_{DD}

■ AD8031ART-X [ANALOG DEVICES] (Op.Amp.)

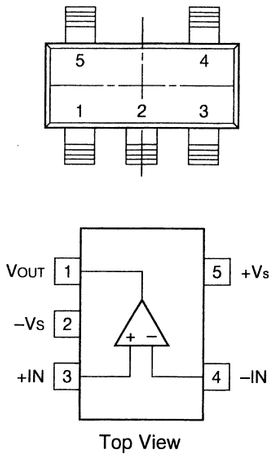

■ AD9057BRS-60-X [ANALOG DEVICES] (8bit A/D Converter)

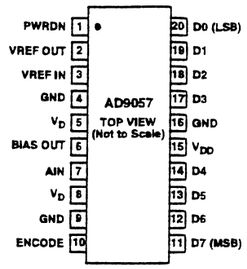

(Top View)

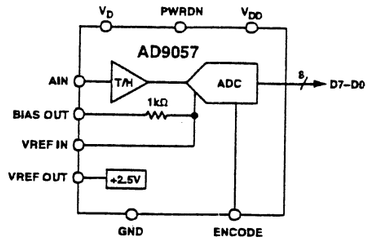

■ AK4518-VF-X [ASAHIKAEI] (16 bit A/D, D/A Convertor for Audio Signal)

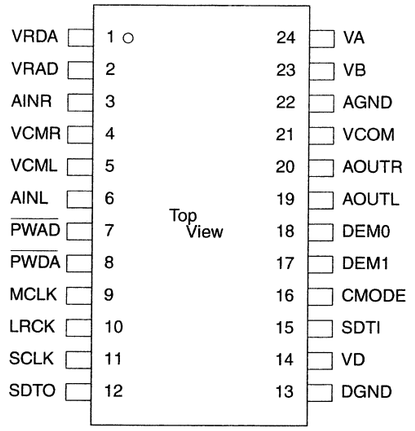

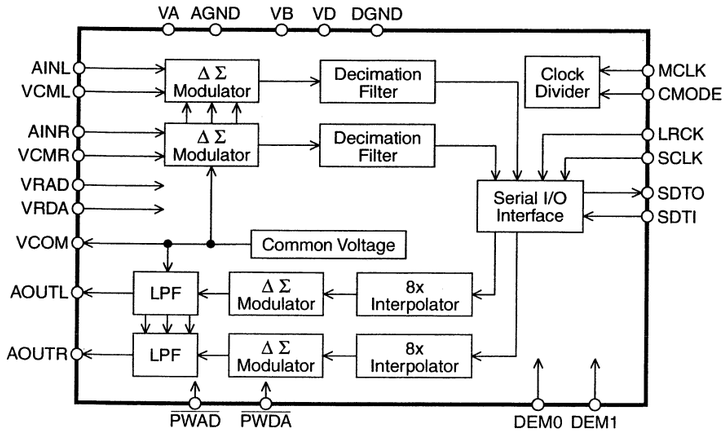

■ ADS933Y-X [BURR-BROWN] (10bit 20MHz A/D Convertor for Video Signal)

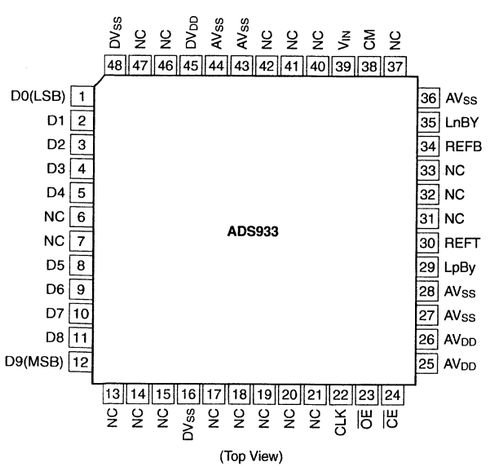

(Top View)

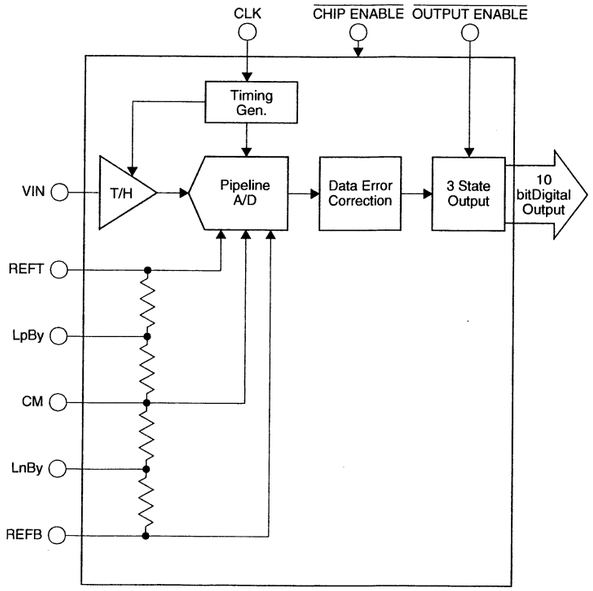

■ AN3731FHQ [MATSUSHITA] (Pre/Rec Amp.)

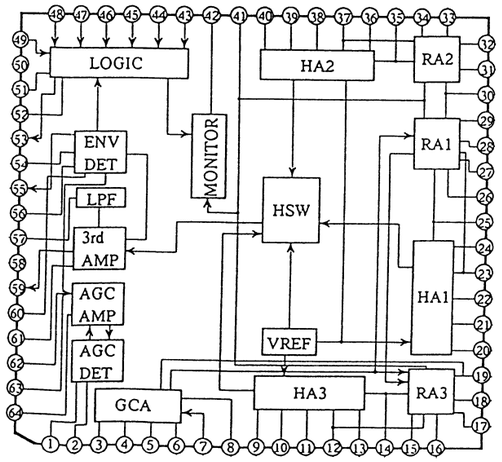

■ AN3741FAP-A [MATSUSHITA] (Playback Equalizer)

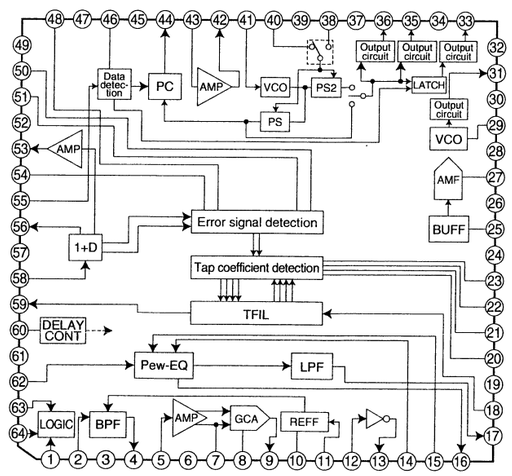

4-50

■ AN77L03M-X [MATSUSHITA]
(Voltage Regulator)

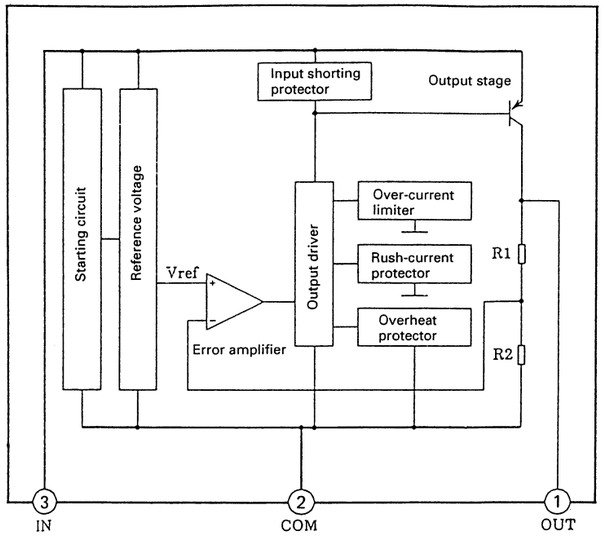

■ AN77L05M-X [MATSUSHITA]
(Voltage Regulator)

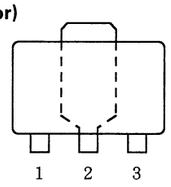

(Top View)

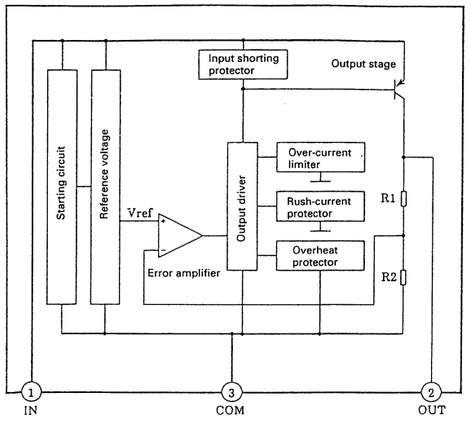

■ BA6138F-X [ROHM]
(Audio Level Detector)

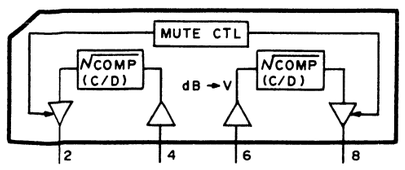

■ BA3314F-X [ROHM]
(Dual Pre-Amp.for Audio Signal)

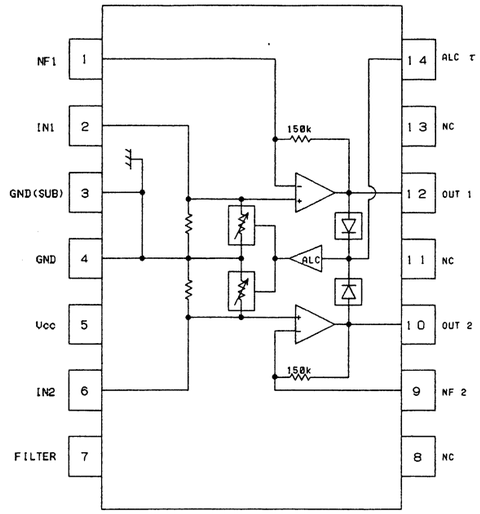

(Top View)

■ BH7086KV [ROHM]
(4 Channel VCO for DVC format)

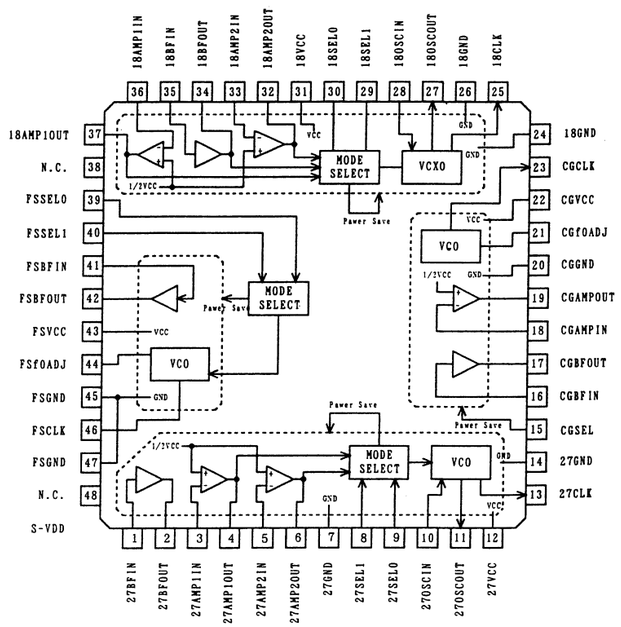

■ BA6254FS-X [ROHM]
(Motor Driver)

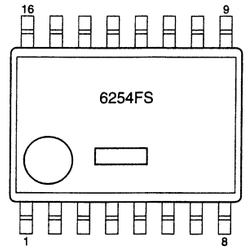

(Top View)

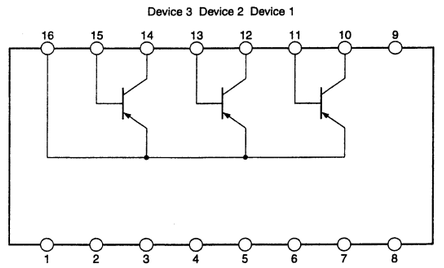

■ BA6417F-X [ROHM]
(Reversible Motor Driver)

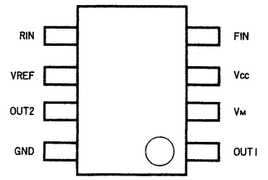

Top view

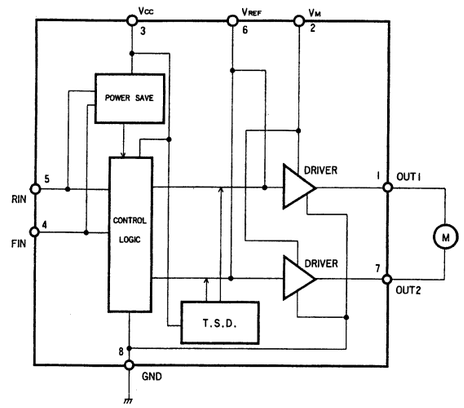

■ BU4094BCFV-X [ROHM]
(8-Stage Shift/Store Register)

(Top View)

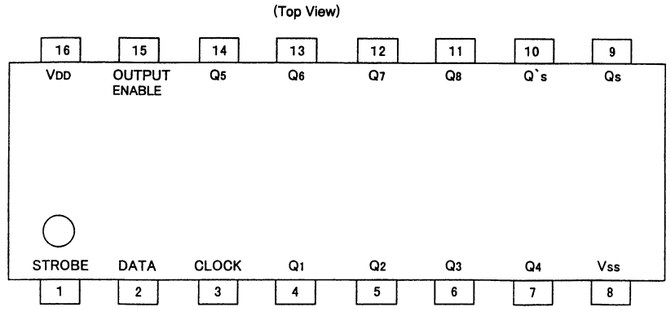

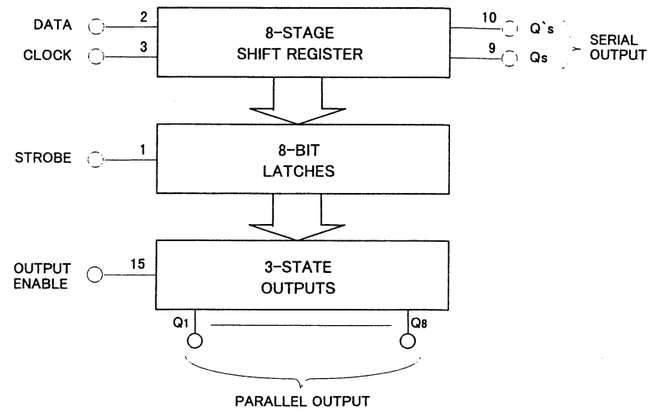

4-51

■ BA6865KV [ROHM]
(Motor Driver Controller)

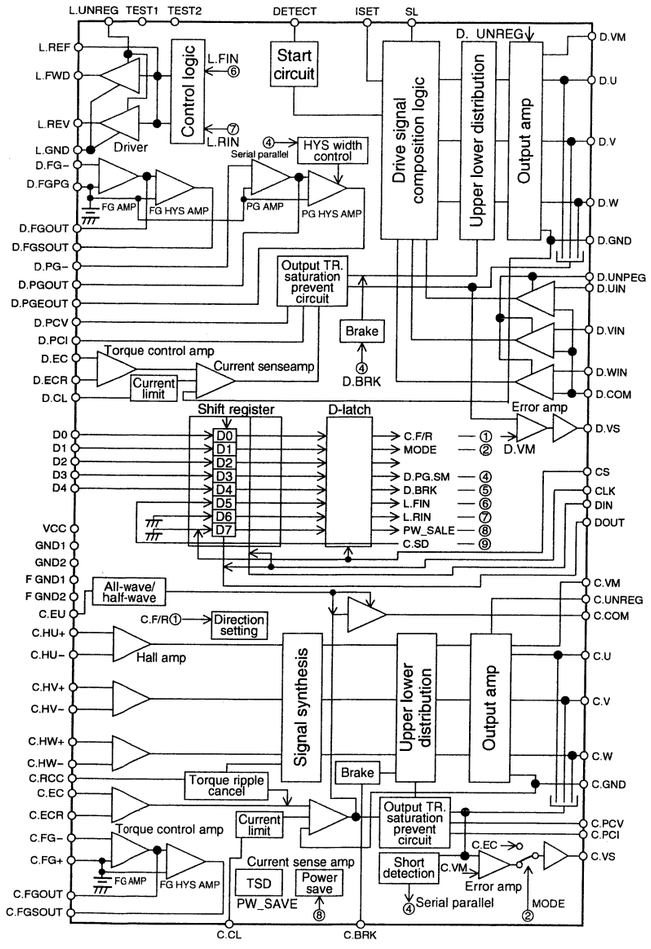

■ CLC450AJM5-X [NATIONAL SEMICONDUCTOR]
(Current Feedback Amplifier)

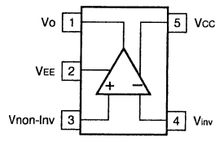

Top View

■ BA9738KV [ROHM]
(6 Channel Switching Regurator Controller)

(Top View)

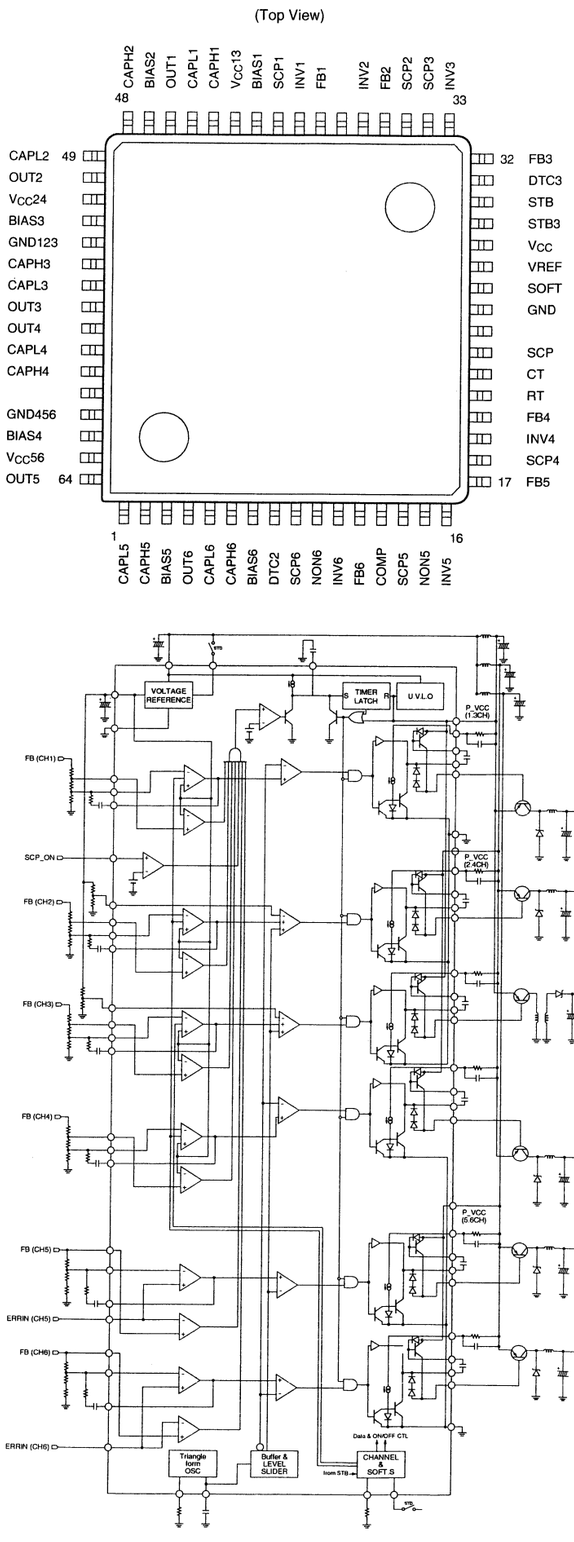

■ CXA1439M-X [SONY]
(Correlated Double Sampling)

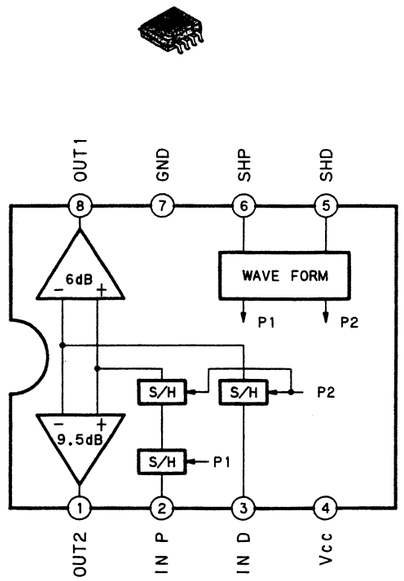

■ CXD2309Q-X [SONY]
(10 Bit 50MSPS 3 Channel D/A Converter)

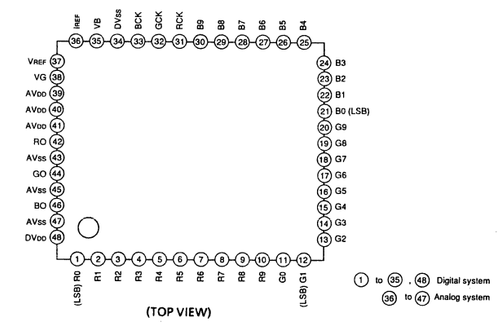

(TOP VIEW)

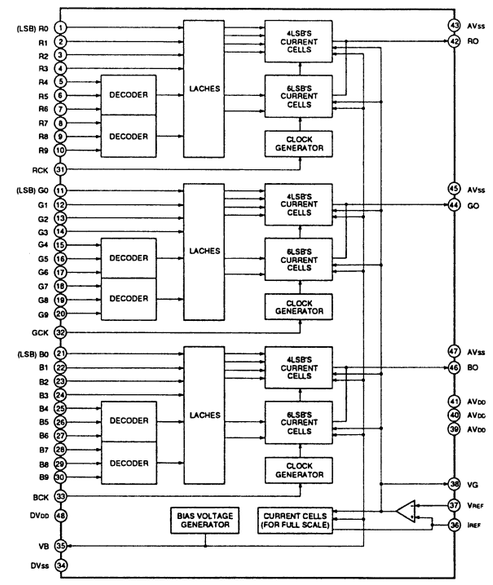

4-52

■ CXD1265R [SONY]
(CCD Camera Timing Generator)

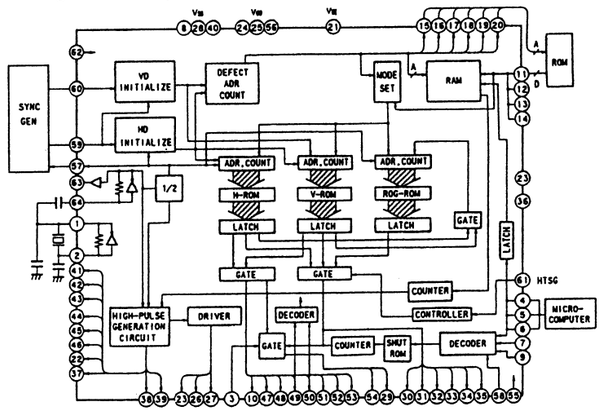

Pin Description

Pin No.	Symbol	I/O	Description
1	OSCO	O	Inverter output for oscillation.
2	OSCI	I	Inverter input for oscillation.
3	EF	I	Input mode select for defect compensation data. (With pull-up resistance) High: External ROM used, Low: Serial input from microcomputer
4	ED0	I	Shutter speed setting. Strobe input for serial mode. (With pull-up resistance)
5	ED1	I	Shutter speed setting. Clock input for serial mode. (With pull-up resistance)
6	ED2	I	Shutter speed setting. Data input for serial mode. (With pull-up resistance)
7	SMD1	I	Shutter mode setting. (With pull-up resistance)
8	Vss	–	GND
9	SMD2	I	Shutter mode setting. (With pull-up resistance)
10	XVCT	O	External ROM power supply control.
11	D1	I	When using external ROM, data input. (With pull-down resistance) When not using, Low: No defect compensation; High: Defect compensation enabled.
12	D2	I	When using external ROM, data input. (With pull-down resistance) When not using, Low: Color; High: Black-and-white.
13	D3	I	When using external ROM, data input. (With pull-down resistance) When not using, fixed at Low.
14	D4	I	When using external ROM, data input. (With pull-down resistance) When not using, Low: NTSC; High: PAL.
15	A5	O	External ROM address output.
16	A4	O	External ROM address output.
17	A3	O	External ROM address output.
18	A0	O	External ROM address output.
19	A1	O	External ROM address output.
20	A2	O	External ROM address output.
21	VEE	–	GND
22	RG	O	Reset gate pulse output.
23	LH1	–	CCD horizontal register final-step clock output.
24	VDD	–	Power supply.
25	VDD	–	Power supply for H1 and H2.
26	H1	O	Clock output for CCD horizontal register.
27	H2	O	Clock output for CCD horizontal register.
28	Vss	–	GND for H1 and H2.
29	XSUB	O	CCD discharge pulse output.
30	XV2	O	Clock output for CCD vertical register.
31	XV1	O	Clock output for CCD vertical register.
32	XSG1	O	CCD sensor charge readout pulse output.
33	XV3	O	Clock output for CCD vertical register.
34	XSG2	O	CCD sensor charge readout pulse output.
35	XV4	O	Clock output for CCD vertical register.
36	TEST2	I	Test input. Set Low in normal operation.
37	CLD	O	4 fsc clock output.
38	XSHP	O	Pulse for sample-and-hold of pre-charge level.
39	XSHD	O	Data sample-and-hold pulse.
40	Vss	–	GND

Pin Description

Pin No.	Symbol	I/O	Description
41	XSP1	O	Color separation sample-and-hold pulse. Halted for black-and-white mode.
42	XSP2	O	Color separation sample-and-hold pulse. Halted for black-and-white mode.
43	XSH1/ SHP	O	Switching sample-and-hold pulse/pre-charge level sample-and-hold pulse (black-and-white mode)
44	XSH2/ SHD	O	Switching sample-and-hold pulse/data sample-and-hold pulse (black-and-white mode)
45	XDL1	O	Delay line clock output. Halted for black-and-white mode.
46	XDL2	O	Delay line clock output. Halted for black-and-white mode.
47	BFG	O	Pulse output for chroma modulator in encoder. When GM is set at High, defect indicator pulse output. Halted for black-and-white mode.
48	CLP1	O	Clamp pulse output.
49	CLP2	IO	Clamp pulse output. When GM is set at High, standby mode switching input.
50	CLP3	IO	Clamp pulse output. When GM is set at High, standby mode switching input.
51	CLP4	O	Clamp pulse output.
52	PBLK	O	Blanking cleaning pulse output.
53	ID	O	Line identification output. Halted for black-and-white mode.
54	WEN	O	Write enable output for low-speed shutter operation.
55	GM	I	Low: Analog signal processing; High: Digital signal processing. (With pull-down resistance)
56	VDD	–	Power supply.
57	CL	O	4 fsc clock output.
58	PS	I	Switching for electronic shutter speed input method. (With pull-up resistance)Low: Serial input; High: Parallel input
59	HD	I	Horizontal synchronizing signal input.
60	VD	I	Vertical synchronizing signal input. (Low period is 9H for NTSC/EIA and 7.5H for PAL/CCIR.)
61	HTSG	I	Control input for XSG1and XSG2. (With pull-up resistance) Low: XSG1, XSG2 halted; High: XSG1, XSG2 generated.
62	TEST	I	Test input. Set at Low during normal operation. (With pull-down resistance)
63	XCK	O	8 fsc clock output.
64	CK	I	8 fsc clock input

Time Chart (1) < NTSC vertical direction > (However, ID halted for black-and-white mode)

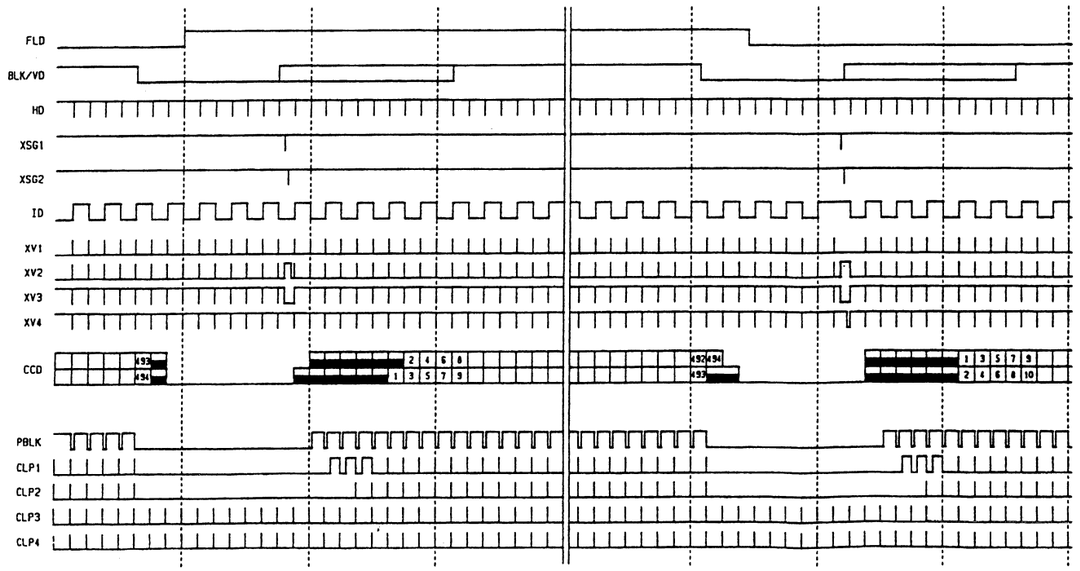

4-53

Time Chart (2) **< PAL vertical direction >** (However, ID halted for black-and-white mode)

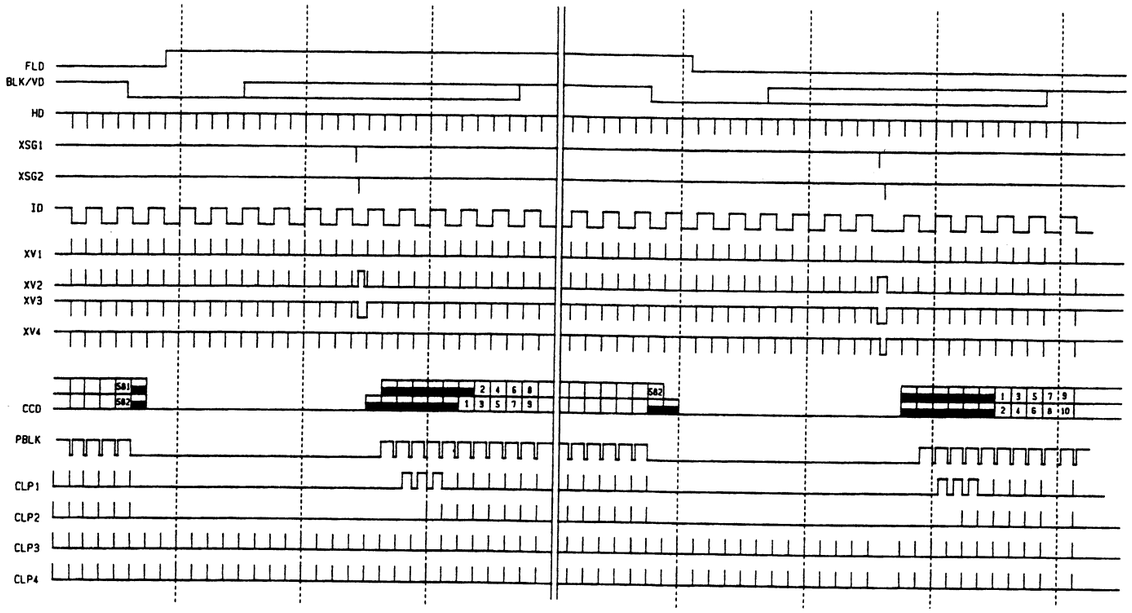

Time Chart (3) **< NTSC horizontal direction >** Analog color (GM=L, D2=L, TEST2=L)

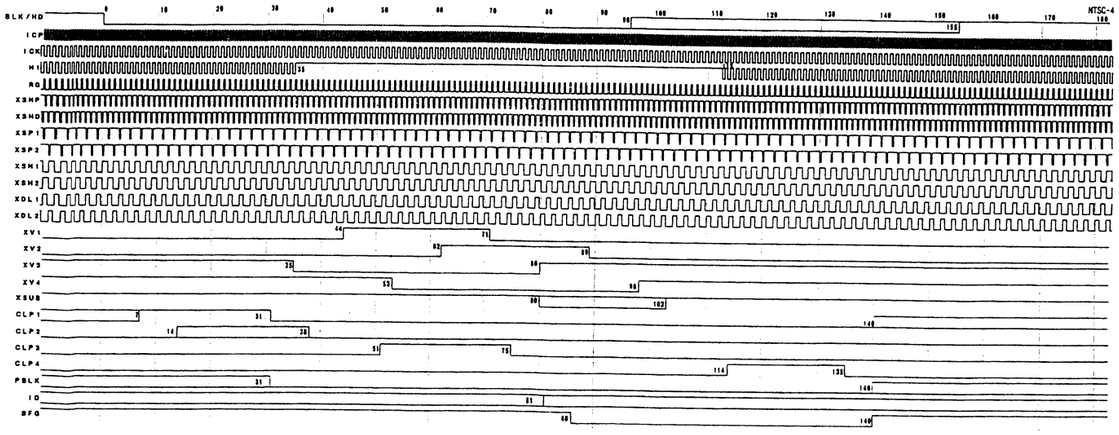

Time Chart (4) **< NTSC horizontal direction >** Digital color 1 (GM=H, D2=L, TEST2=L)

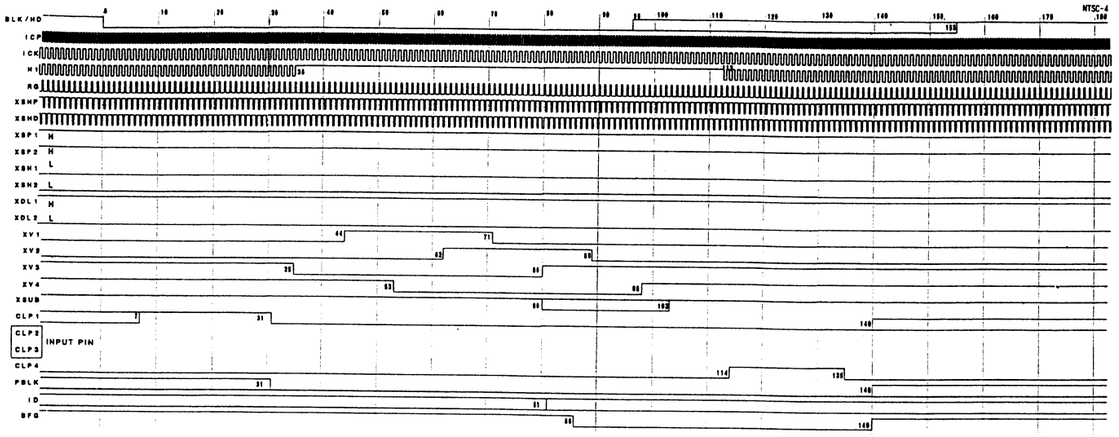

Time Chart (5) **< NTSC horizontal direction >** Digital color 2 (GM=H, D2=L, TEST2=H)

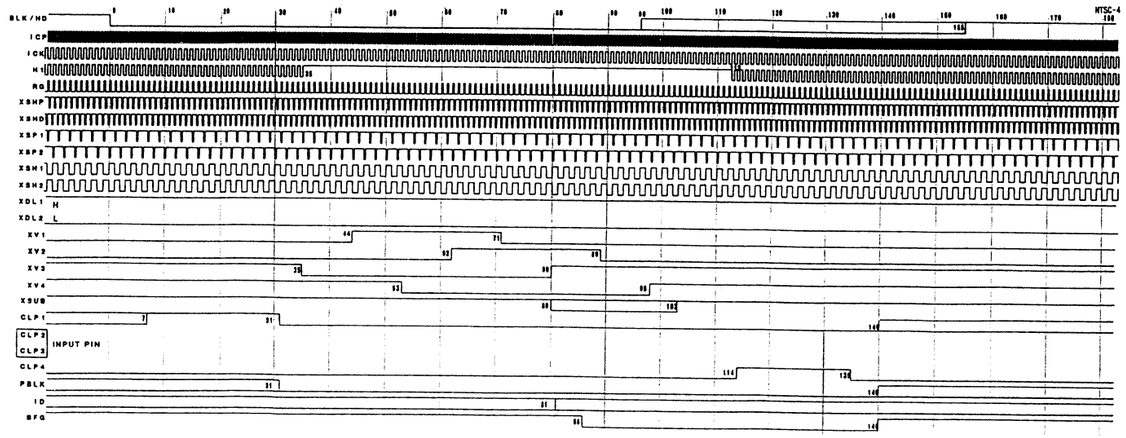

■ DS8921M-X [NATIONAL SEMICONDUCTOR] (Differential Line Driver and Receiver Pair)

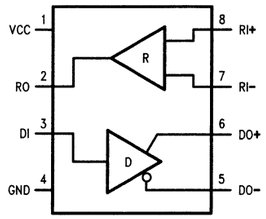

(Top View)

Truth Table

Receiver		Driver		
Input	V_{OUT}	Input	V_{OUT}	$\overline{V_{OUT}}$
$V_{ID} \geq V_{TH}$ (MAX)	1	1	1	0
$V_{ID} \leq V_{TH}$ (MIN)	0	0	0	1
Open	1			

■ DS90LV017M-X [NATIONAL SEMICONDUCTOR] (LVDS Single High Speed Differential Driver)

Dual-In-Line

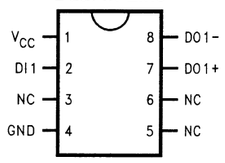

(Top View)

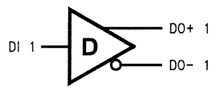

■ DS90LV018ATM-X [NATIONAL SEMICONDUCTOR] (3V LVDS Single CMOS Differential Line Receiver)

Dual-in-Line

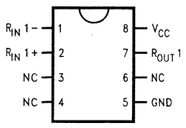

(Top View)

Functional Diagram

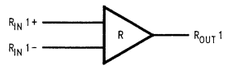

Truth Table

INPUTS	OUTPUT
$[R_{IN}+] - [R_{IN}-]$	R_{OUT}
$V_{ID} \geq 0.1V$	H
$V_{ID} \leq -0.1V$	L
Full Fail-safe OPEN/SHORT or Terminated	H

■ EP20K160EQC2083 [ALTERA] (Programmable Logic Device)

Device Block Diagram

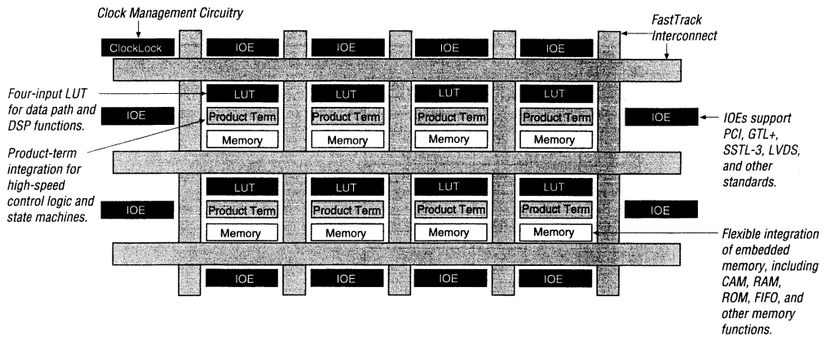

Logic Element

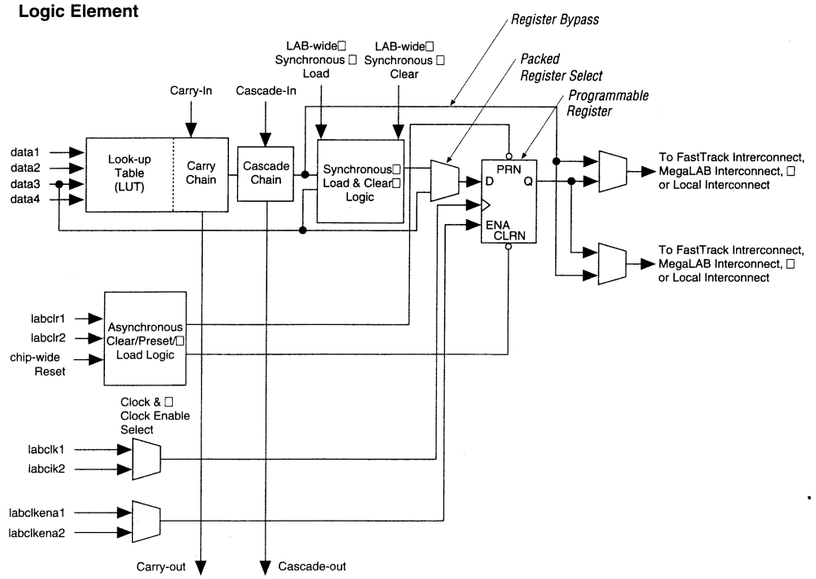

■ EPC2TC32-004 [ALTERA] (Refer to EPC2TC32-003.)

■ EPM064ST-10-013 [ALTERA] (Refer to EPM064ST-10-012.)

■ IS62C256-70U-X [INTEGRATED SILICON SOLUTION] (32Kx8LOW POWER CMOS STATIC RAM)

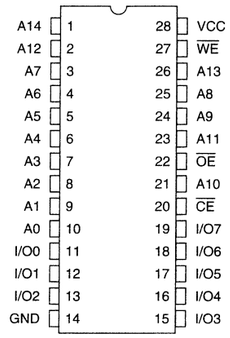

(Top View)

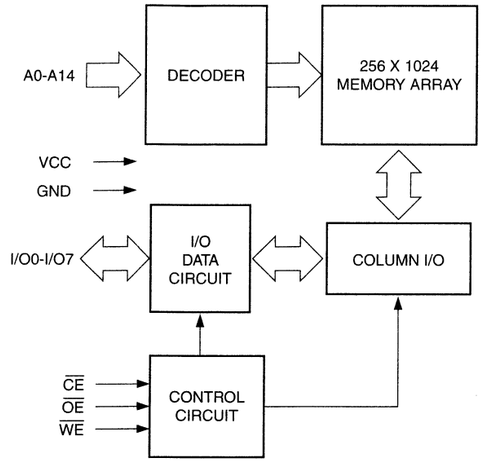

■ EPC2TC32-003 [ALTERA] (Programmable Logic Device)

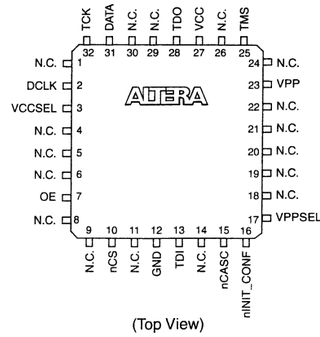

(Top View)

Block Diagram

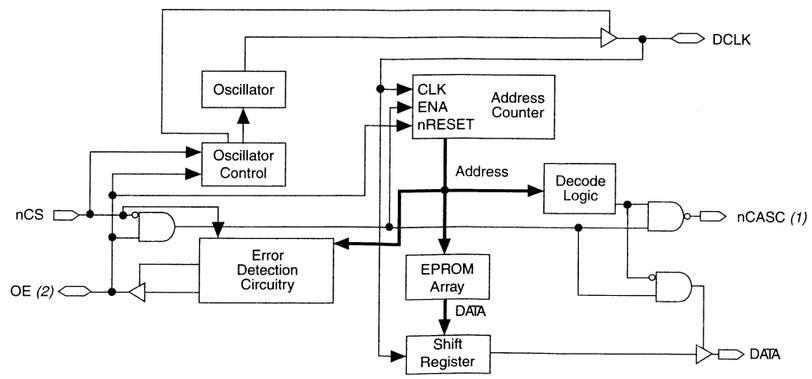

4-55

■ EPM064ST-10-012 [ALTERA]
(Programmable Logic Device)

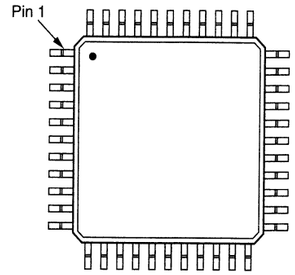

(Top View)

Block Diagram

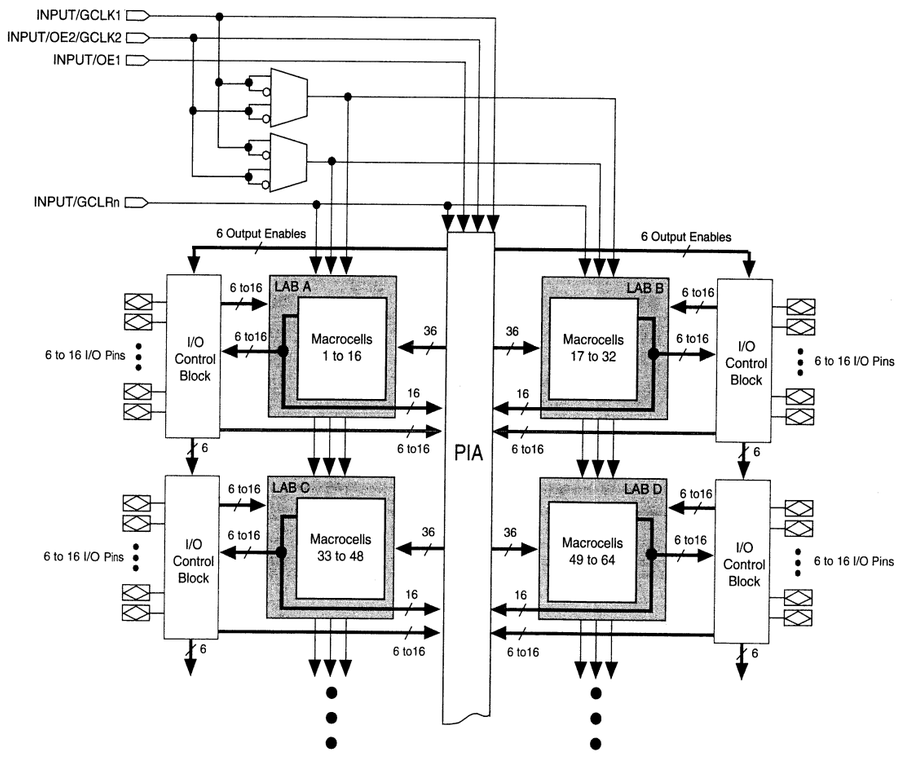

■ EPM3032AT10-001 [ALTERA]
(See EPM064ST-10-012.)

■ EPM3032AT10-002 [ALTERA]
(See EPM064ST-10-012.)

■ JCS0027 [JVC]
(SSG)

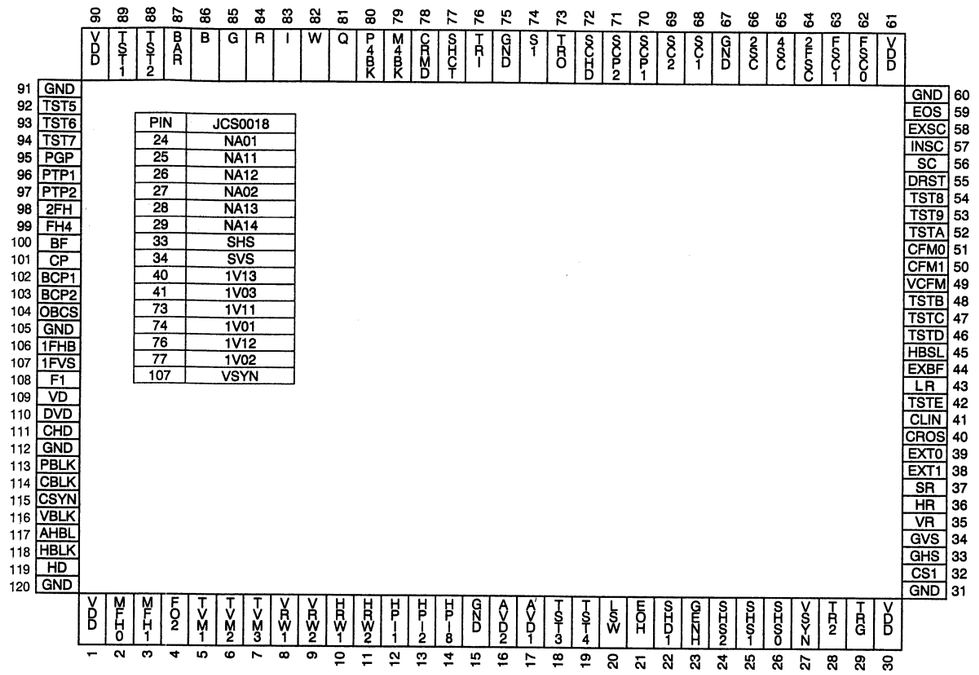

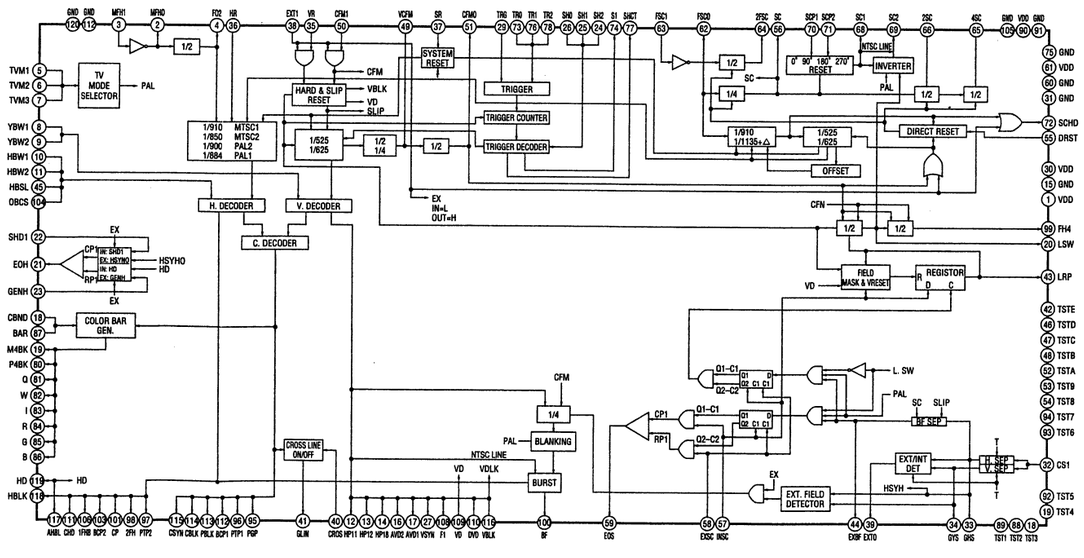

Terminal Specifications of JCS0027 (4th Revision)

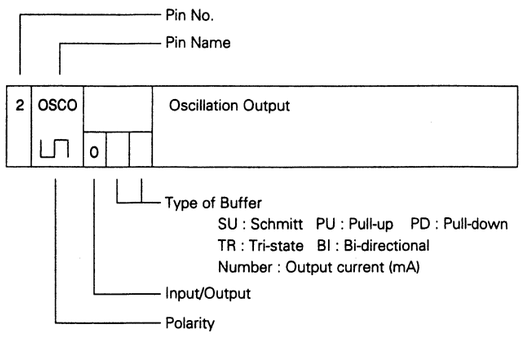

Pin No.	Pin Name	Function
1	VDD	+5 Power supply
2	MFHO	Synchronizing oscillation output Output terminal for built-in oscillator 0
3	MFHI	Synchronizing oscillation input Input terminal for built-in oscillator I
4	F02	1/2 divided output 1/2 divided output of synchronizing oscillator 0 9
5	TVM1	TV mode 1 I PU
6	TVM2	TV mode 2 I PU
7	TVM3	TV mode 3 I PU
8	VBW1	V. blanking control 1 I PU
9	VBW2	V. blanking control 2 I PU
10	HBW1	H. blanking control 1 I PU
11	HBW2	H. blanking control 2 I PU

	NTSC1 1820FH	NTSC2 1716FH	PAL2 1816FH	PAL1 1728FH	PALM 1716FH	SECAM 1716FH
TVM1	L	H	L	H	L	H
TVM2	L	L	H	H	L	L
TVM3	L	L	L	L	H	H

VBW1	L	H	L	H
VBW2	L	L	H	H
NTSC1	21H	20H	19H	18H
NTSC 2	21H	20H	19H	18H
PAL1	26H	25H	24H	23H
PAL2	26H	25H	24H	23H
PALM	21H	20H	19H	18H
SECAM	26H	25H	24H	23H

HBW1	L	H	L	H
HBW2	L	L	H	H
NTSC1	157T	156T	154T	152T
NTSC2	143T	147T	146T	152T
PAL1	162T	159T	156T	153T
PAL2	170T	167T	164T	161T
PALM	148T	147T	146T	144T
SECAM	162T	159T	156T	153T

Pin No.	Pin Name	Function
12	HP11	H. pulse 11 H. pulse to be active at 11H, 13H, 15H and 17H. 0 9
13	HP12	H. pulse 12 H. pulse to be active at 12H and 14H. 0 9
14	HP18	H. pulse 18 H. pulse to be active at 18H. 0 9
15	GND	Ground
16	AVD2	Pre-vertical drive pulse 2 Vertical drive pulse whose phase is 8H ahead of VD pulse. Functions as subcarrier blanking for SECAM system. 0 9
17	AVD1	Pre-vertical drive pulse 1 Vertical drive pulse whose phase is 1H ahead of VD pulse. 0 9
18	TST3	Test terminal 3 Set this terminal open in general. I PU
19	TST4	Test terminal 4 Set this terminal open in general. I PU
20	LSW	Line switch Half-divided FH output. Switches color difference signal of neighboring lines by 180° in phase for PAL system. 0 9
21	EOH	H. synchronizing digital phase comparison output As compared with leading edge of SHDI; when internal HD has advanced phase: Low level, when internal HD has lagged phase: High level, when internal HD is in-phase: High impedance. 0 TR 13
22	SHDI	H. synchronizing digital phase comparison input (trailing detection) Input of horizontal drive signal originating from subcarrier. Active when EXTI is low level. When this is inactive, GHS (No. 33) is internally connected. I SH PU
23	GENH	H. synchronizing digital phase comparison input (trailing detection) Input for external synchronization, horizontal synchronization and phase adjustment. Active when EXTI is high level. When this is inactive, HD (No. 119) is internally connected. I SH PU

Pin No.	Pin Name	Function
24	SHS2	Shutter speed setting 2 Random shutter setting function (Refer to the specifications.) I PU
25	SHS1	Shutter speed setting 1 Random shutter setting function (Refer to the specifications.) I PU
26	SHS0	Shutter speed setting 0 Random shutter setting function (Refer to the specifications.) I PU
27	VSYN	V. sync. output Vertical synchronizing signal of V. EQ pulse width. 0 9
28	TR2	Sync. reset mode setting For sync. reset mode setting when random shutter setting functions is activated. I PU
29	TRG	Trigger input Trigger input to activate random shutter setting function. (Refer to the random shutter specifications.) I PU
30	VDD	+5V power supply
31	GND	Ground
32	CSI	Ext. composite sync. signal input To input external composite synchronizing signal for horizontal and vertical separation and ext. sync. signal input detection. I SH PU
33	GHS	Horizontal separate sync. Horizontal separate signal of external composite synchronizing signal. 1/2 equivalent pulse is not included. 0 9
34	GVS	Vertical separate sync. Vertical separate signal of external composite synchronizing signal. 1/2 equivalent pulse is not included. 0 9

SHS2	SHS1	SHS0	Shutter speed NTSC	Shutter speed PAL
L	L	L	1/60	1/50
L	L	H	1/100	1/120
L	H	L	1/250	
L	H	H	1/500	
H	L	L	1/1000	
H	L	H	1/2000	
H	H	L	1/4000	
H	H	H	1/10000	

Pin No.	Pin Name	Function
35	VR	Vertical reset External synchronizing input by slip system. If this system is input in vertical sync. period, hard reset is activated. Input in other period stops internal counter for a period of pulse width. I PU
36	HR	Horizontal reset Presets horizontal component 1T before rise of HD. Jitters in a period shorter than 140 ns are absorbed. However, operation is not secured for continuous input. I PU
37	SR	System reset Inside of IC is forcibly initialized regardless of internal or external synchronization. VR and HR inputs are ineffective. Jitters in a period shorter than 140 ns are absorbed. I PU
38	EXTI	Internal/External synchronization setting input L : Internal synchronization H : External synchronization I PD
39	EXTO	Internal/External synchronization setting output L: Without CSI input After detection of no SHS, another SHS is not detected for a period of 8 fields. H: With CSI input After detection of SHS, 200 or more SHS's are detected in 1 vertical period. 0 9
40	CROS	Cross ON/OFF input L: To stop cross output H: To activate cross output operation For detail, refer to supplementary specifications of respective terminals. I PD
41	CLIN	Cross output To output a cross in the center of screen. For detail, refer to supplementary specifications of respective terminals. 0 9
42	TSTE	Test terminal E Set this terminal open in general. I PU
43	LR	Line reset When EXTI is external synchronization (High level), setting signal is supplied to LSW. When internal burst is ahead of external burst in phase, High level is output. When internal burst is behind external burst in phase, Low level is output (for 6 clocks of SC). Phase comparison is not operated for one field after output. For detail, refer to supplementary specifications of respective terminals. 0 9

4-57

Pin No.	Pin Name	Function
44	EXBF	Brust flag separate output With detection of one or more H. sync pulse from CSI input, pulse whose width is for 6 cycles of subcarrier is output. For details, refer to supplementary specifications of respective terminals. O 9
45	HBSL	H. blanking reset To switch output position of IFHB (106). L: System delay 900 ns approx. H: System delay 450 ns approx. I PU
46	TSTD	Test terminal D Set this terminal open in general. BI PU 9
47	TSTC	Test terminal C Set this terminal open in general. BI PU 9
48	TSTB	Test terminal B Set this terminal open in general. I PU
49	VCFM	VTR color frame Color frame for VTR exclusively. 2-field period for NTSC1, NTSC2 and PAL. 4-field period for PAL1, PAL2 and SECAM. O 9
50	CFMI	Color frame input Effective with EXTI being low level. Used for color frame control in external synchronization. Reset to synchronizing circuit by the slip system. I SH PU
51	CFMO	Color frame output Pulse output at the beginning of every color frame. 4-field period for NTSC1 and NTSC2. 8-field period for PAL1, PAL2, PALM and SECAM. O 9
52	TSTA	Test terminal A Set this terminal open in general. I PU
53	TST9	Test terminal 9 Set this terminal open in general. I PU
54	TST8	Test terminal 8 Set this terminal open in general. I PU
55	DRST	Direct reset terminal When EXTI is low level, the following operations are realized. To switch reset operation of horizontal counter for subcarrier. To reset color frame synchronizing with horizontal counter with High level; To reset color frame with Low level. I PU
56	SC	Subcarrier output To monitor subcarrier signal connected internally with digital phase comparator. When phase of SC1 (68) is 0°, this output is inphase. O 9
57	INSC	Internal subcarrier input Shall be connected with SC (56). Effective when EXBF is low level. Pulse rise is detected. I
58	EXSC	External subcarrier input Effective when EXBF is low level. Pulse rise is detected. I
59	EOS	Digital phase comparison output for subcarrier As compared with leading edge of EXSC; when internal SC has advanced phase : Low level, when internal SC has lagged phase : High level, when internal SC is in phase : High impedance. O TR 13
60	GND	Ground
61	VDD	+5V power supply
62	FSCO	Oscillator output for subcarrier O
63	FSCI	Oscillator input for subcarrier I
64	2FSC	Double subcarrier output Half-divided oscillator output for subcarrier O 13

Pin No.	Pin Name	Function
65	4SC	1/4 subcarrier output 1/4-divided output of subcarrier frequency O 9
66	2SC	1/2 subcarrier output 1/2-divided output of subcarrier frequency O 9
67	GND	Ground
68	SC1	Subcarrier 1 Subcarrier frequency output. Phase is changed by SCP1 and SCP2. In PAL mode, phase is not changed every H. O 9
69	SC2	Subcarrier 2 Subcarrier frequency output whose phase is 90° ahead of SC1. Phase is changed by SCP1 and SCP2. In PAL mode, phase is inverted by 180° every H. O 9
70	SCP1	Subcarrier select 1 Note: SC2 is expressed based on SC1. I PD
71	SCP1	Subcarrier select 2 I PD
72	SCHD	Subcarrier horizontal driver Horizontal drive pulse originating from subcarrier frequency. O 13
73	TR0	Random shutter control system setting input To set random shutter control system. L: 8-stage default control, H: Pulse width continuous control (Refer to the specifications of random shutter setting function.) I PD
74	SI	Stroboscope index output In normal operation, this output is for stroboscopic lamp emitting time. In random shutter operation, this output is for video output time. (Refer to the specifications of random shutter setting function.) O 9

SCP2	SCP1	SC1	SC2
L	L	0°	90° ahead (270°)
L	H	90°	90° ahead (0°)
H	L	180°	90° ahead (90°)
H	H	270°	90° ahead (180°)

Pin No.	Pin Name	Function
75	GND	Ground
76	TR1	Random reset system setting input To determine reset system setting system. L: SYNC reset system, H: SYNC non-reset system. (Refer to the specifications of random shutter setting function.) I PD
77	SHCT	Shutter control output Electronic shutter control signal. Shall be connected to SHCT (19) of TG (μPD9438GK). (Refer to the specifications of random shutter setting function.) O 9
78	CBMD	SMPTE/FULL To switch color bar signal to SMPTE or FULL. L: Full Field mode H: SMPTE mode — Effective only with BAR signal of low level. I PU
79	M4BK	Color bar signal o 9
80	P4BK	Color bar signal o 9
81	Q	Color bar signal o 9
82	W	Color bar signal o 9
83	I	Color bar signal o 9

	BAR	CBMD	I	W
NTSC1 NTSC2	H L L	X H L	L Effective L	L Effective (75%W) L
PAL1 PAL2	H L L	X H L	L Effective L	L Effective (75%W) Effective (100W)
PALM	H L L	X H L	L Effective L	L Effective (75%W) Effective (100W)
SECAM	H L L	X H L	L Effective L	L Effective (75%W) L

	Q	P4BK	M4BK
NTSC1 NTSC2	L Effective L	L Effective L	L Effective L
PAL1 PAL2	L Effective L	L Effective L	L Effective L
PALM	L Effective L	L Effective L	L Effective L
SECAM	L Effective L	L Effective L	L Effective L

Pin No.	Pin Name	Function
84	R	Color bar signal 0 9
85	G	Color bar signal 0 9
86	B	Color bar signal 0 9

	BAR	C3MD	B	G	R
NTSC1	H	X	L	L	L
NTSC2	L	X	Effective	Effective	Effective
PAL1	H	X	L	L	L
PAL2	L	X	Effective	Effective	Effective
PALM	H	X	L	L	L
	L	X	Effective	Effective	Effective
SECAM	H	X	L	L	L
	L	X	Effective	Effective	Effective

Pin No.	Pin Name	Function
87	BAR	Color bar control (ON/OFF) I PU

BAR	R, G, B, I, Q, W, P4BK, M4BK
L	Effective
H	Fixed at Low level

Pin No.	Pin Name	Function
88	TST2	Test terminal 2 Set this terminal open in general. I PU
89	TST1	Test terminal 1 Set this terminal open in general. I PU
90	VDD	+5V power supply
91	GND	Ground
92	TST5	Test terminal 5 Set this terminal open in general. I PU
93	TST6	Test terminal 6 Set this terminal open in general. I PU
94	TST7	Test terminal 7 Set this terminal open in general. 0 9
95	PGP	Pilot gate pulse Uniform voltage level of two signals, one passes the 1FH delay line and the other does not pass the 1H line, with each other in order to compensate attenuation caused by the delay line. 0 9
96	PTP1	Pilot pulse 1 Uniform voltage level of two signals, one passes the 1H delay line and the other does not pass the 1H line, with each other in order to compensate attenuation caused by the delay line. 0 9
97	PTP2	Pilot pulse 2 Used to control video level. 0 9
98	2FH	Double FH 0 9

NTSC1	NTSC2	PAL1	PAL2	PALM	SECAM
31.468	31.468	31.25	31.25	31,468	31.25

Pin No.	Pin Name	Function
99	FH4	1/4FH Half-divided output of LSW. Equivalent to 25 Hz in PAL mode. 0 9
100	BF	Burst flag Regulates period to insert subcarrier into back porch of horizontal sync. signal. Functions to switch chromaticity signal for every line in SECAM mode. 0 9
101	CP	Clamp pulse Signal to clamp reference voltage of black level. 0 9
102	BCP1	Black clamp pulse 1 Fixes black level of CCD output signal. 0 9
103	BCP2	Black clamp pulse 2 Fixes black level of CCD output signal (at every H output). 0 9
104	OBCS	Optical black pulse select Switching of output position of horizontal BCP1 and BCP2. L: Frontward output H: Backward output I PU
105	GND	Ground
106	IFHB	Interface horizontal blanking Output pulse that is narrower than HBLK both in leading edge and trailing edge. 0 9
107	IFVS	Interface vertical synchronization Normal function: To output vertical synchronization signal having the same pulse width of V. EQ pulse. Random shutter setting function: To output the same signal as V. sync. signal in the fall time. 0 9
108	FI	Field index Field discrimination signal. L: Field that HD and VD fall at the same time. H: Field that there is a time lag of 0.5H in falling between HD and VD. 0 9
109	VD	Vertical drive pulse Pulse output at the beginning of every field. Used as the vertical timing standard for the set. 0 9
110	DVD	Delayed vertical drive pulse Vertical drive signal that lags behind VD pulse. Controls camera's scanning timing and regulates activation time of sawtooth waveform of vertical deflection circuit. 0 9
111	CHD	Delayed horizontal drive pulse Controls camera's scanning timing. Regulates activation time of sawtooth waveform of horizontal deflection circuit. 0 9
112	GND	Ground
113	PBLK	Pre-blanking Composite blanking signal used for video processing. As compared with CBLK signal, this signal is narrower in the leading edge. 0 9
114	CBLK	Composite blanking Horizontal and vertical composite blanking signal. 0 9
115	CSYN	Composite sync. Composite synchronizing signal comprising of four signals of HSYN, VSYN, EQ and SAW. 0 9
116	VBLK	V. blanking Vertical blanking signal whose pulse width can be changed with VBW1 and VBW2. 0 9
117	AHBL	Pre-horizontal blanking Pulse that HBLK is advanced in breaking of leading edge. 0 9
118	HBLK	H. blanking Horizontal blanking pulse whose pulse width can be changed with HBW1 and HBW2. 0 9
119	HD	H. drive Pulse synchronized with beginning of respective lines. Used as horizontal timing standard of the set. 0 13
120	GND	Ground

4-59

■ JCS0050 [JVC]
(Digital Signal Processor)

(Top View)

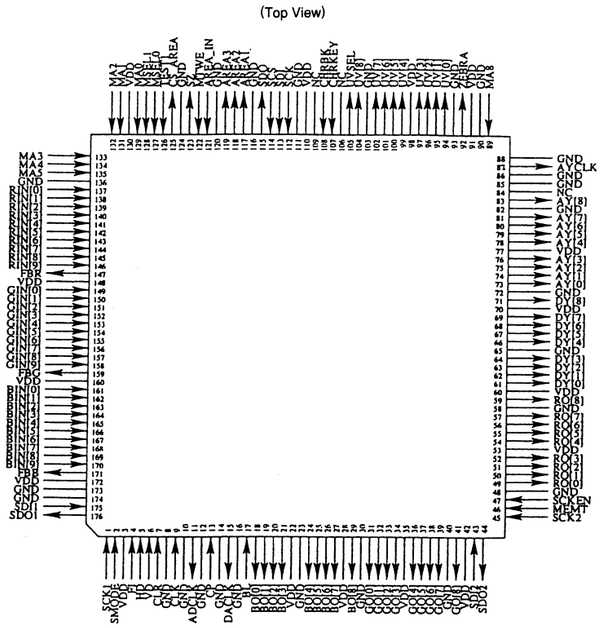

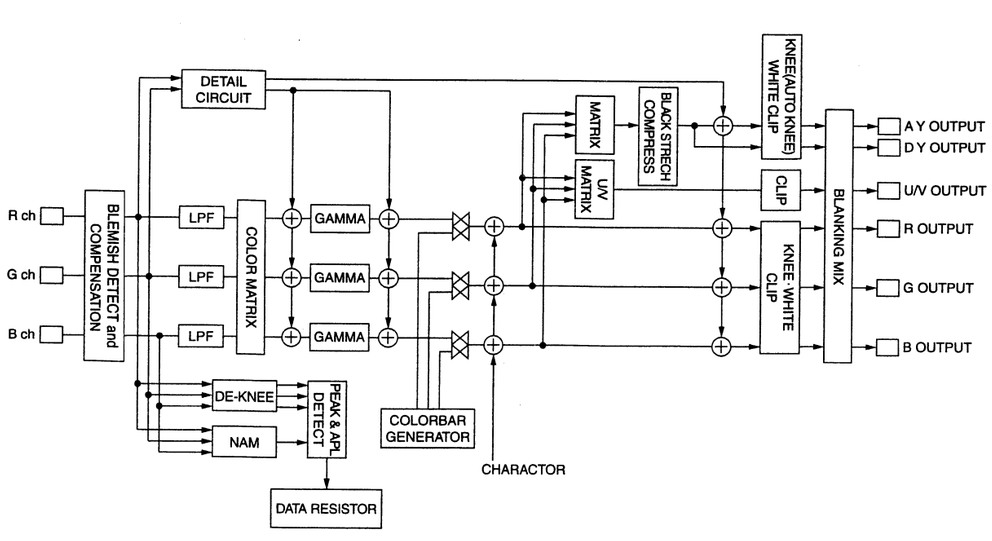

■ LM1117MP1.8-X [NATIONAL SEMICONDUCTOR]
(800mA Low-Dropout Linear Regulator)

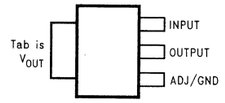

(Top View)

Block Diagram

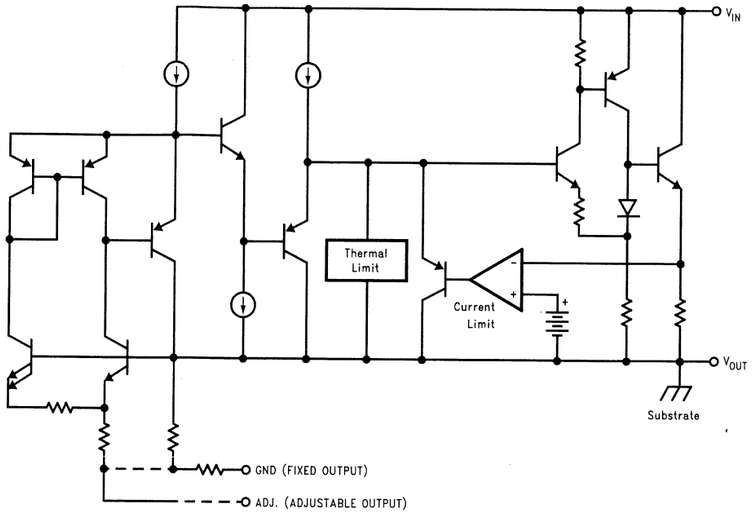

■ LMC6082IM-X [National Semiconductor]
(Precision CMOS Dual Op.Amp)

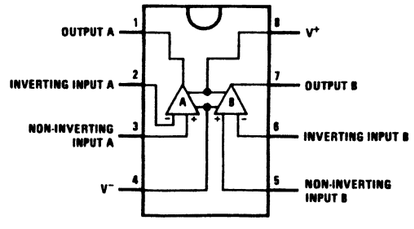

Top View

■ LP2986IMM-X [NATIONAL SEMICONDUCTOR]
(Adjustable Voltage Regulator)

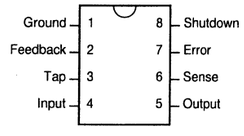

Top View

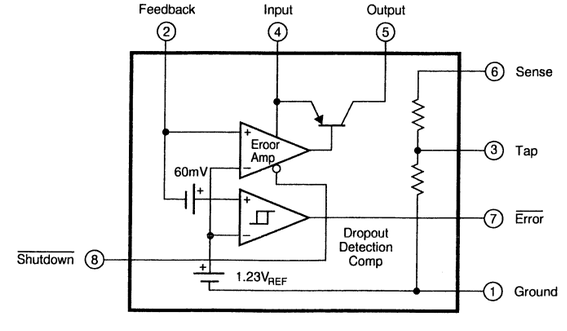

4-60

■ LM1881M-X [National Semiconductor] (Video Sync Separator)

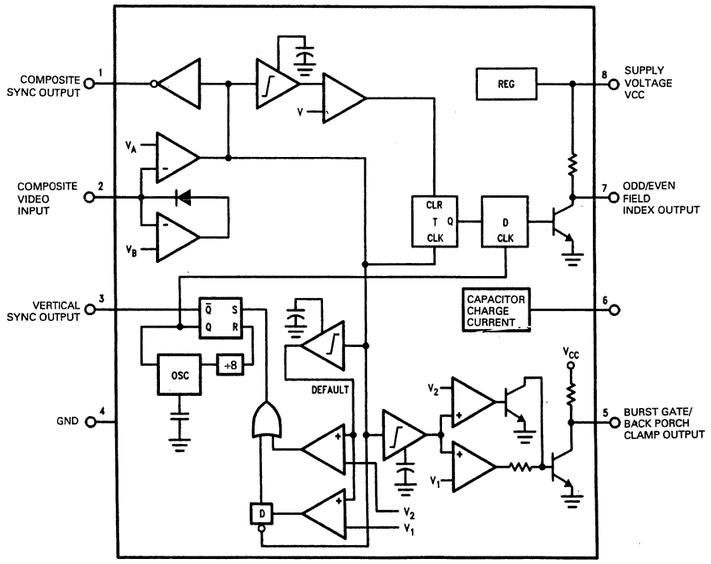

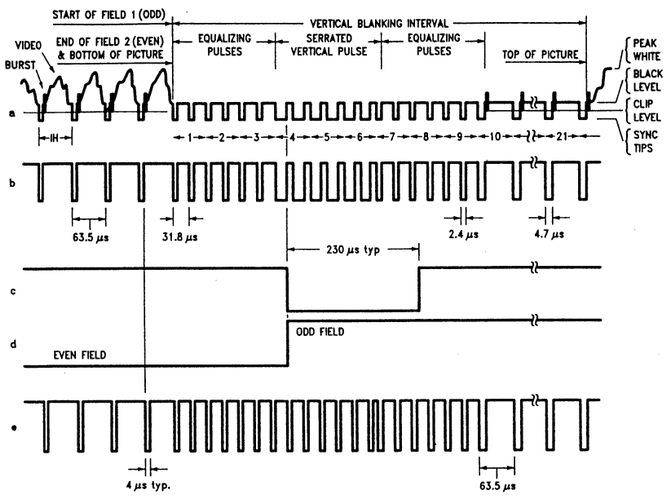

(a) Composite Video; (b) Composite Sync; (c) Vertical Output Pulse; (d) Odd/Even Field Index; (e) Burst Gate/Back Porch Clamp

■ M51957BFP-X [MITSUBISHI] (Voltage Detector/System Reset)

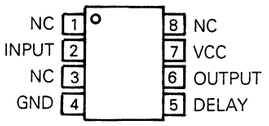

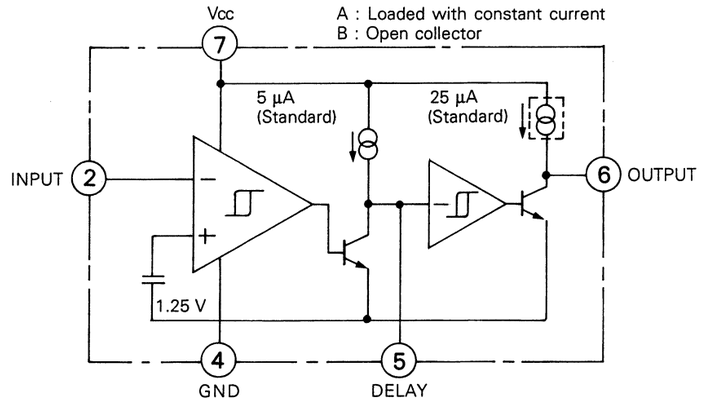

■ M5201FP-X [MITSUBISHI] (Switch Op Amp.)

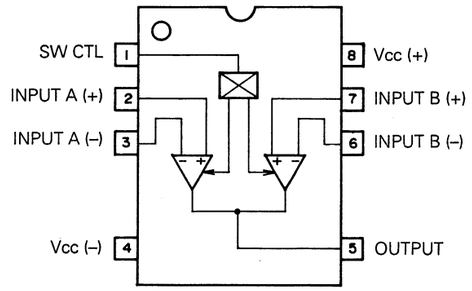

TRUE TABLE

SW CTL	OUTPUT
H	A
L	B

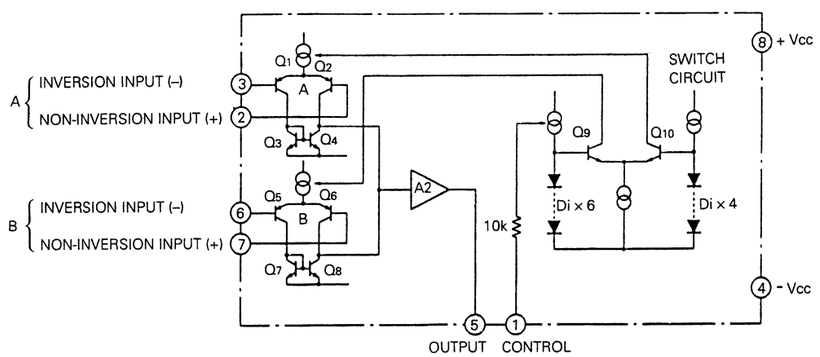

■ M5216FP-X [MITSUBISHI] (Dual Op Amp.)

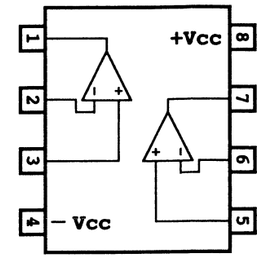

(TOP VIEW)

■ M62353GP-X [MITSUBISHI] (8-Bit 8-Channel D/A Converter)

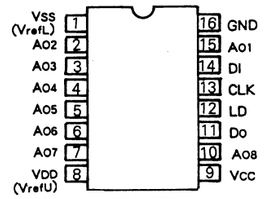

(TOP VIEW)

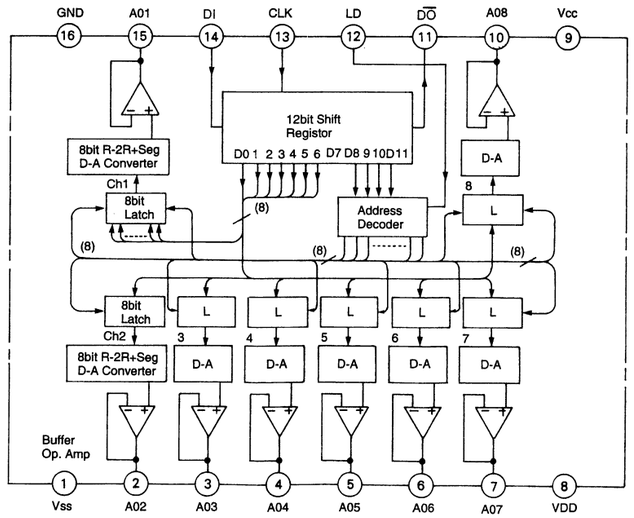

4-61

■ M31020MA-166VP [MITSUBISHI]
(32bit Signal Chip Micro Computer)

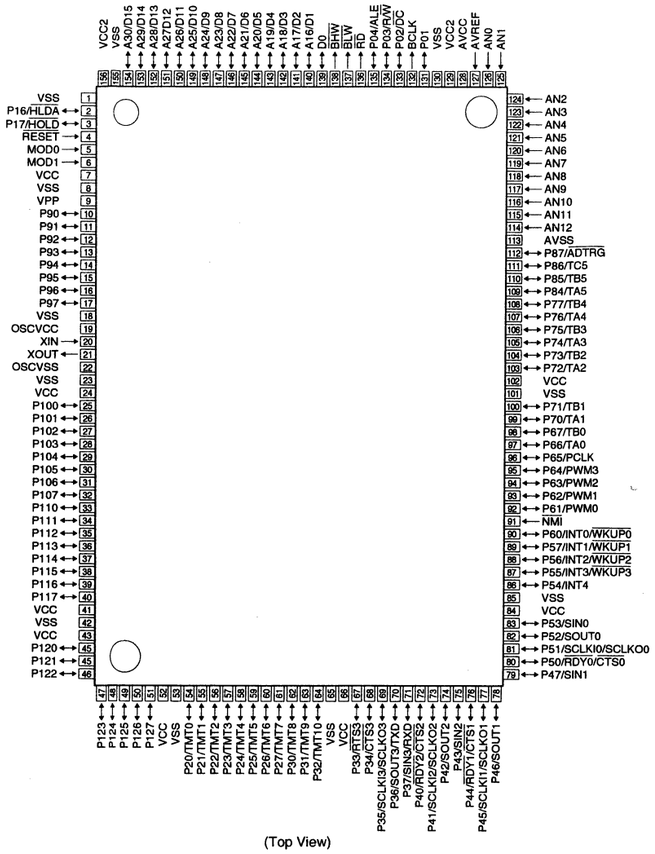

(Top View)

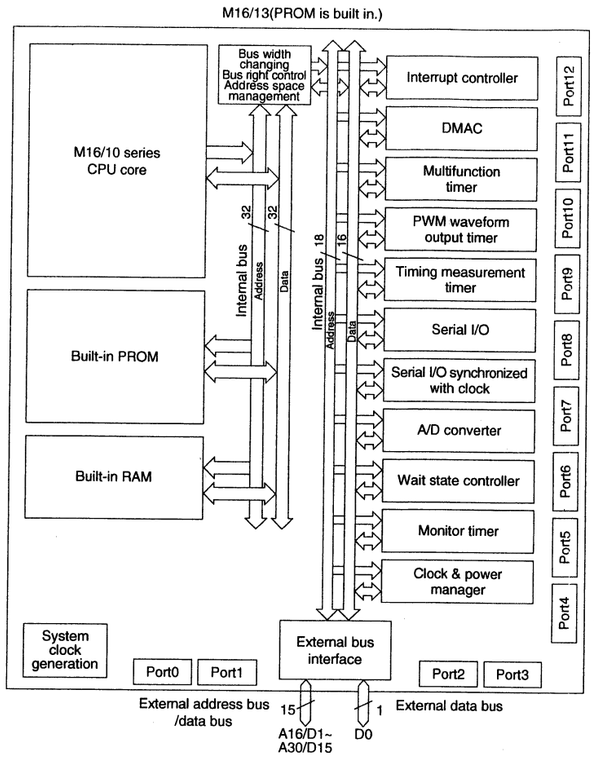

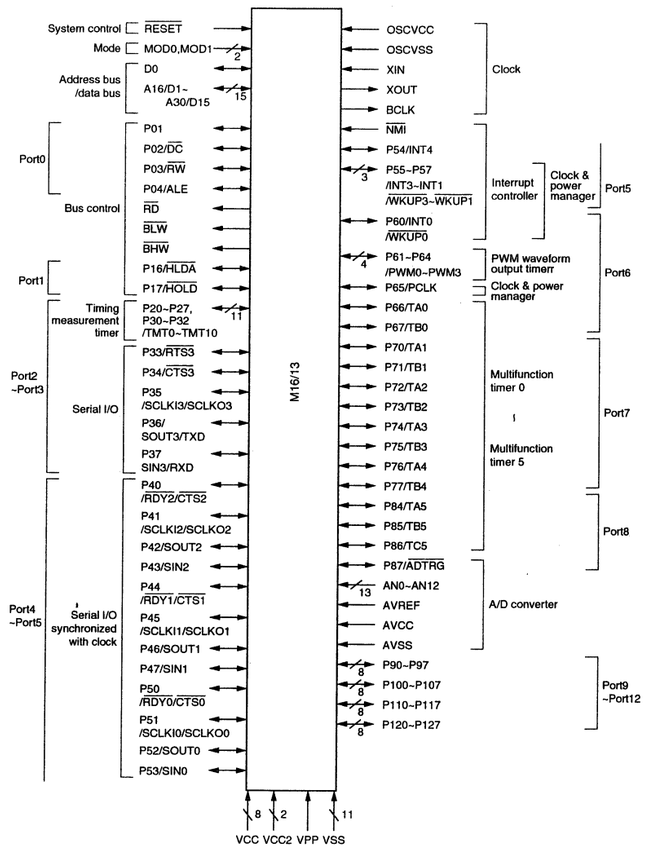

■ M5218AFP-X [MITSUBISHI]
(Dual Op.Amp.)

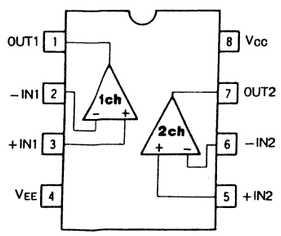

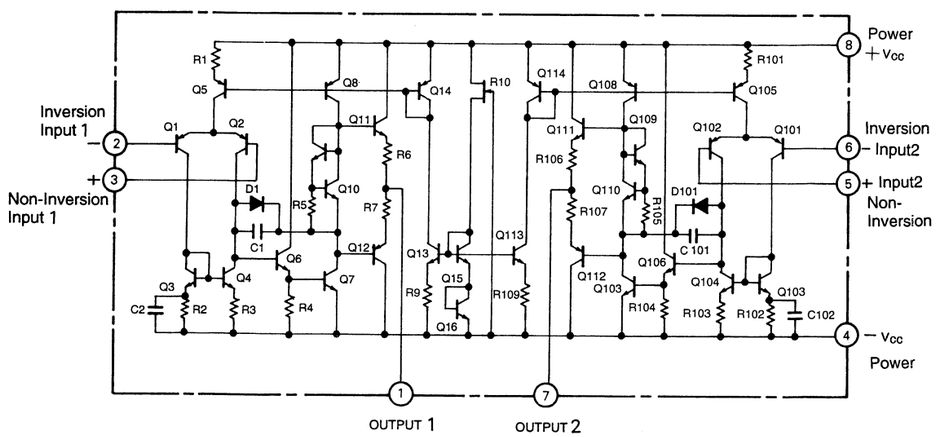

■ M52684AFP-XE [MITSUBISHI]
(SYNC Separator and AFC)

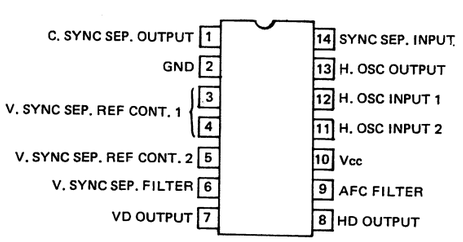

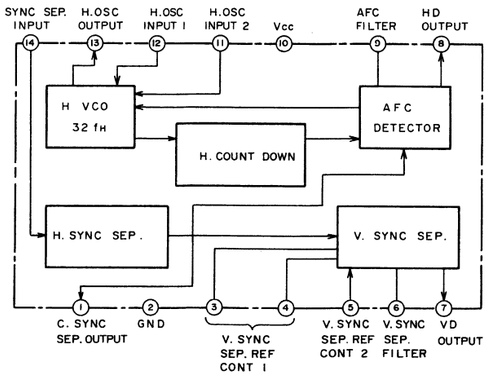

■ M31020MA-167VP [MITSUBISHI]
(Refer to M31020MA-166VP.)

4-62

■ M52387FP [MITSUBISHI]
(Digital Signal Interface)

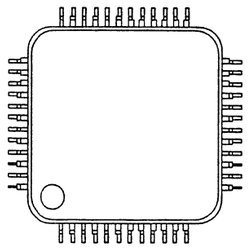

(Top View)

1. WIDE DET OUT1
2. WIDE DET OUT2
3. ACC FIL
4. BPF ADJ
5. NC
6. C-EE OUT
7. VCC2 (3V)
8. C-AD OUT
9. NC
10. EE MUTE
11. NC
12. VREF2
13. IREF FIL
14. VREF FIL
15. IREF
16. GND
17. GND2(C)
18. VREF1
19. GND3(PULSE)
20. CP SYNC OUT
21. NC
22. NC
23. Y-AD OUT
24. PED DC CTL
25. PED CLP FIL
26. Y-EE OUT
27. NC
28. SYNC SEP FIL
29. CLP IN
30. AGC OUT
31. VCC3(3V)
32. NC
33. AGC CTL
34. PWR OFF
35. Y IN
36. NC
37. AGC FIL
38. LPF MONI
39. VBLK IN
40. GND1(Y)
41. LPF ADJ
42. NC
43. VCC1(4.8V)
44. NC
45. ACC CTL
46. C IN
47. WIDE DET IN
48. NC

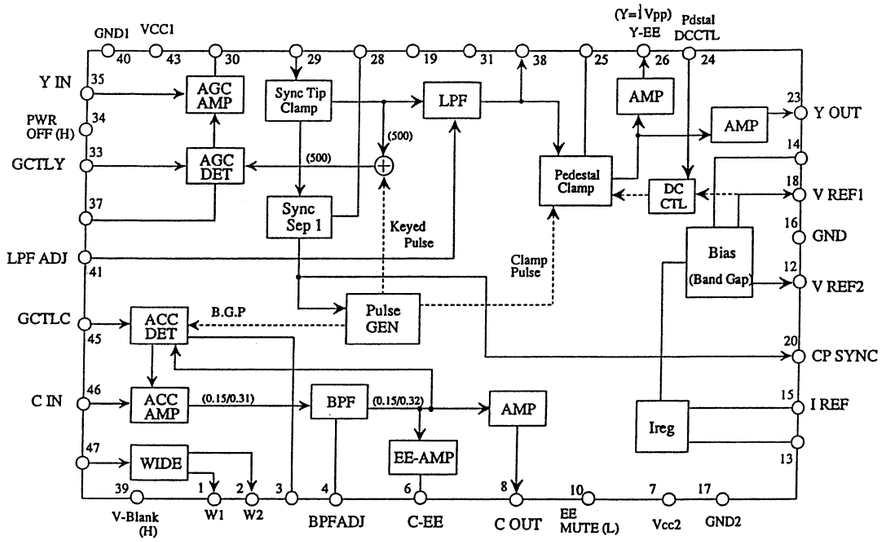

■ MN12821-QR-X [MATSUSHITA]
(Voltage Detecter)

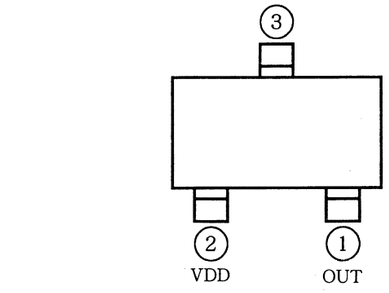

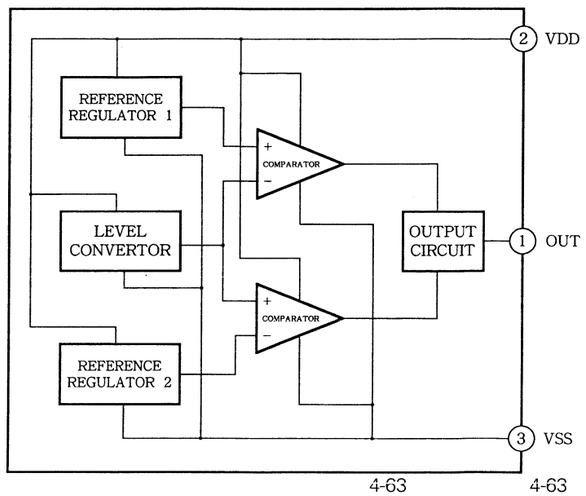

■ M65500FP [MITSUBISHI]
(Error Correcting Codes and Digital Channel Interface)

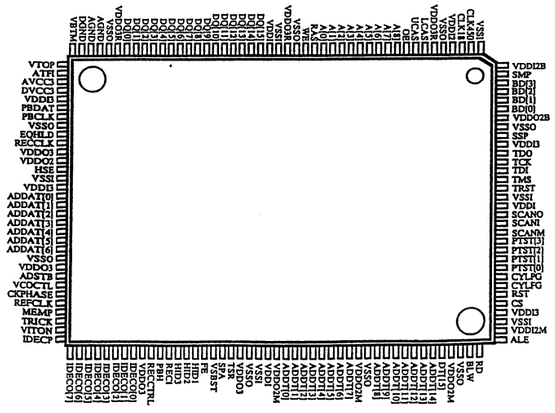

(Top View)

■ M66312FP-W [MITSUBISHI]
(8 Bit LED Driver with Shift Register and Latched 3-State Outputs)

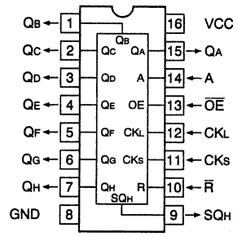

(Top View)

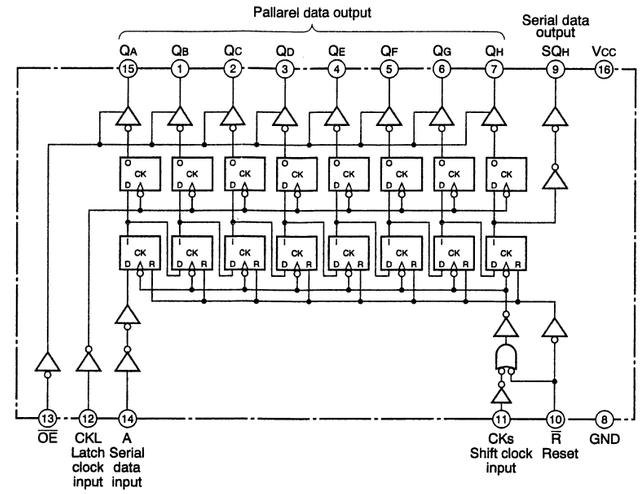

■ MB3782PF-X [FUJITSU]
(Switching Regulator Controller)

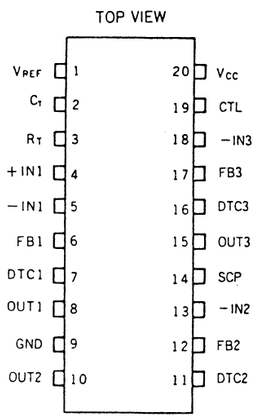

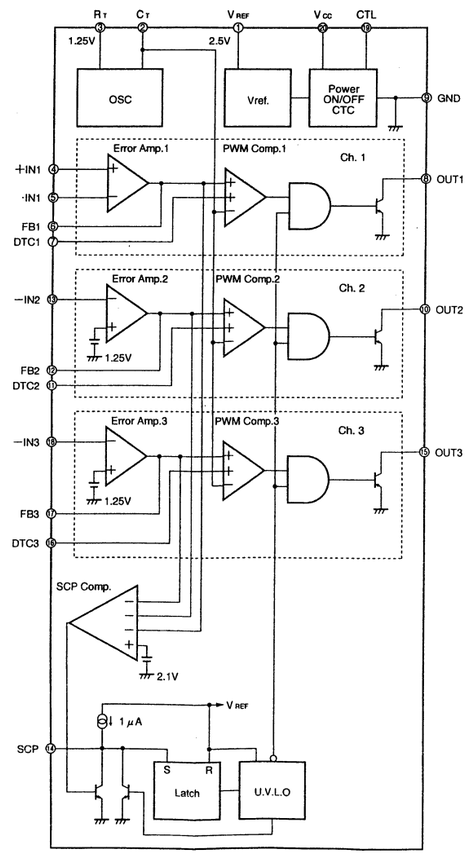

4-63

■ MB88345PF [FUJITSU]
(D/A Converter)

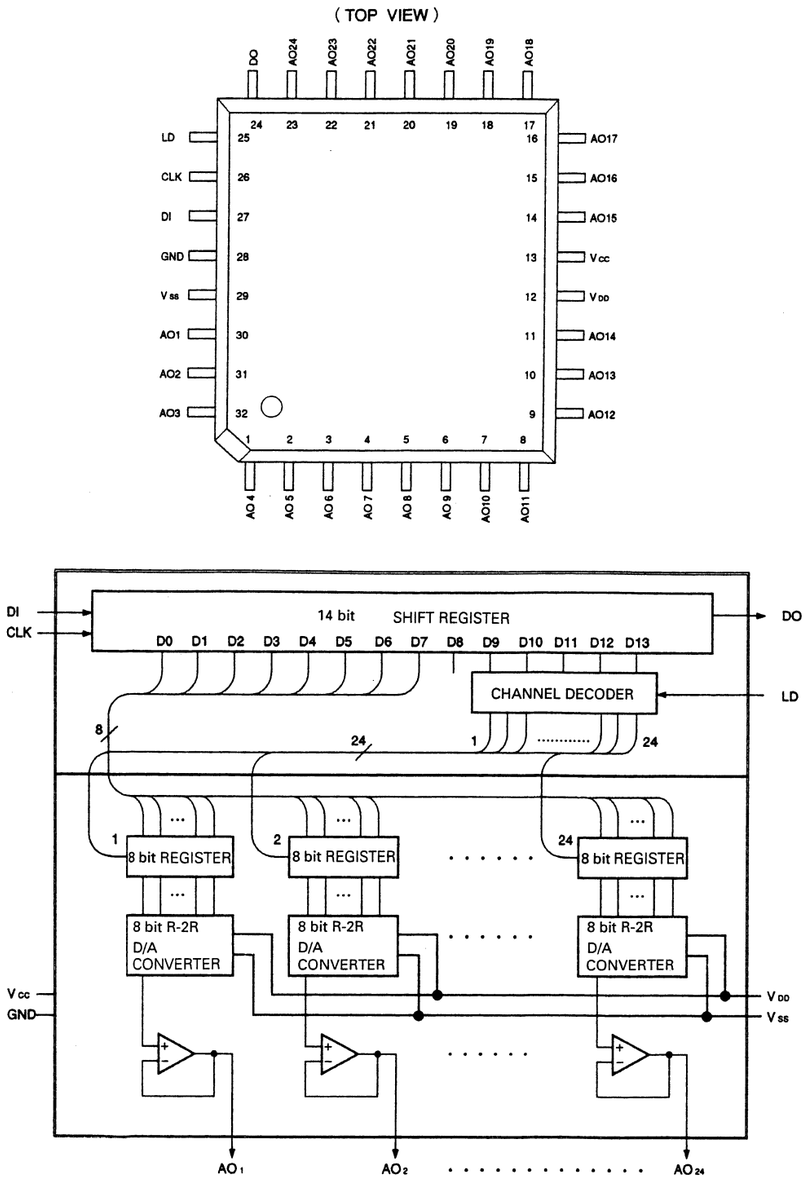

■ MB90T678BPF [MITSUBISHI]
(CPU)

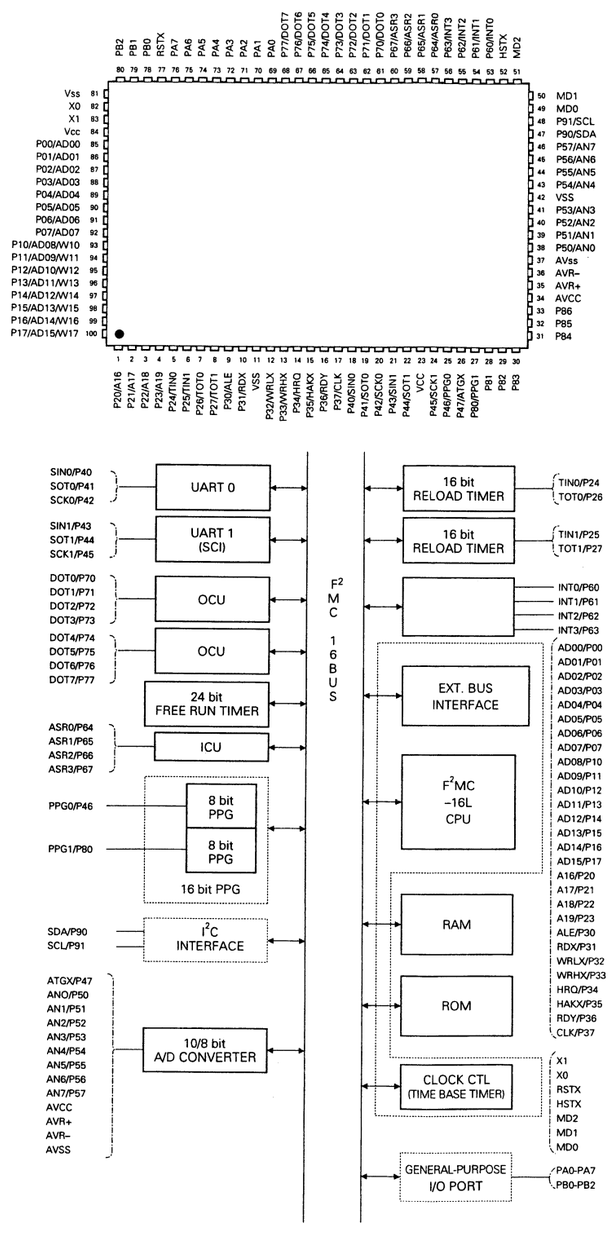

■ MN3112SA-X [MATSUSHITA]
(Vertical Driver)

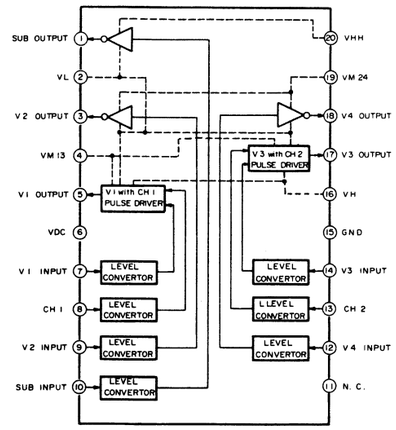

■ MN41V4260TT-A07 [MATSUSHITA]
(4M(256k-word x 16bit)Dynamic RAM)

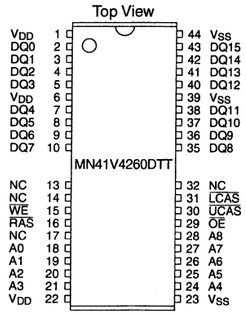

BLOCK DIAGRAM

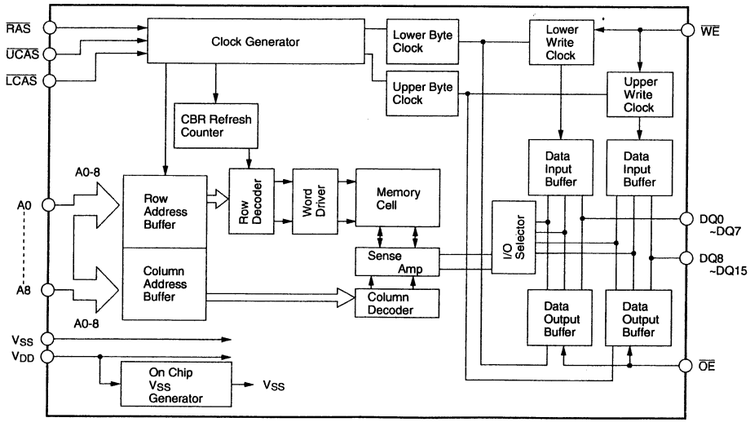

4-64

■ MN1021617HF [MATSUSHITA]
(16bit Micro Controller)

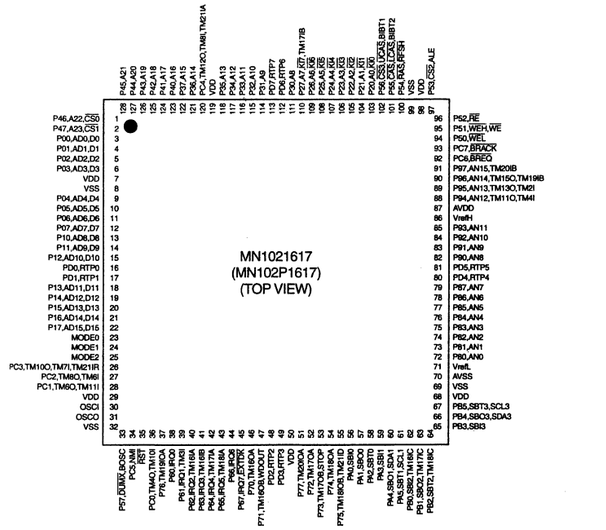

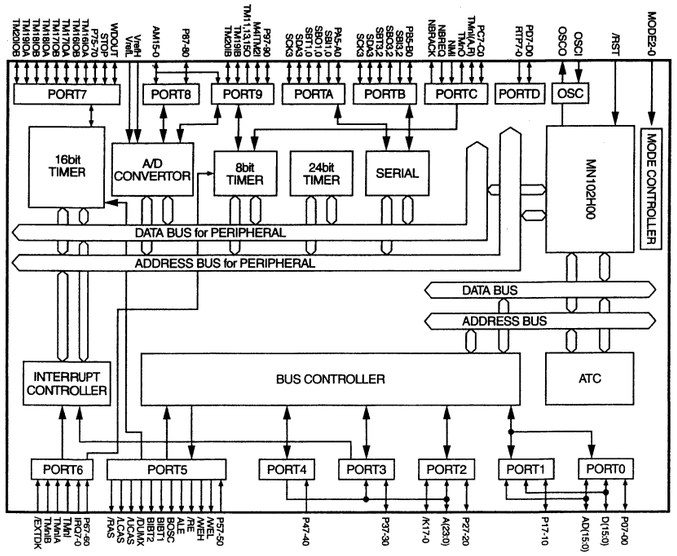

■ MN1021617HF [MATSUSHITA]
(Refer to MN1021617HE.)

■ MN47V07AF [MATSUSHITA]
(Refer to MN47V06AF.)

■ MN47V06AF [MATSUSHITA]
(4.75Mbit (622080 word x 8bit) CMOS DRAM)

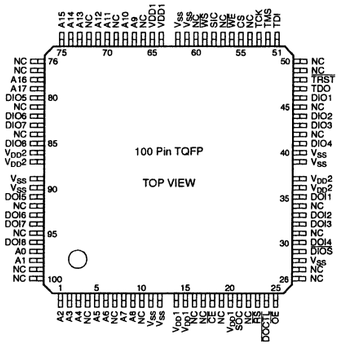

■ Pin Names

Symbol	Pin names	Symbol	Pin names
A0~A17	Address Inputs	$\overline{DIOS}$	Data Input/Output Select
$\overline{CE}$	Chip Enable	$\overline{DOCTL}$	Data Output Control
$\overline{OE}$	Output Enable	TCK	Boundary Scan Test Clock
$\overline{WE}$	Write Enable	TMS	Boundary Scan Test Mode Select
$\overline{WS}$	Write Strobe	$\overline{TRST}$	Boundary Scan Test Reset
$\overline{RS}$	Read Strobe	TDI	Boundary Scan Test Data Input
CS	Chip Select	TDO	Boundary Scan Test Data Output
SIC	Shift-in Clock	$V_{DD}1$	Internal Power Supply (2.7V~3.3V)
SOC	Shift-out Clock	$V_{DD}2$	I/F Power Supply (2.0V~$V_{DD}1$V)
DIO1~8	Data Input/Output	V_{SS}	Power Supply (GND)
DOI1~8	Data Input/Output	NC	No Connection

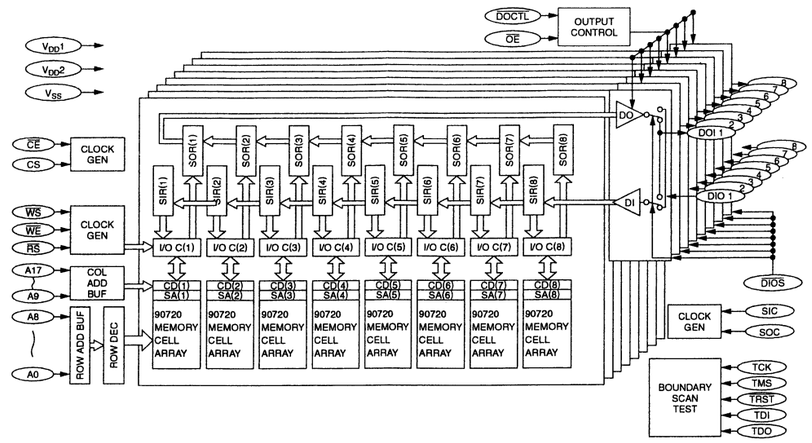

SIR : SHIFT IN REGISTER　　SOR : SHIFT OUT REGISTER　　I/O C : I/O CONTROLLER
CD : COLUMN DECODER　　SA : SENSE AMPLIFIER　　DI : DATA IN BUFFER
DO : DATA OUT BUFFER
CLOCK GEN : CLOCK GENERATOR　　COL ADD BUF : COLUMN ADDRESS BUFFER
ROW ADD BUF : ROW ADDRESS BUFFER　　ROW DEC : ROW DECODER

■ MN67373 [MATSUSHITA]
(Video Compress and Audio DSP at DV Format)

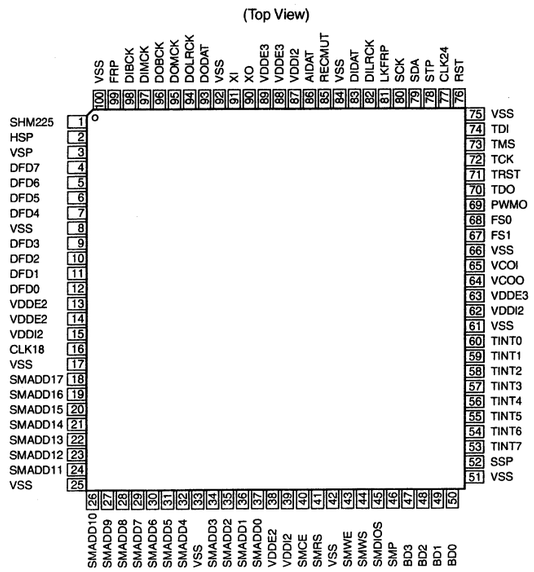

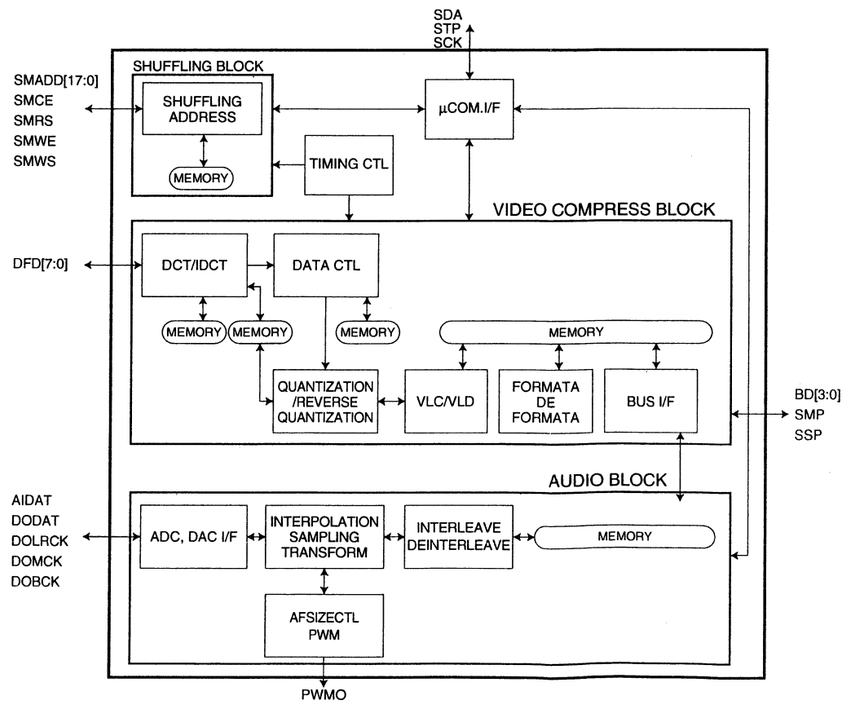

4-65

■ NJM319M-X [JRC]
(Voltage Comparator)

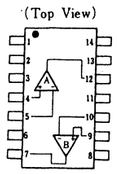

1. NC
2. NC
3. A GND
4. A+INPUT
5. A−INPUT
6. V⁻
7. B OUTPUT
8. B GND
9. B+INPUT
10. B−INPUT
11. V⁺
12. A OUTPUT
13. NC
14. NC

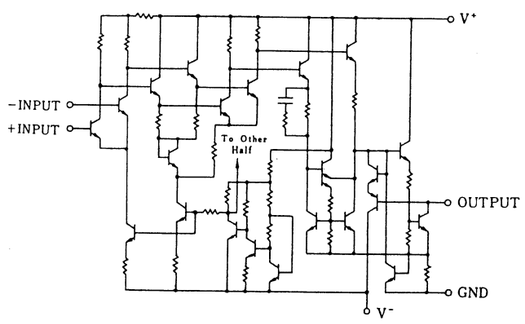

■ NJM4560M-X [JRC]
(Dual Op.Amp)

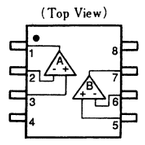

1. A OUTPUT
2. A−INPUT
3. A+INPUT
4. V⁻
5. B+INPUT
6. B−INPUT
7. B OUTPUT
8. V⁺

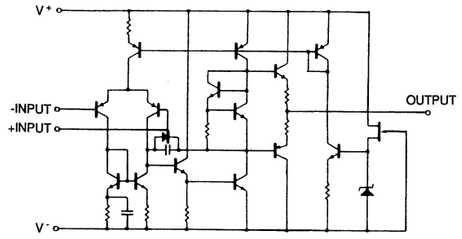

■ NJM4556AM-X [JRC]
(Dual High Current Op.Amp)

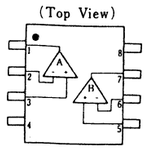

1. A OUTPUT
2. A−INPUT
3. A+INPUT
4. V⁻
5. B+INPUT
6. B−INPUT
7. B OUTPUT
8. V⁺

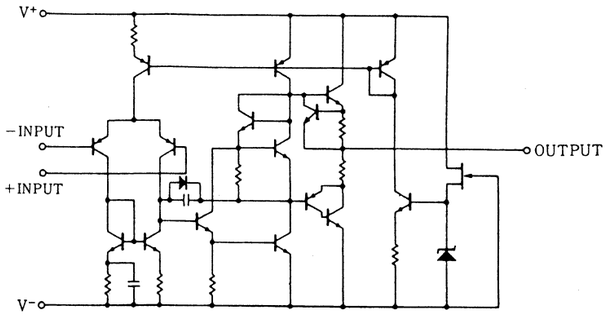

■ NJM78L05UA-X [JRC]
(3-Terminal Positive Voltage Regulator (+5V))

1. OUT
2. GND
3. IN

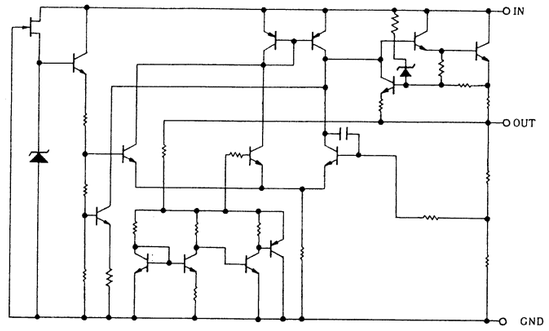

■ NJM78L15UA-X [JRC]
(See NJM78L05UA-X.)

■ NJU6433FB2 [JRC]
(1/4 Duty LCD Driver)

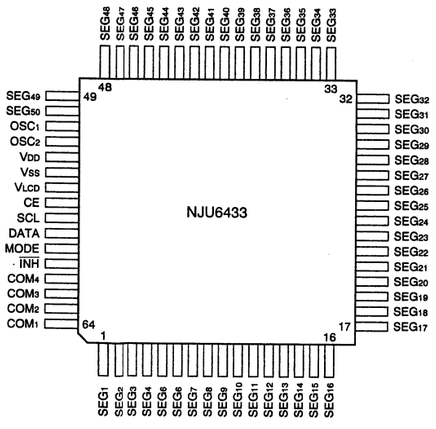

(TOP VIEW)

No.	Symbol	Function
1~50	SEG1~SEG50	Segment output for LCD driver
51 52	OSC1 OSC2	OSC terminal
53	VDD	
54	VSS	GND
55	VLCD	Power source for LCD drive
56	CE	H level : Data input Drop-down edge : Data latch L level : Disable
57	SCL	Clock input for serial data trancefar.
58	DATA	Serial data input.
59	MODE	H level : Mode seting L level : Data input for LCD display
60	$\overline{INH}$	L level : LCD is not display H level : LCD is display
61~64	COM4~COM1	Common output for LCD drive.

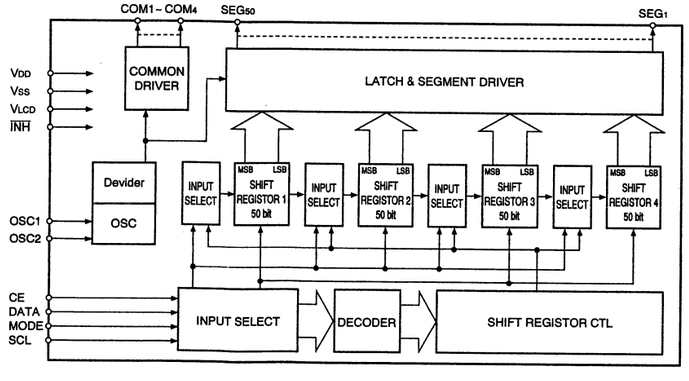

■ NJU7231U33-X [JRC]
(3 Terminal Positive Voltage Regulator(+3.3V))

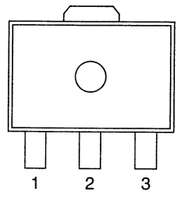

1. GND
2. V_{IN}
3. V_{OUT}

(Top View)

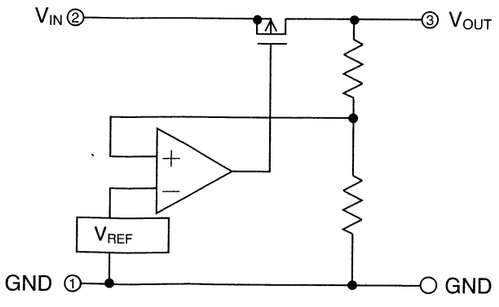

■ PLL1700E-X [BURR-BROWN]
(Programmable Dual PLL Clock Generator)

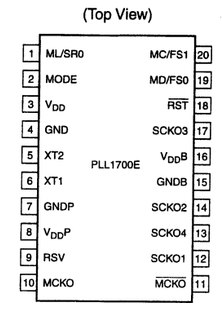

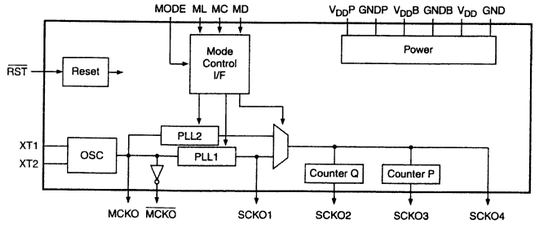

4-66

■ NM24C16LEM8-X [FAIRCHILD]
(16,384bit Standard 2-Wire Bus Interface Serial EEPROM)

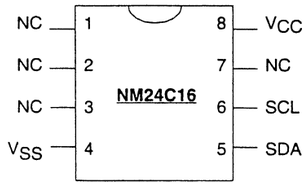

Top View

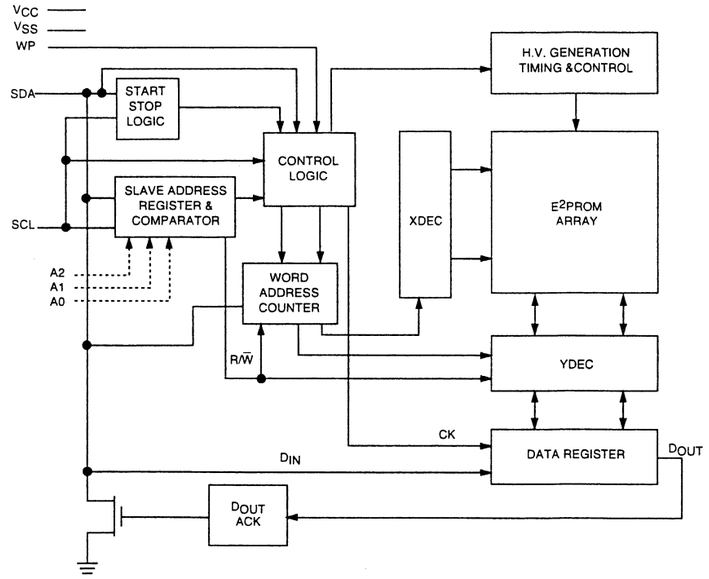

■ S-80823ANNP-W [SEIKO]
(Pricision Voltage Detector)

(Top View)

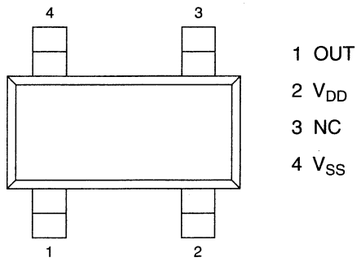

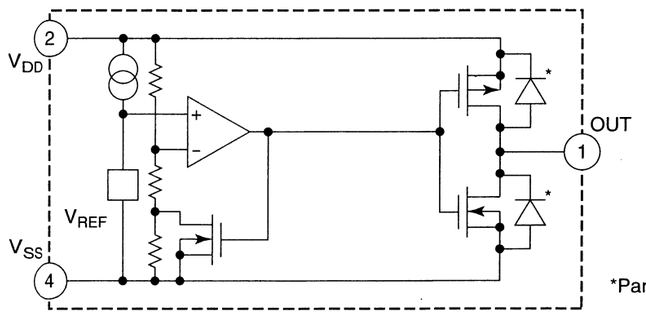

*Parasitic diode

■ NM93C86AEM8-X [NATIONAL SEMICONDUCTOR]
(16,384-Bit Serial Interface, Standard Voltage CMOS EEPROM)

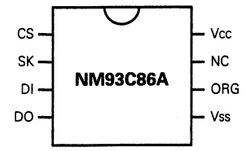

Top View

Pin Nane

Pin	Description
CS	Chip Select
SK	Serial Data Clock
DI	Serial Data Input
DO	Serial Data Output
VSS	Ground
ORG	Memory Organization Select (On the NM93C86A)
NC	No Connect
VCC	Positive Power Supply

Block Diagram

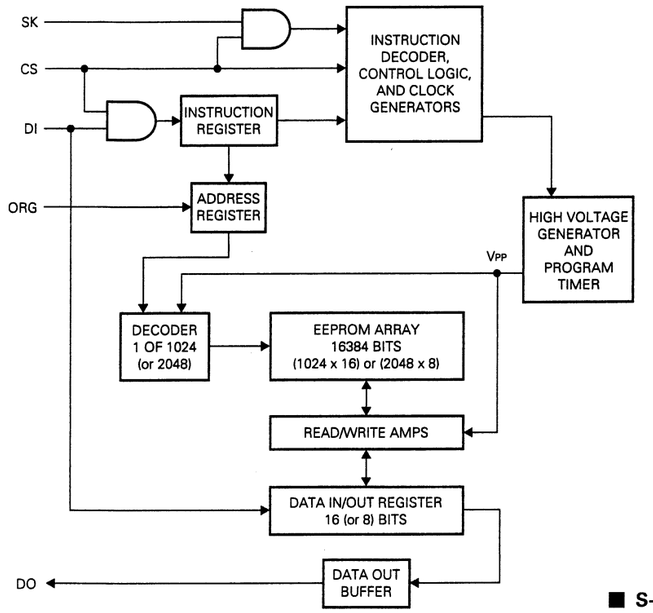

■ PLSC1360 [SST27SF020-70NH/Silicon Strage Technology]
(2M Bit Flash Memoly)

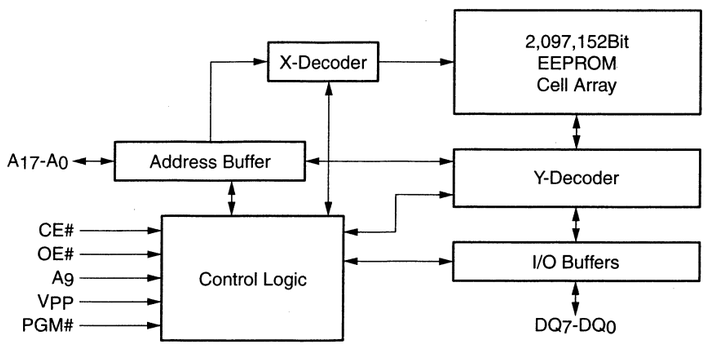

■ PLSL1104 [SST27SF020-70NH/Silicon Strage Technology]
(See PLSC1360.)

■ S-81233SGUP-X [SEIKO]
(Voltage Regulator(3.3V))

Top view

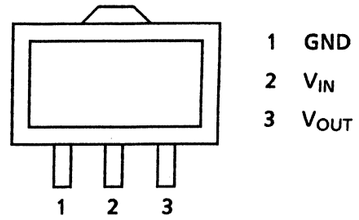

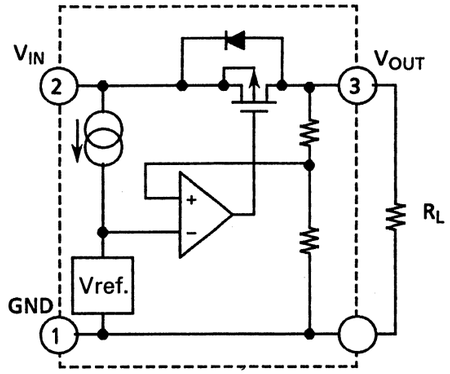

■ S-81240PG-PJ-X [SEIKO]
(See S-81233SGUP-X.)

■ S-80840ANNP-W [SEIKO]
(Precision Voltage Detector)

Top view

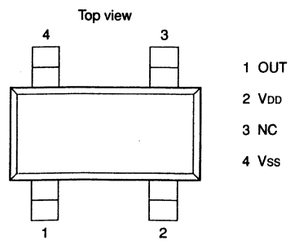

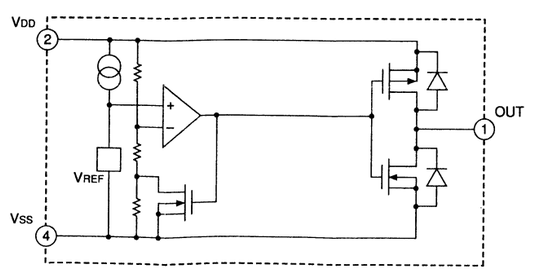

4-67

■ S-8423LFS-X [SEIKO]
(Battery Back-up Selector)

8 pin SSOP
Top view

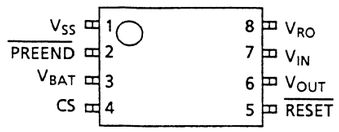

Pin name	Description
CS	Output terminal for CS voltage detector
$\overline{\text{RESET}}$	Output terminal for RESET voltage detector
$\overline{\text{PREEND}}$	Output terminal for PREEND voltage detector
VIN*	Input terminal for main power supply
VBAT*	Power input terminal for backup
VOUT*	Output terminal for voltage regulator 2
VRO*	Output terminal for voltage regulator 1
VSS	GND

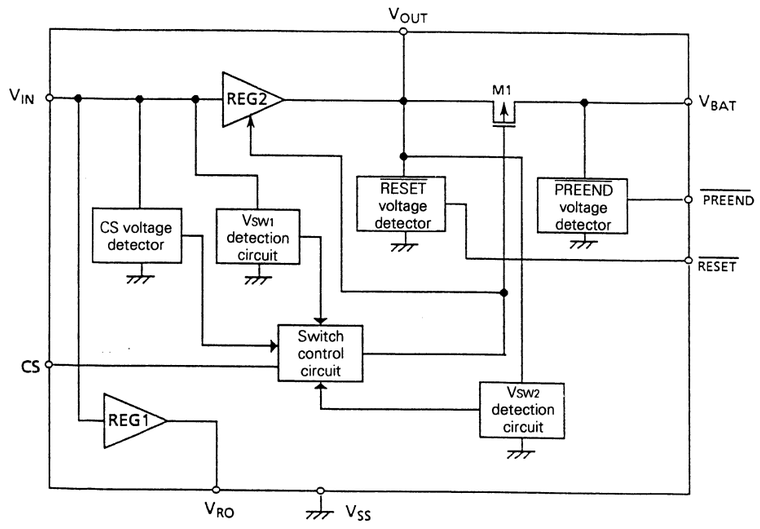

■ SN74CBT3384APWX [TEXAS]
(10 Bit Cross Bar Switch)

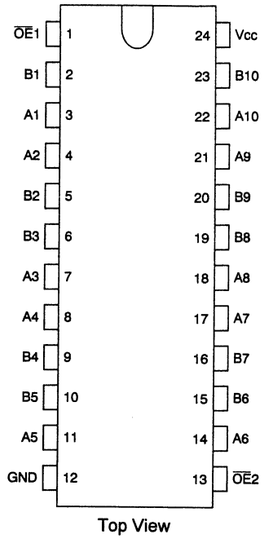

Top View

$\overline{OE}1$	$\overline{OE}2$	B1 – B5	B6 – B10
L	L	A1 – A5	A6 – A10
L	H	A1 – A5	Z
H	L	Z	A6 – A10
H	H	Z	Z

H : High Level
L : Low Level
X : Don't Care
Z : High Impedance

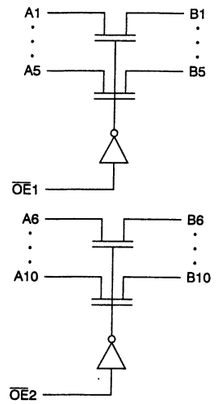

■ SN74LV574APW-X [TEXAS INSTRUMENTS]
(Octal D-Type EDGE-Trigger Flip-Flop With NON Inverted 3-State Outputs)

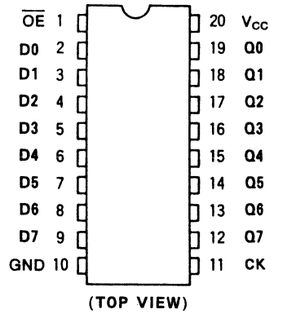

(TOP VIEW)

Logic

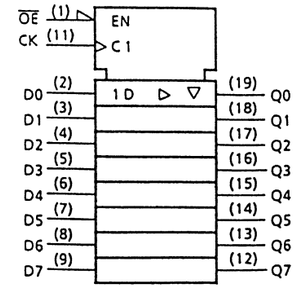

INPUTS			OUTPUT
$\overline{OE}$	CK	D	
H	X	X	Z
L	↑	X	Qn
L	↓	L	L
L	↓	H	H

X : Don't Care
Z : High Impedance
Qn : No Change

■ SN74LV08APW-X [TEXAS]
(Quad 2-Input AND Gates)

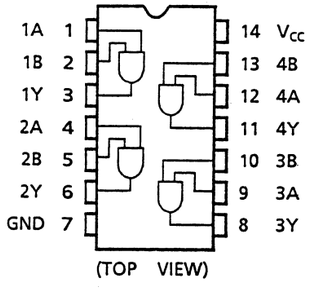

(TOP VIEW)

TRUE Table

A	B	Y
L	L	L
L	H	L
H	L	L
H	H	H

■ TA75S01F-X [TOSHIBA]
(Single Op.Amp.)

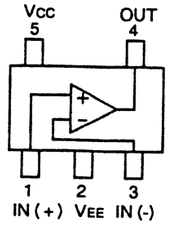

■ TC4051BF-X [TOSHIBA]
(Single 8 Channel Analog Multiplexers/Demultiplexers)

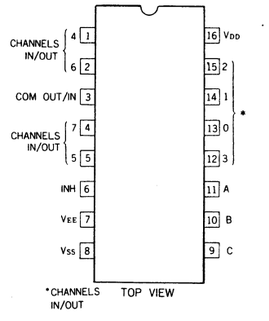

*CHANNELS IN/OUT TOP VIEW

TRUTH TABLE

CONTROL INPUTS				"ON" CHANNEL
INHIBIT	C	B	A	4051
L	L	L	L	0
L	L	L	H	1
L	L	H	L	2
L	L	H	H	3
L	H	L	L	4
L	H	L	H	5
L	H	H	L	6
L	H	H	H	7
H	※	※	※	NONE

※ Don't Care.

LOGIC DIAGRAM

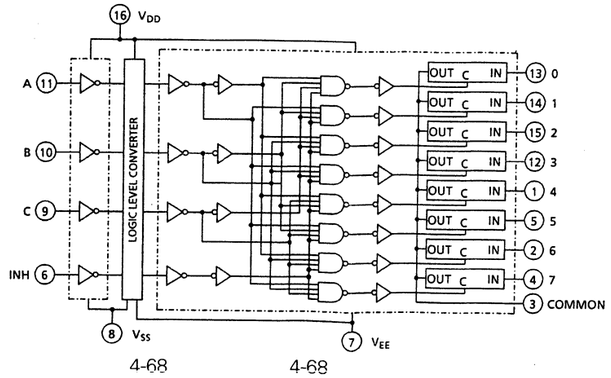

■ TC4053BFT-X [TOSHIBA]
(Triple 2 Channel Analog Multiplexers/Demultiplexers)

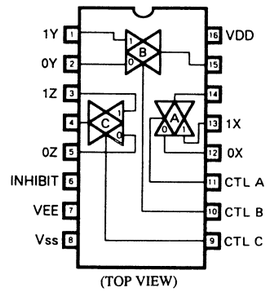

(TOP VIEW)

TRUTH TABLE

CONTROL INPUTS				"ON" CHANNEL
INHIBIT	C	B	A	4053BP 4053BF
L	L	L	L	0X, 0Y, 0Z
L	L	L	H	1X, 0Y, 0Z
L	L	H	L	0X, 1Y, 0Z
L	L	H	H	1X, 1Y, 0Z
L	H	L	L	0X, 0Y, 1Z
L	H	L	H	1X, 0Y, 1Z
L	H	H	L	0X, 1Y, 1Z
L	H	H	H	1X, 1Y, 1Z
H	*	*	*	NOTE

* Don't Care.

4-68

■ ST16C2550CQ48 [EXAR]
(Dual UART with 16-Byte of Transmit and Receive FIFO'S)

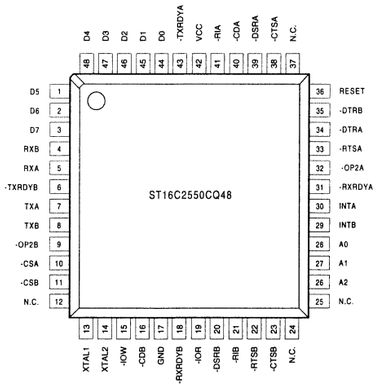

(Top View)

Block Diagram

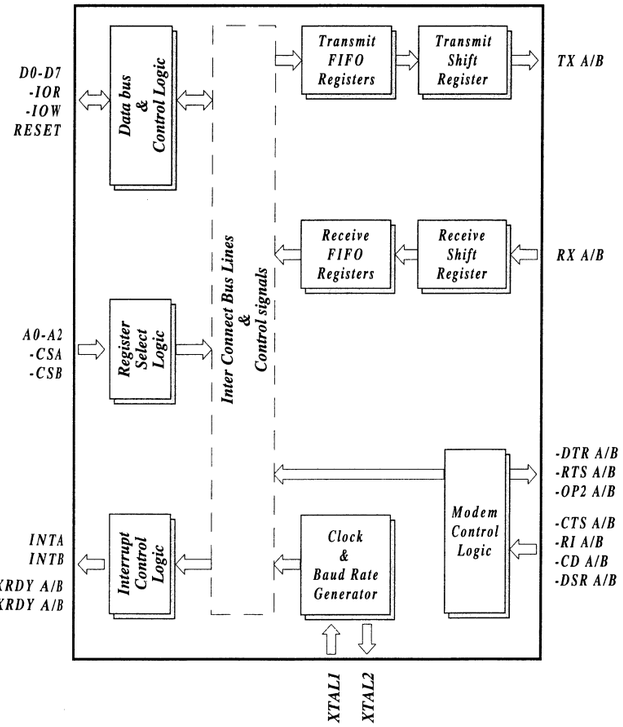

■ T9P90EF [TOSHIBA]
(A/D and D/A Converter for Video Signal)

(Top View)

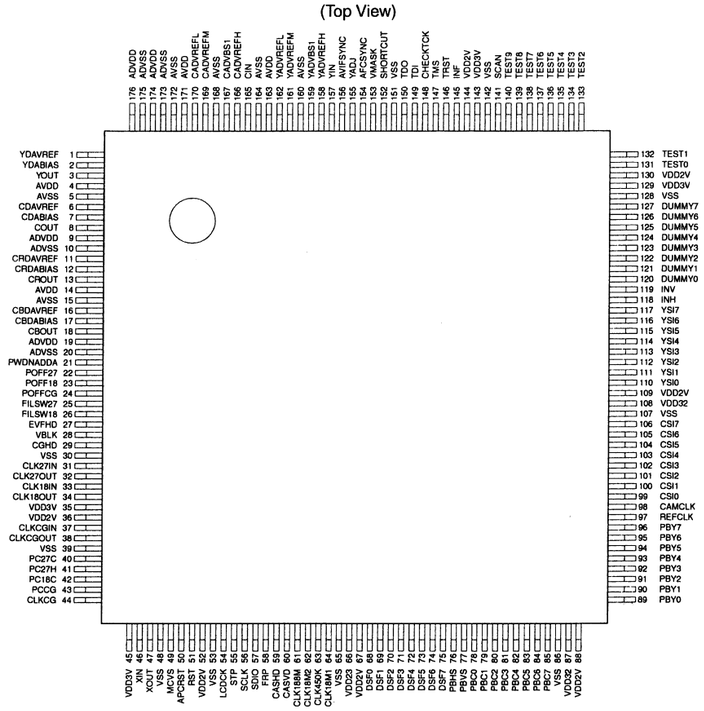

BLOCK DIAGRAM

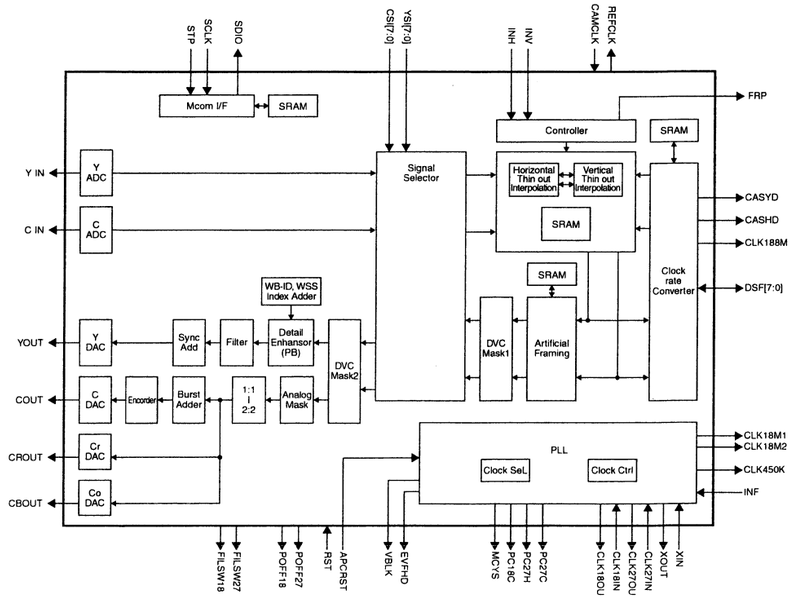

■ TC4S11F-X [TOSHIBA]
(2 Input Single NAND Gate)

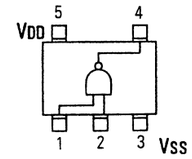

■ TC4S66F-X [TOSHIBA]
(Bilateral Switch)

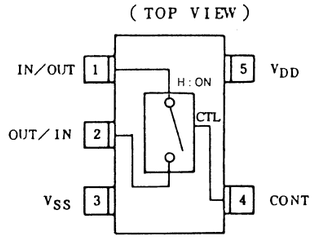

CONTROL	IMPEDANCE BETWEEN IN/OUT - OUT/IN ※
H	$0.5 \sim 5 \times 10^2\ \Omega$
L	$> 10^9\ \Omega$

※ See Electrical Characteristics

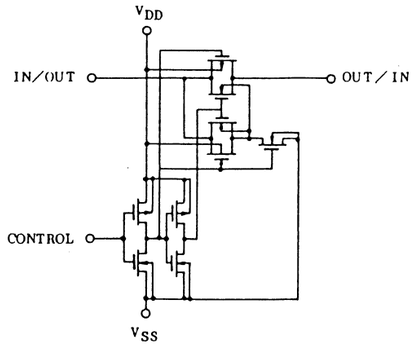

■ TC4S81F-X [TOSHIBA]
(2-Input AND Gate)

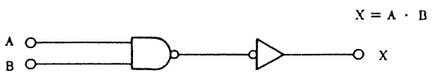

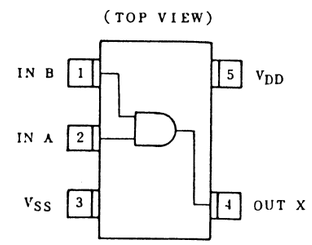

4-69

■ TC4W53F-X [TOSHIBA]
(2-Channel Multiplexer)

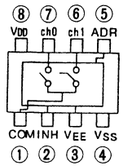

TRUE TABLE

CONTROL INPUT		ON CHANNEL
INH	ADR	
L	L	ch0
L	H	ch1
H	*	NONE

*Don't care

■ TC4W53FU-X [TOSHIBA]
(2-Channel Multiplexer)

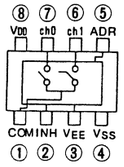

TRUE TABLE

CONTROL INPUT		ON CHANNEL
INH	ADR	
L	L	ch0
L	H	ch1
H	*	NONE

*Don't care

■ TC4W66FU-X [TOSHIBA]
(Analog Switch)

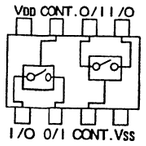

■ TC74VHC04FT-X [TOSHIBA]
(Hex Inverters)

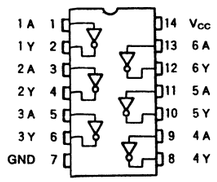

(TOP VIEW)

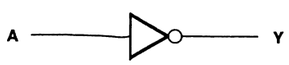

■ TC74HC165AF-X [TOSHIBA]
(8-Bit Serial or Parallel-In/Serial Out Shift Registers With Complementary Out)

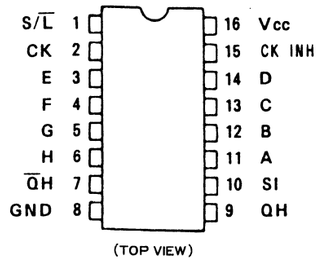

(TOP VIEW)

Timing chart

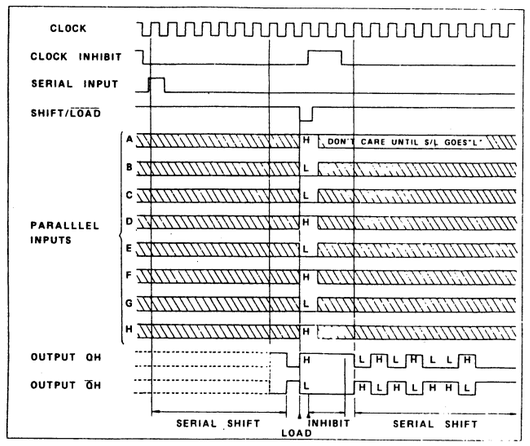

■ TC74HC4053AFT-X [TOSHIBA]
(Triple 2-Channel Analog Multiplexer/Demultiplexer)

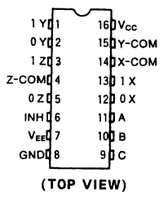

(TOP VIEW)

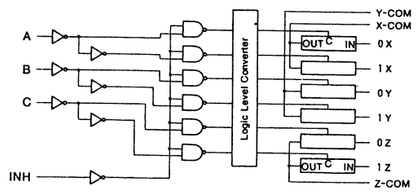

TRUE Table

CONTROL INPUTS				"ON" CHANNEL
INHIBIT	C*	B	A	HC4053A
L	L	L	L	0X, 0Y, 0Z
L	L	L	H	1X, 0Y, 0Z
L	L	H	L	0X, 1Y, 0Z
L	L	H	H	1X, 1Y, 0Z
L	H	L	L	0X, 0Y, 1Z
L	H	L	H	1X, 0Y, 1Z
L	H	H	L	0X, 1Y, 1Z
L	H	H	H	1X, 1Y, 1Z
H	X	X	X	NONE

X : DON'T CARE

■ TC74HC4052AFT-X [TOSHIBA]
(Dual 4-Channel Analog Multiplexer)

TC74HC4052A

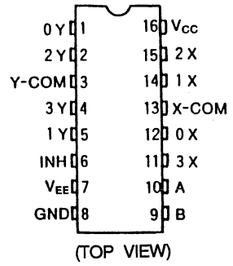

(TOP VIEW)

TRUE Table

CONTROL INPUTS			"ON" CHANNEL
INHIBIT	B	A	HC4052A
L	L	L	0X, 0Y
L	L	H	1X, 1Y
L	H	L	2X, 2Y
L	H	H	3X, 3Y
H	X	X	NONE

X : DON'T CARE

TC74HC4052A

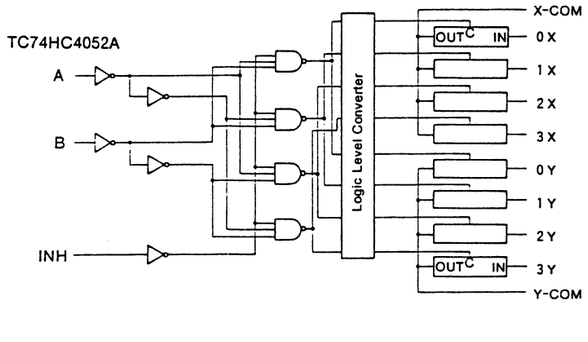

■ TC74VHC08FT-X [TOSHIBA]
(See SN74LV08APW-X.)

■ TC74VHC10FT-X [TOSHIBA]
(Triple 3-Input NAND Gates)

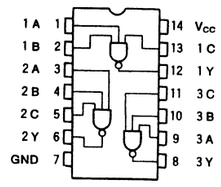

(TOP VIEW)

TRUE Table

A	B	C	Y
L	X	X	H
X	L	X	H
X	X	L	H
H	H	H	L

X : Don't Care

■ TC74HC4538AF-X [TOSHIBA]
(Dual Retriggerable Monostable Multivibrator)

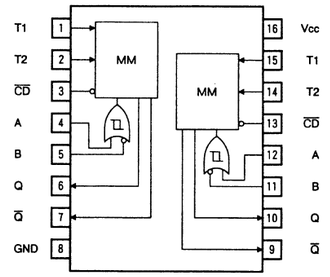

TOP VIEW

TRUE Table

INPUT			OUTPUT		NOTE
A	B	CD	Q	Q	
↑	H	H	⎍	⎍	OUTPUT ENABLE
X	L	H	L	H	INHIBIT
H	X	H	L	H	INHIBIT
L	↓	H	⎍	⎍	OUTPUT ENABLE
X	X	L	L	H	INHIBIT

X:Don't Care

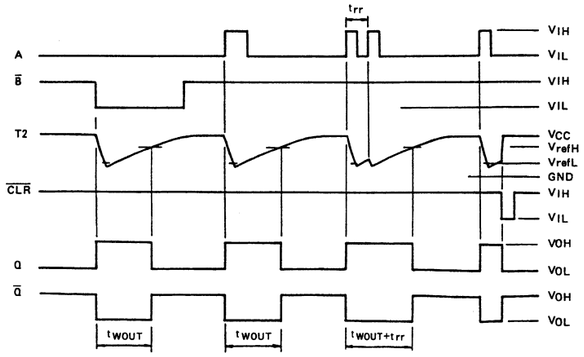

■ TC74VHC123AFT-X [TOSHIBA]
(Dual Retriggerable Monostable Multivibrators)

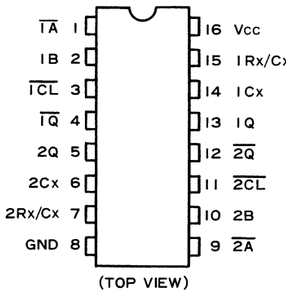

(TOP VIEW)

TRUE Table

INPUTS			OUTPUTS		NOTE
A	B	OL	Q	Q	
↓	H	H	⎍	⎍	OUTPUT ENABLE
X	L	H	L	H	INHIBIT
H	X	H	L	H	INHIBIT
L	↑	H	⎍	⎍	OUTPUT ENABLE
L	H	↑	⎍	⎍	OUTPUT ENABLE
X	X	L	L	H	INHIBIT

X:DON'T CARE

■ TC74VHC125FT-X [TOSHIBA]
(Quad Bus Buffer Gates With 3-State Outputs)

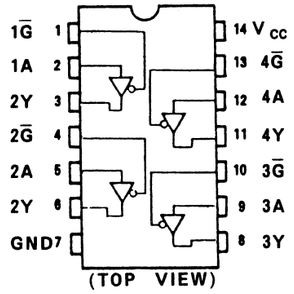

(TOP VIEW)

TC74HC125A TRUE Table

INPUTS		OUTPUTS
G	A	Y
H	X	Z
L	L	L
L	H	H

X : Don't Care
Z : High Impedance

■ TC74VHC165FT-X [TOSHIBA]
(See TC74HC165AF-X.)

■ TC74VHC541FT-X [TOSHIBA]
(Octal Bus Buffer With Inverted 3-State Outputs)

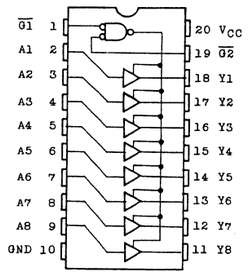

(TOP VIEW)

TRUE Table

INPUT			OUTPUT
G1̅	G2̅	A	Y
L	L	H	H
L	L	L	L
H	X	X	Z
X	H	X	Z

■ TC74VHCT541AFTX [TOSHIBA]
(See TC74VHC541FT-X.)

■ TC74VHC139FT-X [TOSHIBA]
(Dual 2-Line to 4-Lile Decoders/Demultiplexers)

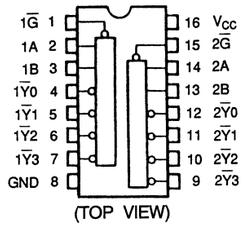

(TOP VIEW)

TRUE Table

INPUTS			OUTPUTS				SELECTED OUTPUT
ENABLE	SELECT						
G̅	B	A	Y0̅	Y1̅	Y2̅	Y3̅	
H	X	X	H	H	H	H	NONE
L	L	L	L	H	H	H	Y0̅
L	L	H	H	L	H	H	Y1̅
L	H	L	H	H	L	H	Y2̅
L	H	H	H	H	H	L	Y3̅

X : Don't care

■ TC74VHC244FT-X [TOSHIBA]
(Octal Buffers AND Line Drivers With NON-Inverted 3-State Outputs)

TC74HC244A

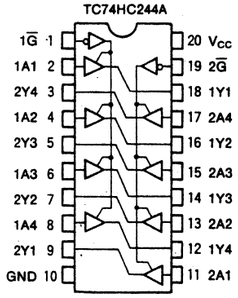

(TOP VIEW)

TRUE Table

INPUTS		OUTPUTS
G̅	An	Y̅n
L	L	L
L	H	H
H	X	Z

X : Don't Care
Z : High Impedance

■ TC74VHC373FT-X [TOSHIBA]
(Octal D-Type Latch With NON-Inverted 3-State Output)

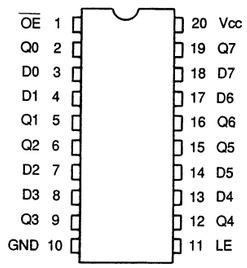

(Top View)

TRUE Table

INPUTS			OUTPUTS
OE̅	LE	D	
H	X	X	Z
L	L	X	Qn
L	H	L	L
L	H	H	H

X : Don't Care
Z : Hi impedance
Qn : Q output level before the LE become "L".

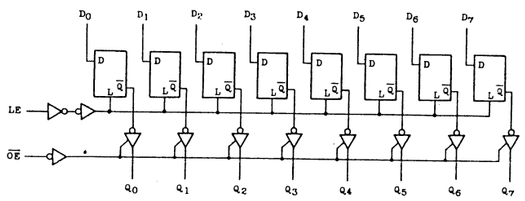

■ TC74VHC157FT-X [TOSHIBA]
(Quad 2-Line to 1-Line Data Selectors/Multiplexers,NON-Inverted Data Outputs)

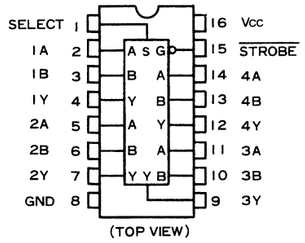

(TOP VIEW)

TRUE Table

INPUTS				OUTPUT
STROBE	SELECT	A	B	Y
H	X	X	X	L
L	L	L	X	L
L	L	H	X	H
L	H	X	L	L
L	H	X	H	H

X:DON'T CARE

■ TC74VHC74FT-X [TOSHIBA]
(Dual D-Type Positive-EDGE-Triggered Flip-Flops With Preset AND Clear)

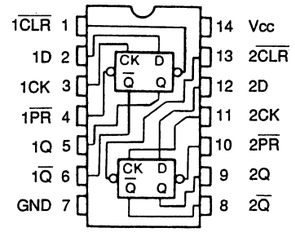

(Top View)

TRUE Table

INPUTS				OUTPUTS		FUNCTION
CLR	PR	D	CK	Q	Q	
L	H	X	X	L	H	CLEAR
H	L	X	X	H	L	PRESET
L	L	X	X	H	H	—
H	H	L	↑	L	H	—
H	H	H	↑	H	L	—
H	H	X	↓	Qn	Qn	NO CHANGE

X : Don't care

■ TC7S02FU-X [TOSHIBA]
(2 Input Single NOR Gate)

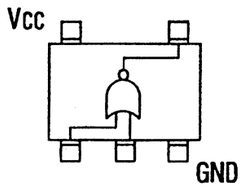

■ TC7S08FU-X [TOSHIBA]
(2 Input Single AND Gate)

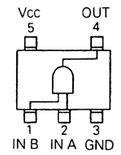

TRUE Table

A	B	X
L	L	L
L	H	L
H	L	L
H	H	H

■ TC7S14FU-X [TOSHIBA]
(Schmitt trigger)

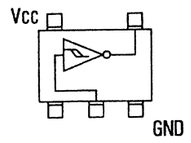

■ TC7S66FU-X [TOSHIBA]
(Analog SW)

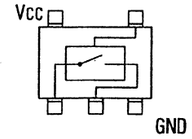

■ TC7SET04FU-X [TOSHIBA]
(Single Inverter Gate)

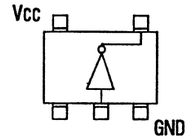

■ TC7SH00F-X [TOSHIBA]
(2 Input NAND Gate)

(Top View)

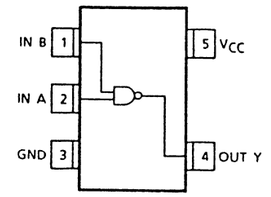

TRUE Table

A	B	Y
L	L	H
L	H	H
H	L	H
H	H	L

4-71

■ TC7SH00FU-X [TOSHIBA]
(2-Input NAND Gate)

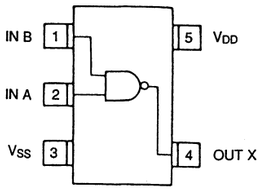

TRUE Table

A	B	X
L	L	H
L	H	H
H	L	H
H	H	L

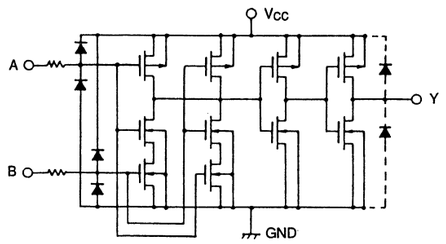

■ TC7SH04FU-X [TOSHIBA]
(Inverter)

Pin arangement

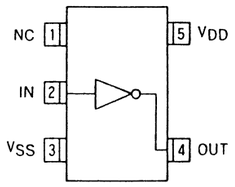

■ TC7SH08F-X [TOSHIBA]
(See TC7S08FU-X.)

■ TC7SH08FU-X [TOSHIBA]
(See TC7S08FU-X.)

■ TC7SHU04FU-X [TOSHIBA]
(See TC7SH04FU-X.)

■ TC7SU04FU-X [TOSHIBA]
(See TC7SH04FU-X.)

■ TC7SH32FU-X [TOSHIBA]
(2 Input Single OR Gate)

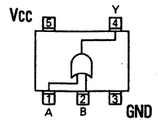

TRUE Table

A	B	Y
H	H	H
L	H	H
H	L	H
L	L	L

■ TC7W00FU-X [TOSHIBA]
(2 Input Dual NAND Gate)

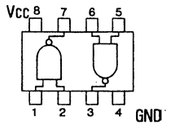

TRUE Table

A	B	X
L	L	H
L	H	H
H	L	H
H	H	L

■ TC7W04FU-X [TOSHIBA]
(Triple Inverter Gate)

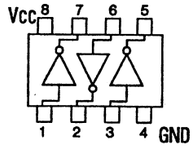

■ TC7W14FU-X [TOSHIBA]
(Schmitt Trigger Triple Inverte Gate)

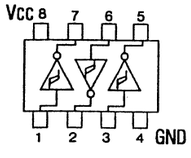

■ TC7W66FU-X [TOSHIBA]
(Dual Birateral Switch)

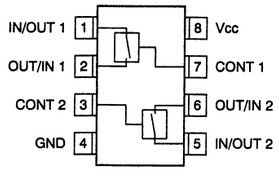

■ TC7W74FU-X [TOSHIBA]
(D-Q Flip-Flop)

(TOP VIEW)

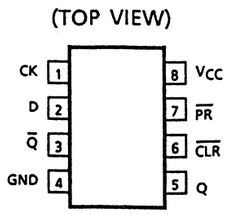

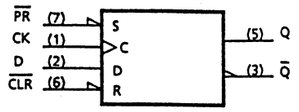

TRUE Table

INPUTS				OUTPUTS		FUNCTION
CLR̄	PR̄	D	CK	Q	Q̄	
L	H	×	×	L	H	CLEAR
H	L	×	×	H	L	PRESET
L	L	×	×	H	H	—
H	H	L	↑	L	H	—
H	H	H	↑	H	L	—
H	H	×	↓	Q_n	$\bar{Q}_n$	NO CHANGE

× : Don't care

■ TC7WH126FU-X [TOSHIBA]
(Dual Bus Buffer)

(TOP VIEW)

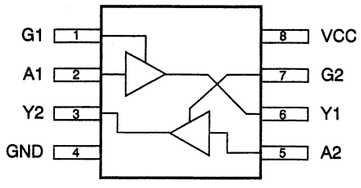

Truth Table

INPUTS		OUTPUTS
G	A	Y
L	X	Z
H	L	L
H	H	H

X : Don't Cate
Z : High Impedance

■ TC7WT125FU-X [TOSHIBA]
(Dual Bus Buffer)

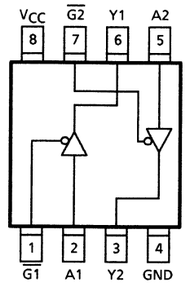

Top View

■ TC7WT241FU-X [TOSHIBA]
(Dual Bus Buffer Non Inverted 3-State Outputs)

(TOP VIEW)

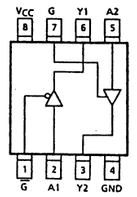

TRUTH TABLE

INPUTS			OUTPUTS
G̅	G	A	Y
L	H	L	L
L	H	H	H
H	L	×	Z

× : Don't Care
Z : High Impedance

■ TLC2932IPW-X [TEXAS]
(PLL)

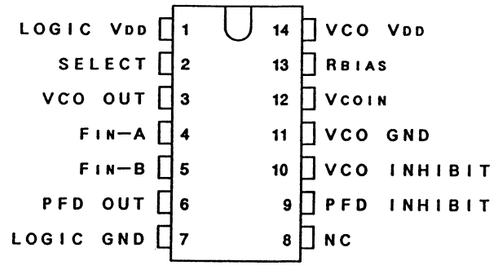

■ TC7WT240FU-X [TOSHIBA]
(Inverted 3-State Output)

(TOP VIEW)

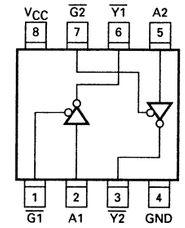

■ UPC812G2-X [NEC]
(Op.Amp.)

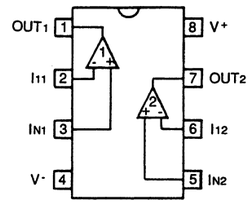

4-72

■ TSB13LV11PBW [TEXAS] (DVC-1394 LINK/PHY)

(TOP VIEW)

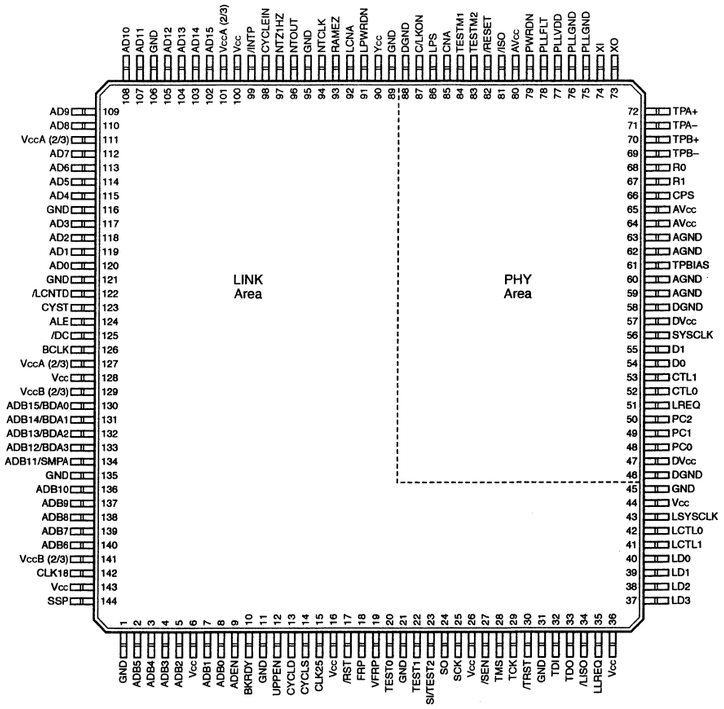

■ UPD6461GS-913 [NEC] (On Screen Charactor Display)

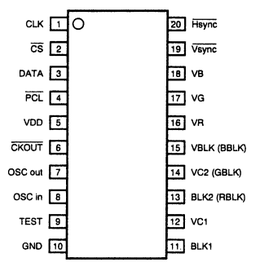

(Top View)

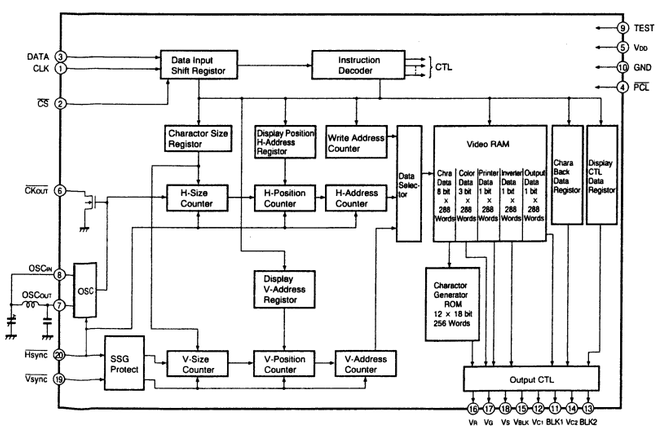

■ UPC2384GA [NEC] (Digital VTR PLL)

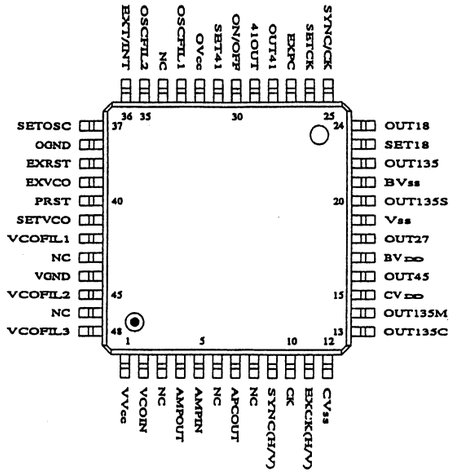

■ UPD71055GB-10 [NEC] (Parallel Input/Output Port)

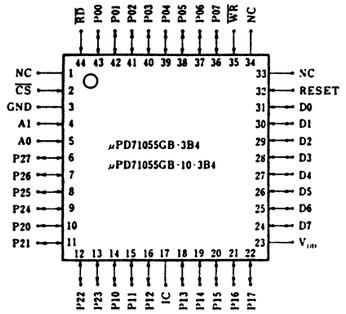

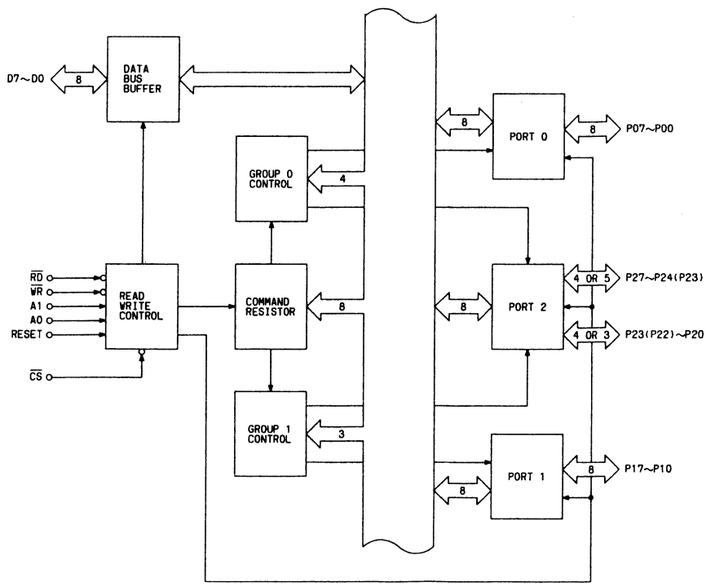

■ 74LCX16244MTD-X [NATIONAL SEMI CONDUCTOR] (16 bit Buffer/Line Driver)

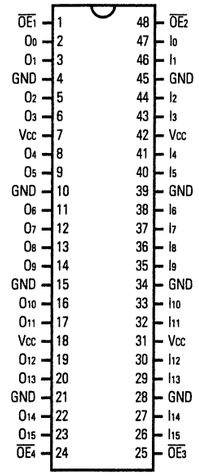

(Top View)

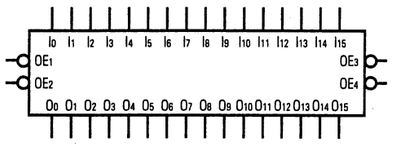

■ 74LCX16374MTD-X [NATIONAL SEMI CONDUCTOR] (16 bit D-Type Flip-Flop)

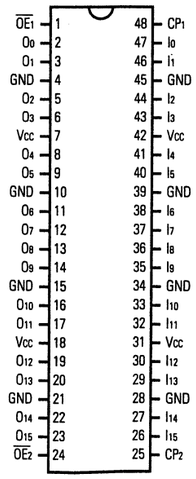

(Top View)

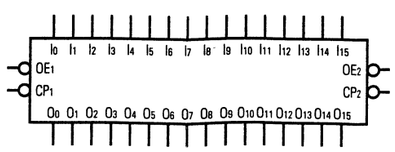

4-73

■ UPD784031GK-BE9 [NEC]
(16bit Single Chip Micro Computer)

(Top View)

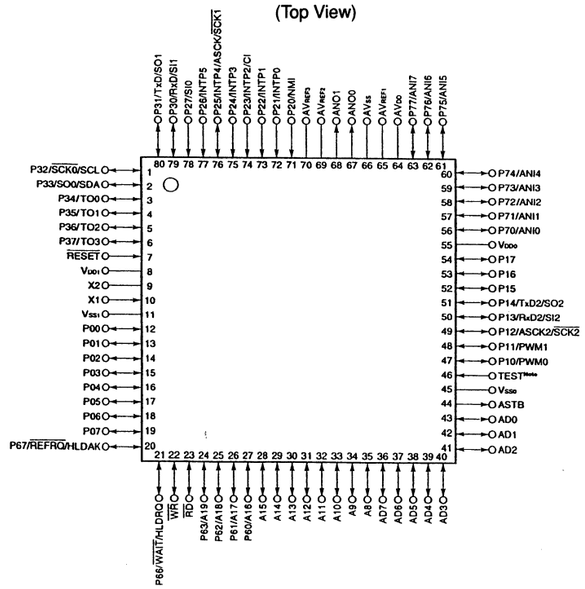

Note Connect the TEST pin to Vsso directly.

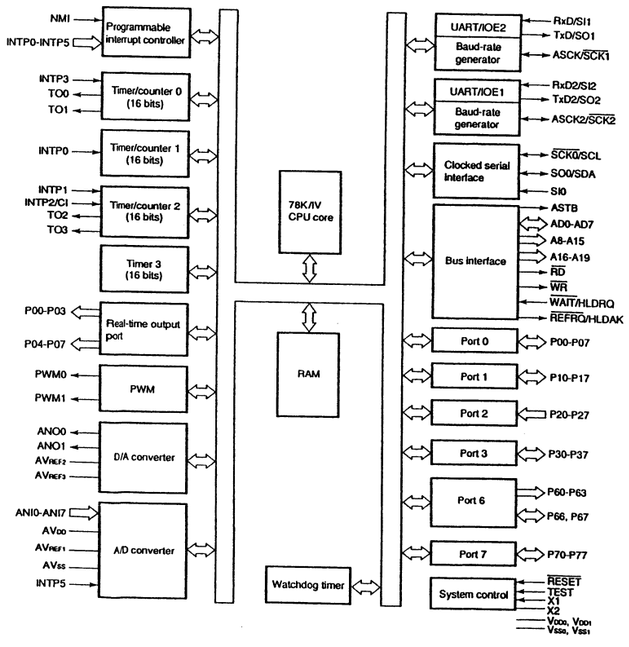

■ UPD78F0058GC001 [NEC]
(8 Bit Single Chip Microcomputer)

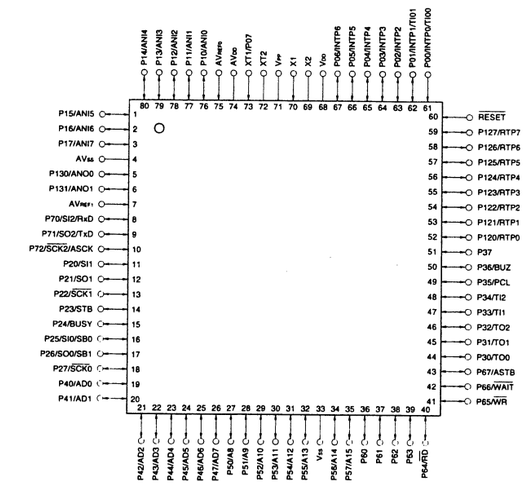

P00-P07	: Port0	SB0, SB1	: Serial Bus	WAIT	: Wait
P10-P17	: Port1	SI0-SI2	: Serial Input	ASTB	: Address Strobe
P20-P27	: Port2	SO0-SO2	: Serial Output	X1, X2	: Crystal (Main System Clock)
P30-P37	: Port3	SCK0-SCK2	: Serial Clock	XT1, XT2	: Crystal (Subsystem Clock)
P40-P47	: Port4	RxD	: Receive Data	RESET	: Reset
P50-P57	: Port5	TxD	: Transmit Data	ANI0-ANI7	: Analog Input
P60-P67	: Port6	ASCK	: Asynchronous Serial Clock	ANO0, ANO1	: Analog Output
P70-P72	: Port7	PCL	: Programmable Clock	AVDD	: Analog Power Supply
P120-P127	: Port12	BUZ	: Buzzer Clock	AVSS	: Analog Ground
P130, P131	: Port13	STB	: Strobe	AVREF0, 1	: Analog Reference Voltage
RTP0-RTP7	: Real-Time Output Port	BUSY	: Busy	VDD	: Power Supply
INTP0-INTP6	: Interrupt from Peripherals	AD0-AD7	: Address/Data Bus	VPP	: Programming Power Supply
TI00, TI01	: Timer Input	A8-A15	: Address Bus	VSS	: Ground
TI1, TI2	: Timer Input	RD	: Read Strobe		
TO0-TO2	: Timer Output	WR	: Write Strobe		

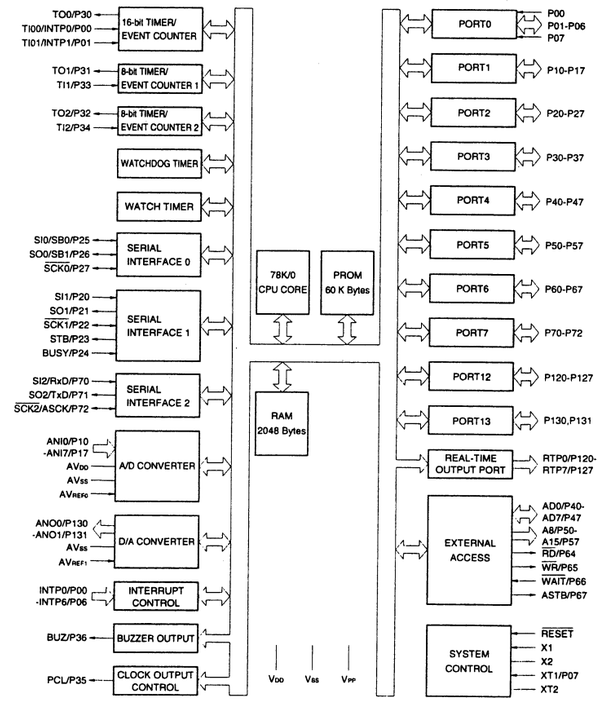

■ X24645S8-2.7-X [XICOR]
(8K x 8bit CMOS Serial EEPROM)

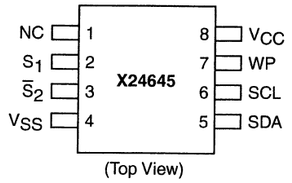

(Top View)

PIN NAMES

Symbol	Description
$S_1, \overline{S_2}$	Device Select Inputs
SDA	Serial Data
SCL	Serial Clock
WP	Write Protect
V_{SS}	Ground
V_{CC}	Supply Voltage
NC	No Connect

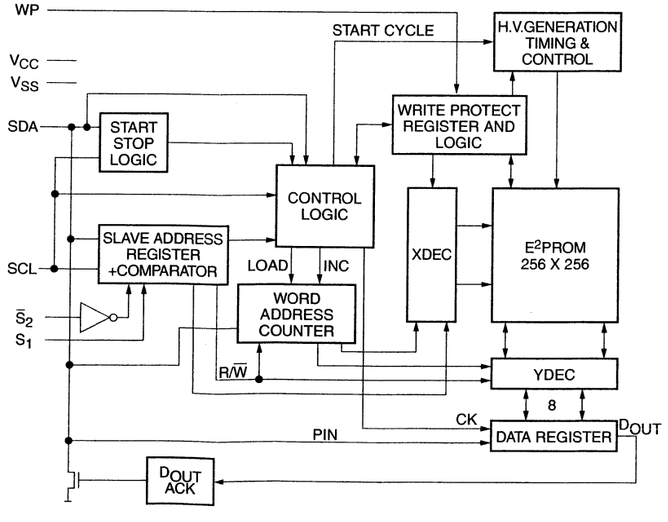

■ X25057M8-2.7-X [XICOR]
(SPI Serial EEPROM)

8 Lead SOIC/PDIP

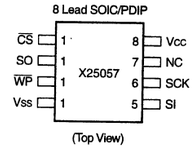

(Top View)

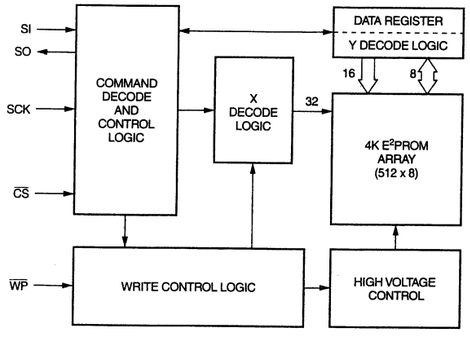

4-74

■ MSM7664TB [OKI]
(NTSC/PAL Digital Video Decoder)

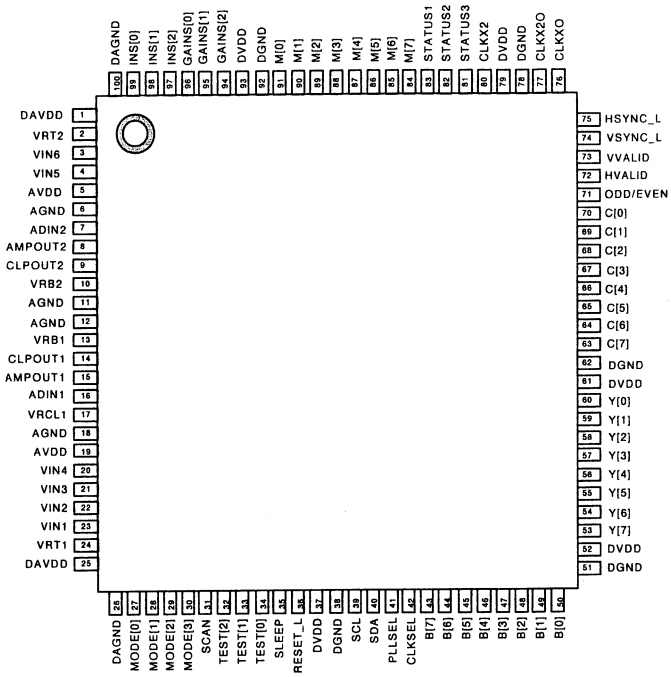

(Top View)

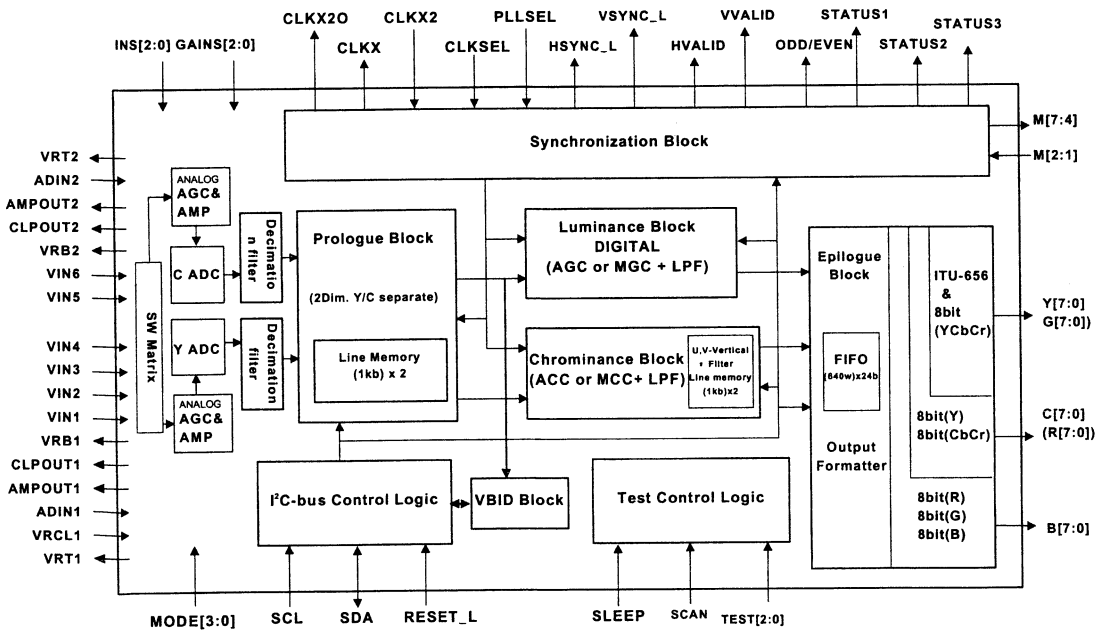

■ NJM062V-X [JRC]
(J-FET Input Op.Amp)

(Top View)

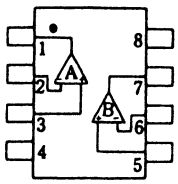

1. A OUTPUT
2. A−INPUT
3. A+INPUT
4. V⁻
5. B+INPUT
6. B−INPUT
7. B OUTPUT
8. V⁺

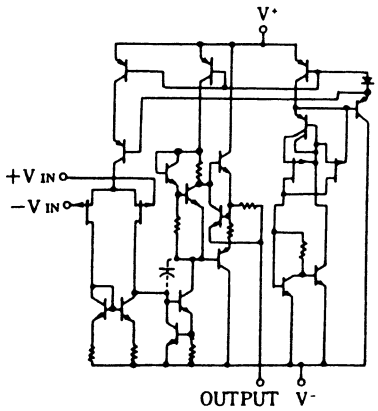

■ NJM2068M-D-X [JRC]
(Dual Low-Noise Op.Amp)

(Top View)

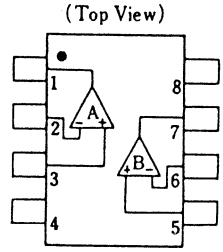

1. A OUTPUT
2. A−INPUT
3. A+INPUT
4. V⁻
5. B+INPUT
6. B−INPUT
7. B OUTPUT
8. V⁺

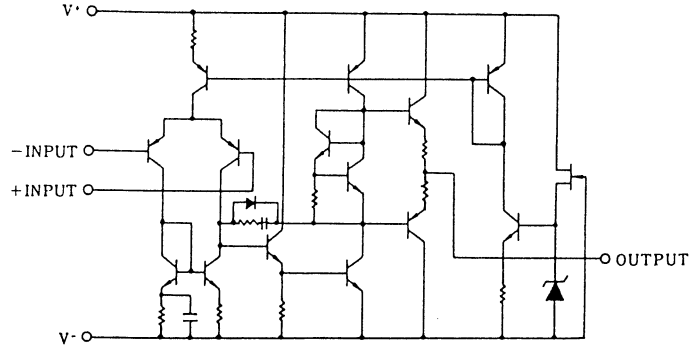

■ NJM1496V-X [JRC]
(Balanced Modulator)

(Top View)

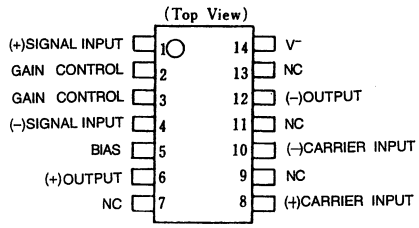

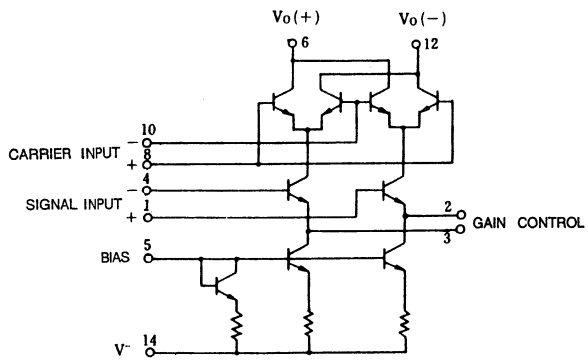

■ NJM2904M-X [JRC]
(Dual Op.Amp.)

(Top View)

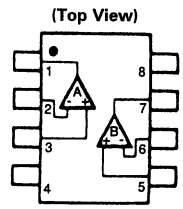

Pin Assignment

1. A OUTPUT
2. A−INPUT
3. A+INPUT
4. GND
5. B+INPUT
6. B−INPUT
7. B OUTPUT
8. V⁺

■ Equivalent Circuit (2 circuits in a chip)

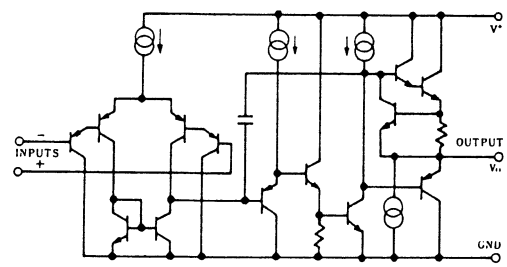

SECTION 5
EXPLODED VIEWS AND PARTS LIST

● **SAFETY PRECATION**

Parts identified by the ⚠ symbol are critical for safety.
Replace only with specified parts numbers.

● **NOTE**

Parts not denoted by parts numbers are not supplied by JVC.

■ CAMERA HEAD ASSEMBLY PARTS LIST M1

M1MM□□□□

Symbol No.	Part No.	Part Name	Description
1	SC10234-001	FRONT FRAME	
2	SC44847-050	SHIELD TUBE	
3	SC42550-011	C.H.HOLDER	
4	SC32296-001	FILTER KNOB	
5	SC46517-001	GEAR HOLDER	
6	SC32390H-001	TG.BRACKET(1)	
7	SC32292-001	TG.BRACKET(2)	
9	SC46518-001	VR KNOB	
10	SC46422-001	CUSHION	
11	SC44828-011	KNOB	
12	SC43825-002	LENS CAP	
14	SC32308-001	FILTER BASE	
15	SC46524-001	F.SHAFT	
16	SC46523-001	F.I.GEAR	
17	SC44491-001	F.I.SHAFT	
18	SC31301-001	FILTER WHEEL	
19	SC43840-001	ACTIVE FILTER	CLEAR (3200K)
20	SC43842-002	ACTIVE FILTER	BROWN (5600K+1/8ND)
21	SC43842-004	ACTIVE FILTER	DARK BROWN (5600K+1/64ND)
22	SC44488-001	F.SHEET	
23	SC45539-002	F.W.SHAFT	
24	SC44482-002	F.STOPPER	
25	SC44511-002	F.SPRING	
26	SC32309-001	FILTER COVER	
27	SC44676-005	F.CAP ASSEMBLY	
28	SC84529-001	FL BOARD	
29	QGA1501C1-05	CONNECTOR	5PIN
35	SC46536-001	VR SHAFT	
⚠ 36	SCV2337-1012BD	FFC	IF TO SWF CN35
⚠ 37	SCV2803-2405B	FFC	TG TO CAM CN14
⚠ 38	SCV2803-3018B	FFC	MT TO CAM CN21
39	QQR0895-008	FPC CORE	
⚠ 40	SCM1115-N0A	OPTICAL ASSEMBLY	U MODEL
⚠	SCM1115-P0A	OPTICAL ASSEMBLY	E MODEL
40A	SC31305-003	MOUNT RING	
40B	SC40779-003	MOUNT SCREW	
40C	SC43855-001	LEVER	
40D	QYSSSP2605M	SCREW	M2.6 x 5
⚠ 40E	SCV2803-2008B	FFC	IS TO TG
40F	SC46381-002	CUSHION	
42	QQR1078-001	FPC CORE	
44	SC45985-005	SHIELD FORM	
S1	QYSDSP3006M	SCREW	M3 x 6
S2	QYSDSF2006M	SCREW	M2 x 6
S3	QYYASPR3004M	SCREW	M3 x 4
S6	QYSSSPT2040M	SCREW	M2 x 4.0
S7	SC43397-009	SCREW	
S8	QYSPSPT2050M	SCREW	M2 x 5.0
S9	QYSPSPT2040M	SCREW	M2 x 4.0
S10	QYSPSPT1730M	SCREW	M1.7 x 3.0
S12	QYSPSPT2030M	SCREW	M2 x 3.0
S19	QYSDSP2605Z	SCREW	M2.6 x 5

5.1 CAMERA HEAD ASSEMBLY M1

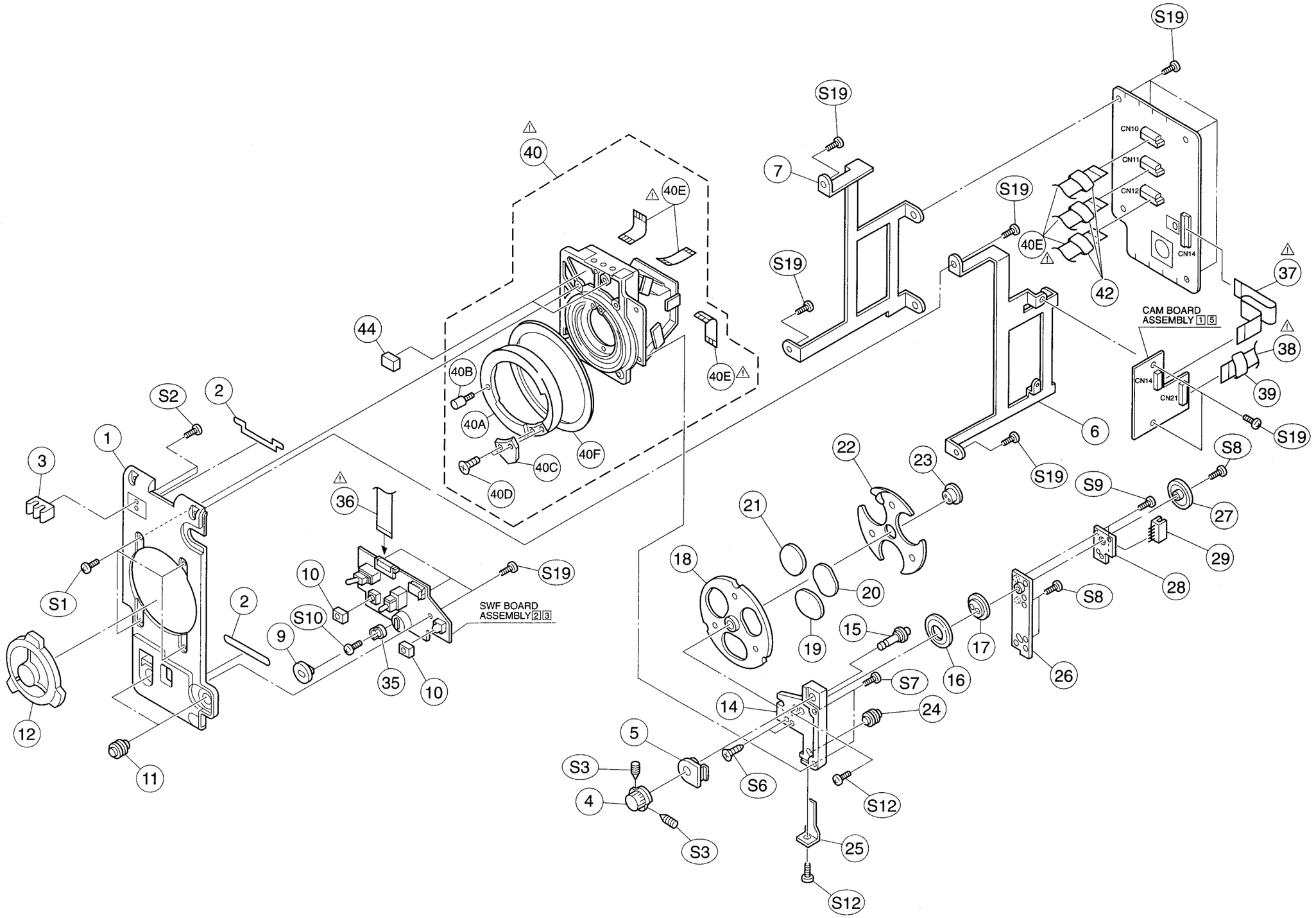

5.2 CABINET ASSEMBLY M2

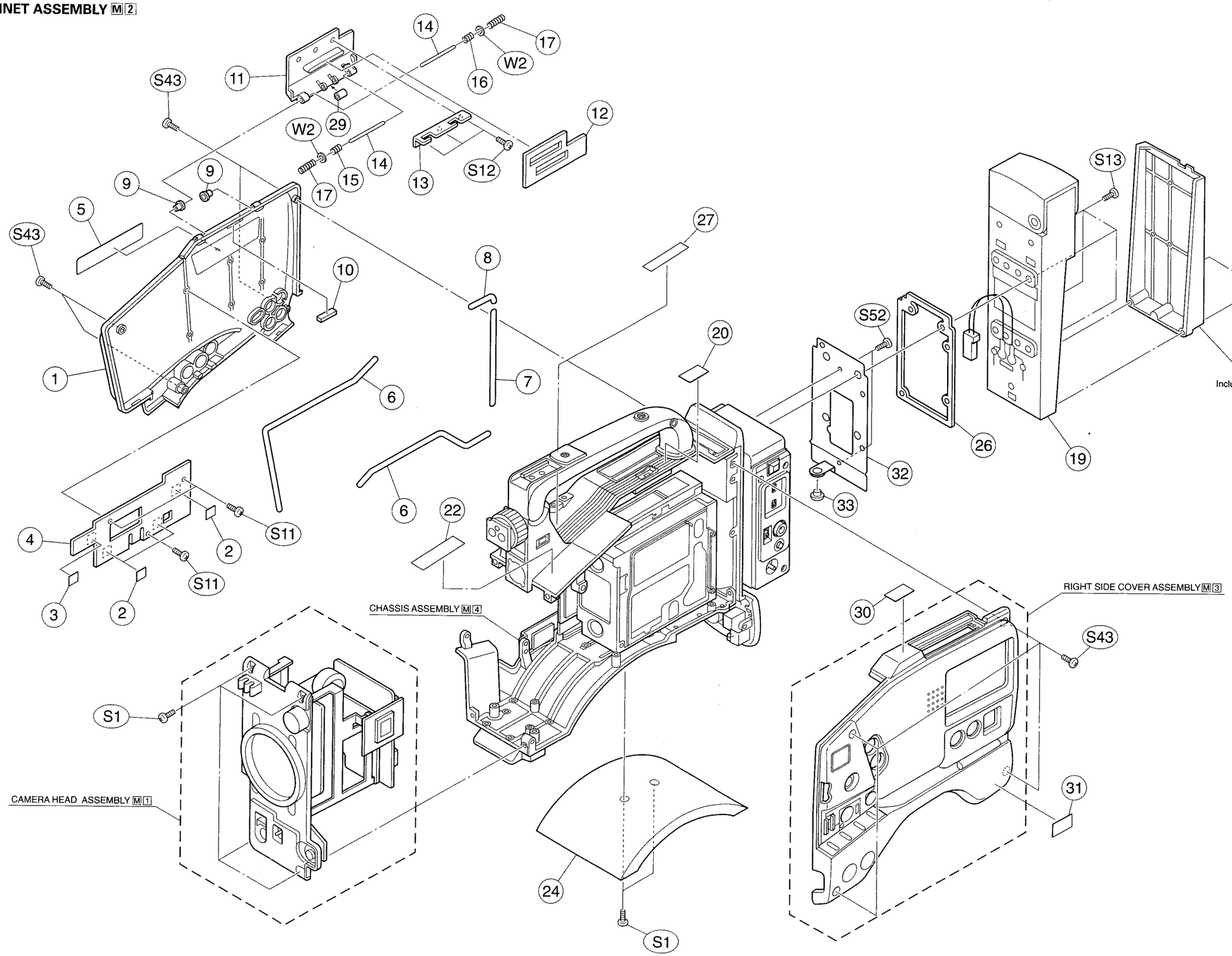

■ CABINET ASSEMBLY PARTS LIST M2

M2MM□□□□

Symbol No.	Part No.	Part Name	Description
1	SC10246-041	L.SIDE COVER	
2	SC46265-004	RUBBER SHEET	
3	SC46265-009	RUBBER SHEET	
4	SC32402H-001	HEAT SINK	
5	SC32285-003	ESCUT.PLATE	
6	SC46410-210	GASKET	
7	SC46410-115	GASKET	
8	SC46410-035	GASKET	
9	SC46549-001	BUSHING	
10	SC46555-001	CUSHION	
11	SC20723-002	CASSETTE COVER	
12	SC46541-011	COVER PAD	
13	SC46542-001	LOCK BRACKET	
14	SC46543-001	HINGE SHAFT	
15	SC46540-011	TORSION SPRING	
16	SC46540-012	TORSION SPRING	
17	SC46546-001	C.SPRING	
19	SCV2978-001	BATTERY HOLDER	
20	–	NAME PLATE	
22	SC43658-001	LABEL	U MODEL
	PU54392-1	LABEL	E MODEL
24	SC10241-001	SHOLDER PAD	
26	SC46777H-001	BH CUSHION	
27	SC46608-021	LABEL	
29	SC46593-001	COLLAR	
30	SC45925-001	CE LABEL	E MODEL
31	QZL1001-012	UL LABEL	U MODEL
32	SC32394H-001	REAR COVER	
33	SC44693-001	CAP	
S1	QYSDSP3006M	SCREW	M3 x 6
S11	QYSPSPT2630M	SCREW	M2.6 x 3.0
S12	QYSPSPT2030M	SCREW	M2 x 3.0
S13	QYSDSP3008M	SCREW	M3 x 8
S43	SC43397-008	SCREW	
S52	QYSPSPT2640M	MINI SCREW	M2.6 x 4.0
W2	QYREE1200X	E.RING	

■ RIGHT SIDE COVER ASSEMBLY PARTS LIST M3

M3MM□□□□

Symbol No.	Part No.	Part Name	Description
1	SC10238-003	R.SIDE COVER	
2	SC10242-001	CHEEK PAD	
3	SC46410-290	GASKET	
4	SC46410-190	GASKET	
5	SC46410-130	GASKET	
6	SC46410-115	GASKET	
7	SC46410-035	GASKET	
8	SC44974-010	STUD	
9	SCV2903-001	SPEAKER	
10	SC46228-001	SHEET	
11	SC44537-001	SP.BRACKET	
12	SC45246-001	KNOB	
13	SC44556-011	TC.KNOB	
14	SC46397-001	PLATE	
15	SC44828-002	SWITCH CAP	
16	SC43451-001	LED LENS	
17	SC46503-002	LABEL	
18	SC32287-001	SW.NAME PLATE	
19	SC46547-001	BRACKET	
21	SC20743H-001	PANEL COVER	
22	SC46539-002	RUBBER MAGNET	
23	SC46801H-001	PANEL WINDOW	
24	SC46548-001	BATTERY COVER	
25	SC46231-002	PANEL SHAFT	
26	SC46579-001	SHAFT HOLDER	
27	SC46509-001	PANEL KNOB	
28	SC32400H-001	AUDIO PANEL	
29	SC46536-001	KNOB SHAFT	
30	SC32289-001	VOLUME KNOB	
31	SC45245-011	SLIDE KNOB	
32	PRD42909-04	PLATE	
33	SC46510-001	PLATE(LCD)	
34	SC46511-001	LCD CUSHION	
35	PRD43835	KNOB(OPE)	
36	SC46508-001	SELECT KNOB	
37	SC46357-001	CUSHION	
38	SC32305-002	OPE.COVER(U)	
39	SC32306-003	OPE.COVER(B)	
40	SC46527-001	OPERATION PANEL	
41	SC32307-001	OPERATION KNOB	
42	SC46528-001	OPE.SHAFT	
44	SC46532-001	SPRING(1)	
⚠ 45	SCV2337-1005BD	FFC	SWRU TO SWRM
⚠ 46	SCV2803-1515B	FFC	SWRU TO IF
47	SC46545-001	BOARD HOLDER	
⚠ 48	SCV2803-4016B	FFC	AUD/LCD TO MT
⚠ 49	SCV2803-3015B	FFC	AUD/LCD TO MT
50	SC46537-001	VR.KNOB	
51	SC46584-001	STAY (1)	
52	SC46584-002	STAY (2)	
⚠ 53	SCV2803-5018B	FFC	SS/CP CN101 TO MT
⚠ 54	SCV2803-4016B	FFC	SS/CP CN401 TO MT
⚠ 55	SCV2337-0808BD	FFC	OPE TO AUD/LCD
⚠ 56	SCV2803-2008B	FFC	AU/LC TO SS/CP
58	SC46610-001	SHEET	
60	SC46631-001	SHEET	
61	SC46796H-001	SLIDE KNOB	
62	SC46821H-001	PLATE	
S10	QYSPSPT1730M	SCREW	M1.7 x 3.0
S13	QYSDSF2606Z	SCREW	M2.6 x 6
S14	QYSDSP2606Z	SCREW	M2.6 x 6
S15	QYSDSP2604Z	SCREW	M2.6 x 4
S16	QYSDSP2604M	SCREW	M2.6 x 4
S17	QYSDSF2004M	SCREW	M2 x 4
S19	QYSDSP2605Z	SCREW	M2.6 x 5
S40	QYSPSPT2080M	SCREW	M2 x 8.0
W1	QYWWS629205Z	WASHER	
W2	QYREE1200X	E.RING	

5.3 RIGHT SIDE COVER ASSEMBLY M 3

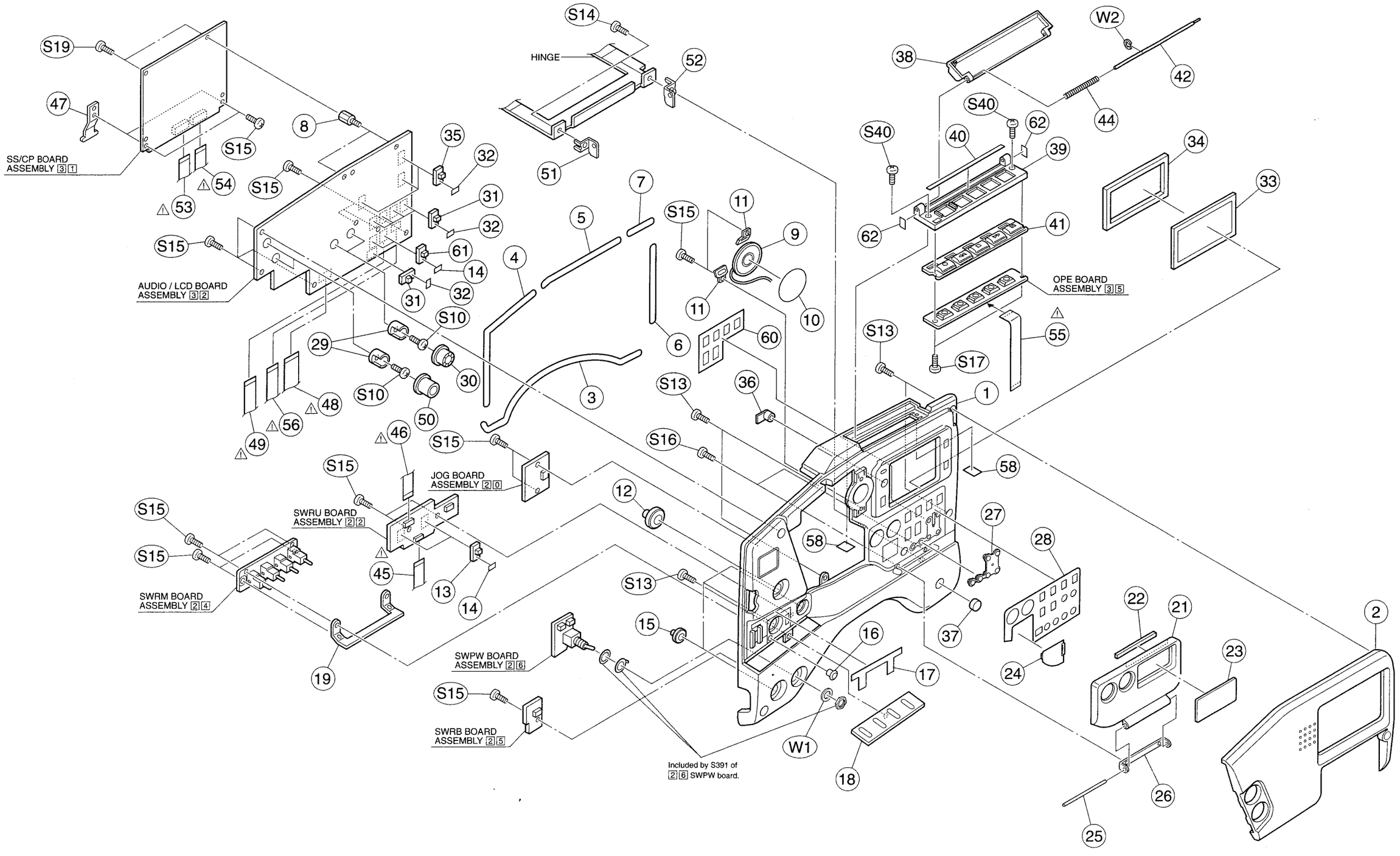

5.4 CHASSIS ASSEMBLY M 4

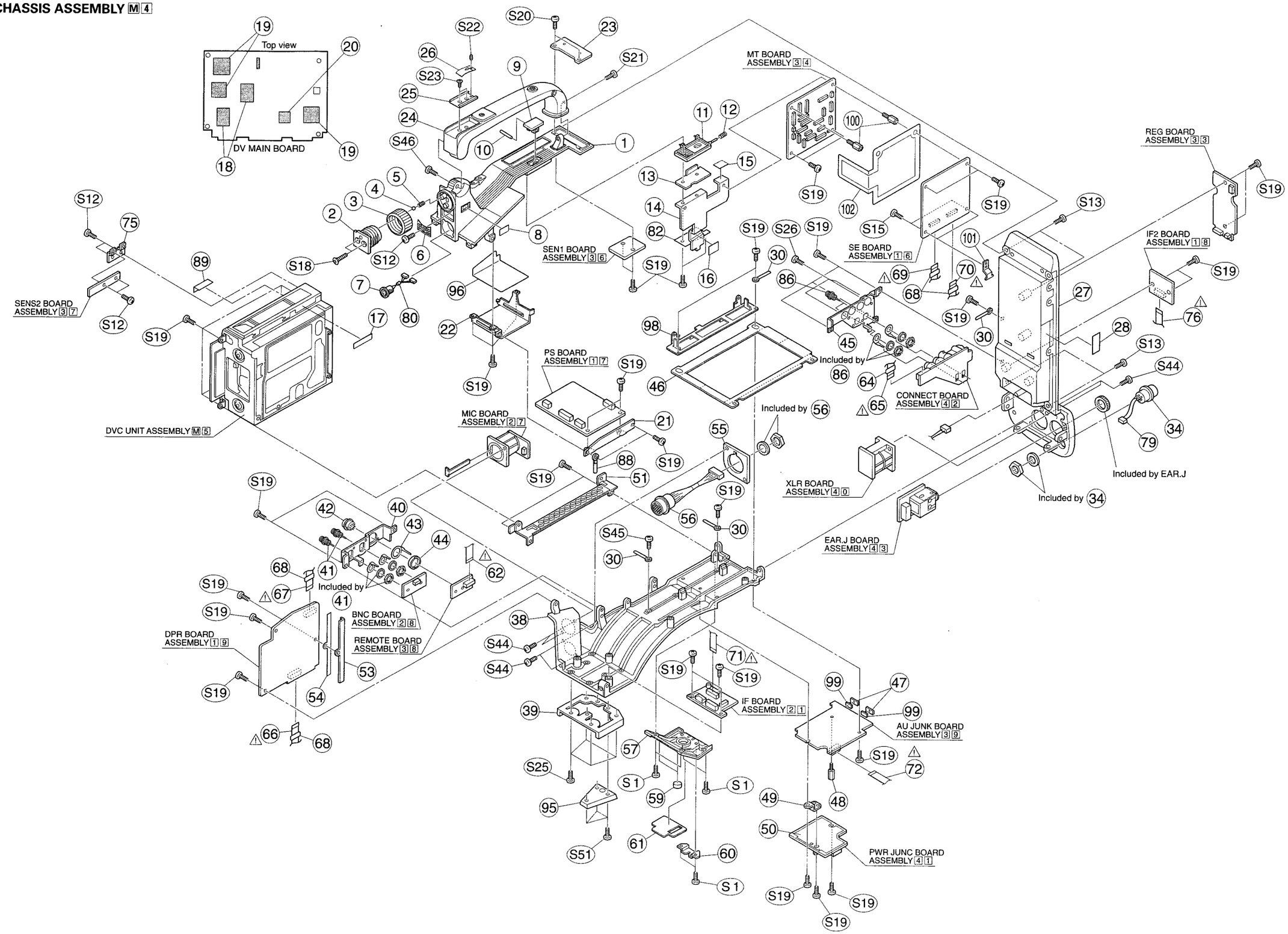

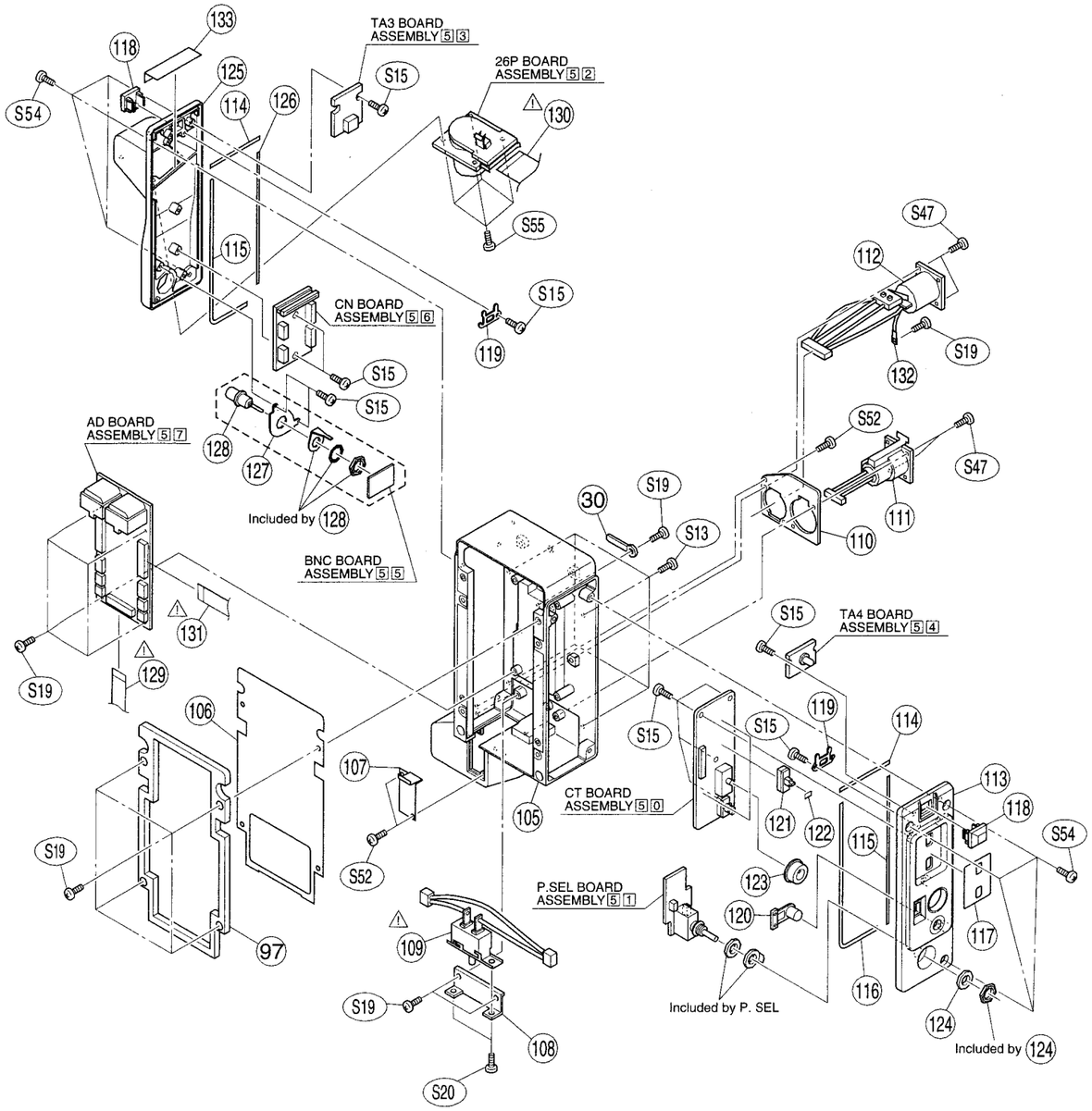

■ CHASSIS ASSEMBLY PARTS LIST M4

M4MM□□□□

Symbol No.	Part No.	Part Name	Description
1	SC10236-001	TOP FRAME	
2	SC31861-001-K	VF BASE	
3	SC45127-002	VF RING	
4	SC40465-045	STEEL BALL	
5	SC45107-001	SPRING	
6	SC46531-001	PLATE	
7	SCV0238-06S	VF CONNECTOR	
8	SC46544-001	PLATE	
9	SC46529-001	EJECT KNOB	
10	QYPRE1408	SPRING PIN	
11	SC32312-001	SLIDE PLATE	
12	SC46533-001	SPRING(2)	
13	SC46525-001	SLIDE COVER	
14	SC32401H-001	HEAT SINK	
15	SC46265-007	RUBBER SHEET	
16	SC46265-005	RUBBER SHEET	
17	SC46592-001	AL SHEET	
18	SC46265-006	RUBBER SHEET	
19	SC46265-007	RUBBER SHEET	
20	SC46265-008	RUBBER SHEET	
21	SC46795H-001	PS BRACKET	
22	SC32391H-001	RAIL BRACKET	
23	SC32303-001	REAR COVER	
24	SC10240-002	HANDLE ASSEMBLY	
25	SC40886-001	SHOE	
26	C40936	SPRING	
27	SC10248H-001	REAR FRAME	
28	–	LABEL	SSF ID
30	PU49485-4	WIRE CLAMP	
34	QNZ0257-001	CONNECTOR(4S)	DC INPU T
38	SC10235-001	BOTTOM FRAME	
39	SC32367-001	FRONT BASE .	
40	SC32294-001	CN BRACKET(1)	
41	QNZ0187-001	BNC CONNECTOR	VIDEO OUT/GENLOCK/AUX IN
42	QNZ0276-001	CONNECTOR	VTR REMOTE
43	SC45831-001	LUG	
44	SC45586-001	NUT	
45	SC32369-001	CN BRACKET(2)	
46	SC32290-002	HINGE	
47	SC46522-001	SHEET	
48	SC44974-007	STUD	
49	SC46552-001	JUNC BRACKET	
50	SC46556-001	JUNC SHEET	
51	SC32293-001	VTR BRACKET	
53	SC46553-001	CAM2 BRACKET	
54	SC46567-001	CAM2 SHEET	
55	SC46554-001	LENS BRACKET	
56	SCV3022-008	LENS CONNECTOR	
57	SC10244-001	BOTTOM COVER	
59	SC46520-001	CAP	
60	SC46670-001	REAR BASE	
61	SC46774H-001	PLATE	
⚠ 62	SCV2337-0610BD	FFC	REMOTE TO MT
64	QQR0895-008	FILTER	
⚠ 65	SCV2337-1612BD	FFC	CONNECT TO MT
⚠ 66	SCM1121-00A	FFC	CAM2 TO MT (SCV2803-5030B)
⚠ 67	SCM1122-00A	FFC	CAM2 TO MT (SCV2803-5042B)
68	QQR0895-011	FILTER	
⚠ 69	SCV2803-5010B	FFC	SE TO MT CN251
⚠ 70	SCV2803-4011B	FFC	SE TO MT CN252
⚠ 71	SCM1120-00A	FFC	IF TO MT (SCV2803-3018B)
⚠ 72	SCV2803-2008B	FFC	AU.JUNK TO MT
75	SC46551-001	SENSOR BRACKET	

5-9

Symbol No.	Part No.	Part Name	Description
⚠ 76	SCV2803-4016B	FFC	IF2 TO MT
79	WJM0157-001A	DC OUT WIRE	
80	QQR0594-001	FERRITE CORE	
82	SC46589-001	SHEET	
86	QNZ0187-001	BNC RECEPTACLE	TC IN/OUT
88	PU49485-3	WIRE CLAMP	
89	SC46683-001	UNIT SHEET	
95	SCV3023-001	SHOE	
96	SC32405H-001	SHIELD PLATE	
97	SC32392H-003	AD CUSHION	
98	SC32389H-001	MT BRACKET	
99	SC46773H-001	SLIDE KNOB	
100	SC44974-009	STUD	
101	PRD44893	BOARD HOLDER	
102	SC32429H-001	SHIELD PLATE (2)	
105	SC10249H-001	AD FRAME	
106	SC32393H-001	FRONT COVER	
107	SC46776H-001	CN BRACKET	
108	SC46775H-001	BR BRACKET	
⚠ 109	QMH0016-001	CIR BREAKER	
110	SC46783H-001	CN PLATE	
111	QNZ0252-001	XLR CONNECTOR	
112	QNZ0429-001	CIR CONNECTOR	
113	SC20739H-001	R.SIDE COVER	
114	SC46410-035	GASKET	
115	SC46410-100	GASKET	
116	SC46410-140	GASKET	
117	SC46781H-001	SELECT PANEL	
118	SC46779H-001	TALLY CAP	
119	SC46778H-001	TALLY PLATE	
120	SC46780H-001	SELECT KNOB	
121	SC46794H-001	SLIDE KNOB	
122	SC46397-001	PLATE	
123	SC46537-001	VR.KNOB	
124	QYWWS629205Z	WASHER	
125	SC20740H-001	L.SIDE COVER	
126	SC46410-070	GASKET	
127	SC46782H-001	BNC PLATE	
128	QNZ0187-001	BNC RECEPTACLE	
⚠ 129	SCV2803-3010B	FFC	IF2 TO AD
⚠ 130	PGW0203-060260	FFC	CN TO 26P
⚠ 131	SCV2337-2008BD	FFC	CT TO AD
132	SC43876-006	LUG ASSY	
133	SC46820H-001	PLATE	
S1	QYSDSP3006M	SCREW	M3 x 6
S12	QYSPSPT2030M	SCREW	M2 x 3.0
S13	QYSDSP3008M	SCREW	M3 x 8
S15	QYSDSP2604Z	SCREW	M2.6 x 4
S18	QYYYSP4025M	BOLT	
S19	QYSDSP2605Z	SCREW	M2.6 x 5
S20	QYSPSP3006M	SCREW	M3 x 6
S21	QYSPSP5012M	SCREW	M5 x 12
S22	SC44821-001	SCREW	
S23	QYSSSP3006N	SCREW	M3 x 6
S25	QYSSSP4006N	SCREW	M4 x 6
S26	QYSDSF3006M	SCREW	M3 x 6
S44	SC46625-001	SCREW	
S45	QYSDSP3004Z	SCREW	M3 x 4
S46	QYSPSP5020M	SCREW	M5 x 20
S47	QYSPSPT2660N	SCREW	M2.6 x 6.0
S51	QYSDSP4006R	SCREW	
S52	QYSPSPT2640M	SCREW	M2.6x4.0
S54	QYSDSP3006N	SCREW	M3x6
S55	QYSPSP3008N	SCREW	M3x8

■ DVC UNIT ASSEMBLY PARTS LIST M5

M5MM□□□□

Symbol No.	Part No.	Part Name	Description
1	PRD31397	SHIELD CASE(P/R)	
2	PRD31398	SHIELD CASE(DC)	
3	PRD45263	INSULATOR	
4	PRD45247	EARTH PLATE	
5	PRD45259	P.W.B.BRACKET	
⚠ 6	SCV2803-1810B	FFC WIRE	MAIN401-JUNC
⚠ 7	SCV2803-2003B	FFC WIRE	MAIN402-PR606
⚠ 8	SCV2803-2003B	FFC WIRE	MAIN501-PR901
⚠ 9	SCV2803-1003B	FFC WIRE	MAIN108-PR608
10	PU49485-3	WIRE CLAMP	
11	–	LABEL	IEEE1394 ID
12	PRD31393	SIDE COVER(L)	
13	PGZ02634	DAMPER	
14	PRD31394	SIDE COVER(R)	
15	PRD31395	FRONT COVER	
16	PRD31409-01-04	CASSETTE SLOT	
17	PRD31396	REAR COVER	
18	PRD45262	INSULATOR	
19	PRD20680	BASE FRAME	
20	PRD30030-127	PAD	
21	PRD31390-01-01	FRONT FRAME	
22	PRD31391	C.H.DOOR	
23	LP40360-001A	TORSION SPRING	
25	PRD31399A	CLEANER BKT.ASSEMBLY	
26	PRD30024-107	TENSION SPRING	
27	PRD31401	DRIVE ARM	
28	PRD31402A-01	CLEANER ARM ASSEMBLY	
29	PRD45309A	CLEANER ASSEMBLY	
30	PRD30024-107	TENSION SPRING	
31	PGZ02629	DC-SOLENOID	
32	PRD30023-65	COMPRESS SPRING	
33	PRD31392	REAR FRAME	
34	QSD0002-001	DEW SENSOR	
35	PRD45284	BRACKET(C.H.)	
36	PRD45315	GUIDE BRACKET	
37	PRD31501	TAPE GUIDE	
S16	QYSDSP2604Z	SCREW	M2.6 x 4
S29	QYSPSP2004Z	SCREW	M2 x 4
S30	PRD44099	SCREW	
S31	QYSDSP2003Z	SCREW	M2 x 3
S33	PRD45246	SCREW	
S34	QYSPSP2003Z	SCREW	M2 x 3
S35	QYSDSP2006Z	SCREW	M2 x 6
S38	QYSDSP2002N	SCREW	M2 x 2
W3	PRD45316	SLIT WASHER	
W4	PQM30017-27	SLIT WASHER	

5.5 DVC UNIT ASSEMBLY [M][5]

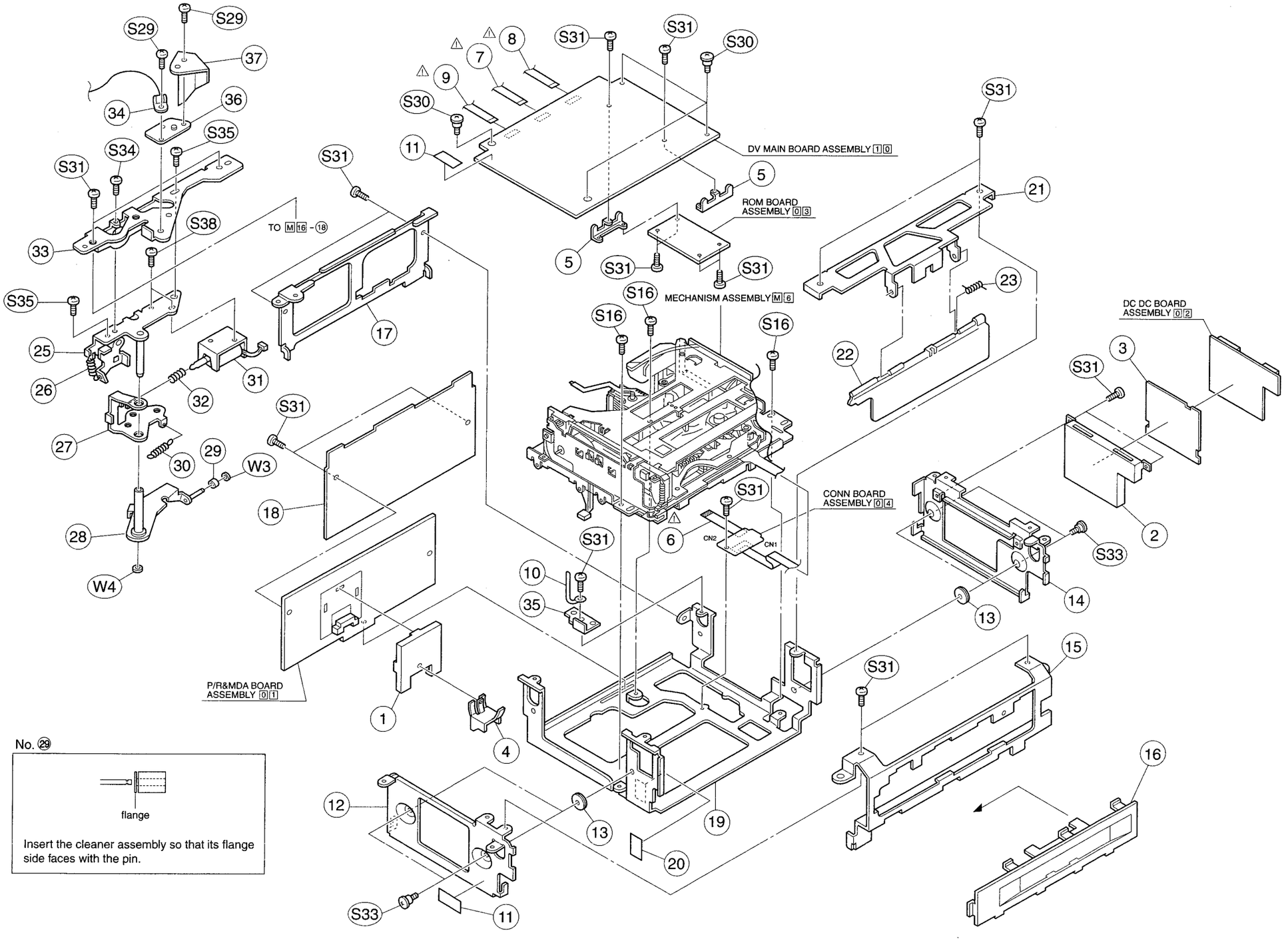

No. (29)

Insert the cleaner assembly so that its flange side faces with the pin.

5.6 MECHANISM ASSEMBLY M6

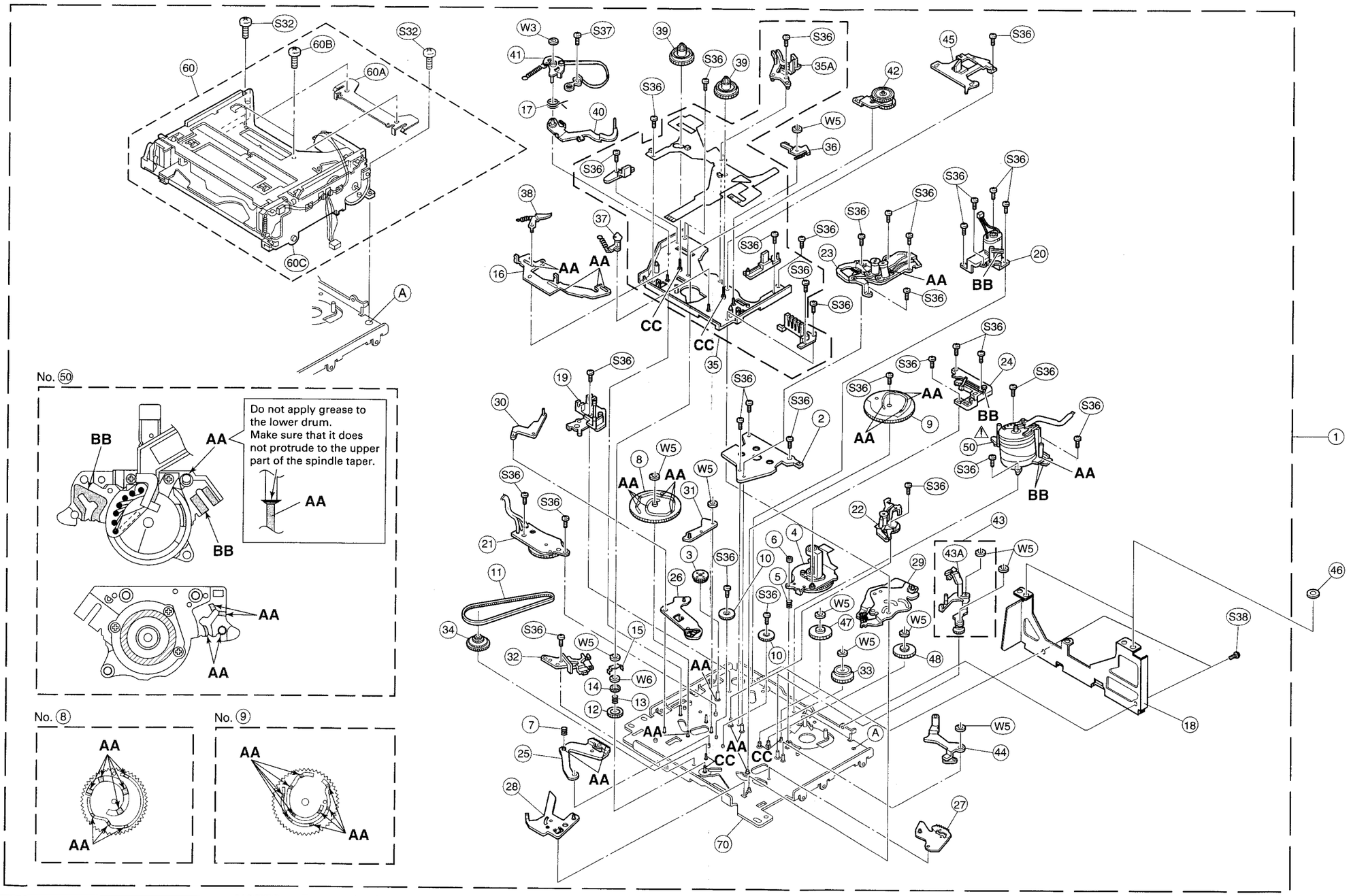

Classification	Part No.	Symbol in drawing
Grease	KYODO-SH-P	**AA**
Grease	RX-410R	**BB**
Oil	YTU94027	**CC**

NOTES:
- This section indicates that the grease and oil are to be applied on locations marked with **AA**, **BB** and **CC**.
  During checking and servicing, check if grease has been applied on the locations marked with **AA**, **BB** and oil on the locations marked with **CC**.
- Apply also grease and oil on some locations in the main cam gear and the cam groove at the rear side of the sub cam gear.

5-12

■ MECHANISM ASSEMBLY PARTS LIST M6

M6MM□□□□

Symbol No.	Part No.	Part Name	Description
1	PRD31442A-10	MECHA ASSEMBLY	
2	LY30358-001A	DRUM BASE DECK	
3	LY30343-001A	WORM WHEEL 2	
4	QAR0012-002	CAPSTAN MOTOR	
5	LY30002-003A	COMPRES.SPRING	
6	LY41390-001A	ADJUST NUT	
7	LY40224-001A	COLLAR	
8	LY10060-003A	MAIN CAM	
9	LY20102-001A	SUB CAM	
10	YQ44560-1-2	CONNECT GEAR 2	
11	PRD45310	TIMING BELT	
12	LY40246-001A	C.LOCK GEAR(1)	
13	LY30002-009A	COMPRES.SPRING	
14	LY40247-001A	C.LOCK GEAR(2)	
15	LY40248-001A	PUSH PLATE	
16	LY20109-001B	CONTROL PLATE	
17	LY41243-001A	TOR.SPRING	
18	PRD31418-01-03	A.H.C.FRAME	
19	LY40237-001C	ENT.G.BASE ASSEMBLY	
20	LY30340-003B	MOTOR BKT.ASSEMBLY	
21	LY41190-002A	ROTARY EN.ASSEMBLY	
22	YQ31873C	G.RAIL(S) ASSEMBLY	
23	LY20097-001C	G.RAIL(T) ASSEMBLY	
24	LY30345-001A	M.CATCHER ASSEMBLY	
25	LY40223-001A	ARM GEAR 1 ASSEMBLY	
26	LY40235-002B	CENT.ARM ASSEMBLY	
27	LY40279-001A	ARM GEAR 2 ASSEMBLY	
28	LY40228-001A	C.LOCK LEVER ASSEMBLY	
29	LY30347-001A	CHARGE ARM ASSEMBLY	
30	LY40236-001A	T.CTL.ARM ASSEMBLY	
31	LY40233-001A	B.CTL.ARM ASSEMBLY	
32	LY40242-001C	BASE PLATE ASSEMBLY	
33	PRD31445A	R.D.PULLEY ASSEMBLY	
34	LY40239-003A	CENT.GEAR ASSEMBLY	
35	PRD31443A	S.DECK ASSEMBLY(G)	
35A	LY20108-001B	LED PRISM	
36	LY40257-001A	SUB BRAKE ASSEMBLY	
37	LY40259-001A	M.BRAKE(T) ASSEMBLY	
38	LY40260-003A	M.BRAKE(S) ASSEMBLY	
39	LY40255-001A	REEL DISK ASSEMBLY	
40	LY41245-001B	TENSION ARM SA.	
41	LY41246-003B	B.ARM PLATE SA.	
42	LY30370-002C	SWING ARM ASSEMBLY	
43	LY30380-001D	EXIT G.ARM ASSEMBLY	
43A	LY41250-001A	CLEAN.ARM ASSEMBLY	
44	LY30374-001B	P.R.ARM ASSEMBLY	
45	LY40280-003A	REEL COVER ASSEMBLY	
46	PRD45341	SPACER	NOT INCLUDED IN MECHA ASSEMBLY
47	PRD45311	R. DRIVE GEAR 1	
48	PRD45312	R. DRIVE GEAR 2	
⚠ 50	YDV2097C	DRUM ASSEMBLY	
60	PGS30576A	C.HOUSING ASSEMBLY	
60A	PRD45307	BRACKET	
60B	QYSDST2005Z	SCREW	M2 x 5
60C	LY30428-003D	C. HOUSING	
70	PRD10428A	MAIN DECK ASSEMBLY	
S32	QYSDSP2005Z	SCREW	M2 x 5
S36	YQ43893	SCREW	M1.4 x 2
S37	YQ43893-7	SCREW	M1.4 x 2
S38	QYSDSP2002N	SCREW	M2 x 2
W3	PRD45316	SLIT WASHER	
W5	YQ44246	SLIT WASHER	
W6	YQ43933-2	WASHER	

SECTION 6
ELECTRICAL PARTS LIST

SAFETY PRECAUTION:
Parts identified by the ⚠ symbol are critical for safety. Replace only with specified parts numbers.
For maximum reliability and performance, all other replacement parts should be identical to those specified.

NOTE:
- Parts not denoted by parts numbers are not supplied by JVC.
- Abbreviations in this list are as follows:

RESISTORS
In the "Description" column:
All resistance values are in ohms (Ω).
k expresses kilo-ohm (1 000 ohms, kΩ).
M expresses mega-ohm (10^6 ohms, MΩ).

In the "Parts Name"column:
CAR.RESISTOR : Carbon Resistor
C.M.F.RESISTOR : Constant Metalized Film Resistor
COMP.RESISTOR: Composition Resistor
FUSI.RESISTOR : Fusible Resistor
M.F.RESISTOR : Metal Film Resistor
M.G.RESISTOR : Metal Graze Resistor
M.P.RESISTOR : Metal Plate Resistor
O.M.F.RESISTOR : Oxide Metalized Film Resistor
TRIM.RESISTOR : Trimerer Resistor
U.F.RESISTOR : Non-inflammable Resistor
VAL.RESISTOR : Valiable Resistor
W.W.RESISTOR : Wire Wound Resistor

CAPACITORS
In the "Description" column:
All capacitance values are in microfarad (μ F) unless otherwise indicated.
p expresses picofarad (10^{-12} farad,pF).

In the "Parts Name" column:
CER.CAPACITOR : Ceramic Capacitor
E.CAPACITOR : Electrolytic Capacitor
FILM CAPACITOR : Film Capacitor
M.F.CAPACITOR : Metalized Film Capacitor
MICA CAPACITOR : Mica Capacitor
MPP CAPACITOR : Metalized PolyPropylene Capacitor
MPPS CAPACITOR : Metalized PolyPhenylene Sulfied film Capacitor
M.M.CAPACITOR : Metalized Mylar Capacitor
MYLAR CAPACITOR : Mylar Capacitor
N.P.CAPACITOR : Non-Poler electrolytic Capacitor
P.P.CAPACITOR : PolyPropylene Capacitor
PPS CAPACITOR : PolyPhenylene Sulfied film Capacitor
P.S.CAPACITOR : PolyStyrene Capacitor
TAN.CAPACITOR : Tantal Capacitor
TRIM.CAPACITOR : Trimer Capacitor
VAL.CAPACITOR : Valiable Capacitor

Note: In the "Description" column of the parts list, (U) means the parts for the U version while (E) is for the E version.

Symbol No.	Part No.	Part Name	Description		
IC1	SCV1585-064	I.C.(M)	JVC	(U)	← for U version
	SCV1585-067	I.C.(M)	JVC	(E)	← for E version

6.1 PR & MDA BOARD ASSEMBLY PARTS LIST 01

SLK2088-01-01A 01

Symbol No.	Part No.	Part Name	Description	
IC601	BA6865KV	I.C.(M)	ROHM	
IC602	BA6417F-X	I.C.(M)	ROHM	
IC603	BA6254FS-X	I.C.(M)	ROHM	
IC901	AN3731FHQ	I.C.(M)	MATSUSHITA	
Q601	DTC144EUA-X	TRANSISTOR	ROHM	
Q602	2SB1302/ST/-X	TRANSISTOR	SANYO	
Q603	2SB1302/ST/-X	TRANSISTOR	SANYO	
Q604	2SB1302/ST/-X	TRANSISTOR	SANYO	
Q607	DTC144EUA-X	TRANSISTOR	ROHM	
Q608	2SB1302/ST/-X	TRANSISTOR	SANYO	
Q903	2SC4226/3-5/-X	TRANSISTOR	NEC	
Q905	2SD1979/S/-X	TRANSISTOR	MATSUSHITA	
Q906	2SD1979/S/-X	TRANSISTOR	MATSUSHITA	
Q907	2SC4226/3-5/-X	TRANSISTOR	NEC	
D602	DAP202U-X	DIODE	ROHM	
D603	DAP202U-X	DIODE	ROHM	
D605	MA736-X	DIODE	MATSUSHITA	
R601	NRSA63J-681X	M.G.RESISTOR	680	1/16W
R602	NRSA63J-124X	M.G.RESISTOR	120k	1/16W
R603	NRSA63J-472X	M.G.RESISTOR	4.7k	1/16W
R604	NRSA63J-104X	M.G.RESISTOR	100k	1/16W
R605	NRSA63J-223X	M.G.RESISTOR	22k	1/16W
R606	NRV142F-R22X	C.M.F.RESISTOR	0.22	1/4W
R608	NRS12BJ-1R0W	M.G.RESISTOR	1	1/2W
R609	NRS12BJ-1R0W	M.G.RESISTOR	1	1/2W
R610	NRSA63J-102X	M.G.RESISTOR	1k	1/16W
R611	NRSA63J-102X	M.G.RESISTOR	1k	1/16W
R612	NRSA63J-274X	M.G.RESISTOR	270k	1/16W
R613	NRSA63J-272X	M.G.RESISTOR	2.7k	1/16W
R614	NRSA63J-154X	M.G.RESISTOR	150k	1/16W
R615	NRSA63J-474X	M.G.RESISTOR	470k	1/16W
R616	NRVA63D-202X	C.M.F.RESISTOR	2k	1/16W
R617	NRSA63J-563X	M.G.RESISTOR	56k	1/16W
R618	NRSA63J-203X	M.G.RESISTOR	20k	1/16W
R619	NRSA63J-393X	M.G.RESISTOR	39k	1/16W
R625	NRSA63J-511X	M.G.RESISTOR	510	1/16W
R626	NRSA63J-511X	M.G.RESISTOR	510	1/16W
R627	NRSA63J-511X	M.G.RESISTOR	510	1/16W
R628	NRSA63J-511X	M.G.RESISTOR	510	1/16W
R629	NRSA63J-105X	M.G.RESISTOR	1M	1/16W
R630	NRSA63J-0R0X	M.G.RESISTOR	0	1/16W
R631	NRSA63J-0R0X	M.G.RESISTOR	0	1/16W
R634	NRSA63J-0R0X	M.G.RESISTOR	0	1/16W
R635	NRSA63J-103X	M.G.RESISTOR	10k	1/16W
R636	NRSA63J-473X	M.G.RESISTOR	47k	1/16W
R642	NRSA63J-0R0X	M.G.RESISTOR	0	1/16W
R643	NRSA63J-103X	M.G.RESISTOR	10k	1/16W
R646	NRSA63J-393X	M.G.RESISTOR	39k	1/16W
R649	NRSA63J-0R0X	M.G.RESISTOR	0	1/16W
R650	NRSA63J-0R0X	M.G.RESISTOR	0	1/16W
R652	NRSA63J-0R0X	M.G.RESISTOR	0	1/16W
R657	NRSA63J-152X	M.G.RESISTOR	1.5k	1/16W
R658	NRSA63J-472X	M.G.RESISTOR	4.7k	1/16W
R661	NRSA63J-0R0X	M.G.RESISTOR	0	1/16W
R662	NRSA63J-0R0X	M.G.RESISTOR	0	1/16W
R663	NRSA63J-152X	M.G.RESISTOR	1.5k	1/16W
R903	NRSA63J-0R0X	M.G.RESISTOR	0	1/16W
R904	NRSA63J-103X	M.G.RESISTOR	10k	1/16W
R905	NRSA63J-152X	M.G.RESISTOR	1.5k	1/16W
R906	NRSA63J-222X	M.G.RESISTOR	2.2k	1/16W
R907	NRSA63J-100X	M.G.RESISTOR	10	1/16W
R909	NRSA63J-0R0X	M.G.RESISTOR	0	1/16W
R911	NRSA63J-152X	M.G.RESISTOR	1.5k	1/16W
R912	NRSA63J-123X	M.G.RESISTOR	12k	1/16W
R913	NRSA63J-680X	M.G.RESISTOR	68	1/16W
R914	NRSA63J-471X	M.G.RESISTOR	470	1/16W
R915	NRSA63J-103X	M.G.RESISTOR	10k	1/16W
R916	NRSA63J-271X	M.G.RESISTOR	270	1/16W
R917	NRSA63J-102X	M.G.RESISTOR	1k	1/16W

Symbol No.	Part No.	Part Name	Description	
R921	NRSA63J-102X	M.G.RESISTOR	1k	1/16W
R922	NRSA63J-221X	M.G.RESISTOR	220	1/16W
R923	NRSA63J-221X	M.G.RESISTOR	220	1/16W
R924	NRSA63J-102X	M.G.RESISTOR	1k	1/16W
R925	NRSA63J-680X	M.G.RESISTOR	68	1/16W
R926	NRSA63J-123X	M.G.RESISTOR	12k	1/16W
R927	NRSA63J-152X	M.G.RESISTOR	1.5k	1/16W
R928	NRSA63J-0R0X	M.G.RESISTOR	0	1/16W
R932	NRSA63J-0R0X	M.G.RESISTOR	0	1/16W
C601	NCB31HK-103X	CER.CAPACITOR	0.01	50V
C602	NCB41CM-106X	CER.CAPACITOR	10	16V
C603	NBE21AM-106X	TAN.CAPACITOR	10	10V
C605	NCB31CK-104X	CER.CAPACITOR	0.1	16V
C606	NCB31HK-152X	CER.CAPACITOR	1500p	50V
C607	NCB31HK-103X	CER.CAPACITOR	0.01	50V
C608	NCB31HK-103X	CER.CAPACITOR	0.01	50V
C609	NCB31HK-103X	CER.CAPACITOR	0.01	50V
C610	NCB31HK-103X	CER.CAPACITOR	0.01	50V
C611	NCB31HK-103X	CER.CAPACITOR	0.01	50V
C612	NCB31HK-103X	CER.CAPACITOR	0.01	50V
C613	NCB31HK-103X	CER.CAPACITOR	0.01	50V
C614	NBE71VM-106X	TAN.CAPACITOR	10	35V
C615	NCB31CK-104X	CER.CAPACITOR	0.1	16V
C616	NCB31CK-104X	CER.CAPACITOR	0.1	16V
C617	NCB31CK-104X	CER.CAPACITOR	0.1	16V
C618	NCB31EK-223X	CER.CAPACITOR	0.022	25V
C619	NCB31EK-223X	CER.CAPACITOR	0.022	25V
C620	NCB31EK-223X	CER.CAPACITOR	0.022	25V
C621	NCB21AK-105X	CER.CAPACITOR	1	10V
C622	NCB31CK-104X	CER.CAPACITOR	0.1	16V
C623	NCB31CK-104X	CER.CAPACITOR	0.1	16V
C625	NCB31CK-104X	CER.CAPACITOR	0.1	16V
C626	NCB31EK-223X	CER.CAPACITOR	0.022	25V
C627	NCB31CK-473X	CER.CAPACITOR	0.047	16V
C628	NCB21EK-104X	CER.CAPACITOR	0.1	25V
C631	NCB31CK-104X	CER.CAPACITOR	0.1	16V
C632	NBE51CM-226X	TAN.CAPACITOR	22	16V
C635	NBE71VM-106X	TAN.CAPACITOR	10	35V
C636	NCB41CM-106X	CER.CAPACITOR	10	16V
C637	NCB41CM-106X	CER.CAPACITOR	10	16V
C639	NCB31HK-103X	CER.CAPACITOR	0.01	50V
C640	NCB31HK-103X	CER.CAPACITOR	0.01	50V
C641	NCB31HK-103X	CER.CAPACITOR	0.01	50V
C644	NCB21EK-104X	CER.CAPACITOR	0.1	25V
C646	NCB31CK-104X	CER.CAPACITOR	0.1	16V
C647	NCB31CK-104X	CER.CAPACITOR	0.1	16V
C648	NCB21CK-224X	CER.CAPACITOR	0.22	16V
C649	NCB21CK-224X	CER.CAPACITOR	0.22	16V
C650	NCB21CK-224X	CER.CAPACITOR	0.22	16V
C651	NCB31HK-103X	CER.CAPACITOR	0.01	50V
C652	NBE71VM-106X	TAN.CAPACITOR	10	35V
C653	NCF31CZ-334X	CER.CAPACITOR	0.33	16V
C654	NCF31CZ-334X	CER.CAPACITOR	0.33	16V
C901	NCB31HK-122X	CER.CAPACITOR	1200p	50V
C902	NCB21AK-105X	CER.CAPACITOR	1	10V
C903	NCB31HK-102X	CER.CAPACITOR	1000p	50V
C904	NCB31HK-103X	CER.CAPACITOR	0.01	50V
C905	NCB31HK-103X	CER.CAPACITOR	0.01	50V
C906	NDC31HJ-470X	CER.CAPACITOR	47p	50V
C907	NCB31HK-681X	CER.CAPACITOR	680p	50V
C909	NCB31HK-152X	CER.CAPACITOR	1500p	50V
C910	NDC31HJ-330X	CER.CAPACITOR	33p	50V
C911	NBE20JM-106X	TAN.CAPACITOR	10	6.3V
C912	NCB31HK-103X	CER.CAPACITOR	0.01	50V
C913	NBE61AM-107X	TAN.CAPACITOR	100	10V
C914	NCB31HK-103X	CER.CAPACITOR	0.01	50V
C915	NCB31HK-103X	CER.CAPACITOR	0.01	50V
C916	NDC31HJ-220X	CER.CAPACITOR	22p	50V
C917	NBE71VM-106X	TAN.CAPACITOR	10	35V
C918	NCB31HK-103X	CER.CAPACITOR	0.01	50V
C919	NCB31HK-103X	CER.CAPACITOR	0.01	50V

[PR & MDA]

Symbol No.	Part No.	Part Name	Description
C920	NCB31HK-103X	CER.CAPACITOR	0.01 50V
C921	NCB31HK-103X	CER.CAPACITOR	0.01 50V
C922	NCB31HK-103X	CER.CAPACITOR	0.01 50V
C924	NCB31HK-103X	CER.CAPACITOR	0.01 50V
C927	NCB31HK-103X	CER.CAPACITOR	0.01 50V
C929	NRSA63J-0R0X	M.G.RESISTOR	0p
C930	NBE50JM-107X	TAN.CAPACITOR	100 6.3V
C931	NBE21AM-106X	TAN.CAPACITOR	10 10V
C932	NBE21AM-106X	TAN.CAPACITOR	10 10V
C933	NCB31HK-103X	CER.CAPACITOR	0.01 50V
C934	NDC31HJ-330X	CER.CAPACITOR	33p 50V
C935	NBE20JM-106X	TAN.CAPACITOR	10 6.3V
C936	NCB31HK-103X	CER.CAPACITOR	0.01 50V
C938	NCB31HK-152X	CER.CAPACITOR	1500p 50V
C940	NCB31HK-103X	CER.CAPACITOR	0.01 50V
C943	NCB31HK-103X	CER.CAPACITOR	0.01 50V
L901	NQL044K-470X	COIL	47uH
L902	NQL044K-221X	COIL	220uH
L903	NQL044K-470X	COIL	47uH
L904	NQL085J-220X	COIL	22uH
L905	NQL085J-220X	COIL	22uH
LC601	PGZ01972Z	LC FILTER	
LC602	PGZ01972Z	LC FILTER	
LC603	PGZ01972Z	LC FILTER	
LC605	PGZ01972Z	LC FILTER	
CN601	QGA1201F2-09X	CONNECTOR	9PIN
CN602	QGA1201C2-02X	CONNECTOR	2PIN
CN603	QGF0508F1-11X	CONNECTOR	11PIN
CN604	QGF0504C1-18X	CONNECTOR	18PIN
CN605	QGA1201F2-04X	CONNECTOR	4PIN
CN606	QGF0508F1-20X	CONNECTOR	20PIN
CN607	QGA1201C2-04X	CONNECTOR	4PIN
CN608	QGF0508F1-10X	CONNECTOR	10PIN
CN609	QGA1201F2-02X	CONNECTOR	2PIN
CN610	QGA2001F2-02X	CONNECTOR	2PIN
CN901	QGF0508F1-20X	CONNECTOR	20PIN
CN902	QGF0504C1-10X	CONNECTOR	10PIN
TP601	NNZ0009-001X	TEST POINT	TP601-904

6.2 DCDC BOARD ASSEMBLY PARTS LIST 02

SLK2088-02-01A 02

Symbol No.	Part No.	Part Name	Description
IC1	BA9738KV	I.C.(M)	ROHM
Q2	DTC144EUA-X	TRANSISTOR	ROHM
Q3	2SB1302/ST/-X	TRANSISTOR	SANYO
Q4	2SB1302/ST/-X	TRANSISTOR	SANYO
Q5	2SB1302/ST/-X	TRANSISTOR	SANYO
Q6	2SB1302/ST/-X	TRANSISTOR	SANYO
Q7	2SB1302/ST/-X	TRANSISTOR	SANYO
Q8	2SB1302/ST/-X	TRANSISTOR	SANYO
D1	SFPB-72-W	SB DIODE	SANKEN
D2	SFPB-72-W	SB DIODE	SANKEN
D3	SFPB-72-W	SB DIODE	SANKEN
D4	SFPB-72-W	SB DIODE	SANKEN
D5	SFPB-72-W	SB DIODE	SANKEN
D6	SFPB-72-W	SB DIODE	SANKEN
D7	DAN202U-X	DIODE	ROHM
R1	NRSA63J-103X	M.G.RESISTOR	10k 1/16W
R2	NRSA63J-103X	M.G.RESISTOR	10k 1/16W
R3	NRSA63J-0R0X	M.G.RESISTOR	0 1/16W
R5	NRSA63J-272X	M.G.RESISTOR	2.7k 1/16W
R6	NRSA63J-223X	M.G.RESISTOR	22k 1/16W
R7	NRSA63J-682X	M.G.RESISTOR	6.8k 1/16W
R8	NRSA63J-823X	M.G.RESISTOR	82k 1/16W
R9	NRSA63J-223X	M.G.RESISTOR	22k 1/16W
R10	NRSA63J-102X	M.G.RESISTOR	1k 1/16W
R11	NRSA63J-122X	M.G.RESISTOR	1.2k 1/16W
R14	NRSA63J-122X	M.G.RESISTOR	1.2k 1/16W
R15	NRSA63J-223X	M.G.RESISTOR	22k 1/16W
R16	NRSA63J-682X	M.G.RESISTOR	6.8k 1/16W
R17	NRSA63J-823X	M.G.RESISTOR	82k 1/16W
R18	NRSA63J-123X	M.G.RESISTOR	12k 1/16W
R19	NRSA63J-223X	M.G.RESISTOR	22k 1/16W
R20	NRSA63J-272X	M.G.RESISTOR	2.7k 1/16W
R21	NRSA63D-243X	M.G.RESISTOR	24k 1/16W
R22	NRSA63D-103X	M.G.RESISTOR	10k 1/16W
R23	NRSA63D-153X	M.G.RESISTOR	15k 1/16W
R24	NRSA63D-123X	M.G.RESISTOR	12k 1/16W
R25	NRSA63J-223X	M.G.RESISTOR	22k 1/16W
R26	NRSA63J-0R0X	M.G.RESISTOR	0 1/16W
R27	NRSA63J-473X	M.G.RESISTOR	47k 1/16W
R28	NRSA63D-153X	M.G.RESISTOR	15k 1/16W
R29	NRSA63D-103X	M.G.RESISTOR	10k 1/16W
R30	NRSA63D-273X	M.G.RESISTOR	27k 1/16W
R31	NRSA63D-822X	M.G.RESISTOR	8.2k 1/16W
R32	NRSA63D-103X	M.G.RESISTOR	10k 1/16W
R33	NRSA63D-273X	M.G.RESISTOR	27k 1/16W
R34	NRSA63D-153X	M.G.RESISTOR	15k 1/16W
R35	NRSA63D-103X	M.G.RESISTOR	10k 1/16W
R36	NRSA63D-682X	M.G.RESISTOR	6.8k 1/16W
R37	NRSA63J-472X	M.G.RESISTOR	4.7k 1/16W
R38	NRSA63J-472X	M.G.RESISTOR	4.7k 1/16W
R39	NRSA63J-103X	M.G.RESISTOR	10k 1/16W
R40	NRSA63J-472X	M.G.RESISTOR	4.7k 1/16W
R41	NRSA63J-103X	M.G.RESISTOR	10k 1/16W
R42	NRSA63D-183X	M.G.RESISTOR	18k 1/16W
R43	NRSA63J-102X	M.G.RESISTOR	1k 1/16W
R44	NRSA63J-102X	M.G.RESISTOR	1k 1/16W
R45	NRSA63J-0R0X	M.G.RESISTOR	0 1/16W
R46	NRSA63J-0R0X	M.G.RESISTOR	0 1/16W
R47	NRSA63J-331X	M.G.RESISTOR	330 1/16W
R49	NRSA63J-103X	M.G.RESISTOR	10k 1/16W
R50	NRSA63J-0R0X	M.G.RESISTOR	0 1/16W
R51	NRSA63J-0R0X	M.G.RESISTOR	0 1/16W
R52	NRSA63J-103X	M.G.RESISTOR	10k 1/16W
R53	NRSA63J-103X	M.G.RESISTOR	10k 1/16W
R54	NRSA63J-0R0X	M.G.RESISTOR	0 1/16W
R55	NRSA63J-0R0X	M.G.RESISTOR	0 1/16W
R56	NRSA63J-0R0X	M.G.RESISTOR	0 1/16W
R58	NRSA63J-0R0X	M.G.RESISTOR	0 1/16W

Symbol No.	Part No.	Part Name	Description
C1	NCB21AK-105X	CER.CAPACITOR	1 10V
C2	NCB21AK-105X	CER.CAPACITOR	1 10V
C3	NCB21AK-105X	CER.CAPACITOR	1 10V
C4	NCB31HK-102X	CER.CAPACITOR	1000p 50V
C5	NCB31HK-102X	CER.CAPACITOR	1000p 50V
C6	NCB31HK-102X	CER.CAPACITOR	1000p 50V
C7	NCB31HK-102X	CER.CAPACITOR	1000p 50V
C8	NCB21CK-224X	CER.CAPACITOR	0.22 16V
C9	NCB31CK-104X	CER.CAPACITOR	0.1 16V
C10	NCB11AK-225X	CER.CAPACITOR	2.2 10V
C11	NCB31CK-104X	CER.CAPACITOR	0.1 16V
C12	NCB31CK-104X	CER.CAPACITOR	0.1 16V
C13	NCB31HK-331X	CER.CAPACITOR	330p 50V
C14	NDC31HJ-181X	CER.CAPACITOR	180p 50V
C15	NCB31CK-104X	CER.CAPACITOR	0.1 16V
C16	NCB31CK-473X	CER.CAPACITOR	0.047 16V
C17	NCB31CK-104X	CER.CAPACITOR	0.1 16V
C18	NCB31HK-472X	CER.CAPACITOR	4700p 50V
C19	NCB31HK-103X	CER.CAPACITOR	0.01 50V
C20	NCB31HK-103X	CER.CAPACITOR	0.01 50V
C21	NCB31HK-102X	CER.CAPACITOR	1000p 50V
C22	NDC31HJ-101X	CER.CAPACITOR	100p 50V
C23	NCB31HK-102X	CER.CAPACITOR	1000p 50V
C24	NCB31HK-102X	CER.CAPACITOR	1000p 50V
C25	NCB31HK-102X	CER.CAPACITOR	1000p 50V
C26	NCB31HK-102X	CER.CAPACITOR	1000p 50V
C27	NCB31HK-102X	CER.CAPACITOR	1000p 50V
C28	NCB31HK-102X	CER.CAPACITOR	1000p 50V
C30	NCB21AK-105X	CER.CAPACITOR	1 10V
C31	NCB21AK-105X	CER.CAPACITOR	1 10V
C32	NCB11AK-475X	CER.CAPACITOR	4.7 10V
C33	NCB21AK-105X	CER.CAPACITOR	1 10V
C34	NCB11AK-475X	CER.CAPACITOR	4.7 10V
C35	NCB21AK-105X	CER.CAPACITOR	1 10V
C36	NCB10JK-106X	CER.CAPACITOR	10 6.3V
C37	NCB10JK-106X	CER.CAPACITOR	10 6.3V
C38	NCB21AK-105X	CER.CAPACITOR	1 10V
C39	NCB10JK-106X	CER.CAPACITOR	10 6.3V
C40	NCB10JK-106X	CER.CAPACITOR	10 6.3V
C41	NCB10JK-106X	CER.CAPACITOR	10 6.3V
C42	NCB21AK-105X	CER.CAPACITOR	1 10V
C43	NCB10JK-106X	CER.CAPACITOR	10 6.3V
C44	NCB10JK-106X	CER.CAPACITOR	10 6.3V
C45	NCB21AK-105X	CER.CAPACITOR	1 10V
C46	NCB10JK-106X	CER.CAPACITOR	10 6.3V
C47	NCB10JK-106X	CER.CAPACITOR	10 6.3V
C48	NCB10JK-106X	CER.CAPACITOR	10 6.3V
C49	NCB41CM-106X	CER.CAPACITOR	10 16V
C50	NCB41CM-106X	CER.CAPACITOR	10 16V
L1	NQL23CM-330X	COIL	33uH
L2	NQL23CM-330X	COIL	33uH
L3	NQL23CM-330X	COIL	33uH
L4	NQL24CN-220X	COIL	22uH
L5	NQL25CM-330X	COIL	33uH
L6	NQL25CM-330X	COIL	33uH
L7	NQL23CM-330X	COIL	33uH
L8	NQL24CN-220X	COIL	22uH
L9	NQL35BK-100X	COIL	10uH
L10	NQL35BK-100X	COIL	10uH
L11	NQL24CN-220X	COIL	22uH
L12	NQL23CM-330X	COIL	33uH
L13	NQL24CN-220X	COIL	22uH
L14	NQL35BK-100X	COIL	10uH
L15	NQL35BK-100X	COIL	10uH
CN1	QGA1201F2-13X	CONNECTOR	13PIN
CN2	QGA1201F2-09X	CONNECTOR	9PIN
⚠CP11	ICP-S2.3TN	ICP	
⚠CP12	ICP-S2.3TN	ICP	
⚠CP13	ICP-S2.3TN	ICP	

6.3 ROM BOARD ASSEMBLY PARTS LIST 03

SLK2088-03-A5A (U)

SLK2088-03-E5A (E)

03

Symbol No.	Part No.	Part Name	Description
IC1	M29W102BB70N112	I.C.	NOT INCLUDED (U)
	M29W102BB70N192	I.C.	NOT INCLUDED (E)
SK1	NNV0012-040	IC SOCKET	FOR IC1
IC2	74LCX16244MTD-X	I.C.(M)	NATIONAL SEMICO
IC3	74LCX16374MTD-X	I.C.(M)	NATIONAL SEMICO
IC4	TC7W00FU-X	I.C.(M)	TOSHIBA
IC5	TC7W04FU-X	I.C.(M)	TOSHIBA
R3	NRSA63J-0R0X	M.G.RESISTOR	0 1/16W
R4	NRSA63J-0R0X	M.G.RESISTOR	0 1/16W
R5	NRSA63J-473X	M.G.RESISTOR	47k 1/16W
R6	NRSA63J-473X	M.G.RESISTOR	47k 1/16W
RA1	NRZ0015-473X	RESISTOR ARRAY	47k
RA2	NRZ0015-473X	RESISTOR ARRAY	47k
RA3	NRZ0015-473X	RESISTOR ARRAY	47k
RA4	NRZ0015-473X	RESISTOR ARRAY	47k
C1	NCF31CZ-104X	CER.CAPACITOR	0.1 16V
C2	NCF31CZ-104X	CER.CAPACITOR	0.1 16V
C3	NCF31CZ-104X	CER.CAPACITOR	0.1 16V
C4	NCF31CZ-104X	CER.CAPACITOR	0.1 16V
C5	NCF31CZ-104X	CER.CAPACITOR	0.1 16V
CN1	QGB0801M2-26X	CONNECTOR	26PIN
LA1	NRZ0038-0R0X	RESISTOR ARRAY	
LA2	NRZ0038-0R0X	RESISTOR ARRAY	
LA3	NRZ0038-0R0X	RESISTOR ARRAY	
LA4	NRZ0038-0R0X	RESISTOR ARRAY	

6.4 CONN. BOARD ASSEMBLY PARTS LIST 04

SLK2088-04-00A

04

Symbol No.	Part No.	Part Name	Description
R1	NRSA63J-103X	M.G.RESISTOR	10k 1/16W
TH1	NAD0002-103X	THERMISTOR	10k
CN1	QGF0508F2-15X	CONNECTOR	15PIN
CN2	QGF0508F2-18X	CONNECTOR	18PIN

6.5 DV MAIN BOARD ASSEMBLY PARTS LIST [1][0]

SLK2087-U3A(U)

SLK2087-E3A(E) [1][0]□□□□□□

Symbol No.	Part No.	Part Name	Description
IC101	MN1021617HF	I.C.(M)	MATSUSHITA (U)
	MN1021617HE	I.C.(M)	MATSUSHITA (E)
IC101	MN102F1617HL-2B	I.C.(M)	OR PARTS (U)
	MN102F1617HL-0B	I.C.(M)	OR PARTS (E)
IC103	X25057M8-2.7-X	I.C.(M)	XICOR
IC105	S-80823ANNP-W	I.C.(M)	SEIKO
IC107	SN74CBT3384APWX		I.C.(M) TEXAS
IC108	S-81240PG-PJ-X	I.C.(M)	SEIKO
IC113	TC7W04FU-X	I.C.(M)	TOSHIBA
IC201	AK4518-VF-X	I.C.(M)	ASAHI KASEI
IC202	M5218AFP-X	I.C.(M)	MITSUBISHI
IC301	MN67373	I.C.(M)	MATSUSHITA
IC302	MN47V06AF	I.C.(M)	MATSUSHITA (U)
	MN47V07AF	I.C.(M)	MATSUSHITA (E)
IC303	M65500FP	I.C.(M)	MITSUBISHI
IC304	MN41V4260TT-A07	I.C.(M)	MATSUSHITA
IC305	AD9057BRS-60-X	I.C.(M)	FUJI ELECTRO
IC306	PLL1700E-X	I.C.(M)	BURR BROWN
IC307	UPC2384GA	I.C.(M)	NEC
IC401	M31020MA-166VP	I.C.(M)	MITSUBISHI (U)
	M31020MA-167VP	I.C.(M)	MITSUBISHI (E)
IC401	M31020EAVP-012	I.C.(M)	OR PARTS (U)
	M31020EAVP-112	I.C.(M)	OR PARTS (E)
IC402	TC7W14FU-X	I.C.(M)	TOSHIBA
IC403	TC7W04FU-X	I.C.(M)	TOSHIBA
IC404	NM24C16LEM8-X	I.C.(M)	MATSUSHITA
IC501	AN3741FAP-A	I.C.(M)	MATSUSHITA
IC503	MB88345PF	I.C.(M)	FUJITSU
IC601	BH7086KV	I.C.(M)	ROHM
IC602	T9P90EF	I.C.(M)	TOSHIBA
IC603	M52387FP	I.C.(M)	MITSUBISHI
IC604	M52684AFP-XE	I.C.(M)	MITSUBISHI
IC605	TC7SH08F-X	I.C.(M)	TOSHIBA
IC606	TC7SH00F-X	I.C.(M)	TOSHIBA
IC610	TC7SET04FU-X	I.C.(M)	TOSHIBA
IC611	TC7SHU04FU-X	I.C.(M)	TOSHIBA
IC612	TC7SHU04FU-X	I.C.(M)	TOSHIBA
IC613	TC7SHU04FU-X	I.C.(M)	TOSHIBA
IC614	TC7SHU04FU-X	I.C.(M)	TOSHIBA
IC615	AN77L03M-X	I.C.(M)	MATSUSHITA
IC801	TSB13LV11PBW	I.C.(M)	TEXAS
Q101	2SC4617/RS/-X	TRANSISTOR	ROHM
Q202	2SC4617/RS/-X	TRANSISTOR	ROHM
Q401	DTA114EUA-X	TRANSISTOR	ROHM
Q402	UMG3N-W	TRANSISTOR	ROHM
Q403	UMC3N-W	TRANSISTOR	ROHM
Q404	UMC3N-W	TRANSISTOR	ROHM
Q501	2SC4226/3-5/-X	TRANSISTOR	NEC
Q502	DTC124EUA-X	TRANSISTOR	ROHM
Q503	2SC4617/RS/-X	TRANSISTOR	ROHM
Q505	DTC144EUA-X	TRANSISTOR	ROHM
Q506	DTC144EUA-X	TRANSISTOR	ROHM
Q507	DTC144EUA-X	TRANSISTOR	ROHM
Q511	2SA1774/QRS/-X	TRANSISTOR	ROHM
Q512	DTC144EUA-X	TRANSISTOR	ROHM
Q513	UMZ1N-W	TRANSISTOR	ROHM
Q601	2SC4081/QRS/-X	TRANSISTOR	ROHM
Q602	2SC4081/QRS/-X	TRANSISTOR	ROHM
Q603	2SC4081/QRS/-X	TRANSISTOR	ROHM
Q605	2SC4081/QRS/-X	TRANSISTOR	ROHM
Q608	2SC4081/QRS/-X	TRANSISTOR	ROHM
Q609	2SC4081/QRS/-X	TRANSISTOR	ROHM
Q610	2SB1218A/RS/-X	TRANSISTOR	MATSUSHITA
Q611	2SB1218A/RS/-X	TRANSISTOR	MATSUSHITA
Q612	DTC144WUA-X	TRANSISTOR	ROHM
Q613	DTC144WUA-X	TRANSISTOR	ROHM
Q614	DTC144EUA-X	TRANSISTOR	ROHM
D102	DAN202U-X	DIODE	ROHM
D103	DAN202U-X	DIODE	ROHM
D401	DAP202U-X	DIODE	ROHM
D402	DAP202U-X	DIODE	ROHM

Symbol No.	Part No.	Part Name	Description
D601	1SS355-X	DIODE	ROHM
R101	NRSA63J-0R0X	M.G.RESISTOR	0 1/16W
R103	NRSA63J-104X	M.G.RESISTOR	100k 1/16W
R104	NRSA63J-102X	M.G.RESISTOR	1k 1/16W
R105	NRSA63J-102X	M.G.RESISTOR	1k 1/16W
R106	NRSA63J-102X	M.G.RESISTOR	1k 1/16W
R107	NRSA63J-102X	M.G.RESISTOR	1k 1/16W
R108	NRSA63J-102X	M.G.RESISTOR	1k 1/16W
R109	NRSA63J-102X	M.G.RESISTOR	1k 1/16W
R110	NRSA63J-102X	M.G.RESISTOR	1k 1/16W
R111	NRSA63J-102X	M.G.RESISTOR	1k 1/16W
R112	NRSA63J-102X	M.G.RESISTOR	1k 1/16W
R113	NRSA63J-102X	M.G.RESISTOR	1k 1/16W
R114	NRSA63J-102X	M.G.RESISTOR	1k 1/16W
R115	NRSA63J-102X	M.G.RESISTOR	1k 1/16W
R116	NRSA63J-102X	M.G.RESISTOR	1k 1/16W
R117	NRSA63J-102X	M.G.RESISTOR	1k 1/16W
R118	NRSA63J-102X	M.G.RESISTOR	1k 1/16W
R137	NRSA63J-103X	M.G.RESISTOR	10k 1/16W
R138	NRSA63J-103X	M.G.RESISTOR	10k 1/16W
R139	NRSA63J-102X	M.G.RESISTOR	1k 1/16W
R142	NRSA63J-103X	M.G.RESISTOR	10k 1/16W
R143	NRSA63J-472X	M.G.RESISTOR	4.7k 1/16W
R144	NRSA63J-472X	M.G.RESISTOR	4.7k 1/16W
R150	NRSA63J-0R0X	M.G.RESISTOR	0 1/16W
R152	NRSA63J-103X	M.G.RESISTOR	10k 1/16W
R157	NRSA63J-102X	M.G.RESISTOR	1k 1/16W
R162	NRSA63J-0R0X	M.G.RESISTOR	0 1/16W
R163	NRSA63J-103X	M.G.RESISTOR	10k 1/16W
R164	NRSA63J-0R0X	M.G.RESISTOR	0 1/16W
R169	NRSA63J-0R0X	M.G.RESISTOR	0 1/16W
R170	NRSA63J-104X	M.G.RESISTOR	100k 1/16W
R171	NRSA63J-104X	M.G.RESISTOR	100k 1/16W
R172	NRSA63J-104X	M.G.RESISTOR	100k 1/16W
R173	NRSA63J-0R0X	M.G.RESISTOR	0 1/16W
R174	NRSA63J-0R0X	M.G.RESISTOR	0 1/16W
R175	NRSA63J-473X	M.G.RESISTOR	47k 1/16W
R176	NRSA63J-0R0X	M.G.RESISTOR	0 1/16W
R177	NRSA63J-0R0X	M.G.RESISTOR	0 1/16W
R178	NRSA63J-0R0X	M.G.RESISTOR	0 1/16W
R179	NRSA63J-473X	M.G.RESISTOR	47k 1/16W
R180	NRSA63J-332X	M.G.RESISTOR	3.3k 1/16W
R181	NRSA63J-332X	M.G.RESISTOR	3.3k 1/16W
R182	NRSA63J-332X	M.G.RESISTOR	3.3k 1/16W
R183	NRSA63J-332X	M.G.RESISTOR	3.3k 1/16W
R184	NRSA63J-332X	M.G.RESISTOR	3.3k 1/16W
R185	NRSA63J-101X	M.G.RESISTOR	100 1/16W
R186	NRSA63J-101X	M.G.RESISTOR	100 1/16W
R187	NRSA63J-101X	M.G.RESISTOR	100 1/16W
R188	NRSA63J-101X	M.G.RESISTOR	100 1/16W
R189	NRSA63J-472X	M.G.RESISTOR	4.7k 1/16W
R198	NRSA63J-0R0X	M.G.RESISTOR	0 1/16W
R199	NRSA63J-0R0X	M.G.RESISTOR	0 1/16W
R202	NRSA63J-100X	M.G.RESISTOR	10 1/16W
R207	NRSA63J-0R0X	M.G.RESISTOR	0 1/16W
R208	NRSA63J-471X	M.G.RESISTOR	470 1/16W
R209	NRSA63J-471X	M.G.RESISTOR	470 1/16W
R210	NRSA63J-682X	M.G.RESISTOR	6.8k 1/16W
R211	NRSA63J-123X	M.G.RESISTOR	12k 1/16W
R212	NRSA63J-912X	M.G.RESISTOR	9.1k 1/16W
R214	NRSA63J-103X	M.G.RESISTOR	10k 1/16W
R215	NRSA63J-472X	M.G.RESISTOR	4.7k 1/16W
R216	NRSA63J-221X	M.G.RESISTOR	220 1/16W
R217	NRSA63J-912X	M.G.RESISTOR	9.1k 1/16W
R218	NRSA63J-103X	M.G.RESISTOR	10k 1/16W
R219	NRSA63J-103X	M.G.RESISTOR	10k 1/16W
R221	NRSA63J-221X	M.G.RESISTOR	220 1/16W
R223	NRSA63J-103X	M.G.RESISTOR	10k 1/16W
R301	NRSA63J-271X	M.G.RESISTOR	270 1/16W
R302	NRSA63J-105X	M.G.RESISTOR	1M 1/16W
R303	NRSA63J-0R0X	M.G.RESISTOR	0 1/16W

Symbol No.	Part No.	Part Name	Description	
R304	NRSA63J-102X	M.G.RESISTOR	1k	1/16W
R305	NRSA63J-105X	M.G.RESISTOR	1M	1/16W
R306	NRSA63J-0R0X	M.G.RESISTOR	0	1/16W
R307	NRSA63J-221X	M.G.RESISTOR	220	1/16W
R308	NRSA63J-471X	M.G.RESISTOR	470	1/16W
R309	NRSA63J-471X	M.G.RESISTOR	470	1/16W
R310	NRSA63J-221X	M.G.RESISTOR	220	1/16W
R311	NRSA63J-221X	M.G.RESISTOR	220	1/16W
R312	NRSA63J-0R0X	M.G.RESISTOR	0	1/16W
R313	NRSA63J-103X	M.G.RESISTOR	10k	1/16W
R314	NRSA63J-102X	M.G.RESISTOR	1k	1/16W
R315	NRSA63J-0R0X	M.G.RESISTOR	0	1/16W
R316	NRSA63J-102X	M.G.RESISTOR	1k	1/16W
R317	NRSA63J-682X	M.G.RESISTOR	6.8k	1/16W
R319	NRSA63J-224X	M.G.RESISTOR	220k	1/16W
R320	NRSA63J-0R0X	M.G.RESISTOR	0	1/16W
R321	NRSA63J-750X	M.G.RESISTOR	75	1/16W
R322	NRSA63J-124X	M.G.RESISTOR	120k	1/16W
R323	NRSA63J-0R0X	M.G.RESISTOR	0	1/16W
R331	NRSA63J-0R0X	M.G.RESISTOR	0	1/16W
R332	NRSA63J-0R0X	M.G.RESISTOR	0	1/16W
R333	NRSA63J-103X	M.G.RESISTOR	10k	1/16W
R334	NRSA63J-103X	M.G.RESISTOR	10k	1/16W
R335	NRSA63J-103X	M.G.RESISTOR	10k	1/16W
R336	NRSA63J-102X	M.G.RESISTOR	1k	1/16W
R337	NRSA63J-562X	M.G.RESISTOR	5.6k	1/16W
R338	NRSA63J-103X	M.G.RESISTOR	10k	1/16W
R339	NRSA63J-0R0X	M.G.RESISTOR	0	1/16W
R340	NRSA63J-103X	M.G.RESISTOR	10k	1/16W
R341	NRSA63J-103X	M.G.RESISTOR	10k	1/16W
R343	NRSA63J-0R0X	M.G.RESISTOR	0	1/16W
R344	NRSA63J-222X	M.G.RESISTOR	2.2k	1/16W
R345	NRSA63J-0R0X	M.G.RESISTOR	0	1/16W
R346	NRSA63J-333X	M.G.RESISTOR	33k	1/16W
R347	NRSA63J-0R0X	M.G.RESISTOR	0	1/16W
R348	NRSA63J-0R0X	M.G.RESISTOR	0	1/16W
R349	NRSA63J-101X	M.G.RESISTOR	100	1/16W
R350	NRSA63J-101X	M.G.RESISTOR	100	1/16W
R351	NRSA63J-103X	M.G.RESISTOR	10k	1/16W
R352	NRSA63J-103X	M.G.RESISTOR	10k	1/16W
R353	NRSA63J-103X	M.G.RESISTOR	10k	1/16W
R354	NRSA63J-102X	M.G.RESISTOR	1k	1/16W
R355	NRSA63J-0R0X	M.G.RESISTOR	0	1/16W
R356	NRSA63J-0R0X	M.G.RESISTOR	0	1/16W
R357	NRSA63J-221X	M.G.RESISTOR	220	1/16W
R402	NRSA63J-0R0X	M.G.RESISTOR	0	1/16W
R403	NRSA63J-105X	M.G.RESISTOR	1M	1/16W
R404	NRSA63J-220X	M.G.RESISTOR	22	1/16W
R405	NRSA63J-102X	M.G.RESISTOR	1k	1/16W
R406	NRSA63J-102X	M.G.RESISTOR	1k	1/16W
R407	NRSA63J-102X	M.G.RESISTOR	1k	1/16W
R408	NRSA63J-102X	M.G.RESISTOR	1k	1/16W
R409	NRSA63J-102X	M.G.RESISTOR	1k	1/16W
R410	NRSA63J-102X	M.G.RESISTOR	1k	1/16W
R411	NRSA63J-332X	M.G.RESISTOR	3.3k	1/16W
R412	NRSA63J-332X	M.G.RESISTOR	3.3k	1/16W
R413	NRSA63J-332X	M.G.RESISTOR	3.3k	1/16W
R414	NRSA63J-332X	M.G.RESISTOR	3.3k	1/16W
R415	NRSA63J-223X	M.G.RESISTOR	22k	1/16W
R416	NRSA63J-103X	M.G.RESISTOR	10k	1/16W
R417	NRSA63J-103X	M.G.RESISTOR	10k	1/16W
R418	NRSA63J-103X	M.G.RESISTOR	10k	1/16W
R419	NRSA63J-103X	M.G.RESISTOR	10k	1/16W
R420	NRSA63J-103X	M.G.RESISTOR	10k	1/16W
R421	NRSA63J-332X	M.G.RESISTOR	3.3k	1/16W
R422	NRSA63J-202X	M.G.RESISTOR	2k	1/16W
R423	NRSA63J-102X	M.G.RESISTOR	1k	1/16W
R424	NRSA63J-102X	M.G.RESISTOR	1k	1/16W
R425	NRSA63J-472X	M.G.RESISTOR	4.7k	1/16W
R426	NRSA63J-472X	M.G.RESISTOR	4.7k	1/16W
R427	NRSA63J-683X	M.G.RESISTOR	68k	1/16W
R428	NRSA63J-683X	M.G.RESISTOR	68k	1/16W
R429	NRSA63J-330X	M.G.RESISTOR	33	1/16W

Symbol No.	Part No.	Part Name	Description	
R430	NRSA63J-101X	M.G.RESISTOR	100	1/16W
R431	NRSA63J-332X	M.G.RESISTOR	3.3k	1/16W
R432	NRSA63J-332X	M.G.RESISTOR	3.3k	1/16W
R433	NRSA63J-332X	M.G.RESISTOR	3.3k	1/16W
R434	NRSA63J-561X	M.G.RESISTOR	560	1/16W
R435	NRSA63J-0R0X	M.G.RESISTOR	0	1/16W
R436	NRSA63J-0R0X	M.G.RESISTOR	0	1/16W
R437	NRSA63J-0R0X	M.G.RESISTOR	0	1/16W
R438	NRSA63J-561X	M.G.RESISTOR	560	1/16W
R439	NRSA63J-152X	M.G.RESISTOR	1.5k	1/16W
R440	NRSA63J-0R0X	M.G.RESISTOR	0	1/16W
R443	NRSA63J-104X	M.G.RESISTOR	100k	1/16W
R444	NRSA63J-103X	M.G.RESISTOR	10k	1/16W
R447	NRSA63J-103X	M.G.RESISTOR	10k	1/16W
R448	NRSA63J-103X	M.G.RESISTOR	10k	1/16W
R449	NRSA63J-103X	M.G.RESISTOR	10k	1/16W
R450	NRSA63J-0R0X	M.G.RESISTOR	0	1/16W
R451	NRSA63J-0R0X	M.G.RESISTOR	0	1/16W
R452	NRSA63J-0R0X	M.G.RESISTOR	0	1/16W
R454	NRSA63J-472X	M.G.RESISTOR	4.7k	1/16W
R502	NRSA63J-181X	M.G.RESISTOR	180	1/16W
R503	NRSA63J-301X	M.G.RESISTOR	300	1/16W
R504	NRSA63J-391X	M.G.RESISTOR	390	1/16W
R505	NRSA63J-152X	M.G.RESISTOR	1.5k	1/16W
R507	NRSA63J-222X	M.G.RESISTOR	2.2k	1/16W
R508	NRSA63J-392X	M.G.RESISTOR	3.9k	1/16W
R509	NRSA63J-392X	M.G.RESISTOR	3.9k	1/16W
R510	NRSA63J-221X	M.G.RESISTOR	220	1/16W
R512	NRSA63J-103X	M.G.RESISTOR	10k	1/16W
R513	NRSA63J-392X	M.G.RESISTOR	3.9k	1/16W
R514	NRSA63J-392X	M.G.RESISTOR	3.9k	1/16W
R515	NRSA63J-392X	M.G.RESISTOR	3.9k	1/16W
R516	NRSA63J-0R0X	M.G.RESISTOR	0	1/16W
R517	NRSA63J-683X	M.G.RESISTOR	68k	1/16W
R518	NRSA63J-331X	M.G.RESISTOR	330	1/16W
R519	NRSA63J-562X	M.G.RESISTOR	5.6k	1/16W
R520	NRSA63J-222X	M.G.RESISTOR	2.2k	1/16W
R521	NRSA63J-391X	M.G.RESISTOR	390	1/16W
R522	NRSA63J-121X	M.G.RESISTOR	120	1/16W
R523	NRSA63J-121X	M.G.RESISTOR	120	1/16W
R524	NRSA63J-121X	M.G.RESISTOR	120	1/16W
R525	NRSA63J-0R0X	M.G.RESISTOR	0	1/16W
R526	NRSA63J-822X	M.G.RESISTOR	8.2k	1/16W
R527	NRSA63J-222X	M.G.RESISTOR	2.2k	1/16W
R528	NRSA63J-221X	M.G.RESISTOR	220	1/16W
R529	NRSA63J-562X	M.G.RESISTOR	5.6k	1/16W
R530	NRSA63J-392X	M.G.RESISTOR	3.9k	1/16W
R533	NRSA63J-472X	M.G.RESISTOR	4.7k	1/16W
R535	NRSA63J-564X	M.G.RESISTOR	560k	1/16W
R536	NRSA63J-392X	M.G.RESISTOR	3.9k	1/16W
R537	NRSA63J-561X	M.G.RESISTOR	560	1/16W
R538	NRSA63J-224X	M.G.RESISTOR	220k	1/16W
R539	NRSA63J-680X	M.G.RESISTOR	68	1/16W
R540	NRSA63J-103X	M.G.RESISTOR	10k	1/16W
R541	NRSA63J-392X	M.G.RESISTOR	3.9k	1/16W
R555	NRSA63J-0R0X	M.G.RESISTOR	0	1/16W
R556	NRSA63J-0R0X	M.G.RESISTOR	0	1/16W
R565	NRSA63J-563X	M.G.RESISTOR	56k	1/16W
R566	NRSA63J-472X	M.G.RESISTOR	4.7k	1/16W
R567	NRSA63J-102X	M.G.RESISTOR	1k	1/16W
R568	NRSA63J-102X	M.G.RESISTOR	1k	1/16W
R569	NRSA63J-123X	M.G.RESISTOR	12k	1/16W
R601	NRSA63J-104X	M.G.RESISTOR	100k	1/16W
R602	NRSA63J-104X	M.G.RESISTOR	100k	1/16W
R603	NRSA63J-103X	M.G.RESISTOR	10k	1/16W
R604	NRSA63J-103X	M.G.RESISTOR	10k	1/16W
R605	NRSA63J-121X	M.G.RESISTOR	120	1/16W
R606	NRSA63J-682X	M.G.RESISTOR	6.8k	1/16W
R607	NRSA63J-332X	M.G.RESISTOR	3.3k	1/16W
R608	NRSA63J-101X	M.G.RESISTOR	100	1/16W
R609	NRSA63J-563X	M.G.RESISTOR	56k	1/16W
R610	NRSA63J-223X	M.G.RESISTOR	22k	1/16W
R611	NRSA63J-183X	M.G.RESISTOR	18k	1/16W

[DV MAIN]

Symbol No.	Part No.	Part Name	Description	
R612	NRSA63J-391X	M.G.RESISTOR	390	1/16W
R613	NRSA63J-223X	M.G.RESISTOR	22k	1/16W
R614	NRSA63J-223X	M.G.RESISTOR	22k	1/16W
R615	NRSA63J-152X	M.G.RESISTOR	1.5k	1/16W
R616	NRSA63J-101X	M.G.RESISTOR	100	1/16W
R617	NRSA63J-153X	M.G.RESISTOR	15k	1/16W
R618	NRSA63J-183X	M.G.RESISTOR	18k	1/16W
R619	NRSA63J-471X	M.G.RESISTOR	470	1/16W
R620	NRSA63J-123X	M.G.RESISTOR	12k	1/16W
R621	NRSA63J-471X	M.G.RESISTOR	470	1/16W
R622	NRSA63J-123X	M.G.RESISTOR	12k	1/16W
R623	NRSA63J-105X	M.G.RESISTOR	1M	1/16W
R624	NRSA63J-105X	M.G.RESISTOR	1M	1/16W
R625	NRSA63J-392X	M.G.RESISTOR	3.9k	1/16W
R626	NRSA63J-392X	M.G.RESISTOR	3.9k	1/16W
R629	NRSA63J-102X	M.G.RESISTOR	1k	1/16W
R631	NRSA63J-0R0X	M.G.RESISTOR	0	1/16W
R632	NRSA63J-0R0X	M.G.RESISTOR	0	1/16W
R633	NRSA63J-123X	M.G.RESISTOR	12k	1/16W
R634	NRSA63J-123X	M.G.RESISTOR	12k	1/16W
R635	NRSA63J-183X	M.G.RESISTOR	18k	1/16W
R636	NRSA63J-183X	M.G.RESISTOR	18k	1/16W
R637	NRSA63J-103X	M.G.RESISTOR	10k	1/16W
R638	NRSA63J-823X	M.G.RESISTOR	82k	1/16W
R645	NRSA63J-0R0X	M.G.RESISTOR	0	1/16W
R647	NRSA63J-102X	M.G.RESISTOR	1k	1/16W
R648	NRSA63J-0R0X	M.G.RESISTOR	0	1/16W
R649	NRSA63J-0R0X	M.G.RESISTOR	0	1/16W
R651	NRSA63J-0R0X	M.G.RESISTOR	0	1/16W
R652	NRSA63J-0R0X	M.G.RESISTOR	0	1/16W
R653	NRSA63J-0R0X	M.G.RESISTOR	0	1/16W
R654	NRSA63J-0R0X	M.G.RESISTOR	0	1/16W
R655	NRSA63J-0R0X	M.G.RESISTOR	0	1/16W
R656	NRSA63J-562X	M.G.RESISTOR	5.6k	1/16W
R657	NRSA63J-472X	M.G.RESISTOR	4.7k	1/16W
R658	NRSA63J-103X	M.G.RESISTOR	10k	1/16W
R659	NRSA63J-103X	M.G.RESISTOR	10k	1/16W
R660	NRSA63J-223X	M.G.RESISTOR	22k	1/16W
R661	NRSA63J-223X	M.G.RESISTOR	22k	1/16W
R662	NRSA63J-273X	M.G.RESISTOR	27k	1/16W
R663	NRSA63J-223X	M.G.RESISTOR	22k	1/16W
R664	NRSA63J-182X	M.G.RESISTOR	1.8k	1/16W
R665	NRSA63J-154X	M.G.RESISTOR	150k	1/16W
R666	NRSA63J-471X	M.G.RESISTOR	470	1/16W
R667	NRSA63J-103X	M.G.RESISTOR	10k	1/16W
R668	NRSA63J-271X	M.G.RESISTOR	270	1/16W
R669	NRSA63J-332X	M.G.RESISTOR	3.3k	1/16W
R670	NRSA63J-0R0X	M.G.RESISTOR	0	1/16W
R671	NRSA63J-473X	M.G.RESISTOR	47k	1/16W
R672	NRSA63J-273X	M.G.RESISTOR	27k	1/16W
R675	NRSA63J-0R0X	M.G.RESISTOR	0	1/16W
R678	NRSA63J-0R0X	M.G.RESISTOR	0	1/16W
R679	NRSA63J-103X	M.G.RESISTOR	10k	1/16W
R680	NRSA63J-0R0X	M.G.RESISTOR	0	1/16W
R681	NRSA63J-0R0X	M.G.RESISTOR	0	1/16W
R682	NRSA63J-103X	M.G.RESISTOR	10k	1/16W
R683	NRSA63J-103X	M.G.RESISTOR	10k	1/16W
R684	NRSA63J-0R0X	M.G.RESISTOR	0	1/16W
R685	NRSA63J-472X	M.G.RESISTOR	4.7k	1/16W
R686	NRSA63J-103X	M.G.RESISTOR	10k	1/16W
R687	NRSA63J-103X	M.G.RESISTOR	10k	1/16W
R688	NRSA63J-104X	M.G.RESISTOR	100k	1/16W
R690	NRSA63J-564X	M.G.RESISTOR	560k	1/16W
R691	NRSA63J-471X	M.G.RESISTOR	470	1/16W
R692	NRSA63J-105X	M.G.RESISTOR	1M	1/16W
R693	NRSA63J-333X	M.G.RESISTOR	33k	1/16W
R694	NRSA63J-0R0X	M.G.RESISTOR	0	1/16W
R695	NRSA63J-333X	M.G.RESISTOR	33k	1/16W
R696	NRSA63J-471X	M.G.RESISTOR	470	1/16W
R697	NRSA63J-471X	M.G.RESISTOR	470	1/16W
R700	NRSA63J-0R0X	M.G.RESISTOR	0	1/16W
R701	NRSA63J-392X	M.G.RESISTOR	3.9k	1/16W
R702	NRSA63J-0R0X	M.G.RESISTOR	0	1/16W

Symbol No.	Part No.	Part Name	Description	
R703	NRSA63J-0R0X	M.G.RESISTOR	0	1/16W
R704	NRSA63J-0R0X	M.G.RESISTOR	0	1/16W
R705	NRSA63J-0R0X	M.G.RESISTOR	0	1/16W
R706	NRSA63J-0R0X	M.G.RESISTOR	0	1/16W
R709	NRSA63J-0R0X	M.G.RESISTOR	0	1/16W
R710	NRSA63J-0R0X	M.G.RESISTOR	0	1/16W
R717	NRSA63J-0R0X	M.G.RESISTOR	0	1/16W
R718	NRSA63J-0R0X	M.G.RESISTOR	0	1/16W
R719	NRSA63J-0R0X	M.G.RESISTOR	0	1/16W
R721	NRSA63J-102X	M.G.RESISTOR	1k	1/16W
R722	NRSA63J-105X	M.G.RESISTOR	1M	1/16W
R723	NRSA63J-102X	M.G.RESISTOR	1k	1/16W
R724	NRSA63J-102X	M.G.RESISTOR	1k	1/16W
R725	NRSA63J-102X	M.G.RESISTOR	1k	1/16W
R726	NRSA63J-101X	M.G.RESISTOR	100	1/16W
R727	NRSA63J-105X	M.G.RESISTOR	1M	1/16W
R728	NRSA63J-102X	M.G.RESISTOR	1k	1/16W
R729	NRSA63J-102X	M.G.RESISTOR	1k	1/16W
R730	NRSA63J-222X	M.G.RESISTOR	2.2k	1/16W
R731	NRSA63J-222X	M.G.RESISTOR	2.2k	1/16W
R732	NRSA63J-0R0X	M.G.RESISTOR	0	1/16W
R733	NRSA63J-0R0X	M.G.RESISTOR	0	1/16W
R734	NRSA63J-222X	M.G.RESISTOR	2.2k	1/16W
R736	NRSA63J-222X	M.G.RESISTOR	2.2k	1/16W
R738	NRSA63J-0R0X	M.G.RESISTOR	0	1/16W
R739	NRSA63J-0R0X	M.G.RESISTOR	0	1/16W
R740	NRSA63J-102X	M.G.RESISTOR	1k	1/16W
R741	NRSA63J-102X	M.G.RESISTOR	1k	1/16W
R742	NRSA63J-102X	M.G.RESISTOR	1k	1/16W
R801	NRSA63J-103X	M.G.RESISTOR	10k	1/16W
R802	NRSA63J-103X	M.G.RESISTOR	10k	1/16W
R803	NRSA63J-103X	M.G.RESISTOR	10k	1/16W
R804	NRSA63J-103X	M.G.RESISTOR	10k	1/16W
R805	NRSA63J-103X	M.G.RESISTOR	10k	1/16W
R806	NRSA63J-104X	M.G.RESISTOR	100k	1/16W
R808	NRSA63J-103X	M.G.RESISTOR	10k	1/16W
R809	NRSA63J-103X	M.G.RESISTOR	10k	1/16W
R810	NRSA63J-103X	M.G.RESISTOR	10k	1/16W
R811	NRSA63J-103X	M.G.RESISTOR	10k	1/16W
R812	NRSA63J-103X	M.G.RESISTOR	10k	1/16W
R813	NRSA63J-103X	M.G.RESISTOR	10k	1/16W
R815	NRSA63J-0R0X	M.G.RESISTOR	0	1/16W
R816	NRSA63J-270X	M.G.RESISTOR	27	1/16W
R817	NRSA63J-103X	M.G.RESISTOR	10k	1/16W
R818	NRSA63J-103X	M.G.RESISTOR	10k	1/16W
R819	NRSA63J-103X	M.G.RESISTOR	10k	1/16W
R823	NRSA63J-394X	M.G.RESISTOR	390k	1/16W
R824	NRSA63J-332X	M.G.RESISTOR	3.3k	1/16W
R825	NRSA63J-272X	M.G.RESISTOR	2.7k	1/16W
R826	NRSA63J-103X	M.G.RESISTOR	10k	1/16W
R831	NRSA63J-0R0X	M.G.RESISTOR	0	1/16W
R832	NRSA63J-512X	M.G.RESISTOR	5.1k	1/16W
R833	NRVA63D-560X	C.M.F.RESISTOR	56	1/16W
R834	NRVA63D-560X	C.M.F.RESISTOR	56	1/16W
R835	NRVA63D-560X	C.M.F.RESISTOR	56	1/16W
R836	NRVA63D-560X	C.M.F.RESISTOR	56	1/16W
R837	NRSA63J-0R0X	M.G.RESISTOR	0	1/16W
R838	NRSA63J-105X	M.G.RESISTOR	1M	1/16W
RA101	NRZ0015-102X	RESISTOR ARRAY	1k	
RA102	NRZ0015-102X	RESISTOR ARRAY	1k	
RA103	NRZ0012-104X	RESISTOR ARRAY	100k	
RA104	NRZ0012-104X	RESISTOR ARRAY	100k	
RA105	NRZ0015-102X	RESISTOR ARRAY	1k	
RA106	NRZ0015-102X	RESISTOR ARRAY	1k	
RA107	NRZ0012-104X	RESISTOR ARRAY	100k	
RA108	NRZ0012-104X	RESISTOR ARRAY	100k	
RA401	NRZ0015-102X	RESISTOR ARRAY	1k	
RA402	NRZ0015-102X	RESISTOR ARRAY	1k	
RA403	NRZ0015-473X	RESISTOR ARRAY	47k	

Symbol No.	Part No.	Part Name	Description	
C101	NCB31HK-103X	CER.CAPACITOR	0.01	50V
C102	NCB31HK-103X	CER.CAPACITOR	0.01	50V
C103	NCB31HK-103X	CER.CAPACITOR	0.01	50V
C104	NCB31HK-103X	CER.CAPACITOR	0.01	50V
C105	NCB31HK-103X	CER.CAPACITOR	0.01	50V
C106	NCB31HK-103X	CER.CAPACITOR	0.01	50V
C108	NCB31HK-103X	CER.CAPACITOR	0.01	50V
C109	NBE51CM-226X	TAN.CAPACITOR	22	16V
C110	NCB31HK-103X	CER.CAPACITOR	0.01	50V
C112	NCB31HK-103X	CER.CAPACITOR	0.01	50V
C113	NCF31CZ-104X	CER.CAPACITOR	0.1	16V
C114	NCF31CZ-104X	CER.CAPACITOR	0.1	16V
C115	NCB31HK-103X	CER.CAPACITOR	0.01	50V
C116	NBE51CM-226X	TAN.CAPACITOR	22	16V
C117	NCF21CZ-105X	CER.CAPACITOR	1	16V
C118	NDC31HJ-100X	CER.CAPACITOR	10p	50V
C119	NCB31HK-103X	CER.CAPACITOR	0.01	50V
C120	NDC31HJ-100X	CER.CAPACITOR	10p	50V
C125	NBE41AM-226X	TAN.CAPACITOR	22	10V
C126	NBE51CM-226X	TAN.CAPACITOR	22	16V
C127	NBE40JM-226X	TAN.CAPACITOR	22	6.3V
C128	NCB31HK-103X	CER.CAPACITOR	0.01	50V
C130	NCB31HK-103X	CER.CAPACITOR	0.01	50V
C135	NBE41AM-226X	TAN.CAPACITOR	22	10V
C136	NCB31HK-103X	CER.CAPACITOR	0.01	50V
C141	NCF31CZ-104X	CER.CAPACITOR	0.1	16V
C145	NCB31HK-103X	CER.CAPACITOR	0.01	50V
C146	NCB31HK-103X	CER.CAPACITOR	0.01	50V
C147	NCB31HK-103X	CER.CAPACITOR	0.01	50V
C148	NCB31HK-103X	CER.CAPACITOR	0.01	50V
C149	NCB31HK-103X	CER.CAPACITOR	0.01	50V
C150	NCB31HK-103X	CER.CAPACITOR	0.01	50V
C201	NBE41AM-226X	TAN.CAPACITOR	22	10V
C202	NBE41AM-226X	TAN.CAPACITOR	22	10V
C203	NCB31CK-104X	CER.CAPACITOR	0.1	16V
C204	NCB31CK-104X	CER.CAPACITOR	0.1	16V
C205	NBE41AM-475X	TAN.CAPACITOR	4.7	10V
C206	NCB31CK-104X	CER.CAPACITOR	0.1	16V
C207	NCF21CZ-105X	CER.CAPACITOR	1	16V
C208	NCF21CZ-105X	CER.CAPACITOR	1	16V
C209	NCB31CK-104X	CER.CAPACITOR	0.1	16V
C210	NCB31HK-222X	CER.CAPACITOR	2200p	50V
C211	NCB31HK-222X	CER.CAPACITOR	2200p	50V
C212	NBE41AM-475X	TAN.CAPACITOR	4.7	10V
C213	NBE41AM-475X	TAN.CAPACITOR	4.7	10V
C214	NCB31CK-104X	CER.CAPACITOR	0.1	16V
C215	NCB31CK-104X	CER.CAPACITOR	0.1	16V
C216	NBE41CM-226X	TAN.CAPACITOR	22	16V
C217	NCB31CK-104X	CER.CAPACITOR	0.1	16V
C218	NCB31CK-104X	CER.CAPACITOR	0.1	16V
C219	NBE41AM-226X	TAN.CAPACITOR	22	10V
C220	NBE41CM-106X	TAN.CAPACITOR	10	16V
C221	NBE41AM-106X	TAN.CAPACITOR	10	10V
C222	NBE41CM-106X	TAN.CAPACITOR	10	16V
C223	NBE41AM-106X	TAN.CAPACITOR	10	10V
C224	NDC31HJ-221X	CER.CAPACITOR	220p	50V
C225	NCB31HK-152X	CER.CAPACITOR	1500p	50V
C226	NDC31HJ-221X	CER.CAPACITOR	220p	50V
C227	NCB31HK-472X	CER.CAPACITOR	4700p	50V
C228	NCB31HK-472X	CER.CAPACITOR	4700p	50V
C231	NCB31HK-152X	CER.CAPACITOR	1500p	50V
C303	NCB31HK-103X	CER.CAPACITOR	0.01	50V
C304	NCB31HK-103X	CER.CAPACITOR	0.01	50V
C305	NCB31HK-103X	CER.CAPACITOR	0.01	50V
C306	NCB31CK-104X	CER.CAPACITOR	0.1	16V
C307	NCB31HK-103X	CER.CAPACITOR	0.01	50V
C308	NCB31HK-103X	CER.CAPACITOR	0.01	50V
C309	NBE51AM-226X	TAN.CAPACITOR	22	10V
C310	NCB31HK-103X	CER.CAPACITOR	0.01	50V
C311	NCB31HK-103X	CER.CAPACITOR	0.01	50V
C312	NCB31HK-103X	CER.CAPACITOR	0.01	50V
C313	NCB31HK-103X	CER.CAPACITOR	0.01	50V
C314	NBE51AM-226X	TAN.CAPACITOR	22	10V

Symbol No.	Part No.	Part Name	Description	
C316	NCB31CK-104X	CER.CAPACITOR	0.1	16V
C317	NCB31HK-103X	CER.CAPACITOR	0.01	50V
C318	NCB31HK-103X	CER.CAPACITOR	0.01	50V
C319	NCB31HK-103X	CER.CAPACITOR	0.01	50V
C320	NBE51AM-226X	TAN.CAPACITOR	22	10V
C321	NCB31CK-104X	CER.CAPACITOR	0.1	16V
C323	NCB31HK-103X	CER.CAPACITOR	0.01	50V
C324	NCB31HK-103X	CER.CAPACITOR	0.01	50V
C325	NCB31CK-104X	CER.CAPACITOR	0.1	16V
C326	NCB31HK-103X	CER.CAPACITOR	0.01	50V
C327	NCB31CK-104X	CER.CAPACITOR	0.1	16V
C328	NCB31CK-104X	CER.CAPACITOR	0.1	16V
C329	NCB31CK-104X	CER.CAPACITOR	0.1	16V
C330	NCB31CK-104X	CER.CAPACITOR	0.1	16V
C331	NCB31HK-103X	CER.CAPACITOR	0.01	50V
C332	NBE51AM-226X	TAN.CAPACITOR	22	10V
C333	NCB31HK-103X	CER.CAPACITOR	0.01	50V
C334	NBE71CM-476X	TAN.CAPACITOR	47	16V
C335	NCB31CK-104X	CER.CAPACITOR	0.1	16V
C336	NCB31HK-103X	CER.CAPACITOR	0.01	50V
C337	NCB31CK-104X	CER.CAPACITOR	0.1	16V
C338	NBE51CM-226X	TAN.CAPACITOR	22	16V
C339	NCB31HK-103X	CER.CAPACITOR	0.01	50V
C340	NCB31CK-104X	CER.CAPACITOR	0.1	16V
C341	NDC31HJ-270X	CER.CAPACITOR	27p	50V
C342	NCB31HK-103X	CER.CAPACITOR	0.01	50V
C343	NBE51AM-226X	TAN.CAPACITOR	22	10V
C344	NCB31HK-103X	CER.CAPACITOR	0.01	50V
C345	NCB31HK-103X	CER.CAPACITOR	0.01	50V
C346	NCB31HK-103X	CER.CAPACITOR	0.01	50V
C347	NCB31HK-103X	CER.CAPACITOR	0.01	50V
C348	NCB31HK-103X	CER.CAPACITOR	0.01	50V
C349	NCB31HK-103X	CER.CAPACITOR	0.01	50V
C350	NCB31HK-103X	CER.CAPACITOR	0.01	50V
C351	NBE51AM-226X	TAN.CAPACITOR	22	10V
C352	NBE51CM-226X	TAN.CAPACITOR	22	16V
C353	NDC31HJ-101X	CER.CAPACITOR	100p	50V
C354	NCB31CK-823X	CER.CAPACITOR	0.082	16V
C361	NCB31CK-223X	CER.CAPACITOR	0.022	16V
C362	NCB31CK-223X	CER.CAPACITOR	0.022	16V
C363	NCB31CK-223X	CER.CAPACITOR	0.022	16V
C364	NDC31HJ-150X	CER.CAPACITOR	15p	50V
C366	NDC31HJ-4R0X	CER.CAPACITOR	4p	50V
C367	NBE41VM-474X	TAN.CAPACITOR	0.47	35V
C368	NCB31HK-103X	CER.CAPACITOR	0.01	50V
C369	NBE51AM-226X	TAN.CAPACITOR	22	10V
C401	NBE51AM-476X	TAN.CAPACITOR	47	10V
C402	NBE51AM-476X	TAN.CAPACITOR	47	10V
C403	NCF31CZ-104X	CER.CAPACITOR	0.1	16V
C404	NCF31CZ-104X	CER.CAPACITOR	0.1	16V
C405	NCF31CZ-104X	CER.CAPACITOR	0.1	16V
C406	NCF31CZ-104X	CER.CAPACITOR	0.1	16V
C407	NCF31CZ-104X	CER.CAPACITOR	0.1	16V
C408	NCF31CZ-104X	CER.CAPACITOR	0.1	16V
C409	NDC31HJ-120X	CER.CAPACITOR	12p	50V
C410	NDC31HJ-120X	CER.CAPACITOR	12p	50V
C411	NCB31CK-223X	CER.CAPACITOR	0.022	16V
C412	NCB31CK-223X	CER.CAPACITOR	0.022	16V
C413	NCB31CK-223X	CER.CAPACITOR	0.022	16V
C414	NCB31CK-223X	CER.CAPACITOR	0.022	16V
C415	NBE41AM-226X	TAN.CAPACITOR	22	10V
C416	NCF31CZ-104X	CER.CAPACITOR	0.1	16V
C417	NCF21CZ-105X	CER.CAPACITOR	1	16V
C418	NCF31CZ-104X	CER.CAPACITOR	0.1	16V
C419	NCB31EK-103X	CER.CAPACITOR	0.01	25V
C501	NDC31HJ-220X	CER.CAPACITOR	22p	50V
C502	NCF31CZ-104X	CER.CAPACITOR	0.1	16V
C503	NCB31HK-103X	CER.CAPACITOR	0.01	50V
C505	NCB31HK-103X	CER.CAPACITOR	0.01	50V
C506	NCB31HK-103X	CER.CAPACITOR	0.01	50V
C507	NCB31HK-103X	CER.CAPACITOR	0.01	50V
C508	NCB31HK-103X	CER.CAPACITOR	0.01	50V
C509	NCB31HK-103X	CER.CAPACITOR	0.01	50V

[DV MAIN]

Symbol No.	Part No.	Part Name	Description	
C510	NCB31HK-681X	CER.CAPACITOR	680p	50V
C511	NCB31HK-103X	CER.CAPACITOR	0.01	50V
C512	NCB31HK-103X	CER.CAPACITOR	0.01	50V
C513	NCB31HK-103X	CER.CAPACITOR	0.01	50V
C514	NCB31HK-103X	CER.CAPACITOR	0.01	50V
C515	NCF31CZ-104X	CER.CAPACITOR	0.1	16V
C516	NCB31HK-103X	CER.CAPACITOR	0.01	50V
C517	NCF31CZ-104X	CER.CAPACITOR	0.1	16V
C518	NCF31CZ-104X	CER.CAPACITOR	0.1	16V
C519	NCB31HK-103X	CER.CAPACITOR	0.01	50V
C520	NCB31HK-103X	CER.CAPACITOR	0.01	50V
C521	NCB31HK-103X	CER.CAPACITOR	0.01	50V
C522	NBE41AM-226X	TAN.CAPACITOR	22	10V
C523	NCB31HK-103X	CER.CAPACITOR	0.01	50V
C524	NCB31HK-103X	CER.CAPACITOR	0.01	50V
C525	NCB31HK-103X	CER.CAPACITOR	0.01	50V
C526	NCB31CK-273X	CER.CAPACITOR	0.027	16V
C527	NCB31HK-103X	CER.CAPACITOR	0.01	50V
C528	NCB21AK-105X	CER.CAPACITOR	1	10V
C529	NCB31HK-103X	CER.CAPACITOR	0.01	50V
C531	NCB31HK-103X	CER.CAPACITOR	0.01	50V
C532	NCB31HK-103X	CER.CAPACITOR	0.01	50V
C533	NBE41AM-226X	TAN.CAPACITOR	22	10V
C534	NCB31HK-103X	CER.CAPACITOR	0.01	50V
C537	NCB31HK-103X	CER.CAPACITOR	0.01	50V
C538	NCF31CZ-334X	CER.CAPACITOR	0.33	16V
C539	NCB31HK-103X	CER.CAPACITOR	0.01	50V
C540	NCF31CZ-334X	CER.CAPACITOR	0.33	16V
C541	NDC31HJ-151X	CER.CAPACITOR	150p	50V
C542	NCB31HK-103X	CER.CAPACITOR	0.01	50V
C543	NCB31HK-103X	CER.CAPACITOR	0.01	50V
C544	NCB31HK-152X	CER.CAPACITOR	1500p	50V
C545	NCF21CZ-225X	CER.CAPACITOR	2.2	16V
C546	NCB31HK-103X	CER.CAPACITOR	0.01	50V
C547	NBE41AM-226X	TAN.CAPACITOR	22	10V
C555	NCB31CK-223X	CER.CAPACITOR	0.022	16V
C579	NBE51CM-226X	TAN.CAPACITOR	22	16V
C580	NBE41AM-226X	TAN.CAPACITOR	22	10V
C581	NCB31HK-103X	CER.CAPACITOR	0.01	50V
C582	NCB31HK-103X	CER.CAPACITOR	0.01	50V
C583	NBE71CM-476X	TAN.CAPACITOR	47	16V
C584	NBE71CM-476X	TAN.CAPACITOR	47	16V
C590	NCB31HK-103X	CER.CAPACITOR	0.01	50V
C591	NCB31HK-103X	CER.CAPACITOR	0.01	50V
C592	NCB31CK-273X	CER.CAPACITOR	0.027	16V
C593	NCB31HK-103X	CER.CAPACITOR	0.01	50V
C601	NCF21CZ-105X	CER.CAPACITOR	1	16V
C602	NDC31HJ-101X	CER.CAPACITOR	100p	50V
C603	NCF21CZ-105X	CER.CAPACITOR	1	16V
C604	NCB31EK-103X	CER.CAPACITOR	0.01	25V
C605	NDC31HJ-101X	CER.CAPACITOR	100p	50V
C606	NDC31HJ-220X	CER.CAPACITOR	22p	50V
C607	NDC31HJ-150X	CER.CAPACITOR	15p	50V
C608	NCF21CZ-105X	CER.CAPACITOR	1	16V
C609	NCB31EK-103X	CER.CAPACITOR	0.01	25V
C610	NCB31EK-103X	CER.CAPACITOR	0.01	25V
C611	NCB31CK-104X	CER.CAPACITOR	0.1	16V
C612	NCB31HK-561X	CER.CAPACITOR	560p	50V
C613	NCB31EK-103X	CER.CAPACITOR	0.01	25V
C614	NDC31HJ-5R0X	CER.CAPACITOR	5p	50V
C615	NDC31HJ-120X	CER.CAPACITOR	12p	50V
C617	NCB31EK-103X	CER.CAPACITOR	0.01	25V
C619	NCB31EK-103X	CER.CAPACITOR	0.01	25V
C620	NCB31CK-104X	CER.CAPACITOR	0.1	16V
C621	NCB31CK-104X	CER.CAPACITOR	0.1	16V
C622	NCB31CK-104X	CER.CAPACITOR	0.1	16V
C623	NCB31CK-104X	CER.CAPACITOR	0.1	16V
C624	NCB31CK-104X	CER.CAPACITOR	0.1	16V
C625	NCB31CK-104X	CER.CAPACITOR	0.1	16V
C626	NCB31EK-103X	CER.CAPACITOR	0.01	25V
C627	NCB31CK-104X	CER.CAPACITOR	0.1	16V
C628	NCB31CK-104X	CER.CAPACITOR	0.1	16V
C629	NCB31CK-104X	CER.CAPACITOR	0.1	16V

Symbol No.	Part No.	Part Name	Description	
C630	NCB31CK-104X	CER.CAPACITOR	0.1	16V
C631	NCB31CK-104X	CER.CAPACITOR	0.1	16V
C632	NCB31CK-104X	CER.CAPACITOR	0.1	16V
C633	NCB31EK-103X	CER.CAPACITOR	0.01	25V
C634	NCB31EK-103X	CER.CAPACITOR	0.01	25V
C635	NCB31EK-103X	CER.CAPACITOR	0.01	25V
C638	NCB31EK-103X	CER.CAPACITOR	0.01	25V
C639	NCB31CK-104X	CER.CAPACITOR	0.1	16V
C640	NBE51AM-226X	TAN.CAPACITOR	22	10V
C641	NBE51AM-226X	TAN.CAPACITOR	22	10V
C642	NCB31CK-104X	CER.CAPACITOR	0.1	16V
C643	NCB31CK-104X	CER.CAPACITOR	0.1	16V
C644	NCB31CK-104X	CER.CAPACITOR	0.1	16V
C645	NCB31CK-104X	CER.CAPACITOR	0.1	16V
C646	NCB31CK-104X	CER.CAPACITOR	0.1	16V
C647	NCB31CK-104X	CER.CAPACITOR	0.1	16V
C649	NCB31CK-104X	CER.CAPACITOR	0.1	16V
C650	NCB31CK-104X	CER.CAPACITOR	0.1	16V
C651	NBE51AM-226X	TAN.CAPACITOR	22	10V
C652	NCB31CK-104X	CER.CAPACITOR	0.1	16V
C653	NBE51AM-226X	TAN.CAPACITOR	22	10V
C654	NBE51AM-226X	TAN.CAPACITOR	22	10V
C655	NBE51AM-226X	TAN.CAPACITOR	22	10V
C656	NCB31EK-103X	CER.CAPACITOR	0.01	25V
C657	NDC31HJ-101X	CER.CAPACITOR	100p	50V
C658	NCB21CK-474X	CER.CAPACITOR	0.47	16V
C659	NCB31EK-103X	CER.CAPACITOR	0.01	25V
C660	NCB31CK-473X	CER.CAPACITOR	0.047	16V
C661	NCB21CK-224X	CER.CAPACITOR	0.22	16V
C662	NBE41AM-106X	TAN.CAPACITOR	10	10V
C663	NBE21CM-684X	TAN.CAPACITOR	0.68	16V
C664	NCB31HK-681X	CER.CAPACITOR	680p	50V
C665	NCB31EK-103X	CER.CAPACITOR	0.01	25V
C666	NDC31HJ-270X	CER.CAPACITOR	27p	50V
C667	NCB31CK-273X	CER.CAPACITOR	0.027	16V
C668	NCF21CZ-105X	CER.CAPACITOR	1	16V
C669	NBE61CM-107X	TAN.CAPACITOR	100	16V
C672	NCB31HK-152X	CER.CAPACITOR	1500p	50V
C673	NCB31EK-103X	CER.CAPACITOR	0.01	25V
C674	NCB31HK-102X	CER.CAPACITOR	1000p	50V
C675	NCB31EK-103X	CER.CAPACITOR	0.01	25V
C676	NBE61CM-107X	TAN.CAPACITOR	100	16V
C677	NCB31EK-103X	CER.CAPACITOR	0.01	25V
C678	NCB31CK-104X	CER.CAPACITOR	0.1	16V
C680	NBE41CM-335X	TAN.CAPACITOR	3.3	16V
C681	NCB31EK-103X	CER.CAPACITOR	0.01	25V
C682	NBE61CM-107X	TAN.CAPACITOR	100	16V
C683	NCB31EK-103X	CER.CAPACITOR	0.01	25V
C684	NCB31EK-103X	CER.CAPACITOR	0.01	25V
C685	NCB31EK-103X	CER.CAPACITOR	0.01	25V
C687	NCF21CZ-105X	CER.CAPACITOR	1	16V
C688	NCB31EK-103X	CER.CAPACITOR	0.01	25V
C689	NCB31EK-103X	CER.CAPACITOR	0.01	25V
C690	NCF21CZ-105X	CER.CAPACITOR	1	16V
C691	NCB31CK-104X	CER.CAPACITOR	0.1	16V
C692	NCF21CZ-105X	CER.CAPACITOR	1	16V
C693	NCF21CZ-105X	CER.CAPACITOR	1	16V
C694	NBE21CM-225X	TAN.CAPACITOR	2.2	16V
C695	NCB31CK-104X	CER.CAPACITOR	0.1	16V
C696	NDC31HJ-150X	CER.CAPACITOR	15p	50V
C697	NCB31CK-104X	CER.CAPACITOR	0.1	16V
C698	NCB31CK-104X	CER.CAPACITOR	0.1	16V
C699	NDC31HJ-150X	CER.CAPACITOR	15p	50V
C700	NCB31CK-104X	CER.CAPACITOR	0.1	16V
C706	NCB31EK-103X	CER.CAPACITOR	0.01	25V
C709	NCB31EK-103X	CER.CAPACITOR	0.01	25V
C710	NCB31EK-103X	CER.CAPACITOR	0.01	25V
C711	NBE51AM-226X	TAN.CAPACITOR	22	10V
C712	NBE51AM-226X	TAN.CAPACITOR	22	10V
C713	NCB31CK-104X	CER.CAPACITOR	0.1	16V
C714	NCB31CK-104X	CER.CAPACITOR	0.1	16V
C717	NCB31CK-104X	CER.CAPACITOR	0.1	16V

Symbol No.	Part No.	Part Name	Description
C718	NCB31EK-103X	CER.CAPACITOR	0.01 25V
C719	NCB31CK-104X	CER.CAPACITOR	0.1 16V
C720	NCB31CK-104X	CER.CAPACITOR	0.1 16V
C721	NDC31HJ-180X	CER.CAPACITOR	18p 50V
C722	NDC31HJ-180X	CER.CAPACITOR	18p 50V
C738	NCB41CM-106X	CER.CAPACITOR	10 16V
C739	NCB41CM-106X	CER.CAPACITOR	10 16V
C801	NBE41AM-226X	TAN.CAPACITOR	22 10V
C802	NCF31CZ-104X	CER.CAPACITOR	0.1 16V
C803	NBE40JM-226X	TAN.CAPACITOR	22 6.3V
C804	NCF31CZ-104X	CER.CAPACITOR	0.1 16V
C805	NCB31HK-103X	CER.CAPACITOR	0.01 50V
C806	NCB31HK-103X	CER.CAPACITOR	0.01 50V
C807	NCB31HK-103X	CER.CAPACITOR	0.01 50V
C808	NCB31HK-103X	CER.CAPACITOR	0.01 50V
C809	NCB31HK-103X	CER.CAPACITOR	0.01 50V
C810	NCB31HK-103X	CER.CAPACITOR	0.01 50V
C811	NCB31HK-102X	CER.CAPACITOR	1000p 50V
C812	NCB31HK-103X	CER.CAPACITOR	0.01 50V
C813	NCB31HK-103X	CER.CAPACITOR	0.01 50V
C814	NBE41AM-226X	TAN.CAPACITOR	22 10V
C815	NCF31CZ-104X	CER.CAPACITOR	0.1 16V
C816	NCB31HK-103X	CER.CAPACITOR	0.01 50V
C817	NCF31CZ-104X	CER.CAPACITOR	0.1 16V
C819	NCF31CZ-104X	CER.CAPACITOR	0.1 16V
C820	NDC31HJ-271X	CER.CAPACITOR	270p 50V
C821	NDC31HJ-5R0X	CER.CAPACITOR	5p 50V
C822	NDC31HJ-6R0X	CER.CAPACITOR	6p 50V
L111	NQL23CM-330X	COIL	33uH
L112	NQL23CM-330X	COIL	33uH
L113	NQL044K-470X	COIL	47uH
L114	NQL23CM-330X	COIL	33uH
L115	NQL23CM-330X	COIL	33uH
L201	NQL114K-100X	COIL	10uH
L202	NQL114K-100X	COIL	10uH
L301	NQL044K-100X	COIL	10uH
L302	NQL044K-100X	COIL	10uH
L303	NQL044K-100X	COIL	10uH
L304	NQL024J-1R2X	COIL	1.2uH
L305	NQL044K-100X	COIL	10uH
L306	NQL044K-100X	COIL	10uH
L307	NQL044K-100X	COIL	10uH
L309	NQL044K-100X	COIL	10uH
L310	NQL044K-100X	COIL	10uH
L311	NQL044K-100X	COIL	10uH
L312	NQL044K-100X	COIL	10uH
L313	NQL044K-100X	COIL	10uH
L401	NQL044K-100X	COIL	10uH
L501	NQL044K-100X	COIL	10uH
L502	NQL044K-100X	COIL	10uH
L511	NQL114K-470X	COIL	47uH
L513	NQL044K-100X	COIL	10uH
L601	NQL044K-100X	COIL	10uH
L602	NQL024J-150X	COIL	15uH
L603	NQL044K-100X	COIL	10uH
L604	NQL044K-100X	COIL	10uH
L605	NQL044K-100X	COIL	10uH
L606	NQL024J-5R6X	COIL	5.6uH
L608	NQL044K-100X	COIL	10uH
L609	NQL044K-100X	COIL	10uH
L610	NQL044K-221X	COIL	220uH
L612	NQL044K-221X	COIL	220uH
L613	NQL044K-100X	COIL	10uH
L614	NQL044K-220X	COIL	22uH
L615	NQL044K-220X	COIL	22uH
L801	NQL044K-100X	COIL	10uH
L802	NQL044K-100X	COIL	10uH
L803	NQL044K-100X	COIL	10uH
L804	NQR0276-001X	COIL	000uH
LC101	PGZ01972Z	LC FILTER	

Symbol No.	Part No.	Part Name	Description
LC102	PGZ01972Z	LC FILTER	
LC103	PGZ01972Z	LC FILTER	
LC104	PGZ01972Z	LC FILTER	
LC105	PGZ01972Z	LC FILTER	
LC301	PGZ01972Z	LC FILTER	
LC302	PGZ01972Z	LC FILTER	
LC303	PGZ01972Z	LC FILTER	
LC501	PGZ01972Z	LC FILTER	
LC502	PGZ01972Z	LC FILTER	
X101	NAX0349-001X	CRYSTAL	27MHz
X401	NAX0348-001X	CRYSTAL	27MHz
X601	NAX0227-001X	CRYSTAL	503kHz
X602	NAX0348-001X	CRYSTAL	27MHz
X603	NAX0280-001X	CRYSTAL	26.995MHz
X801	NAX0241-001X	CRYSTAL	24.576MHz
CN1	QGB0805L2-60X	CONNECTOR	60PIN
CN2	QGB0805L2-60X	CONNECTOR	60PIN
CN102	QGA1201C2-13X	CONNECTOR	13PIN
CN104	QGB0801L1-26X	CONNECTOR	26PIN
CN106	QGA1201F2-08X	CONNECTOR	8PIN
CN108	QGF0508F1-10X	CONNECTOR	10PIN
CN401	QGF0508F1-18X	CONNECTOR	18PIN
CN402	QGF0508F1-20X	CONNECTOR	20PIN
CN403	QGB0801L1-26X	CONNECTOR	26PIN
CN501	QGF0508F1-20X	CONNECTOR	20PIN
CN801	QGA1201F2-06X	CONNECTOR	6PIN
TP101	NNZ0009-001X	TEST POINT	TP101-602
K101	PGZ00627Z	FERRATE BEADS	
K102	PGZ00627Z	FERRATE BEADS	
K301	NQR0269-004X	FERRITE BEADS	
K303	NRSA63J-330X	M.G.RESISTOR	33 1/16W
K401	PGZ00627Z	FERRATE BEADS	
K402	PGZ00627Z	FERRATE BEADS	
K403	PGZ00627Z	FERRATE BEADS	
K404	PGZ00627Z	FERRATE BEADS	
K601	PGZ00627Z	FERRATE BEADS	
K602	NQR0269-004X	FERRITE BEADS	
K603	NQR0269-004X	FERRITE BEADS	
K604	NQR0269-004X	FERRITE BEADS	
K605	NQR0269-004X	FERRITE BEADS	
K801	PGZ00627Z	FERRATE BEADS	
LA301	NQR0320-010X	F.B.ARRAY	
LA302	NQR0320-010X	F.B.ARRAY	
LA303	NQR0320-010X	F.B.ARRAY	
LA401	NQR0330-009X	EMI FILTER ARY	
LA402	NQR0330-009X	EMI FILTER ARY	
LA403	NQR0330-009X	EMI FILTER ARY	
LA404	NQR0330-009X	EMI FILTER ARY	
LA601	NQR0330-009X	EMI FILTER ARY	
LA602	NQR0330-009X	EMI FILTER ARY	
LA603	NQR0330-009X	EMI FILTER ARY	
LA604	NQR0330-009X	EMI FILTER ARY	
LA605	NQR0330-009X	EMI FILTER ARY	
LA606	NQR0320-010X	F.B.ARRAY	
LA607	NQR0320-010X	F.B.ARRAY	

6.6 ISB BOARD ASSEMBLY PARTS LIST [1][1]

CK263100A2 [1][1]

Symbol No.	Part No.	Part Name	Description	
SK501	QNV0027-010	IC SOCKET	FOR IC501, CCD	
IC503	CXA1439M-X	I.C.(M)	SONY	
IC504	AD8031ART-X	I.C.(M)	ANALOG DEVICES	
IC505	TC74VHC04FT-X	I.C.(M)	TOSHIBA	
Q501	2SC3930/BC/-X	TRANSISTOR	MATSUSHITA	
Q502	2SC3930/BC/-X	TRANSISTOR	MATSUSHITA	
R501	NRSA63J-105X	M.G.RESISTOR	1M	1/16W
R502	NRSA63D-391X	M.G.RESISTOR	390	1/16W
R503	NRSA63D-184X	M.G.RESISTOR	180k	1/16W
R504	NRSA63D-273X	M.G.RESISTOR	27k	1/16W
R505	NRSA63D-682X	M.G.RESISTOR	6.8k	1/16W
R506	NRSA63D-101X	M.G.RESISTOR	100	1/16W
R507	NRSA63D-112X	M.G.RESISTOR	1.1k	1/16W
R508	NRSA63D-102X	M.G.RESISTOR	1k	1/16W
R509	NRSA63D-102X	M.G.RESISTOR	1k	1/16W
R510	NRSA63J-0R0X	M.G.RESISTOR	0	1/16W
R511	NRSA63D-180X	M.G.RESISTOR	18	1/16W
R512	NRSA63D-180X	M.G.RESISTOR	18	1/16W
R513	NRSA63D-180X	M.G.RESISTOR	18	1/16W
R514	NRSA63D-180X	M.G.RESISTOR	18	1/16W
R524	NRSA63D-562X	M.G.RESISTOR	5.6k	1/16W
R525	NRSA63D-123X	M.G.RESISTOR	12k	1/16W
C501	NCB31EK-473X	CER.CAPACITOR	0.047	25V
C504	NBE40GM-476X	TAN.CAPACITOR	47	
C505	NCB31EK-473X	CER.CAPACITOR	0.047	25V
C506	NBE21AM-225X	TAN.CAPACITOR	2.2	10V
C507	NBE41VM-335X	TAN.CAPACITOR	3.3	35V
C508	NCB31EK-473X	CER.CAPACITOR	0.047	25V
C509	NCB31EK-473X	CER.CAPACITOR	0.047	25V
C510	NCB31EK-473X	CER.CAPACITOR	0.047	25V
C511	NCB31EK-473X	CER.CAPACITOR	0.047	25V
C512	NBE71CM-476X	TAN.CAPACITOR	47	16V
C513	NCB31EK-473X	CER.CAPACITOR	0.047	25V
C514	NBE21CM-475X	TAN.CAPACITOR	4.7	16V
C515	NBE21CM-475X	TAN.CAPACITOR	4.7	16V
C518	NCB11CK-105X	CER.CAPACITOR	1	16V
C519	NCB11CK-105X	CER.CAPACITOR	1	16V
C520	NCB31EK-473X	CER.CAPACITOR	0.047	25V
C521	NCB31EK-473X	CER.CAPACITOR	0.047	25V
C522	NCB31EK-473X	CER.CAPACITOR	0.047	25V
C526	NBE21CM-475X	TAN.CAPACITOR	4.7	16V
C527	NBE71CM-476X	TAN.CAPACITOR	47	16V
LC501	SCV1804-222Z	LC FILTER		
CN11	QGF0508F2-20X	CONNECTOR	20PIN	

6.7 ISG BOARD ASSEMBLY PARTS LIST [1][2]

CK263100A3 [1][2]

Symbol No.	Part No.	Part Name	Description	
SK501	QNV0027-010	IC SOCKET	FOR IC501, CCD	
IC503	CXA1439M-X	I.C.(M)	SONY	
IC504	AD8031ART-X	I.C.(M)	ANALOG DEVICES	
IC505	TC74VHC04FT-X	I.C.(M)	TOSHIBA	
Q501	2SC3930/BC/-X	TRANSISTOR	MATSUSHITA	
Q502	2SC3930/BC/-X	TRANSISTOR	MATSUSHITA	
R501	NRSA63J-105X	M.G.RESISTOR	1M	1/16W
R502	NRSA63D-391X	M.G.RESISTOR	390	1/16W
R503	NRSA63D-184X	M.G.RESISTOR	180k	1/16W
R504	NRSA63D-273X	M.G.RESISTOR	27k	1/16W
R505	NRSA63D-682X	M.G.RESISTOR	6.8k	1/16W
R506	NRSA63D-101X	M.G.RESISTOR	100	1/16W
R507	NRSA63D-112X	M.G.RESISTOR	1.1k	1/16W
R508	NRSA63D-102X	M.G.RESISTOR	1k	1/16W
R509	NRSA63D-102X	M.G.RESISTOR	1k	1/16W
R510	NRSA63J-0R0X	M.G.RESISTOR	0	1/16W
R511	NRSA63D-180X	M.G.RESISTOR	18	1/16W
R512	NRSA63D-180X	M.G.RESISTOR	18	1/16W
R513	NRSA63D-180X	M.G.RESISTOR	18	1/16W
R514	NRSA63D-180X	M.G.RESISTOR	18	1/16W
R524	NRSA63D-562X	M.G.RESISTOR	5.6k	1/16W
R525	NRSA63D-123X	M.G.RESISTOR	12k	1/16W
C501	NCB31EK-473X	CER.CAPACITOR	0.047	25V
C504	NBE40GM-476X	TAN.CAPACITOR	47	
C505	NCB31EK-473X	CER.CAPACITOR	0.047	25V
C506	NBE21AM-225X	TAN.CAPACITOR	2.2	10V
C507	NBE41VM-335X	TAN.CAPACITOR	3.3	35V
C508	NCB31EK-473X	CER.CAPACITOR	0.047	25V
C509	NCB31EK-473X	CER.CAPACITOR	0.047	25V
C510	NCB31EK-473X	CER.CAPACITOR	0.047	25V
C511	NCB31EK-473X	CER.CAPACITOR	0.047	25V
C512	NBE71CM-476X	TAN.CAPACITOR	47	16V
C513	NCB31EK-473X	CER.CAPACITOR	0.047	25V
C514	NBE21CM-475X	TAN.CAPACITOR	4.7	16V
C515	NBE21CM-475X	TAN.CAPACITOR	4.7	16V
C518	NCB11CK-105X	CER.CAPACITOR	1	16V
C519	NCB11CK-105X	CER.CAPACITOR	1	16V
C520	NCB31EK-473X	CER.CAPACITOR	0.047	25V
C521	NCB31EK-473X	CER.CAPACITOR	0.047	25V
C522	NCB31EK-473X	CER.CAPACITOR	0.047	25V
C526	NBE21CM-475X	TAN.CAPACITOR	4.7	16V
C527	NBE71CM-476X	TAN.CAPACITOR	47	16V
LC501	SCV1804-222Z	LC FILTER		
CN12	QGF0508F1-20X	CONNECTOR	20PIN	

6.8 ISR BOARD ASSEMBLY PARTS LIST [1][3]

CK263100A4 [1][3]

Symbol No.	Part No.	Part Name	Description	
SK501	QNV0027-010	IC SOCKET	FOR IC501, CCD	
IC503	CXA1439M-X	I.C.(M)	SONY	
IC504	AD8031ART-X	I.C.(M)	ANALOG DEVICES	
IC505	TC74VHC04FT-X	I.C.(M)	TOSHIBA	
Q501	2SC3930/BC/-X	TRANSISTOR	MATSUSHITA	
Q502	2SC3930/BC/-X	TRANSISTOR	MATSUSHITA	
R501	NRSA63J-105X	M.G.RESISTOR	1M	1/16W
R502	NRSA63D-391X	M.G.RESISTOR	390	1/16W
R503	NRSA63D-184X	M.G.RESISTOR	180k	1/16W
R504	NRSA63D-273X	M.G.RESISTOR	27k	1/16W
R505	NRSA63D-682X	M.G.RESISTOR	6.8k	1/16W
R506	NRSA63D-101X	M.G.RESISTOR	100	1/16W
R507	NRSA63D-112X	M.G.RESISTOR	1.1k	1/16W
R508	NRSA63D-102X	M.G.RESISTOR	1k	1/16W
R509	NRSA63D-102X	M.G.RESISTOR	1k	1/16W
R510	NRSA63J-0R0X	M.G.RESISTOR	0	1/16W
R511	NRSA63D-180X	M.G.RESISTOR	18	1/16W
R512	NRSA63D-180X	M.G.RESISTOR	18	1/16W
R513	NRSA63D-180X	M.G.RESISTOR	18	1/16W
R514	NRSA63D-180X	M.G.RESISTOR	18	1/16W
R524	NRSA63D-562X	M.G.RESISTOR	5.6k	1/16W
R525	NRSA63D-123X	M.G.RESISTOR	12k	1/16W
C501	NCB31EK-473X	CER.CAPACITOR	0.047	25V
C504	NBE40GM-476X	TAN.CAPACITOR	47	
C505	NCB31EK-473X	CER.CAPACITOR	0.047	25V
C506	NBE21AM-225X	TAN.CAPACITOR	2.2	10V
C507	NBE41VM-335X	TAN.CAPACITOR	3.3	35V
C508	NCB31EK-473X	CER.CAPACITOR	0.047	25V
C509	NCB31EK-473X	CER.CAPACITOR	0.047	25V
C510	NCB31EK-473X	CER.CAPACITOR	0.047	25V
C511	NCB31EK-473X	CER.CAPACITOR	0.047	25V
C512	NBE71CM-476X	TAN.CAPACITOR	47	16V
C513	NCB31EK-473X	CER.CAPACITOR	0.047	25V
C514	NBE21CM-475X	TAN.CAPACITOR	4.7	16V
C515	NBE21CM-475X	TAN.CAPACITOR	4.7	16V
C518	NCB11CK-105X	CER.CAPACITOR	1	16V
C519	NCB11CK-105X	CER.CAPACITOR	1	16V
C520	NCB31EK-473X	CER.CAPACITOR	0.047	25V
C521	NCB31EK-473X	CER.CAPACITOR	0.047	25V
C522	NCB31EK-473X	CER.CAPACITOR	0.047	25V
C526	NBE21CM-475X	TAN.CAPACITOR	4.7	16V
C527	NBE71CM-476X	TAN.CAPACITOR	47	16V
LC501	SCV1804-222Z	LC FILTER		
CN13	QGF0508F1-20X	CONNECTOR	20PIN	

6.9 TG BOARD ASSEMBLY PARTS LIST [1][4]

CK2631U0A1(U)

CK2631E0A1(E) [1][4]

Symbol No.	Part No.	Part Name	Description	
IC1	CXD1265R	I.C.(M)	SONY	
IC2	MN3112SA-X	I.C.(M)	MATSUSHITA	
IC3	MN3112SA-X	I.C.(M)	MATSUSHITA	
IC4	MN3112SA-X	I.C.(M)	MATSUSHITA	
IC5	NJM78L15UA-X	I.C.(M)	JRC	
IC6	TC74VHC08FT-X	I.C.(M)	TOSHIBA	
IC7	TC74VHC08FT-X	I.C.(M)	TOSHIBA	
IC8	AN77L05M-X	I.C.(M)	MATSUSHITA	
IC9	EPM3032AT10-001	I.C.(M)	ALTERA	
IC10	TC74VHCT541AFTX	I.C.(M)	TOSHIBA	
IC11	NJU7231U33-X	I.C.(M)	JRC	
IC12	AN77L05M-X	I.C.(M)	MATSUSHITA	
IC13	AN77L05M-X	I.C.(M)	MATSUSHITA	
IC14	AN77L05M-X	I.C.(M)	MATSUSHITA	
IC16	AN77L05M-X	I.C.(M)	MATSUSHITA	
IC19	TLC2932IPW-X	I.C.(M)	TEXAS	
IC21	TC7SH04FU-X	I.C.(M)	TOSHIBA	
Q1	2SB1219/QR/-X	TRANSISTOR	MATSUSHITA	
D1	MA142A-X	DIODE	MATSUSHITA	
D2	MA142A-X	DIODE	MATSUSHITA	
D3	MA142A-X	DIODE	MATSUSHITA	
D4	MA142A-X	DIODE	MATSUSHITA	
D5	MA142A-X	DIODE	MATSUSHITA	
R1	NRSA63J-0R0X	M.G.RESISTOR	0	1/16W (E)
R3	NRSA63D-104X	M.G.RESISTOR	100k	1/16W
R4	NRSA63D-821X	M.G.RESISTOR	820	1/16W
R5	NRSA63D-104X	M.G.RESISTOR	100k	1/16W
R6	NRSA63D-821X	M.G.RESISTOR	820	1/16W
R7	NRSA63D-104X	M.G.RESISTOR	100k	1/16W
R8	NRSA63D-821X	M.G.RESISTOR	820	1/16W
R9	NRSA63D-272X	M.G.RESISTOR	2.7k	1/16W
R10	NRSA63D-472X	M.G.RESISTOR	4.7k	1/16W
R11	NRSA63D-332X	M.G.RESISTOR	3.3k	1/16W
R12	NRSA63D-223X	M.G.RESISTOR	22k	1/16W
R13	NRSA63J-0R0X	M.G.RESISTOR	0	1/16W
R14	NRSA63D-561X	M.G.RESISTOR	560	1/16W
R15	NRSA63D-563X	M.G.RESISTOR	56k	1/16W
R16	NRSA63D-560X	M.G.RESISTOR	56	1/16W
R17	NRSA63D-101X	M.G.RESISTOR	100	1/16W
R18	NRSA63J-0R0X	M.G.RESISTOR	0	1/16W
R19	NRSA63J-0R0X	M.G.RESISTOR	0	1/16W
R21	NRSA63J-0R0X	M.G.RESISTOR	0	1/16W
R23	NRSA63J-0R0X	M.G.RESISTOR	0	1/16W (U)
R24	NRSA63J-0R0X	M.G.RESISTOR	0	1/16W (E)
R25	NRSA63D-102X	M.G.RESISTOR	1k	1/16W
R26	NRSA63D-102X	M.G.RESISTOR	1k	1/16W
R27	NRSA63D-102X	M.G.RESISTOR	1k	1/16W
R28	NRSA63D-102X	M.G.RESISTOR	1k	1/16W
C1	NDC31HJ-221X	CER.CAPACITOR	220p	50V
C2	NDC31HJ-221X	CER.CAPACITOR	220p	50V
C3	NCB31CK-473X	CER.CAPACITOR	0.047	16V
C4	NCB11CK-105X	CER.CAPACITOR	1	16V
C5	NCB11CK-105X	CER.CAPACITOR	1	16V
C6	NCB11CK-105X	CER.CAPACITOR	1	16V
C7	NDC31HJ-121X	CER.CAPACITOR	120p	50V
C8	NDC31HJ-470X	CER.CAPACITOR	47p	50V
C9	NDC31HJ-560X	CER.CAPACITOR	56p	50V
C10	NBE41VM-105X	TAN.CAPACITOR	1	35V
C11	NBE41VM-105X	TAN.CAPACITOR	1	35V
C12	NBE41VM-105X	TAN.CAPACITOR	1	35V
C13	NCB31CK-473X	CER.CAPACITOR	0.047	16V
C14	NBSH1AM-227X	TAN.CAPACITOR	220	10V
C15	NCB31EK-473X	CER.CAPACITOR	0.047	25V
C16	NBE41CM-106X	TAN.CAPACITOR	10	16V
C17	NCB31EK-473X	CER.CAPACITOR	0.047	25V
C18	NBSH1AM-227X	TAN.CAPACITOR	220	10V
C19	NBE41CM-106X	TAN.CAPACITOR	10	16V
C20	NCB31CK-473X	CER.CAPACITOR	0.047	16V

[TG]

Symbol No.	Part No.	Part Name	Description
C21	NBE21CM-105X	TAN.CAPACITOR	1 16V
C22	NBE41VM-335X	TAN.CAPACITOR	3.3 35V
C23	NBE51EM-106X	TAN.CAPACITOR	10 25V
C24	NBE21CM-105X	TAN.CAPACITOR	1 16V
C25	NBE41VM-335X	TAN.CAPACITOR	3.3 35V
C26	NBE51EM-106X	TAN.CAPACITOR	10 25V
C27	NBE21CM-105X	TAN.CAPACITOR	1 16V
C28	NBE41VM-335X	TAN.CAPACITOR	3.3 35V
C29	NBE51EM-106X	TAN.CAPACITOR	10 25V
C30	NBE41VM-335X	TAN.CAPACITOR	3.3 35V
C31	NBE41VM-335X	TAN.CAPACITOR	3.3 35V
C32	NBE51VM-475X	TAN.CAPACITOR	4.7 35V
C33	NBE51CM-336X	TAN.CAPACITOR	33 16V
C34	NBE71CM-476X	TAN.CAPACITOR	47 16V
C35	NCB31EK-473X	CER.CAPACITOR	0.047 25V
C36	NCB31EK-473X	CER.CAPACITOR	0.047 25V
C37	NCB31EK-473X	CER.CAPACITOR	0.047 25V
C38	NCB31EK-473X	CER.CAPACITOR	0.047 25V
C39	NCB31EK-473X	CER.CAPACITOR	0.047 25V
C40	NCB31CK-473X	CER.CAPACITOR	0.047 16V
C41	NCB31CK-473X	CER.CAPACITOR	0.047 16V
C42	NCB31CK-473X	CER.CAPACITOR	0.047 16V
C43	NCB31CK-473X	CER.CAPACITOR	0.047 16V
C44	NCB31CK-473X	CER.CAPACITOR	0.047 16V
C45	NCB31CK-473X	CER.CAPACITOR	0.047 16V
C46	NCB31CK-473X	CER.CAPACITOR	0.047 16V
C47	NCB31CK-473X	CER.CAPACITOR	0.047 16V
C48	NCB31CK-473X	CER.CAPACITOR	0.047 16V
C49	NDC31HJ-121X	CER.CAPACITOR	120p 50V
C50	NCB31CK-473X	CER.CAPACITOR	0.047 16V
C51	NDC31HJ-270X	CER.CAPACITOR	27p 50V
C52	NCB31CK-473X	CER.CAPACITOR	0.047 16V
C53	NCB31CK-473X	CER.CAPACITOR	0.047 16V
C54	NCB31CK-473X	CER.CAPACITOR	0.047 16V
C55	NCB31CK-473X	CER.CAPACITOR	0.047 16V
C56	NCB31CK-473X	CER.CAPACITOR	0.047 16V
C57	NBE41CM-106X	TAN.CAPACITOR	10 16V
C58	NCB31EK-473X	CER.CAPACITOR	0.047 25V
C59	NBE41CM-106X	TAN.CAPACITOR	10 16V
C60	NCB31CK-473X	CER.CAPACITOR	0.047 16V
C61	NCB31CK-473X	CER.CAPACITOR	0.047 16V
C62	NCB31CK-473X	CER.CAPACITOR	0.047 16V
C63	NBE41CM-106X	TAN.CAPACITOR	10 16V
C64	NCB31CK-473X	CER.CAPACITOR	0.047 16V
C65	NCB31CK-473X	CER.CAPACITOR	0.047 16V
C66	NDC31HJ-121X	CER.CAPACITOR	120p 50V
C67	NBE21AM-106X	TAN.CAPACITOR	10 10V
LC2	SCV1804-222Z	LC FILTER	
CN11	QGF0508C1-20W	CONNECTOR	20PIN
CN12	QGF0508C1-20W	CONNECTOR	20PIN
CN13	QGF0508C1-20W	CONNECTOR	20PIN
CN14	QGF0508F1-24X	CONNECTOR	24PIN
CN100	QGA1201F2-06X	CONNECTOR	6PIN
K1	NRSA63D-560X	M.G.RESISTOR	56 1/16W
K2	NRSA63D-560X	M.G.RESISTOR	56 1/16W
K3	NRSA63D-100X	M.G.RESISTOR	10 1/16W
K4	NRSA63D-560X	M.G.RESISTOR	56 1/16W
K5	NRSA63D-270X	M.G.RESISTOR	27 1/16W
K6	NRSA63D-270X	M.G.RESISTOR	27 1/16W
K7	NRSA63D-270X	M.G.RESISTOR	27 1/16W
K8	NRSA63J-0R0X	M.G.RESISTOR	0 1/16W
K9	NRSA63D-560X	M.G.RESISTOR	56 1/16W
K10	NRSA63D-560X	M.G.RESISTOR	56 1/16W
K11	NRSA63J-0R0X	M.G.RESISTOR	0 1/16W
K12	NRSA63J-0R0X	M.G.RESISTOR	0 1/16W
K13	NRSA63J-0R0X	M.G.RESISTOR	0 1/16W
K14	NRSA63J-0R0X	M.G.RESISTOR	0 1/16W
K15	NRSA63J-0R0X	M.G.RESISTOR	0 1/16W
K16	NRSA63J-0R0X	M.G.RESISTOR	0 1/16W

Symbol No.	Part No.	Part Name	Description
K17	NRSA63J-0R0X	M.G.RESISTOR	0 1/16W
K18	NRSA63J-0R0X	M.G.RESISTOR	0 1/16W
K19	NRSA63J-0R0X	M.G.RESISTOR	0 1/16W
K20	NQR0351-001X	FERRITE BEADS	
K21	NQR0351-001X	FERRITE BEADS	
K22	NQR0351-001X	FERRITE BEADS	
K23	NQR0351-001X	FERRITE BEADS	
K24	NRSA63J-0R0X	M.G.RESISTOR	0 1/16W
K25	NQR0351-001X	FERRITE BEADS	
K26	NRSA63J-0R0X	M.G.RESISTOR	0 1/16W
K27	NQR0351-001X	FERRITE BEADS	
K28	NRSA63J-0R0X	M.G.RESISTOR	0 1/16W
K29	NQR0351-001X	FERRITE BEADS	
K30	NQR0351-001X	FERRITE BEADS	
K31	NQR0351-001X	FERRITE BEADS	
K32	NQR0351-001X	FERRITE BEADS	
K33	NRSA63J-0R0X	M.G.RESISTOR	0 1/16W
TB1	PGZ02228	EARTH LUG	TB1-4

6.10 CAM BOARD ASSEMBLY PARTS LIST [1][5]

CK2634U0A1(U)

CK2634E0A1(E) [1][5]□□□□□□

Symbol No.	Part No.	Part Name	Description
IC412	AD8031ART-X	I.C.(M)	ANALOG DEVICES
IC413	AD603AR-X	I.C.(M)	ANALOG DEVICES
IC415	AD8031ART-X	I.C.(M)	ANALOG DEVICES
IC421	LMC6082IM-X	I.C.(M)	NATIONAL SEMICO
IC424	NJM062V-X	I.C.(M)	JRC
IC429	NJM062V-X	I.C.(M)	JRC
IC433	TC4W66FU-X	I.C.(M)	TOSHIBA
IC511	TC74HC4053AFT-X	I.C.(M)	TOSHIBA
IC512	AD8031ART-X	I.C.(M)	ANALOG DEVICES
IC513	AD603AR-X	I.C.(M)	ANALOG DEVICES
IC515	AD8031ART-X	I.C.(M)	ANALOG DEVICES
IC516	TC74HC4053AFT-X	I.C.(M)	TOSHIBA
IC521	LMC6082IM-X	I.C.(M)	NATIONAL SEMICO
IC524	NJM062V-X	I.C.(M)	JRC
IC525	TC4W66FU-X	I.C.(M)	TOSHIBA
IC526	MB88345PF	I.C.(M)	FUJITSU
IC527	TC7W74FU-X	I.C.(M)	TOSHIBA
IC529	NJM062V-X	I.C.(M)	JRC
IC531	TC7SH08FU-X	I.C.(M)	TOSHIBA
IC533	TC4W66FU-X	I.C.(M)	TOSHIBA
IC534	TC4S81F-X	I.C.(M)	TOSHIBA
IC535	TC4S81F-X	I.C.(M)	TOSHIBA
IC536	LP2986IMM-X	I.C.(M)	NATIONAL SEMICO
IC537	TC4S81F-X	I.C.(M)	TOSHIBA
IC612	AD8031ART-X	I.C.(M)	ANALOG DEVICES
IC613	AD603AR-X	I.C.(M)	ANALOG DEVICES
IC615	AD8031ART-X	I.C.(M)	ANALOG DEVICES
IC621	LMC6082IM-X	I.C.(M)	NATIONAL SEMICO
IC624	NJM062V-X	I.C.(M)	JRC
IC625	TC4S66F-X	I.C.(M)	TOSHIBA
IC629	NJM062V-X	I.C.(M)	JRC
IC633	TC4W66FU-X	I.C.(M)	TOSHIBA
Q401	3SK157/4-6/-W	FET	NEC
Q411	2SA1790/BC/-X	TRANSISTOR	MATSUSHITA
Q412	2SA1790/BC/-X	TRANSISTOR	MATSUSHITA
Q415	2SA1790/BC/-X	TRANSISTOR	MATSUSHITA
Q501	3SK157/4-6/-W	FET	NEC
Q511	2SA1790/BC/-X	TRANSISTOR	MATSUSHITA
Q512	2SA1790/BC/-X	TRANSISTOR	MATSUSHITA
Q513	2SC4626/BC/-X	TRANSISTOR	MATSUSHITA
Q514	DTA124EUA-X	TRANSISTOR	ROHM
Q515	2SA1790/BC/-X	TRANSISTOR	MATSUSHITA
Q601	3SK157/4-6/-W	FET	NEC
Q611	2SA1790/BC/-X	TRANSISTOR	MATSUSHITA
Q612	2SA1790/BC/-X	TRANSISTOR	MATSUSHITA
Q615	2SA1790/BC/-X	TRANSISTOR	MATSUSHITA
D402	MA742-X	DIODE	MATSUSHITA
D502	MA742-X	DIODE	MATSUSHITA
D602	MA742-X	DIODE	MATSUSHITA
R400	NRSA63D-222X	M.G.RESISTOR	2.2k 1/16W
R401	NRSA63D-220X	M.G.RESISTOR	22 1/16W
R402	NRSA63D-473X	M.G.RESISTOR	47k 1/16W
R403	NRSA63J-0R0X	M.G.RESISTOR	0 1/16W
R405	NRSA63D-471X	M.G.RESISTOR	470 1/16W
R413	NRSA63D-332X	M.G.RESISTOR	3.3k 1/16W
R414	NRSA63D-222X	M.G.RESISTOR	2.2k 1/16W
R431	NRSA63D-102X	M.G.RESISTOR	1k 1/16W
R432	NRSA63D-331X	M.G.RESISTOR	330 1/16W
R433	NRSA63D-331X	M.G.RESISTOR	330 1/16W
R434	NRSA63D-331X	M.G.RESISTOR	330 1/16W
R435	NRSA63D-102X	M.G.RESISTOR	1k 1/16W
R436	NRSA63D-102X	M.G.RESISTOR	1k 1/16W
R437	NRSA63D-102X	M.G.RESISTOR	1k 1/16W
R438	NRSA63D-102X	M.G.RESISTOR	1k 1/16W
R441	NRSA63J-0R0X	M.G.RESISTOR	0 1/16W
R442	NRSA63D-182X	M.G.RESISTOR	1.8k 1/16W
R443	NRSA63J-105X	M.G.RESISTOR	1M 1/16W
R445	NRSA63D-102X	M.G.RESISTOR	1k 1/16W
R447	NRSA63D-112X	M.G.RESISTOR	1.1k 1/16W

Symbol No.	Part No.	Part Name	Description
R448	NRSA63D-151X	M.G.RESISTOR	150 1/16W
R449	NRSA63D-680X	M.G.RESISTOR	68 1/16W
R450	NRSA63D-821X	M.G.RESISTOR	820 1/16W
R451	NRSA63J-0R0X	M.G.RESISTOR	0 1/16W
R452	NRSA63J-0R0X	M.G.RESISTOR	0 1/16W
R457	NRSA63D-561X	M.G.RESISTOR	560 1/16W
R458	NRSA63D-103X	M.G.RESISTOR	10k 1/16W
R461	NRSA63D-473X	M.G.RESISTOR	47k 1/16W
R462	NRSA63D-473X	M.G.RESISTOR	47k 1/16W
R463	NRSA63D-102X	M.G.RESISTOR	1k 1/16W
R464	NRSA63D-473X	M.G.RESISTOR	47k 1/16W
R465	NRSA63D-113X	M.G.RESISTOR	11k 1/16W
R466	NRSA63D-183X	M.G.RESISTOR	18k 1/16W
R467	NRSA63D-183X	M.G.RESISTOR	18k 1/16W
R468	NRSA63D-183X	M.G.RESISTOR	18k 1/16W
R469	NRSA63D-153X	M.G.RESISTOR	15k 1/16W
R470	NRSA63D-683X	M.G.RESISTOR	68k 1/16W
R471	NRSA63D-113X	M.G.RESISTOR	11k 1/16W
R478	NRSA63D-103X	M.G.RESISTOR	10k 1/16W
R479	NRSA63D-221X	M.G.RESISTOR	220 1/16W
R480	NRSA63D-103X	M.G.RESISTOR	10k 1/16W
R484	NRSA63D-183X	M.G.RESISTOR	18k 1/16W
R485	NRSA63D-363X	M.G.RESISTOR	36k 1/16W
R486	NRSA63D-184X	M.G.RESISTOR	180k 1/16W (U)
	NRSA63D-224X	M.G.RESISTOR	220k 1/16W (E)
R487	NRSA63D-104X	M.G.RESISTOR	100k 1/16W
R488	NRSA63D-104X	M.G.RESISTOR	100k 1/16W
R489	NRSA63D-102X	M.G.RESISTOR	1k 1/16W
R490	NRSA63D-821X	M.G.RESISTOR	820 1/16W
R491	NRSA63D-821X	M.G.RESISTOR	820 1/16W
R492	NRSA63D-562X	M.G.RESISTOR	5.6k 1/16W
R493	NRSA63D-752X	M.G.RESISTOR	7.5k 1/16W
R494	NRSA63D-243X	M.G.RESISTOR	24k 1/16W
R495	NRSA63D-103X	M.G.RESISTOR	10k 1/16W
R496	NRSA63D-822X	M.G.RESISTOR	8.2k 1/16W
R497	NRSA63D-224X	M.G.RESISTOR	220k 1/16W
R498	NRSA63D-102X	M.G.RESISTOR	1k 1/16W
R499	NRSA63D-101X	M.G.RESISTOR	100 1/16W
R500	NRSA63D-222X	M.G.RESISTOR	2.2k 1/16W
R501	NRSA63D-220X	M.G.RESISTOR	22 1/16W
R502	NRSA63D-473X	M.G.RESISTOR	47k 1/16W
R503	NRSA63D-102X	M.G.RESISTOR	1k 1/16W
R504	NRSA63D-334X	M.G.RESISTOR	330k 1/16W
R505	NRSA63D-471X	M.G.RESISTOR	470 1/16W
R506	NRSA63D-682X	M.G.RESISTOR	6.8k 1/16W
R507	NRSA63D-513X	M.G.RESISTOR	51k 1/16W
R508	NRSA63D-154X	M.G.RESISTOR	150k 1/16W
R509	NRSA63D-223X	M.G.RESISTOR	22k 1/16W
R510	NRSA63D-473X	M.G.RESISTOR	47k 1/16W
R511	NRSA63D-223X	M.G.RESISTOR	22k 1/16W
R512	NRSA63D-223X	M.G.RESISTOR	22k 1/16W
R513	NRSA63D-332X	M.G.RESISTOR	3.3k 1/16W
R514	NRSA63D-222X	M.G.RESISTOR	2.2k 1/16W
R531	NRSA63D-102X	M.G.RESISTOR	1k 1/16W
R532	NRSA63D-331X	M.G.RESISTOR	330 1/16W
R533	NRSA63D-331X	M.G.RESISTOR	330 1/16W
R534	NRSA63D-331X	M.G.RESISTOR	330 1/16W
R535	NRSA63D-102X	M.G.RESISTOR	1k 1/16W
R536	NRSA63D-102X	M.G.RESISTOR	1k 1/16W
R537	NRSA63D-102X	M.G.RESISTOR	1k 1/16W
R538	NRSA63D-102X	M.G.RESISTOR	1k 1/16W
R541	NRSA63J-0R0X	M.G.RESISTOR	0 1/16W
R542	NRSA63D-391X	M.G.RESISTOR	390 1/16W
R544	NRSA63J-105X	M.G.RESISTOR	1M 1/16W
R545	NRSA63D-102X	M.G.RESISTOR	1k 1/16W
R547	NRSA63D-112X	M.G.RESISTOR	1.1k 1/16W
R548	NRSA63D-151X	M.G.RESISTOR	150 1/16W
R549	NRSA63D-680X	M.G.RESISTOR	68 1/16W
R550	NRSA63D-821X	M.G.RESISTOR	820 1/16W
R551	NRSA63J-0R0X	M.G.RESISTOR	0 1/16W
R552	NRSA63J-0R0X	M.G.RESISTOR	0 1/16W
R557	NRSA63D-561X	M.G.RESISTOR	560 1/16W
R558	NRSA63D-103X	M.G.RESISTOR	10k 1/16W

[CAM]

Symbol No.	Part No.	Part Name	Description	
R559	NRSA63D-102X	M.G.RESISTOR	1k	1/16W
R560	NRSA63D-104X	M.G.RESISTOR	100k	1/16W
R561	NRSA63D-473X	M.G.RESISTOR	47k	1/16W
R562	NRSA63D-473X	M.G.RESISTOR	47k	1/16W
R563	NRSA63D-102X	M.G.RESISTOR	1k	1/16W
R564	NRSA63D-473X	M.G.RESISTOR	47k	1/16W
R565	NRSA63D-113X	M.G.RESISTOR	11k	1/16W
R567	NRSA63D-183X	M.G.RESISTOR	18k	1/16W
R568	NRSA63D-183X	M.G.RESISTOR	18k	1/16W
R569	NRSA63D-223X	M.G.RESISTOR	22k	1/16W
R570	NRSA63D-154X	M.G.RESISTOR	150k	1/16W
R571	NRSA63D-113X	M.G.RESISTOR	11k	1/16W
R573	NRSA63D-102X	M.G.RESISTOR	1k	1/16W
R576	NRSA63D-562X	M.G.RESISTOR	5.6k	1/16W
R578	NRSA63D-103X	M.G.RESISTOR	10k	1/16W
R579	NRSA63D-221X	M.G.RESISTOR	220	1/16W
R580	NRSA63D-103X	M.G.RESISTOR	10k	1/16W
R581	NRSA63D-103X	M.G.RESISTOR	10k	1/16W
R582	NRSA63D-392X	M.G.RESISTOR	3.9k	1/16W
R583	NRSA63D-363X	M.G.RESISTOR	36k	1/16W
R584	NRSA63D-183X	M.G.RESISTOR	18k	1/16W
R585	NRSA63D-363X	M.G.RESISTOR	36k	1/16W
R586	NRSA63D-184X	M.G.RESISTOR	180k	1/16W (U)
	NRSA63D-224X	M.G.RESISTOR	220k	1/16W (E)
R587	NRSA63D-104X	M.G.RESISTOR	100k	1/16W
R588	NRSA63D-104X	M.G.RESISTOR	100k	1/16W
R589	NRSA63D-102X	M.G.RESISTOR	1k	1/16W
R590	NRSA63D-821X	M.G.RESISTOR	820	1/16W
R591	NRSA63D-821X	M.G.RESISTOR	820	1/16W
R592	NRSA63D-562X	M.G.RESISTOR	5.6k	1/16W
R593	NRSA63D-752X	M.G.RESISTOR	7.5k	1/16W
R594	NRSA63D-393X	M.G.RESISTOR	39k	1/16W
R596	NRSA63D-183X	M.G.RESISTOR	18k	1/16W
R597	NRSA63D-124X	M.G.RESISTOR	120k	1/16W
R598	NRSA63D-102X	M.G.RESISTOR	1k	1/16W
R599	NRSA63D-101X	M.G.RESISTOR	100	1/16W
R600	NRSA63D-222X	M.G.RESISTOR	2.2k	1/16W
R601	NRSA63D-220X	M.G.RESISTOR	22	1/16W
R602	NRSA63D-473X	M.G.RESISTOR	47k	1/16W
R605	NRSA63D-471X	M.G.RESISTOR	470	1/16W
R613	NRSA63D-332X	M.G.RESISTOR	3.3k	1/16W
R614	NRSA63D-222X	M.G.RESISTOR	2.2k	1/16W
R631	NRSA63D-102X	M.G.RESISTOR	1k	1/16W
R632	NRSA63D-331X	M.G.RESISTOR	330	1/16W
R633	NRSA63D-331X	M.G.RESISTOR	330	1/16W
R634	NRSA63D-331X	M.G.RESISTOR	330	1/16W
R635	NRSA63D-102X	M.G.RESISTOR	1k	1/16W
R636	NRSA63D-102X	M.G.RESISTOR	1k	1/16W
R637	NRSA63D-102X	M.G.RESISTOR	1k	1/16W
R638	NRSA63D-102X	M.G.RESISTOR	1k	1/16W
R641	NRSA63J-0R0X	M.G.RESISTOR	0	1/16W
R642	NRSA63D-681X	M.G.RESISTOR	680	1/16W
R644	NRSA63J-105X	M.G.RESISTOR	1M	1/16W
R645	NRSA63D-102X	M.G.RESISTOR	1k	1/16W
R647	NRSA63D-112X	M.G.RESISTOR	1.1k	1/16W
R648	NRSA63D-151X	M.G.RESISTOR	150	1/16W
R649	NRSA63D-680X	M.G.RESISTOR	68	1/16W
R650	NRSA63D-821X	M.G.RESISTOR	820	1/16W
R651	NRSA63J-0R0X	M.G.RESISTOR	0	1/16W
R652	NRSA63J-0R0X	M.G.RESISTOR	0	1/16W
R657	NRSA63D-561X	M.G.RESISTOR	560	1/16W
R658	NRSA63D-103X	M.G.RESISTOR	10k	1/16W
R661	NRSA63D-473X	M.G.RESISTOR	47k	1/16W
R662	NRSA63D-473X	M.G.RESISTOR	47k	1/16W
R663	NRSA63D-102X	M.G.RESISTOR	1k	1/16W
R664	NRSA63D-473X	M.G.RESISTOR	47k	1/16W
R665	NRSA63D-113X	M.G.RESISTOR	11k	1/16W
R666	NRSA63D-183X	M.G.RESISTOR	18k	1/16W
R667	NRSA63D-183X	M.G.RESISTOR	18k	1/16W
R668	NRSA63D-183X	M.G.RESISTOR	18k	1/16W
R669	NRSA63D-153X	M.G.RESISTOR	15k	1/16W
R670	NRSA63D-683X	M.G.RESISTOR	68k	1/16W
R671	NRSA63D-113X	M.G.RESISTOR	11k	1/16W

Symbol No.	Part No.	Part Name	Description	
R678	NRSA63D-103X	M.G.RESISTOR	10k	1/16W
R679	NRSA63D-221X	M.G.RESISTOR	220	1/16W
R680	NRSA63D-103X	M.G.RESISTOR	10k	1/16W
R684	NRSA63D-183X	M.G.RESISTOR	18k	1/16W
R685	NRSA63D-363X	M.G.RESISTOR	36k	1/16W
R686	NRSA63D-184X	M.G.RESISTOR	180k	1/16W (U)
	NRSA63D-224X	M.G.RESISTOR	220k	1/16W (E)
R687	NRSA63D-104X	M.G.RESISTOR	100k	1/16W
R688	NRSA63D-104X	M.G.RESISTOR	100k	1/16W
R689	NRSA63D-102X	M.G.RESISTOR	1k	1/16W
R690	NRSA63D-821X	M.G.RESISTOR	820	1/16W
R691	NRSA63D-821X	M.G.RESISTOR	820	1/16W
R692	NRSA63D-562X	M.G.RESISTOR	5.6k	1/16W
R693	NRSA63D-752X	M.G.RESISTOR	7.5k	1/16W
R694	NRSA63D-183X	M.G.RESISTOR	18k	1/16W
R695	NRSA63D-183X	M.G.RESISTOR	18k	1/16W
R696	NRSA63D-103X	M.G.RESISTOR	10k	1/16W
R698	NRSA63D-102X	M.G.RESISTOR	1k	1/16W
R699	NRSA63D-101X	M.G.RESISTOR	100	1/16W
C435	NDC31HJ-220X	CER.CAPACITOR	22p	50V
C436	NDC31HJ-220X	CER.CAPACITOR	22p	50V
C437	NDC31HJ-820X	CER.CAPACITOR	82p	50V
C440	NDC31HJ-820X	CER.CAPACITOR	82p	50V
C451	NCB31EK-472X	CER.CAPACITOR	4700p	25V
C452	NCB31EK-472X	CER.CAPACITOR	4700p	25V
C453	NCB30JK-474X	CER.CAPACITOR	0.47	6.3V
C454	NCB11CK-105X	CER.CAPACITOR	1	16V
C456	NCB31CK-473X	CER.CAPACITOR	0.047	16V
C461	NCB31CK-473X	CER.CAPACITOR	0.047	16V
C462	NCB31CK-473X	CER.CAPACITOR	0.047	16V
C463	NCB31CK-473X	CER.CAPACITOR	0.047	16V
C464	NCB31CK-473X	CER.CAPACITOR	0.047	16V
C465	NCB31CK-473X	CER.CAPACITOR	0.047	16V
C466	NCB31CK-473X	CER.CAPACITOR	0.047	16V
C480	NCB31HK-222X	CER.CAPACITOR	2200p	50V
C481	NBE41CM-106X	TAN.CAPACITOR	10	16V
C482	NBE51EM-106X	TAN.CAPACITOR	10	25V
C483	NCB31CK-473X	CER.CAPACITOR	0.047	16V
C485	NCB31CK-473X	CER.CAPACITOR	0.047	16V
C486	NCB31CK-473X	CER.CAPACITOR	0.047	16V
C535	NDC31HJ-220X	CER.CAPACITOR	22p	50V
C536	NDC31HJ-220X	CER.CAPACITOR	22p	50V
C537	NDC31HJ-820X	CER.CAPACITOR	82p	50V
C538	NCB31EK-103X	CER.CAPACITOR	0.01	25V
C540	NDC31HJ-820X	CER.CAPACITOR	82p	50V
C551	NCB31EK-472X	CER.CAPACITOR	4700p	25V
C552	NCB31EK-472X	CER.CAPACITOR	4700p	25V
C553	NCB30JK-474X	CER.CAPACITOR	0.47	6.3V
C554	NCB11CK-105X	CER.CAPACITOR	1	16V
C556	NCB31CK-473X	CER.CAPACITOR	0.047	16V
C557	NCB31CK-473X	CER.CAPACITOR	0.047	16V
C558	NDC31HJ-680X	CER.CAPACITOR	68p	50V
C561	NCB31CK-473X	CER.CAPACITOR	0.047	16V
C562	NCB31CK-473X	CER.CAPACITOR	0.047	16V
C563	NCB31CK-473X	CER.CAPACITOR	0.047	16V
C564	NCB31CK-473X	CER.CAPACITOR	0.047	16V
C565	NCB31CK-473X	CER.CAPACITOR	0.047	16V
C566	NCB31CK-473X	CER.CAPACITOR	0.047	16V
C569	NCB31CK-473X	CER.CAPACITOR	0.047	16V
C571	NBE71CM-476X	TAN.CAPACITOR	47	16V
C572	NBE71CM-476X	TAN.CAPACITOR	47	16V
C574	NBE21AM-106X	TAN.CAPACITOR	10	10V
C575	NCB11AK-225X	CER.CAPACITOR	2.2	10V
C576	NBE51EM-106X	TAN.CAPACITOR	10	25V
C577	NCB31CK-473X	CER.CAPACITOR	0.047	16V
C578	NDC31HJ-220X	CER.CAPACITOR	22p	50V
C580	NCB31HK-222X	CER.CAPACITOR	2200p	50V
C581	NBE41CM-106X	TAN.CAPACITOR	10	16V
C582	NBE51EM-106X	TAN.CAPACITOR	10	25V
C583	NCB31CK-473X	CER.CAPACITOR	0.047	16V
C584	NCB31CK-473X	CER.CAPACITOR	0.047	16V
C585	NCB31CK-473X	CER.CAPACITOR	0.047	16V

6.11 SE BOARD ASSEMBLY PARTS LIST 1 6

CK2634U0D2(U)

CK2634E0D2(E)

1 6

Symbol No.	Part No.	Part Name	Description	
C586	NCB31CK-473X	CER.CAPACITOR	0.047	16V
C587	NCB31CK-473X	CER.CAPACITOR	0.047	16V
C588	NCB31CK-473X	CER.CAPACITOR	0.047	16V
C589	NCB31CK-473X	CER.CAPACITOR	0.047	16V
C590	NCB31CK-473X	CER.CAPACITOR	0.047	16V
C635	NDC31HJ-220X	CER.CAPACITOR	22p	50V
C636	NDC31HJ-220X	CER.CAPACITOR	22p	50V
C637	NDC31HJ-820X	CER.CAPACITOR	82p	50V
C640	NDC31HJ-820X	CER.CAPACITOR	82p	50V
C651	NCB31EK-472X	CER.CAPACITOR	4700p	25V
C652	NCB31EK-472X	CER.CAPACITOR	4700p	25V
C653	NCB30JK-474X	CER.CAPACITOR	0.47	6.3V
C654	NCB11CK-105X	CER.CAPACITOR	1	16V
C656	NCB31CK-473X	CER.CAPACITOR	0.047	16V
C661	NCB31CK-473X	CER.CAPACITOR	0.047	16V
C662	NCB31CK-473X	CER.CAPACITOR	0.047	16V
C663	NCB31CK-473X	CER.CAPACITOR	0.047	16V
C664	NCB31CK-473X	CER.CAPACITOR	0.047	16V
C665	NCB31CK-473X	CER.CAPACITOR	0.047	16V
C666	NCB31CK-473X	CER.CAPACITOR	0.047	16V
C680	NCB31HK-222X	CER.CAPACITOR	2200p	50V
C681	NBE41CM-106X	TAN.CAPACITOR	10	16V
C682	NBE51EM-106X	TAN.CAPACITOR	10	25V
C683	NCB31CK-473X	CER.CAPACITOR	0.047	16V
C685	NCB31CK-473X	CER.CAPACITOR	0.047	16V
C686	NCB31CK-473X	CER.CAPACITOR	0.047	16V
L404	NQL054K-330X	COIL	33uH	
L504	NQL054K-330X	COIL	33uH	
L604	NQL054K-330X	COIL	33uH	
LC401	SCV1859-001	LC FILTER		
LC501	SCV1859-001	LC FILTER		
LC601	SCV1859-001	LC FILTER		
CN14	QGF0508F2-24X	CONNECTOR	24PIN	
CN21	QGF0508F1-30X	CONNECTOR	30PIN	
TP401	NNZ0022-001X	TEST POINT	TP401,501,601	
TP402	NNZ0009-001X	TEST POINT	TP402-603	
FL401	NQR0122-001X	FL FILTER		
FL402	NQR0122-001X	FL FILTER		
FL501	NQR0122-001X	FL FILTER		
FL502	NQR0122-001X	FL FILTER		
FL601	NQR0122-001X	FL FILTER		
FL602	NQR0122-001X	FL FILTER		
K501	NQR0351-001X	FERRITE BEADS	K501-509	
TB501	PGZ02228	EARTH LUG	TB501,502	

Symbol No.	Part No.	Part Name	Description	
IC1	JCS0027	I.C.(M)	JVC	
IC2	EPM064ST-10-012	I.C.(M)	ALTERA	(U)
	EPM064ST-10-013	I.C.(M)	ALTERA	(E)
IC3	NJM78L15UA-X	I.C.(M)	JRC	
IC4	LP2986IMM-X	I.C.(M)	NATIONAL SEMICO	
IC5	DS90LV017M-X	I.C.(M)	NATIONAL SEMICO	
IC6	TC7WT125FU-X	I.C.(M)	TOSHIBA	
IC7	TC74VHC541FT-X	I.C.(M)	TOSHIBA	
IC8	TC7WH126FU-X	I.C.(M)	TOSHIBA	
IC9	M62353GP-X	I.C.(M)	MITSUBISHI	
IC10	TC7SU04FU-X	I.C.(M)	TOSHIBA	
IC11	UPD6461GS-913	I.C.(M)	NEC	
IC12	UPC812G2-X	I.C.(M)	NEC	
IC13	TC74HC4538AF-X	I.C.(M)	TOSHIBA	
IC14	CLC450AJM5-X	I.C.(M)	NATIONAL SEMICO	
IC15	TC4W53FU-X	I.C.(M)	TOSHIBA	
IC16	LM1881M-X	I.C.(M)	NATIONAL SEMICO	
IC17	TC7SU04FU-X	I.C.(M)	TOSHIBA	
IC18	TC4W53FU-X	I.C.(M)	TOSHIBA	
IC19	TC7SH00FU-X	I.C.(M)	TOSHIBA	
IC20	TC7SH08FU-X	I.C.(M)	TOSHIBA	(U)
IC21	TC4S11F-X	I.C.(M)	TOSHIBA	
IC22	TC7SH08FU-X	I.C.(M)	TOSHIBA	(U)
IC24	TC7S02FU-X	I.C.(M)	TOSHIBA	
IC201	CLC450AJM5-X	I.C.(M)	NATIONAL SEMICO	
IC204	CLC450AJM5-X	I.C.(M)	NATIONAL SEMICO	
IC205	CLC450AJM5-X	I.C.(M)	NATIONAL SEMICO	
IC208	AD8031ART-X	I.C.(M)	ANALOG DEVICES	
IC210	CLC450AJM5-X	I.C.(M)	NATIONAL SEMICO	
IC213	TC74HC4052AFT-X	I.C.(M)	TOSHIBA	
IC301	CLC450AJM5-X	I.C.(M)	NATIONAL SEMICO	
IC303	NJM062V-X	I.C.(M)	JRC	
IC304	AD8031ART-X	I.C.(M)	ANALOG DEVICES	
IC305	CLC450AJM5-X	I.C.(M)	NATIONAL SEMICO	
IC307	TC4W53FU-X	I.C.(M)	TOSHIBA	(E)
IC308	NJM1496V-X	I.C.(M)	JRC	
IC401	CLC450AJM5-X	I.C.(M)	NATIONAL SEMICO	
IC402	TC7SH04FU-X	I.C.(M)	TOSHIBA	(E)
IC404	AD8031ART-X	I.C.(M)	ANALOG DEVICES	
IC405	CLC450AJM5-X	I.C.(M)	NATIONAL SEMICO	
IC407	TC4W53FU-X	I.C.(M)	TOSHIBA	(E)
IC408	NJM1496V-X	I.C.(M)	JRC	
IC409	CLC450AJM5-X	I.C.(M)	NATIONAL SEMICO	
IC410	CLC450AJM5-X	I.C.(M)	NATIONAL SEMICO	
IC411	AD8031ART-X	I.C.(M)	ANALOG DEVICES	
IC413	TC74HC4052AFT-X	I.C.(M)	TOSHIBA	
IC501	AD8031ART-X	I.C.(M)	ANALOG DEVICES	
IC502	NJM062V-X	I.C.(M)	JRC	
IC503	AD8031ART-X	I.C.(M)	ANALOG DEVICES	
IC505	TC4W53FU-X	I.C.(M)	TOSHIBA	
IC506	TC4W53FU-X	I.C.(M)	TOSHIBA	
IC508	AD8031ART-X	I.C.(M)	ANALOG DEVICES	
IC510	TC7SH08FU-X	I.C.(M)	TOSHIBA	
IC514	TC4W53FU-X	I.C.(M)	TOSHIBA	
IC515	TC7SH08FU-X	I.C.(M)	TOSHIBA	
IC516	TC7SH32FU-X	I.C.(M)	TOSHIBA	
IC517	TC4W53FU-X	I.C.(M)	TOSHIBA	
IC518	TC4W53FU-X	I.C.(M)	TOSHIBA	
IC520	AD8031ART-X	I.C.(M)	ANALOG DEVICES	
Q1	DTA124EUA-X	TRANSISTOR	ROHM	
Q2	DTA124EUA-X	TRANSISTOR	ROHM	
Q3	DTA124EUA-X	TRANSISTOR	ROHM	
Q4	2SC4626/BC/-X	TRANSISTOR	MATSUSHITA	
Q5	2SA1790/BC/-X	TRANSISTOR	MATSUSHITA	
Q6	2SA1790/BC/-X	TRANSISTOR	MATSUSHITA	
Q7	DTC124EUA-X	TRANSISTOR	ROHM	(U)
Q8	DTA124EUA-X	TRANSISTOR	ROHM	(U)
Q9	2SC4626/BC/-X	TRANSISTOR	MATSUSHITA	
Q10	2SC4626/BC/-X	TRANSISTOR	MATSUSHITA	(U)
Q11	2SA1790/BC/-X	TRANSISTOR	MATSUSHITA	
Q12	2SA1790/BC/-X	TRANSISTOR	MATSUSHITA	
Q13	2SA1790/BC/-X	TRANSISTOR	MATSUSHITA	

[SE]

Symbol No.	Part No.	Part Name	Description	
Q14	2SA1790/BC/-X	TRANSISTOR	MATSUSHITA	
Q15	2SC4626/BC/-X	TRANSISTOR	MATSUSHITA	(U)
Q16	2SC4626/BC/-X	TRANSISTOR	MATSUSHITA	
Q17	2SC4626/BC/-X	TRANSISTOR	MATSUSHITA	(U)
Q18	2SC4626/BC/-X	TRANSISTOR	MATSUSHITA	
Q19	2SC4626/BC/-X	TRANSISTOR	MATSUSHITA	
Q20	2SC4626/BC/-X	TRANSISTOR	MATSUSHITA	
Q21	2SC4626/BC/-X	TRANSISTOR	MATSUSHITA	
Q22	2SC4626/BC/-X	TRANSISTOR	MATSUSHITA	
Q23	2SA1790/BC/-X	TRANSISTOR	MATSUSHITA	
Q24	2SA1790/BC/-X	TRANSISTOR	MATSUSHITA	
Q25	2SC4626/BC/-X	TRANSISTOR	MATSUSHITA	
Q26	2SC4626/BC/-X	TRANSISTOR	MATSUSHITA	
Q27	2SC4626/BC/-X	TRANSISTOR	MATSUSHITA	
Q28	2SC4626/BC/-X	TRANSISTOR	MATSUSHITA	
Q206	2SA1790/BC/-X	TRANSISTOR	MATSUSHITA	
Q207	2SC4626/BC/-X	TRANSISTOR	MATSUSHITA	
Q302	2SK663/QR/-X	FET	MATSUSHITA	(U)
Q303	2SA1790/BC/-X	TRANSISTOR	MATSUSHITA	
Q304	2SC4626/BC/-X	TRANSISTOR	MATSUSHITA	
Q305	2SK663/QR/-X	FET	MATSUSHITA	
Q306	2SA1790/BC/-X	TRANSISTOR	MATSUSHITA	
Q307	2SC4626/BC/-X	TRANSISTOR	MATSUSHITA	
Q402	2SK663/QR/-X	FET	MATSUSHITA	(U)
Q403	2SA1790/BC/-X	TRANSISTOR	MATSUSHITA	
Q404	2SC4626/BC/-X	TRANSISTOR	MATSUSHITA	
Q405	2SK663/QR/-X	FET	MATSUSHITA	
Q406	2SA1790/BC/-X	TRANSISTOR	MATSUSHITA	
Q407	2SC4626/BC/-X	TRANSISTOR	MATSUSHITA	
Q501	2SC4626/BC/-X	TRANSISTOR	MATSUSHITA	
Q502	2SC4626/BC/-X	TRANSISTOR	MATSUSHITA	
Q503	2SK663/QR/-X	FET	MATSUSHITA	
Q505	2SC4626/BC/-X	TRANSISTOR	MATSUSHITA	
Q506	2SK663/QR/-X	FET	MATSUSHITA	
D1	MA143A-X	DIODE	MATSUSHITA	
D2	MA143A-X	DIODE	MATSUSHITA	
D3	MA143A-X	DIODE	MATSUSHITA	
D4	MA143A-X	DIODE	MATSUSHITA	
D5	HZM6C-X	ZENER DIODE	HITACHI	
D7	MA335-X	DIODE	MATSUSHITA	
D8	MA335-X	DIODE	MATSUSHITA	
D9	MA335-X	DIODE	MATSUSHITA	
D10	MA335-X	DIODE	MATSUSHITA	
D11	MA143A-X	DIODE	MATSUSHITA	
D401	SVC341/L/-X	VARI CAPA DIODE	SANYO	
D402	MA143A-X	DIODE	MATSUSHITA	
D403	MA143A-X	DIODE	MATSUSHITA	
R1	NRSA63D-334X	M.G.RESISTOR	330k	1/16W
R2	NRSA63D-184X	M.G.RESISTOR	180k	1/16W
R3	NRSA63J-125X	M.G.RESISTOR	1.2M	1/16W
R4	NRSA63D-513X	M.G.RESISTOR	51k	1/16W
R5	NRSA63D-101X	M.G.RESISTOR	100	1/16W
R6	NRSA63D-101X	M.G.RESISTOR	100	1/16W
R7	NRSA63D-101X	M.G.RESISTOR	100	1/16W
R8	NRSA63D-101X	M.G.RESISTOR	100	1/16W
R9	NRSA63D-102X	M.G.RESISTOR	1k	1/16W
R10	NRSA63D-102X	M.G.RESISTOR	1k	1/16W
R11	NRSA63D-102X	M.G.RESISTOR	1k	1/16W
R12	NRSA63D-101X	M.G.RESISTOR	100	1/16W
R13	NRSA63D-101X	M.G.RESISTOR	100	1/16W
R14	NRSA63D-101X	M.G.RESISTOR	100	1/16W
R15	NRSA63D-101X	M.G.RESISTOR	100	1/16W
R16	NRSA63J-0R0X	M.G.RESISTOR	0	1/16W (E)
R17	NRSA63J-0R0X	M.G.RESISTOR	0	1/16W (U)
R18	NRSA63D-104X	M.G.RESISTOR	100k	1/16W
R19	NRSA63D-221X	M.G.RESISTOR	220	1/16W
R20	NRSA63D-101X	M.G.RESISTOR	100	1/16W
R21	NRSA63D-104X	M.G.RESISTOR	100k	1/16W
R22	NRSA63D-104X	M.G.RESISTOR	100k	1/16W
R23	NRSA63D-104X	M.G.RESISTOR	100k	1/16W

Symbol No.	Part No.	Part Name	Description	
R24	NRSA63D-101X	M.G.RESISTOR	100	1/16W (U)
	NRSA63D-472X	M.G.RESISTOR	4.7k	1/16W (E)
R25	NRSA63D-333X	M.G.RESISTOR	33k	1/16W (U)
	NRSA63D-223X	M.G.RESISTOR	22k	1/16W (E)
R27	NRSA63D-222X	M.G.RESISTOR	2.2k	1/16W
R28	NRSA63D-273X	M.G.RESISTOR	27k	1/16W
R29	NRSA63D-823X	M.G.RESISTOR	82k	1/16W
R30	NRSA63D-333X	M.G.RESISTOR	33k	1/16W
R31	NRSA63D-104X	M.G.RESISTOR	100k	1/16W
R32	NRSA63D-273X	M.G.RESISTOR	27k	1/16W
R33	NRSA63D-102X	M.G.RESISTOR	1k	1/16W
R34	NRSA63D-122X	M.G.RESISTOR	1.2k	1/16W
R35	NRSA63D-102X	M.G.RESISTOR	1k	1/16W
R36	NRSA63D-222X	M.G.RESISTOR	2.2k	1/16W
R37	NRSA63D-682X	M.G.RESISTOR	6.8k	1/16W
R39	NRSA63D-273X	M.G.RESISTOR	27k	1/16W
R40	NRSA63D-223X	M.G.RESISTOR	22k	1/16W
R41	NRSA63D-564X	M.G.RESISTOR	560k	1/16W
R42	NRSA63D-105X	M.G.RESISTOR	1M	1/16W
R43	NRSA63D-221X	M.G.RESISTOR	220	1/16W
R44	NRSA63D-271X	M.G.RESISTOR	270	1/16W
R45	NRSA63D-104X	M.G.RESISTOR	100k	1/16W
R46	NRSA63D-104X	M.G.RESISTOR	100k	1/16W
R47	NRSA63D-393X	M.G.RESISTOR	39k	1/16W (U)
	NRSA63D-683X	M.G.RESISTOR	68k	1/16W (E)
R48	NRSA63D-333X	M.G.RESISTOR	33k	1/16W
R49	NRSA63D-153X	M.G.RESISTOR	15k	1/16W
R50	NRSA63D-153X	M.G.RESISTOR	15k	1/16W
R51	NRSA63D-333X	M.G.RESISTOR	33k	1/16W
R52	NRSA63D-102X	M.G.RESISTOR	1k	1/16W
R53	NRSA63D-153X	M.G.RESISTOR	15k	1/16W
R54	NRSA63D-182X	M.G.RESISTOR	1.8k	1/16W
R55	NRSA63D-182X	M.G.RESISTOR	1.8k	1/16W
R57	NRSA63D-331X	M.G.RESISTOR	330	1/16W
R58	NRSA63D-182X	M.G.RESISTOR	1.8k	1/16W
R59	NRSA63D-224X	M.G.RESISTOR	220k	1/16W
R60	NRSA63J-0R0X	M.G.RESISTOR	0	1/16W
R61	NRSA63J-0R0X	M.G.RESISTOR	0	1/16W
R62	NRSA63J-0R0X	M.G.RESISTOR	0	1/16W
R63	NRSA63J-0R0X	M.G.RESISTOR	0	1/16W
R64	NRSA63J-0R0X	M.G.RESISTOR	0	1/16W
R65	NRSA63J-0R0X	M.G.RESISTOR	0	1/16W
R66	NRSA63D-104X	M.G.RESISTOR	100k	1/16W
R67	NRSA63D-104X	M.G.RESISTOR	100k	1/16W
R68	NRSA63D-102X	M.G.RESISTOR	1k	1/16W
R69	NRSA63D-102X	M.G.RESISTOR	1k	1/16W
R70	NRSA63J-0R0X	M.G.RESISTOR	0	1/16W
R71	NRSA63D-102X	M.G.RESISTOR	1k	1/16W
R72	NRSA63D-102X	M.G.RESISTOR	1k	1/16W
R73	NRSA63D-102X	M.G.RESISTOR	1k	1/16W
R75	NRSA63D-472X	M.G.RESISTOR	4.7k	1/16W
R76	NRSA63D-472X	M.G.RESISTOR	4.7k	1/16W
R77	NRSA63D-472X	M.G.RESISTOR	4.7k	1/16W
R78	NRSA63D-182X	M.G.RESISTOR	1.8k	1/16W
R79	NRSA63J-0R0X	M.G.RESISTOR	0	1/16W (U)
R80	NRSA63D-472X	M.G.RESISTOR	4.7k	1/16W (U)
R81	NRSA63D-223X	M.G.RESISTOR	22k	1/16W
R82	NRSA63J-0R0X	M.G.RESISTOR	0	1/16W (U)
R83	NRSA63D-101X	M.G.RESISTOR	100	1/16W
R84	NRSA63D-821X	M.G.RESISTOR	820	1/16W
R85	NRSA63D-272X	M.G.RESISTOR	2.7k	1/16W (U)
	NRSA63D-182X	M.G.RESISTOR	1.8k	1/16W (E)
R86	NRSA63D-152X	M.G.RESISTOR	1.5k	1/16W
R87	NRSA63J-0R0X	M.G.RESISTOR	0	1/16W
R88	NRSA63D-104X	M.G.RESISTOR	100k	1/16W
R89	NRSA63D-103X	M.G.RESISTOR	10k	1/16W
R90	NRSA63D-103X	M.G.RESISTOR	10k	1/16W
R91	NRSA63D-103X	M.G.RESISTOR	10k	1/16W
R92	NRSA63D-103X	M.G.RESISTOR	10k	1/16W
R93	NRSA63D-103X	M.G.RESISTOR	10k	1/16W
R94	NRSA63D-103X	M.G.RESISTOR	10k	1/16W
R95	NRSA63D-103X	M.G.RESISTOR	10k	1/16W
R96	NRSA63D-103X	M.G.RESISTOR	10k	1/16W

Symbol No.	Part No.	Part Name	Description	
R98	NRSA63D-103X	M.G.RESISTOR	10k	1/16W
R99	NRSA63D-103X	M.G.RESISTOR	10k	1/16W
R100	NRSA63D-103X	M.G.RESISTOR	10k	1/16W
R102	NRSA63D-103X	M.G.RESISTOR	10k	1/16W
R103	NRSA63D-103X	M.G.RESISTOR	10k	1/16W
R104	NRSA63D-103X	M.G.RESISTOR	10k	1/16W
R105	NRSA63D-103X	M.G.RESISTOR	10k	1/16W
R106	NRSA63D-103X	M.G.RESISTOR	10k	1/16W
R108	NRSA63J-0R0X	M.G.RESISTOR	0	1/16W
R109	NRSA63J-0R0X	M.G.RESISTOR	0	1/16W
R110	NRSA63D-202X	M.G.RESISTOR	2k	1/16W
R111	NRSA63D-823X	M.G.RESISTOR	82k	1/16W (U)
	NRSA63D-223X	M.G.RESISTOR	22k	1/16W (E)
R112	NRSA63D-153X	M.G.RESISTOR	15k	1/16W (U)
R113	NRSA63D-224X	M.G.RESISTOR	220k	1/16W (U)
R114	NRSA63J-0R0X	M.G.RESISTOR	0	1/16W (U)
R119	NRSA63J-0R0X	M.G.RESISTOR	0	1/16W
R120	NRSA63D-102X	M.G.RESISTOR	1k	1/16W
R121	NRSA63D-102X	M.G.RESISTOR	1k	1/16W
R122	NRSA63D-102X	M.G.RESISTOR	1k	1/16W
R123	NRSA63J-0R0X	M.G.RESISTOR	0	1/16W
R124	NRSA63J-0R0X	M.G.RESISTOR	0	1/16W
R125	NRSA63D-103X	M.G.RESISTOR	10k	1/16W
R126	NRSA63D-563X	M.G.RESISTOR	56k	1/16W
R127	NRSA63D-563X	M.G.RESISTOR	56k	1/16W
R128	NRSA63D-103X	M.G.RESISTOR	10k	1/16W
R129	NRSA63D-221X	M.G.RESISTOR	220	1/16W
R130	NRSA63D-272X	M.G.RESISTOR	2.7k	1/16W (U)
R132	NRSA63D-103X	M.G.RESISTOR	10k	1/16W (U)
R133	NRSA63D-333X	M.G.RESISTOR	33k	1/16W (U)
R134	NRSA63D-472X	M.G.RESISTOR	4.7k	1/16W
R135	NRSA63D-221X	M.G.RESISTOR	220	1/16W
R136	NRSA63D-103X	M.G.RESISTOR	10k	1/16W
R137	NRSA63D-472X	M.G.RESISTOR	4.7k	1/16W
R138	NRSA63D-221X	M.G.RESISTOR	220	1/16W
R139	NRSA63D-103X	M.G.RESISTOR	10k	1/16W
R140	NRSA63D-272X	M.G.RESISTOR	2.7k	1/16W (U)
R142	NRSA63D-221X	M.G.RESISTOR	220	1/16W
R143	NRSA63D-333X	M.G.RESISTOR	33k	1/16W (U)
R144	NRSA63D-103X	M.G.RESISTOR	10k	1/16W (U)
R145	NRSA63D-221X	M.G.RESISTOR	220	1/16W
R146	NRSA63D-103X	M.G.RESISTOR	10k	1/16W
R147	NRSA63D-472X	M.G.RESISTOR	4.7k	1/16W
R148	NRSA63D-472X	M.G.RESISTOR	4.7k	1/16W
R149	NRSA63D-221X	M.G.RESISTOR	220	1/16W
R150	NRSA63D-103X	M.G.RESISTOR	10k	1/16W
R151	NRSA63D-472X	M.G.RESISTOR	4.7k	1/16W
R152	NRSA63D-472X	M.G.RESISTOR	4.7k	1/16W
R153	NRSA63D-334X	M.G.RESISTOR	330k	1/16W
R154	NRSA63D-104X	M.G.RESISTOR	100k	1/16W
R156	NRSA63D-221X	M.G.RESISTOR	220	1/16W
R157	NRSA63D-103X	M.G.RESISTOR	10k	1/16W
R158	NRSA63D-472X	M.G.RESISTOR	4.7k	1/16W
R159	NRSA63D-472X	M.G.RESISTOR	4.7k	1/16W
R160	NRSA63D-821X	M.G.RESISTOR	820	1/16W
R161	NRSA63D-472X	M.G.RESISTOR	4.7k	1/16W (U)
	NRSA63D-562X	M.G.RESISTOR	5.6k	1/16W (E)
R162	NRSA63D-821X	M.G.RESISTOR	820	1/16W
R164	NRSA63D-472X	M.G.RESISTOR	4.7k	1/16W (U)
	NRSA63D-562X	M.G.RESISTOR	5.6k	1/16W (E)
R166	NRSA63D-124X	M.G.RESISTOR	120k	1/16W
R167	NRSA63D-334X	M.G.RESISTOR	330k	1/16W
R168	NRSA63D-104X	M.G.RESISTOR	100k	1/16W
R172	NRSA63D-102X	M.G.RESISTOR	1k	1/16W
R173	NRSA63D-472X	M.G.RESISTOR	4.7k	1/16W
R201	NRSA63D-102X	M.G.RESISTOR	1k	1/16W
R202	NRSA63D-102X	M.G.RESISTOR	1k	1/16W
R203	NRSA63D-182X	M.G.RESISTOR	1.8k	1/16W
R204	NRSA63D-124X	M.G.RESISTOR	120k	1/16W
R206	NRSA63D-222X	M.G.RESISTOR	2.2k	1/16W
R211	NRSA63D-272X	M.G.RESISTOR	2.7k	1/16W
R213	NRSA63J-0R0X	M.G.RESISTOR	0	1/16W
R214	NRSA63D-102X	M.G.RESISTOR	1k	1/16W

Symbol No.	Part No.	Part Name	Description	
R221	NRSA63D-183X	M.G.RESISTOR	18k	1/16W
R222	NRSA63D-224X	M.G.RESISTOR	220k	1/16W (U)
	NRSA63D-124X	M.G.RESISTOR	120k	1/16W (E)
R223	NRSA63D-562X	M.G.RESISTOR	5.6k	1/16W
R224	NRSA63D-683X	M.G.RESISTOR	68k	1/16W
R225	NRSA63D-222X	M.G.RESISTOR	2.2k	1/16W
R226	NRSA63D-183X	M.G.RESISTOR	18k	1/16W
R227	NRSA63D-102X	M.G.RESISTOR	1k	1/16W
R228	NRSA63D-331X	M.G.RESISTOR	330	1/16W
R229	NRSA63D-331X	M.G.RESISTOR	330	1/16W
R230	NRSA63D-102X	M.G.RESISTOR	1k	1/16W
R233	NRSA63D-102X	M.G.RESISTOR	1k	1/16W
R235	NRSA63D-333X	M.G.RESISTOR	33k	1/16W (U)
R237	NRSA63D-102X	M.G.RESISTOR	1k	1/16W
R239	NRSA63D-102X	M.G.RESISTOR	1k	1/16W
R240	NRSA63J-0R0X	M.G.RESISTOR	0	1/16W
R241	NRSA63D-102X	M.G.RESISTOR	1k	1/16W
R242	NRSA63D-102X	M.G.RESISTOR	1k	1/16W
R244	NRSA63D-102X	M.G.RESISTOR	1k	1/16W
R245	NRSA63D-102X	M.G.RESISTOR	1k	1/16W
R246	NRSA63D-102X	M.G.RESISTOR	1k	1/16W
R247	NRSA63D-100X	M.G.RESISTOR	10	1/16W
R248	NRSA63D-750X	M.G.RESISTOR	75	1/16W
R249	NRSA63D-102X	M.G.RESISTOR	1k	1/16W
R250	NRSA63D-102X	M.G.RESISTOR	1k	1/16W
R256	NRSA63D-124X	M.G.RESISTOR	120k	1/16W (U)
R257	NRSA63D-684X	M.G.RESISTOR	680k	1/16W (U)
R266	NRSA63J-0R0X	M.G.RESISTOR	0	1/16W
R267	NRSA63D-103X	M.G.RESISTOR	10k	1/16W
R268	NRSA63D-221X	M.G.RESISTOR	220	1/16W
R269	NRSA63D-472X	M.G.RESISTOR	4.7k	1/16W
R270	NRSA63J-0R0X	M.G.RESISTOR	0	1/16W
R271	NRSA63D-102X	M.G.RESISTOR	1k	1/16W
R301	NRSA63D-102X	M.G.RESISTOR	1k	1/16W
R302	NRSA63D-102X	M.G.RESISTOR	1k	1/16W
R304	NRSA63D-823X	M.G.RESISTOR	82k	1/16W
R305	NRSA63D-122X	M.G.RESISTOR	1.2k	1/16W
R306	NRSA63D-222X	M.G.RESISTOR	2.2k	1/16W
R307	NRSA63J-0R0X	M.G.RESISTOR	0	1/16W
R311	NRSA63D-123X	M.G.RESISTOR	12k	1/16W
R312	NRSA63D-102X	M.G.RESISTOR	1k	1/16W
R313	NRSA63J-0R0X	M.G.RESISTOR	0	1/16W
R314	NRSA63D-102X	M.G.RESISTOR	1k	1/16W
R315	NRSA63D-331X	M.G.RESISTOR	330	1/16W
R316	NRSA63D-331X	M.G.RESISTOR	330	1/16W
R317	NRSA63D-102X	M.G.RESISTOR	1k	1/16W
R318	NRSA63D-221X	M.G.RESISTOR	220	1/16W (U)
	NRSA63D-181X	M.G.RESISTOR	180	1/16W (E)
R319	NRSA63D-222X	M.G.RESISTOR	2.2k	1/16W (U)
	NRSA63D-102X	M.G.RESISTOR	1k	1/16W (E)
R320	NRSA63D-122X	M.G.RESISTOR	1.2k	1/16W (U)
R322	NRSA63D-333X	M.G.RESISTOR	33k	1/16W (U)
R323	NRSA63D-101X	M.G.RESISTOR	100	1/16W (U)
	NRSA63D-151X	M.G.RESISTOR	150	1/16W (E)
R324	NRSA63D-151X	M.G.RESISTOR	150	1/16W (U)
	NRSA63D-101X	M.G.RESISTOR	100	1/16W (E)
R325	NRSA63D-103X	M.G.RESISTOR	10k	1/16W
R326	NRSA63D-221X	M.G.RESISTOR	220	1/16W
R327	NRSA63D-472X	M.G.RESISTOR	4.7k	1/16W
R328	NRSA63D-392X	M.G.RESISTOR	3.9k	1/16W (U)
	NRSA63D-472X	M.G.RESISTOR	4.7k	1/16W (E)
R329	NRSA63D-823X	M.G.RESISTOR	82k	1/16W (E)
R330	NRSA63D-563X	M.G.RESISTOR	56k	1/16W (U)
	NRSA63D-683X	M.G.RESISTOR	68k	1/16W (E)
R331	NRSA63D-564X	M.G.RESISTOR	560k	1/16W (U)
R332	NRSA63D-102X	M.G.RESISTOR	1k	1/16W
R333	NRSA63D-332X	M.G.RESISTOR	3.3k	1/16W
R334	NRSA63D-562X	M.G.RESISTOR	5.6k	1/16W
R336	NRSA63D-103X	M.G.RESISTOR	10k	1/16W
R337	NRSA63D-333X	M.G.RESISTOR	33k	1/16W
R339	NRSA63D-101X	M.G.RESISTOR	100	1/16W
R341	NRSA63D-152X	M.G.RESISTOR	1.5k	1/16W
R342	NRSA63J-0R0X	M.G.RESISTOR	0	1/16W (U)
R343	NRSA63D-562X	M.G.RESISTOR	5.6k	1/16W

[SE]

Symbol No.	Part No.	Part Name	Description	
R344	NRSA63D-562X	M.G.RESISTOR	5.6k	1/16W
R345	NRSA63D-181X	M.G.RESISTOR	180	1/16W
R346	NRSA63D-681X	M.G.RESISTOR	680	1/16W
R347	NRSA63D-272X	M.G.RESISTOR	2.7k	1/16W
R348	NRSA63D-681X	M.G.RESISTOR	680	1/16W
R349	NRSA63J-0R0X	M.G.RESISTOR	0	1/16W
R350	NRSA63J-0R0X	M.G.RESISTOR	0	1/16W
R351	NRSA63D-221X	M.G.RESISTOR	220	1/16W
R352	NRSA63D-822X	M.G.RESISTOR	8.2k	1/16W
R366	NRSA63J-0R0X	M.G.RESISTOR	0	1/16W
R367	NRSA63D-103X	M.G.RESISTOR	10k	1/16W
R368	NRSA63D-221X	M.G.RESISTOR	220	1/16W
R369	NRSA63D-472X	M.G.RESISTOR	4.7k	1/16W
R370	NRSA63J-0R0X	M.G.RESISTOR	0	1/16W
R371	NRSA63D-102X	M.G.RESISTOR	1k	1/16W
R401	NRSA63D-102X	M.G.RESISTOR	1k	1/16W
R402	NRSA63D-102X	M.G.RESISTOR	1k	1/16W
R404	NRSA63D-104X	M.G.RESISTOR	100k	1/16W
R405	NRSA63D-152X	M.G.RESISTOR	1.5k	1/16W
R406	NRSA63D-222X	M.G.RESISTOR	2.2k	1/16W
R411	NRSA63D-123X	M.G.RESISTOR	12k	1/16W
R412	NRSA63D-102X	M.G.RESISTOR	1k	1/16W
R413	NRSA63J-0R0X	M.G.RESISTOR	0	1/16W
R414	NRSA63D-102X	M.G.RESISTOR	1k	1/16W
R415	NRSA63D-331X	M.G.RESISTOR	330	1/16W
R416	NRSA63D-331X	M.G.RESISTOR	330	1/16W
R417	NRSA63D-102X	M.G.RESISTOR	1k	1/16W
R418	NRSA63D-121X	M.G.RESISTOR	120	1/16W (U)
	NRSA63D-750X	M.G.RESISTOR	75	1/16W (E)
R419	NRSA63D-122X	M.G.RESISTOR	1.2k	1/16W (U)
	NRSA63D-182X	M.G.RESISTOR	1.8k	1/16W (E)
R420	NRSA63D-911X	M.G.RESISTOR	910	1/16W (U)
R421	NRSA63D-562X	M.G.RESISTOR	5.6k	1/16W (U)
R422	NRSA63D-333X	M.G.RESISTOR	33k	1/16W (U)
R423	NRSA63D-101X	M.G.RESISTOR	100	1/16W (U)
	NRSA63D-151X	M.G.RESISTOR	150	1/16W (E)
R424	NRSA63D-151X	M.G.RESISTOR	150	1/16W (U)
	NRSA63D-101X	M.G.RESISTOR	100	1/16W (E)
R425	NRSA63D-103X	M.G.RESISTOR	10k	1/16W
R426	NRSA63D-221X	M.G.RESISTOR	220	1/16W
R427	NRSA63D-472X	M.G.RESISTOR	4.7k	1/16W
R428	NRSA63D-332X	M.G.RESISTOR	3.3k	1/16W
R429	NRSA63D-153X	M.G.RESISTOR	15k	1/16W (U)
	NRSA63D-563X	M.G.RESISTOR	56k	1/16W (E)
R430	NRSA63D-683X	M.G.RESISTOR	68k	1/16W (E)
R432	NRSA63D-102X	M.G.RESISTOR	1k	1/16W
R433	NRSA63D-332X	M.G.RESISTOR	3.3k	1/16W
R434	NRSA63D-562X	M.G.RESISTOR	5.6k	1/16W
R436	NRSA63D-103X	M.G.RESISTOR	10k	1/16W
R437	NRSA63D-333X	M.G.RESISTOR	33k	1/16W
R439	NRSA63D-101X	M.G.RESISTOR	100	1/16W
R441	NRSA63D-152X	M.G.RESISTOR	1.5k	1/16W
R442	NRSA63J-0R0X	M.G.RESISTOR	0	1/16W (U)
R443	NRSA63D-562X	M.G.RESISTOR	5.6k	1/16W
R444	NRSA63D-562X	M.G.RESISTOR	5.6k	1/16W
R445	NRSA63D-181X	M.G.RESISTOR	180	1/16W
R446	NRSA63D-272X	M.G.RESISTOR	2.7k	1/16W
R447	NRSA63J-0R0X	M.G.RESISTOR	0	1/16W
R448	NRSA63D-221X	M.G.RESISTOR	220	1/16W
R449	NRSA63J-0R0X	M.G.RESISTOR	0	1/16W
R450	NRSA63D-102X	M.G.RESISTOR	1k	1/16W
R451	NRSA63D-221X	M.G.RESISTOR	220	1/16W
R452	NRSA63D-122X	M.G.RESISTOR	1.2k	1/16W
R453	NRSA63D-122X	M.G.RESISTOR	1.2k	1/16W
R454	NRSA63D-104X	M.G.RESISTOR	100k	1/16W
R456	NRSA63J-0R0X	M.G.RESISTOR	0	1/16W
R459	NRSA63D-153X	M.G.RESISTOR	15k	1/16W
R460	NRSA63D-183X	M.G.RESISTOR	18k	1/16W
R461	NRSA63D-102X	M.G.RESISTOR	1k	1/16W
R462	NRSA63J-0R0X	M.G.RESISTOR	0	1/16W
R463	NRSA63D-221X	M.G.RESISTOR	220	1/16W
R464	NRSA63D-102X	M.G.RESISTOR	1k	1/16W
R466	NRSA63J-0R0X	M.G.RESISTOR	0	1/16W

Symbol No.	Part No.	Part Name	Description	
R467	NRSA63D-103X	M.G.RESISTOR	10k	1/16W
R468	NRSA63D-221X	M.G.RESISTOR	220	1/16W
R469	NRSA63D-472X	M.G.RESISTOR	4.7k	1/16W
R470	NRSA63J-0R0X	M.G.RESISTOR	0	1/16W
R471	NRSA63D-102X	M.G.RESISTOR	1k	1/16W
R472	NRSA63D-102X	M.G.RESISTOR	1k	1/16W
R475	NRSA63D-102X	M.G.RESISTOR	1k	1/16W
R478	NRSA63D-104X	M.G.RESISTOR	100k	1/16W
R501	NRSA63D-101X	M.G.RESISTOR	100	1/16W
R502	NRSA63D-104X	M.G.RESISTOR	100k	1/16W
R503	NRSA63D-103X	M.G.RESISTOR	10k	1/16W
R504	NRSA63D-221X	M.G.RESISTOR	220	1/16W
R505	NRSA63D-472X	M.G.RESISTOR	4.7k	1/16W
R506	NRSA63D-102X	M.G.RESISTOR	1k	1/16W
R507	NRSA63J-0R0X	M.G.RESISTOR	0	1/16W
R508	NRSA63D-102X	M.G.RESISTOR	1k	1/16W
R509	NRSA63D-102X	M.G.RESISTOR	1k	1/16W
R510	NRSA63J-0R0X	M.G.RESISTOR	0	1/16W
R511	NRSA63D-102X	M.G.RESISTOR	1k	1/16W
R512	NRSA63D-102X	M.G.RESISTOR	1k	1/16W
R513	NRSA63D-224X	M.G.RESISTOR	220k	1/16W (U)
R514	NRSA63J-0R0X	M.G.RESISTOR	0	1/16W
R515	NRSA63D-102X	M.G.RESISTOR	1k	1/16W
R517	NRSA63J-0R0X	M.G.RESISTOR	0	1/16W
R519	NRSA63D-333X	M.G.RESISTOR	33k	1/16W
R520	NRSA63D-103X	M.G.RESISTOR	10k	1/16W
R521	NRSA63D-103X	M.G.RESISTOR	10k	1/16W
R522	NRSA63J-0R0X	M.G.RESISTOR	0	1/16W
R523	NRSA63D-102X	M.G.RESISTOR	1k	1/16W
R527	NRSA63D-221X	M.G.RESISTOR	220	1/16W
R528	NRSA63D-472X	M.G.RESISTOR	4.7k	1/16W
R529	NRSA63D-101X	M.G.RESISTOR	100	1/16W
R530	NRSA63D-472X	M.G.RESISTOR	4.7k	1/16W
R531	NRSA63D-102X	M.G.RESISTOR	1k	1/16W
R532	NRSA63D-333X	M.G.RESISTOR	33k	1/16W
R533	NRSA63D-333X	M.G.RESISTOR	33k	1/16W
R534	NRSA63D-271X	M.G.RESISTOR	270	1/16W
R535	NRSA63J-0R0X	M.G.RESISTOR	0	1/16W
R536	NRSA63D-563X	M.G.RESISTOR	56k	1/16W
R537	NRSA63D-912X	M.G.RESISTOR	9.1k	1/16W
R538	NRSA63D-472X	M.G.RESISTOR	4.7k	1/16W
R540	NRSA63J-0R0X	M.G.RESISTOR	0	1/16W
R543	NRSA63D-102X	M.G.RESISTOR	1k	1/16W
R544	NRSA63D-102X	M.G.RESISTOR	1k	1/16W
R545	NRSA63D-102X	M.G.RESISTOR	1k	1/16W
R546	NRSA63D-102X	M.G.RESISTOR	1k	1/16W
R547	NRSA63D-330X	M.G.RESISTOR	33	1/16W
R548	NRSA63D-330X	M.G.RESISTOR	33	1/16W
R549	NRSA63D-330X	M.G.RESISTOR	33	1/16W
R550	NRSA63D-330X	M.G.RESISTOR	33	1/16W
R551	NRSA63D-102X	M.G.RESISTOR	1k	1/16W
R552	NRSA63D-912X	M.G.RESISTOR	9.1k	1/16W
R554	NRSA63J-0R0X	M.G.RESISTOR	0	1/16W
R556	NRSA63D-393X	M.G.RESISTOR	39k	1/16W (U)
R559	NRSA63J-0R0X	M.G.RESISTOR	0	1/16W
R562	NRSA63D-183X	M.G.RESISTOR	18k	1/16W
R563	NRSA63D-183X	M.G.RESISTOR	18k	1/16W
R564	NRSA63J-0R0X	M.G.RESISTOR	0	1/16W
R567	NRSA63D-911X	M.G.RESISTOR	910	1/16W
VR1	NVP1415-203X	TRIM.RESISTOR	20k	Fsc ADJ
VR201	NVP1415-102X	TRIM.RESISTOR	1k	CAM Y LEVEL
VR302	NVP1415-102X	TRIM.RESISTOR	1k	B-Y BAL (E)
VR303	NVP1415-102X	TRIM.RESISTOR	1k	B-Y BAL
VR402	NVP1415-102X	TRIM.RESISTOR	1k	R-Y BAL (E)
VR403	NVP1415-102X	TRIM.RESISTOR	1k	R-Y BAL
VR404	NVP1415-102X	TRIM.RESISTOR	1k	C LEVEL
C2	NBE51EM-106X	TAN.CAPACITOR	10	25V
C3	NBE51EM-106X	TAN.CAPACITOR	10	25V
C4	NBE51CM-476X	TAN.CAPACITOR	47	16V
C5	NBE51CM-476X	TAN.CAPACITOR	47	16V

Symbol No.	Part No.	Part Name	Description
C6	NBE51EM-106X	TAN.CAPACITOR	10 25V
C7	NCB31EK-473X	CER.CAPACITOR	0.047 25V
C8	NCB31CK-473X	CER.CAPACITOR	0.047 16V
C9	NCB31CK-473X	CER.CAPACITOR	0.047 16V
C10	NCB31CK-473X	CER.CAPACITOR	0.047 16V
C11	NCB31CK-473X	CER.CAPACITOR	0.047 16V
C12	NCB31CK-473X	CER.CAPACITOR	0.047 16V
C13	NCF31EZ-104X	CER.CAPACITOR	0.1 25V
C14	NBE51VM-225X	TAN.CAPACITOR	2.2 35V
C16	NCB31CK-104X	CER.CAPACITOR	0.1 16V
C17	NDC31HJ-220X	CER.CAPACITOR	22p 50V
C18	NBE51CM-476X	TAN.CAPACITOR	47 16V
C19	NCB31CK-473X	CER.CAPACITOR	0.047 16V
C20	NBE51CM-476X	TAN.CAPACITOR	47 16V
C21	NCB31CK-473X	CER.CAPACITOR	0.047 16V
C22	NBE51CM-476X	TAN.CAPACITOR	47 16V
C23	NCB31CK-473X	CER.CAPACITOR	0.047 16V
C24	NCB31CK-473X	CER.CAPACITOR	0.047 16V
C25	NCB31CK-473X	CER.CAPACITOR	0.047 16V
C26	NCB31CK-104X	CER.CAPACITOR	0.1 16V
C27	NCB31CK-473X	CER.CAPACITOR	0.047 16V
C28	NCB31CK-473X	CER.CAPACITOR	0.047 16V
C29	NCB31CK-473X	CER.CAPACITOR	0.047 16V
C30	NCB31CK-473X	CER.CAPACITOR	0.047 16V
C31	NCB31CK-473X	CER.CAPACITOR	0.047 16V
C32	NCB31CK-473X	CER.CAPACITOR	0.047 16V
C33	NCB31CK-473X	CER.CAPACITOR	0.047 16V
C34	NCB31EK-103X	CER.CAPACITOR	0.01 25V
C35	NBE21CM-105X	TAN.CAPACITOR	1 16V
C36	NCB31CK-473X	CER.CAPACITOR	0.047 16V
C37	NCB31CK-473X	CER.CAPACITOR	0.047 16V
C38	NCB31CK-473X	CER.CAPACITOR	0.047 16V
C39	NCB31CK-473X	CER.CAPACITOR	0.047 16V
C40	NCB31CK-473X	CER.CAPACITOR	0.047 16V
C41	NCB31CK-473X	CER.CAPACITOR	0.047 16V
C42	NCB31CK-473X	CER.CAPACITOR	0.047 16V
C43	NCB31EK-473X	CER.CAPACITOR	0.047 25V
C44	NCB31CK-473X	CER.CAPACITOR	0.047 16V
C45	NCB31CK-473X	CER.CAPACITOR	0.047 16V
C46	NDC31HJ-560X	CER.CAPACITOR	56p 50V
C47	NCB31CK-473X	CER.CAPACITOR	0.047 16V
C48	NDC31HJ-151X	CER.CAPACITOR	150p 50V (U)
	NDC31HJ-121X	CER.CAPACITOR	120p 50V (E)
C49	NDC31HJ-151X	CER.CAPACITOR	150p 50V (U)
	NDC31HJ-121X	CER.CAPACITOR	120p 50V (E)
C50	NCB31CK-473X	CER.CAPACITOR	0.047 16V
C51	NCB31CK-473X	CER.CAPACITOR	0.047 16V
C52	NCB31CK-473X	CER.CAPACITOR	0.047 16V
C53	NCB31CK-473X	CER.CAPACITOR	0.047 16V
C54	NCB31CK-473X	CER.CAPACITOR	0.047 16V
C55	NCB31CK-473X	CER.CAPACITOR	0.047 16V
C56	NDC31HJ-220X	CER.CAPACITOR	22p 50V
C58	NCB31CK-473X	CER.CAPACITOR	0.047 16V
C59	NCB31CK-473X	CER.CAPACITOR	0.047 16V
C60	NCB31HK-222X	CER.CAPACITOR	2200p 50V
C61	NCB31HK-222X	CER.CAPACITOR	2200p 50V
C62	NBE21CM-105X	TAN.CAPACITOR	1 16V
C63	NCB31EK-103X	CER.CAPACITOR	0.01 25V
C64	NCB31CK-473X	CER.CAPACITOR	0.047 16V
C65	NBE51CM-476X	TAN.CAPACITOR	47 16V
C66	NCB31CK-473X	CER.CAPACITOR	0.047 16V
C68	NCB31CK-473X	CER.CAPACITOR	0.047 16V
C69	NDC31HJ-270X	CER.CAPACITOR	27p 50V
C70	NDC31HJ-270X	CER.CAPACITOR	27p 50V
C71	NDC31HJ-220X	CER.CAPACITOR	22p 50V
C72	NCB31CK-473X	CER.CAPACITOR	0.047 16V
C73	NCB31EK-103X	CER.CAPACITOR	0.01 25V
C74	NCB31CK-473X	CER.CAPACITOR	0.047 16V (U)
C76	NCB31CK-473X	CER.CAPACITOR	0.047 16V
C77	NCB31CK-473X	CER.CAPACITOR	0.047 16V
C79	NCB31CK-473X	CER.CAPACITOR	0.047 16V (U)
C85	NCB31CK-104X	CER.CAPACITOR	0.1 16V
C86	NCB31CK-104X	CER.CAPACITOR	0.1 16V

Symbol No.	Part No.	Part Name	Description
C87	NCB31CK-104X	CER.CAPACITOR	0.1 16V
C88	NCB31CK-473X	CER.CAPACITOR	0.047 16V
C89	NCB31CK-473X	CER.CAPACITOR	0.047 16V
C90	NCB31CK-104X	CER.CAPACITOR	0.1 16V
C91	NDC31HJ-270X	CER.CAPACITOR	27p 50V
C93	NCB31CK-104X	CER.CAPACITOR	0.1 16V
C94	NCB31CK-473X	CER.CAPACITOR	0.047 16V
C95	NCB31CK-473X	CER.CAPACITOR	0.047 16V
C190	NCB31CK-473X	CER.CAPACITOR	0.047 16V
C201	NCB31CK-473X	CER.CAPACITOR	0.047 16V
C202	NCB31CK-473X	CER.CAPACITOR	0.047 16V
C217	NCB31CK-473X	CER.CAPACITOR	0.047 16V
C218	NCB31CK-473X	CER.CAPACITOR	0.047 16V
C219	NCB31CK-473X	CER.CAPACITOR	0.047 16V
C220	NCB31CK-473X	CER.CAPACITOR	0.047 16V
C227	NCB31CK-473X	CER.CAPACITOR	0.047 16V
C228	NCB31CK-473X	CER.CAPACITOR	0.047 16V
C231	NCB31CK-473X	CER.CAPACITOR	0.047 16V
C232	NCB31CK-473X	CER.CAPACITOR	0.047 16V
C245	NCB31CK-473X	CER.CAPACITOR	0.047 16V
C246	NCB31CK-473X	CER.CAPACITOR	0.047 16V
C301	NCB31CK-473X	CER.CAPACITOR	0.047 16V
C302	NCB31CK-473X	CER.CAPACITOR	0.047 16V
C313	NDC31HJ-120X	CER.CAPACITOR	12p 50V
C315	NCB31CK-473X	CER.CAPACITOR	0.047 16V
C316	NCB31CK-473X	CER.CAPACITOR	0.047 16V
C317	NDC31HJ-150X	CER.CAPACITOR	15p 50V
C318	NRSA63J-0R0X	M.G.RESISTOR	0 1/16W
C319	NCB31CK-473X	CER.CAPACITOR	0.047 16V
C320	NCB31CK-473X	CER.CAPACITOR	0.047 16V
C322	NDC31HJ-330X	CER.CAPACITOR	33p 50V
C325	NCB31CK-473X	CER.CAPACITOR	0.047 16V
C327	NCB31CK-104X	CER.CAPACITOR	0.1 16V
C328	NCB31EK-103X	CER.CAPACITOR	0.01 25V
C329	NCB31CK-473X	CER.CAPACITOR	0.047 16V
C330	NCB31CK-473X	CER.CAPACITOR	0.047 16V
C332	NCB31EK-103X	CER.CAPACITOR	0.01 25V
C333	NCB31EK-103X	CER.CAPACITOR	0.01 25V
C401	NCB31CK-473X	CER.CAPACITOR	0.047 16V
C402	NCB31CK-473X	CER.CAPACITOR	0.047 16V
C415	NDC31HJ-120X	CER.CAPACITOR	12p 50V
C417	NCB31CK-473X	CER.CAPACITOR	0.047 16V
C418	NCB31CK-473X	CER.CAPACITOR	0.047 16V
C419	NCB31CK-473X	CER.CAPACITOR	0.047 16V
C420	NDC31HJ-150X	CER.CAPACITOR	15p 50V
C421	NRSA63J-0R0X	M.G.RESISTOR	0 1/16W
C422	NCB31CK-473X	CER.CAPACITOR	0.047 16V
C423	NCB31CK-473X	CER.CAPACITOR	0.047 16V
C425	NDC31HJ-330X	CER.CAPACITOR	33p 50V
C428	NCB31CK-473X	CER.CAPACITOR	0.047 16V
C430	NCB31CK-473X	CER.CAPACITOR	0.047 16V
C431	NCB31CK-473X	CER.CAPACITOR	0.047 16V
C433	NCB31EK-103X	CER.CAPACITOR	0.01 25V
C434	NCB31EK-103X	CER.CAPACITOR	0.01 25V
C435	NCB31CK-473X	CER.CAPACITOR	0.047 16V
C436	NCB31CK-473X	CER.CAPACITOR	0.047 16V
C437	NCB31CK-473X	CER.CAPACITOR	0.047 16V
C438	NCB31CK-473X	CER.CAPACITOR	0.047 16V
C439	NCB31CK-473X	CER.CAPACITOR	0.047 16V
C440	NCB31CK-473X	CER.CAPACITOR	0.047 16V
C441	NCB31CK-473X	CER.CAPACITOR	0.047 16V
C442	NCB31CK-473X	CER.CAPACITOR	0.047 16V
C445	NCB31CK-473X	CER.CAPACITOR	0.047 16V
C446	NCB31CK-473X	CER.CAPACITOR	0.047 16V
C501	NDC31HJ-100X	CER.CAPACITOR	10p 50V
C502	NDC31HJ-330X	CER.CAPACITOR	33p 50V
C503	NDC31HJ-100X	CER.CAPACITOR	10p 50V
C506	NCB31CK-104X	CER.CAPACITOR	0.1 16V
C507	NDC31HJ-100X	CER.CAPACITOR	10p 50V
C508	NDC31HJ-330X	CER.CAPACITOR	33p 50V
C509	NDC31HJ-100X	CER.CAPACITOR	10p 50V
C512	NCB31CK-473X	CER.CAPACITOR	0.047 16V
C513	NCB31CK-473X	CER.CAPACITOR	0.047 16V

[SE]

Symbol No.	Part No.	Part Name	Description	
C516	NCB31CK-104X	CER.CAPACITOR	0.1	16V
C517	NCB31CK-104X	CER.CAPACITOR	0.1	16V
C518	NCB31CK-473X	CER.CAPACITOR	0.047	16V
C519	NCB31CK-473X	CER.CAPACITOR	0.047	16V
C520	NCB31CK-473X	CER.CAPACITOR	0.047	16V
C521	NCB31CK-473X	CER.CAPACITOR	0.047	16V
C524	NCB31CK-473X	CER.CAPACITOR	0.047	16V
C525	NCB31CK-473X	CER.CAPACITOR	0.047	16V
C526	NCB31CK-473X	CER.CAPACITOR	0.047	16V
C527	NCB31CK-473X	CER.CAPACITOR	0.047	16V
C532	NCB31CK-473X	CER.CAPACITOR	0.047	16V
C533	NCB31CK-473X	CER.CAPACITOR	0.047	16V
C536	NCB31CK-473X	CER.CAPACITOR	0.047	16V
C537	NCB31CK-473X	CER.CAPACITOR	0.047	16V
C538	NCB31CK-473X	CER.CAPACITOR	0.047	16V
C539	NCB31CK-473X	CER.CAPACITOR	0.047	16V
C543	NCB31CK-473X	CER.CAPACITOR	0.047	16V
C544	NCB31CK-473X	CER.CAPACITOR	0.047	16V
C545	NCB31CK-473X	CER.CAPACITOR	0.047	16V
C546	NCB31CK-473X	CER.CAPACITOR	0.047	16V
C552	NCB31CK-473X	CER.CAPACITOR	0.047	16V
C553	NCB31CK-473X	CER.CAPACITOR	0.047	16V
C558	NCB31CK-473X	CER.CAPACITOR	0.047	16V
L1	NQL054K-120X	COIL	12uH	
L2	NQL054K-120X	COIL	12uH	
L501	NQL054K-270X	COIL	27uH	
L502	NQL054K-270X	COIL	27uH	
L505	NQL054K-270X	COIL	27uH	
L506	NQL054K-270X	COIL	27uH	
LC1	EXC-CET471U	LC FILTER		
LC2	EXC-CET471U	LC FILTER		
LC3	EXC-CET471U	LC FILTER		
LC4	EXC-CET471U	LC FILTER		
LC5	EXC-CET471U	LC FILTER		
LC6	EXC-CET471U	LC FILTER		
LC7	EXC-CET471U	LC FILTER		
LC8	EXC-CET471U	LC FILTER		
DL201	SCV2030-001W	DELAY LINE		
DL202	SCV2031-001V	DELAY LINE		
X1	QAX0124-002	CRYSTAL	27MHz	
X2	NAX0022-001X	CRYSTAL	4Fsc	(U)
	NAX0021-001X	CRYSTAL	4Fsc	(E)
CN1	QGA1201F2-06X	CONNECTOR	6PIN	
CN251	QGF0508F1-50X	CONNECTOR	50PIN	
CN252	QGF0508F1-40X	CONNECTOR	40PIN	
TP1	NNZ0009-001X	TEST POINT	TP1-501	
FL201	SCV1859-001	FL FILTER		
FL301	NQR0234-001X	FL FILTER		
FL401	NQR0234-001X	FL FILTER		
FL402	NQR0067-001X	FL FILTER		(U)
	SCV2983-001X	FL FILTER		(E)
K1	NRSA63D-101X	M.G.RESISTOR	100	1/16W
K2	NRSA63D-101X	M.G.RESISTOR	100	1/16W
K3	NQR0269-004X	FERRITE BEADS	K3-13	
TB1	PGZ02228	EARTH LUG	TB1,2	

6.12 PS BOARD ASSEMBLY PARTS LIST 1 7

CK263301A1

1 7

Symbol No.	Part No.	Part Name	Description	
IC1	MB3782PF-X	I.C.(M)	FUJITSU	
IC2	MB3782PF-X	I.C.(M)	FUJITSU	
IC3	S-80840ANNP-W	I.C.(M)	SEIKO	
Q1	2SC4097/QR/-X	TRANSISTOR	ROHM	
Q2	2SC4097/QR/-X	TRANSISTOR	ROHM	
Q3	2SC4097/QR/-X	TRANSISTOR	ROHM	
Q4	2SC4097/QR/-X	TRANSISTOR	ROHM	
Q5	2SD1819A/RS/-X	TRANSISTOR	MATSUSHITA	
Q6	2SC4097/QR/-X	TRANSISTOR	ROHM	
Q9	2SC4626/BC/-X	TRANSISTOR	MATSUSHITA	
Q16	2SA1577/PQ/-X	TRANSISTOR	ROHM	
Q17	2SA1577/PQ/-X	TRANSISTOR	ROHM	
Q18	2SA1577/PQ/-X	TRANSISTOR	ROHM	
Q19	2SA1577/PQ/-X	TRANSISTOR	ROHM	
Q20	2SA1213/OY/-X	TRANSISTOR	TOSHIBA	
Q21	2SA1577/PQ/-X	TRANSISTOR	ROHM	
Q23	2SB1073/PQ/-X	TRANSISTOR	MATSUSHITA	
Q24	2SJ484WY-X	FET	HITACHI	
Q25	HAT1021R-X	TRANSISTOR	HITACHI	
Q26	2SJ484WY-X	FET	HITACHI	
Q27	2SJ484WY-X	FET	HITACHI	
Q28	2SJ484WY-X	FET	HITACHI	
Q30	HAT2020R-X	TRANSISTOR	HITACHI	
D1	MA736-X	DIODE	MATSUSHITA	
D2	MA736-X	DIODE	MATSUSHITA	
D3	MA736-X	DIODE	MATSUSHITA	
D4	MA736-X	DIODE	MATSUSHITA	
D5	DA114-X	DIODE	ROHM	
D6	MA736-X	DIODE	MATSUSHITA	
D7	DA114-X	DIODE	ROHM	
D8	DAP202U-X	DIODE	ROHM	
D9	HZM18NB2-X	ZENER DIODE	HITACHI	
D10	HZM18NB2-X	ZENER DIODE	HITACHI	
R1	NRSA63D-822X	M.G.RESISTOR	8.2k	1/16W
R2	NRSA63D-154X	M.G.RESISTOR	150k	1/16W
R3	NRSA63D-472X	M.G.RESISTOR	4.7k	1/16W
R4	NRSA63D-472X	M.G.RESISTOR	4.7k	1/16W
R5	NRSA63D-472X	M.G.RESISTOR	4.7k	1/16W
R6	NRSA63D-683X	M.G.RESISTOR	68k	1/16W
R7	NRSA63D-104X	M.G.RESISTOR	100k	1/16W
R8	NRSA63D-222X	M.G.RESISTOR	2.2k	1/16W
R9	NRSA63D-123X	M.G.RESISTOR	12k	1/16W
R10	NRSA63D-822X	M.G.RESISTOR	8.2k	1/16W
R11	NRSA63D-154X	M.G.RESISTOR	150k	1/16W
R12	NRSA63D-472X	M.G.RESISTOR	4.7k	1/16W
R13	NRSA63D-104X	M.G.RESISTOR	100k	1/16W
R14	NRSA63D-472X	M.G.RESISTOR	4.7k	1/16W
R15	NRSA63D-154X	M.G.RESISTOR	150k	1/16W
R16	NRSA63D-154X	M.G.RESISTOR	150k	1/16W
R17	NRSA63D-683X	M.G.RESISTOR	68k	1/16W
R18	NRSA63D-683X	M.G.RESISTOR	68k	1/16W
R19	NRSA63D-222X	M.G.RESISTOR	2.2k	1/16W
R20	NRSA63D-562X	M.G.RESISTOR	5.6k	1/16W
R21	NRSA63D-103X	M.G.RESISTOR	10k	1/16W
R22	NRSA63D-331X	M.G.RESISTOR	330	1/16W
R23	NRSA63D-100X	M.G.RESISTOR	10	1/16W
R24	NRSA63D-471X	M.G.RESISTOR	470	1/16W
R25	NRSA63D-332X	M.G.RESISTOR	3.3k	1/16W
R26	NRSA63D-471X	M.G.RESISTOR	470	1/16W
R27	NRSA63D-332X	M.G.RESISTOR	3.3k	1/16W
R28	NRSA63D-100X	M.G.RESISTOR	10	1/16W
R29	NRSA63D-471X	M.G.RESISTOR	470	1/16W
R30	NRSA63D-332X	M.G.RESISTOR	3.3k	1/16W
R31	NRSA63D-100X	M.G.RESISTOR	10	1/16W
R32	NRSA63D-222X	M.G.RESISTOR	2.2k	1/16W
R33	NRSA63D-103X	M.G.RESISTOR	10k	1/16W
R34	NRSA63D-683X	M.G.RESISTOR	68k	1/16W
R35	NRSA63D-563X	M.G.RESISTOR	56k	1/16W
R36	NRSA63D-683X	M.G.RESISTOR	68k	1/16W
R37	NRSA63D-222X	M.G.RESISTOR	2.2k	1/16W

Symbol No.	Part No.	Part Name	Description	
R38	NRSA63D-471X	M.G.RESISTOR	470	1/16W
R39	NRSA63D-332X	M.G.RESISTOR	3.3k	1/16W
R40	NRSA63D-100X	M.G.RESISTOR	10	1/16W
R41	NRSA63D-561X	M.G.RESISTOR	560	1/16W
R42	NRSA63D-471X	M.G.RESISTOR	470	1/16W
R43	NRSA63D-332X	M.G.RESISTOR	3.3k	1/16W
R44	NRSA63D-100X	M.G.RESISTOR	10	1/16W
R45	NRSA63D-331X	M.G.RESISTOR	330	1/16W
R46	NRSA63D-153X	M.G.RESISTOR	15k	1/16W
R47	NRSA63D-154X	M.G.RESISTOR	150k	1/16W
R48	NRSA63D-222X	M.G.RESISTOR	2.2k	1/16W
R49	NRSA63D-683X	M.G.RESISTOR	68k	1/16W
R50	NRSA63D-683X	M.G.RESISTOR	68k	1/16W
R51	NRSA63D-124X	M.G.RESISTOR	120k	1/16W
R52	NRSA63D-472X	M.G.RESISTOR	4.7k	1/16W
R53	NRSA63D-154X	M.G.RESISTOR	150k	1/16W
R54	NRSA63D-224X	M.G.RESISTOR	220k	1/16W
R55	NRSA63D-472X	M.G.RESISTOR	4.7k	1/16W
R56	NRSA63D-154X	M.G.RESISTOR	150k	1/16W
R57	NRSA63D-182X	M.G.RESISTOR	1.8k	1/16W
R58	NRSA63D-223X	M.G.RESISTOR	22k	1/16W
R59	NRSA63D-472X	M.G.RESISTOR	4.7k	1/16W
R60	NRSA63D-274X	M.G.RESISTOR	270k	1/16W
R61	NRSA63D-683X	M.G.RESISTOR	68k	1/16W
R62	NRSA63D-472X	M.G.RESISTOR	4.7k	1/16W
R63	NRSA63D-472X	M.G.RESISTOR	4.7k	1/16W
R64	NRSA63D-472X	M.G.RESISTOR	4.7k	1/16W
R65	NRSA63D-154X	M.G.RESISTOR	150k	1/16W
R66	NRSA63D-822X	M.G.RESISTOR	8.2k	1/16W
R67	NRSA63D-391X	M.G.RESISTOR	390	1/16W
R72	NRSA63D-274X	M.G.RESISTOR	270k	1/16W
R73	NRSA63J-0R0X	M.G.RESISTOR	0	1/16W
R77	NRSA63D-683X	M.G.RESISTOR	68k	1/16W
R78	NRSA63D-223X	M.G.RESISTOR	22k	1/16W
R79	NRSA63D-102X	M.G.RESISTOR	1k	1/16W
R80	NRSA63D-103X	M.G.RESISTOR	10k	1/16W
R81	NRSA63D-152X	M.G.RESISTOR	1.5k	1/16W
R82	NRSA63D-223X	M.G.RESISTOR	22k	1/16W
R83	NRSA63D-223X	M.G.RESISTOR	22k	1/16W
R91	NRSA63J-0R0X	M.G.RESISTOR	0	1/16W
R100	NRSA63D-333X	M.G.RESISTOR	33k	1/16W
C1	NCB31EK-822X	CER.CAPACITOR	8200p	25V
C2	NCB31CK-104X	CER.CAPACITOR	0.1	16V
C3	NCB31CK-104X	CER.CAPACITOR	0.1	16V
C4	NDC31HJ-821X	CER.CAPACITOR	820p	50V
C5	NCB31CK-104X	CER.CAPACITOR	0.1	16V
C6	NCB31CK-104X	CER.CAPACITOR	0.1	16V
C7	NCB31CK-104X	CER.CAPACITOR	0.1	16V
C8	NCB31CK-104X	CER.CAPACITOR	0.1	16V
C9	NCB31CK-104X	CER.CAPACITOR	0.1	16V
C10	NCB31CK-104X	CER.CAPACITOR	0.1	16V
C11	NCB31EK-473X	CER.CAPACITOR	0.047	25V
C12	NCB31CK-104X	CER.CAPACITOR	0.1	16V
C13	NCB31CK-104X	CER.CAPACITOR	0.1	16V
C14	NCB31CK-104X	CER.CAPACITOR	0.1	16V
C15	NDC31HJ-821X	CER.CAPACITOR	820p	50V
C16	NCB31CK-104X	CER.CAPACITOR	0.1	16V
C17	NCB31CK-104X	CER.CAPACITOR	0.1	16V
C18	NCB31EK-822X	CER.CAPACITOR	8200p	25V
C19	NDC31HJ-331X	CER.CAPACITOR	330p	50V
C20	NCB31HK-102X	CER.CAPACITOR	1000p	50V
C21	NCB31CK-104X	CER.CAPACITOR	0.1	16V
C22	NCB31EK-473X	CER.CAPACITOR	0.047	25V
C23	NCB31EK-822X	CER.CAPACITOR	8200p	25V
C24	NCB31EK-822X	CER.CAPACITOR	8200p	25V
C25	NCB31EK-822X	CER.CAPACITOR	8200p	25V
C26	NCB31EK-822X	CER.CAPACITOR	8200p	25V
C27	NCB31EK-473X	CER.CAPACITOR	0.047	25V
C28	NCB31EK-473X	CER.CAPACITOR	0.047	25V
C30	NBQD1AM-686X	TAN.CAPACITOR	68	10V
C31	NBQD1AM-686X	TAN.CAPACITOR	68	10V

Symbol No.	Part No.	Part Name	Description	
C32	NBQD1AM-686X	TAN.CAPACITOR	68	10V
C33	NBQD1AM-686X	TAN.CAPACITOR	68	10V
C34	NBQD1AM-686X	TAN.CAPACITOR	68	10V
C35	NBQD1AM-686X	TAN.CAPACITOR	68	10V
C36	NEX41DM-226X	E.CAPACITOR	22	20V
C37	NEX41DM-226X	E.CAPACITOR	22	20V
C38	NEH71EM-226X	E.CAPACITOR	22	25V
C39	NEH71EM-226X	E.CAPACITOR	22	25V
C40	NBQD1AM-686X	TAN.CAPACITOR	68	10V
C41	NBQD1AM-686X	TAN.CAPACITOR	68	10V
C42	NEH71EM-226X	E.CAPACITOR	22	25V
C43	NEH71EM-226X	E.CAPACITOR	22	25V
C44	NEH71EM-226X	E.CAPACITOR	22	25V
C45	NEH71EM-226X	E.CAPACITOR	22	25V
C46	NEH71EM-226X	E.CAPACITOR	22	25V
C47	NRSA63J-0R0X	M.G.RESISTOR	0	1/16W
C48	NRSA63J-0R0X	M.G.RESISTOR	0	1/16W
L1	SSV2810-330V	COIL	33uH	
L2	SSV2810-330V	COIL	33uH	
L3	NQL42EM-220X	COIL	22uH	
L4	NQL26CM-220X	COIL	22uH	
L5	NQL25CM-470X	COIL	47uH	
L6	SSV2810-330V	COIL	33uH	
L7	NQL25CM-470X	COIL	47uH	
L8	SSV2810-330V	COIL	33uH	
L9	SSV2810-330V	COIL	33uH	
L10	SSV2810-330V	COIL	33uH	
L11	SSV2810-330V	COIL	33uH	
L12	SSV2810-330V	COIL	33uH	
L13	NQL26CM-220X	COIL	22uH	
L14	NQL26CM-220X	COIL	22uH	
TH1	NAD0024-001X	THERMISTOR		
TH2	NAD0024-001X	THERMISTOR		
TH3	NAD0024-001X	THERMISTOR		
TH9	NAD0024-003X	THERMISTOR		
CN3	QGA1201C2-15X	CONNECTOR	15PIN	
CN4	QGA1201C2-03X	CONNECTOR	3PIN	
CN41	QGA2001C2-05X	CONNECTOR	5PIN	
CN43	QGA1201C2-04X	CONNECTOR	4PIN	
TP1	NNZ0009-001X	TEST POINT	TP1-8	
⚠CP1	ICP-S0.5TN	ICP		
⚠CP2	ICP-S1.8TN	ICP		
⚠CP3	ICP-S1.0TN	ICP		
T1	NQS0051-001X	TRANSFORMER		

6.13 IF2 BOARD ASSEMBLY PARTS LIST [1][8]

CK263300A2 [1][8]

Symbol No.	Part No.	Part Name	Description
IC1	CLC450AJM5-X	I.C.(M)	NATIONAL SEMICO
IC2	CLC450AJM5-X	I.C.(M)	NATIONAL SEMICO
IC3	CLC450AJM5-X	I.C.(M)	NATIONAL SEMICO
IC4	CLC450AJM5-X	I.C.(M)	NATIONAL SEMICO
D1	MA143A-X	DIODE	MATSUSHITA
D2	MA143A-X	DIODE	MATSUSHITA
D3	MA143A-X	DIODE	MATSUSHITA
D4	MA143A-X	DIODE	MATSUSHITA
R2	NRSA63D-102X	M.G.RESISTOR	1k 1/16W
R3	NRSA63D-101X	M.G.RESISTOR	100 1/16W
R4	NRSA63D-104X	M.G.RESISTOR	100k 1/16W
R5	NRSA63D-750X	M.G.RESISTOR	75 1/16W
R6	NRSA63D-102X	M.G.RESISTOR	1k 1/16W
R7	NRSA63D-102X	M.G.RESISTOR	1k 1/16W
R8	NRSA63D-101X	M.G.RESISTOR	100 1/16W
R9	NRSA63D-104X	M.G.RESISTOR	100k 1/16W
R10	NRSA63D-750X	M.G.RESISTOR	75 1/16W
R11	NRSA63D-102X	M.G.RESISTOR	1k 1/16W
R12	NRSA63D-102X	M.G.RESISTOR	1k 1/16W
R13	NRSA63D-101X	M.G.RESISTOR	100 1/16W
R14	NRSA63D-104X	M.G.RESISTOR	100k 1/16W
R15	NRSA63D-750X	M.G.RESISTOR	75 1/16W
R16	NRSA63D-102X	M.G.RESISTOR	1k 1/16W
R17	NRSA63D-102X	M.G.RESISTOR	1k 1/16W
R18	NRSA63D-101X	M.G.RESISTOR	100 1/16W
R19	NRSA63D-104X	M.G.RESISTOR	100k 1/16W
R20	NRSA63D-750X	M.G.RESISTOR	75 1/16W
C1	NCB31EK-473X	CER.CAPACITOR	0.047 25V
C2	NCB31EK-473X	CER.CAPACITOR	0.047 25V
C3	NCB31EK-473X	CER.CAPACITOR	0.047 25V
C4	NCB31EK-473X	CER.CAPACITOR	0.047 25V
C5	NCB31EK-473X	CER.CAPACITOR	0.047 25V
C6	NCB31EK-473X	CER.CAPACITOR	0.047 25V
C7	NCB31EK-473X	CER.CAPACITOR	0.047 25V
C8	NCB31EK-473X	CER.CAPACITOR	0.047 25V
C9	NBE71CM-476X	TAN.CAPACITOR	47 16V
C10	NBE71CM-476X	TAN.CAPACITOR	47 16V
CN61	QGF0508F1-40X	CONNECTOR	40PIN
CN71	QGF0508F1-30X	CONNECTOR	30PIN
CN72	QGA1201F2-08X	CONNECTOR	8PIN
LG1	SC43876-008	LUG ASSEMBLY	

6.14 DPR BOARD ASSEMBLY PARTS LIST [1][9]

CK2636U0A1(U)

CK2636E0A1(E) [1][9]

Symbol No.	Part No.	Part Name	Description
IC1	JCS0050	I.C.(M)	JVC
IC2	EP20K160EQC2083	I.C.(M)	ALTERA
IC3	CXD2309Q-X	I.C.(M)	SONY
IC4	MSM7664TB	I.C.(M)	OKI
IC101	CLC450AJM5-X	I.C.(M)	NATIONAL SEMICO
IC102	NJM062V-X	I.C.(M)	JRC
IC103	ADS933Y-X	I.C.(M)	ANALOG DEVICES
IC104	LP2986IMM-X	I.C.(M)	NATIONAL SEMICO
IC111	CLC450AJM5-X	I.C.(M)	NATIONAL SEMICO
IC113	ADS933Y-X	I.C.(M)	ANALOG DEVICES
IC121	CLC450AJM5-X	I.C.(M)	NATIONAL SEMICO
IC122	NJM062V-X	I.C.(M)	JRC
IC123	ADS933Y-X	I.C.(M)	ANALOG DEVICES
IC131	TC7WH126FU-X	I.C.(M)	TOSHIBA
IC132	UPD6461GS-913	I.C.(M)	NEC
IC133	TC7SH08FU-X	I.C.(M)	TOSHIBA
IC134	SN74LV08APW-X	I.C.(M)	TEXAS
IC135	AD8031ART-X	I.C.(M)	ANALOG DEVICES
IC201	EPC2TC32-003	I.C.(M)	ALTERA (U)
	EPC2TC32-004	I.C.(M)	ALTERA (E)
IC202	LM1117MP1.8-X	I.C.(M)	NATIONAL SEMICO
IC203	LP2986IMM-X	I.C.(M)	NATIONAL SEMICO
IC204	CLC450AJM5-X	I.C.(M)	NATIONAL SEMICO
IC205	CLC450AJM5-X	I.C.(M)	NATIONAL SEMICO
IC206	CLC450AJM5-X	I.C.(M)	NATIONAL SEMICO
IC207	DS90LV018ATM-X	I.C.(M)	NATIONAL SEMICO
IC208	SN74LV08APW-X	I.C.(M)	TEXAS
IC209	LP2986IMM-X	I.C.(M)	NATIONAL SEMICO
IC210	TLC2932IPW-X	I.C.(M)	TEXAS
IC211	TC7WT240FU-X	I.C.(M)	TOSHIBA
IC212	TC7SH00FU-X	I.C.(M)	TOSHIBA
IC301	LP2986IMM-X	I.C.(M)	NATIONAL SEMICO
IC302	CLC450AJM5-X	I.C.(M)	NATIONAL SEMICO
IC401	SN74LV574APW-X	I.C.(M)	TEXAS
IC402	SN74LV574APW-X	I.C.(M)	TEXAS
IC403	SN74LV574APW-X	I.C.(M)	TEXAS
IC407	TC7SH00FU-X	I.C.(M)	TOSHIBA
Q301	2SC4626/BC/-X	TRANSISTOR	MATSUSHITA
Q302	2SA1790/BC/-X	TRANSISTOR	MATSUSHITA
D301	MA143A-X	DIODE	MATSUSHITA
D401	MA111-X	DIODE	MATSUSHITA
R101	NRSA63D-821X	M.G.RESISTOR	820 1/16W
R102	NRSA63D-102X	M.G.RESISTOR	1k 1/16W
R103	NRSA63D-272X	M.G.RESISTOR	2.7k 1/16W
R104	NRSA63D-362X	M.G.RESISTOR	3.6k 1/16W
R105	NRSA63D-333X	M.G.RESISTOR	33k 1/16W
R106	NRSA63D-101X	M.G.RESISTOR	100 1/16W
R107	NRSA63J-105X	M.G.RESISTOR	1M 1/16W
R108	NRSA63J-105X	M.G.RESISTOR	1M 1/16W
R109	NRSA63D-103X	M.G.RESISTOR	10k 1/16W
R110	NRSA63D-101X	M.G.RESISTOR	100 1/16W
R111	NRSA63D-182X	M.G.RESISTOR	1.8k 1/16W
R112	NRSA63D-392X	M.G.RESISTOR	3.9k 1/16W
R121	NRSA63D-334X	M.G.RESISTOR	330k 1/16W
R122	NRSA63D-224X	M.G.RESISTOR	220k 1/16W
R123	NRSA63D-564X	M.G.RESISTOR	560k 1/16W
R124	NRSA63D-513X	M.G.RESISTOR	51k 1/16W
R131	NRSA63D-821X	M.G.RESISTOR	820 1/16W
R132	NRSA63D-102X	M.G.RESISTOR	1k 1/16W
R133	NRSA63D-272X	M.G.RESISTOR	2.7k 1/16W
R134	NRSA63D-362X	M.G.RESISTOR	3.6k 1/16W
R135	NRSA63D-333X	M.G.RESISTOR	33k 1/16W
R136	NRSA63D-101X	M.G.RESISTOR	100 1/16W
R137	NRSA63J-105X	M.G.RESISTOR	1M 1/16W
R138	NRSA63J-105X	M.G.RESISTOR	1M 1/16W
R139	NRSA63D-103X	M.G.RESISTOR	10k 1/16W
R140	NRSA63D-101X	M.G.RESISTOR	100 1/16W
R141	NRSA63D-182X	M.G.RESISTOR	1.8k 1/16W
R142	NRSA63D-392X	M.G.RESISTOR	3.9k 1/16W

Symbol No.	Part No.	Part Name	Description	
R151	NRSA63D-821X	M.G.RESISTOR	820	1/16W
R152	NRSA63D-102X	M.G.RESISTOR	1k	1/16W
R153	NRSA63D-272X	M.G.RESISTOR	2.7k	1/16W
R154	NRSA63D-362X	M.G.RESISTOR	3.6k	1/16W
R155	NRSA63D-333X	M.G.RESISTOR	33k	1/16W
R156	NRSA63D-101X	M.G.RESISTOR	100	1/16W
R157	NRSA63J-105X	M.G.RESISTOR	1M	1/16W
R158	NRSA63J-105X	M.G.RESISTOR	1M	1/16W
R159	NRSA63D-103X	M.G.RESISTOR	10k	1/16W
R160	NRSA63D-101X	M.G.RESISTOR	100	1/16W
R161	NRSA63D-182X	M.G.RESISTOR	1.8k	1/16W
R162	NRSA63D-392X	M.G.RESISTOR	3.9k	1/16W
R171	NRSA63D-101X	M.G.RESISTOR	100	1/16W
R172	NRSA63D-101X	M.G.RESISTOR	100	1/16W
R174	NRSA63D-223X	M.G.RESISTOR	22k	1/16W
R175	NRSA63D-223X	M.G.RESISTOR	22k	1/16W
R176	NRSA63D-223X	M.G.RESISTOR	22k	1/16W
R177	NRSA63D-223X	M.G.RESISTOR	22k	1/16W
R178	NRSA63D-622X	M.G.RESISTOR	6.2k	1/16W
R179	NRSA63D-223X	M.G.RESISTOR	22k	1/16W
R180	NRSA63D-183X	M.G.RESISTOR	18k	1/16W
R181	NRSA63D-183X	M.G.RESISTOR	18k	1/16W
R182	NRSA63D-183X	M.G.RESISTOR	18k	1/16W
R184	NRSA63D-562X	M.G.RESISTOR	5.6k	1/16W
R185	NRSA63D-561X	M.G.RESISTOR	560	1/16W
R186	NRSA63D-103X	M.G.RESISTOR	10k	1/16W
R201	NRSA63J-0R0X	M.G.RESISTOR	0	1/16W
R202	NRSA63J-0R0X	M.G.RESISTOR	0	1/16W
R203	NRSA63D-560X	M.G.RESISTOR	56	1/16W
R204	NRSA63D-560X	M.G.RESISTOR	56	1/16W
R205	NRSA63J-0R0X	M.G.RESISTOR	0	1/16W
R206	NRSA63J-0R0X	M.G.RESISTOR	0	1/16W
R207	NRSA63J-0R0X	M.G.RESISTOR	0	1/16W
R208	NRSA63J-0R0X	M.G.RESISTOR	0	1/16W
R210	NRSA63J-0R0X	M.G.RESISTOR	0	1/16W
R211	NRSA63J-0R0X	M.G.RESISTOR	0	1/16W
R212	NRSA63D-560X	M.G.RESISTOR	56	1/16W
R213	NRSA63D-102X	M.G.RESISTOR	1k	1/16W
R214	NRSA63D-102X	M.G.RESISTOR	1k	1/16W
R215	NRSA63D-102X	M.G.RESISTOR	1k	1/16W
R216	NRSA63D-102X	M.G.RESISTOR	1k	1/16W
R217	NRSA63D-102X	M.G.RESISTOR	1k	1/16W
R218	NRSA63D-102X	M.G.RESISTOR	1k	1/16W
R219	NRSA63D-102X	M.G.RESISTOR	1k	1/16W
R220	NRSA63J-0R0X	M.G.RESISTOR	0	1/16W
R221	NRSA63D-101X	M.G.RESISTOR	100	1/16W
R222	NRSA63D-560X	M.G.RESISTOR	56	1/16W
R223	NRSA63D-101X	M.G.RESISTOR	100	1/16W
R224	NRSA63D-560X	M.G.RESISTOR	56	1/16W
R230	NRSA63D-334X	M.G.RESISTOR	330k	1/16W
R231	NRSA63D-224X	M.G.RESISTOR	220k	1/16W
R232	NRSA63D-513X	M.G.RESISTOR	51k	1/16W
R233	NRSA63D-564X	M.G.RESISTOR	560k	1/16W
R234	NRSA63D-333X	M.G.RESISTOR	33k	1/16W
R235	NRSA63D-223X	M.G.RESISTOR	22k	1/16W
R236	NRSA63D-332X	M.G.RESISTOR	3.3k	1/16W
R238	NRSA63D-201X	M.G.RESISTOR	200	1/16W
R239	NRSA63D-221X	M.G.RESISTOR	220	1/16W
R240	NRSA63D-153X	M.G.RESISTOR	15k	1/16W
R241	NRSA63D-102X	M.G.RESISTOR	1k	1/16W
R242	NRSA63J-100X	M.G.RESISTOR	10	1/16W
R244	NRSA63D-201X	M.G.RESISTOR	200	1/16W
R245	NRSA63D-221X	M.G.RESISTOR	220	1/16W
R246	NRSA63D-512X	M.G.RESISTOR	5.1k	1/16W
R247	NRSA63D-303X	M.G.RESISTOR	30k	1/16W
R248	NRSA63D-102X	M.G.RESISTOR	1k	1/16W
R249	NRSA63J-100X	M.G.RESISTOR	10	1/16W
R251	NRSA63D-201X	M.G.RESISTOR	200	1/16W
R252	NRSA63D-221X	M.G.RESISTOR	220	1/16W
R253	NRSA63D-512X	M.G.RESISTOR	5.1k	1/16W
R254	NRSA63D-303X	M.G.RESISTOR	30k	1/16W
R255	NRSA63D-102X	M.G.RESISTOR	1k	1/16W

Symbol No.	Part No.	Part Name	Description	
R256	NRSA63J-100X	M.G.RESISTOR	10	1/16W
R257	NRSA63D-560X	M.G.RESISTOR	56	1/16W
R258	NRSA63D-101X	M.G.RESISTOR	100	1/16W
R260	NRSA63D-334X	M.G.RESISTOR	330k	1/16W
R261	NRSA63D-224X	M.G.RESISTOR	220k	1/16W
R262	NRSA63D-513X	M.G.RESISTOR	51k	1/16W
R263	NRSA63D-564X	M.G.RESISTOR	560k	1/16W
R264	NRSA63D-272X	M.G.RESISTOR	2.7k	1/16W
R265	NRSA63D-563X	M.G.RESISTOR	56k	1/16W
R266	NRSA63D-561X	M.G.RESISTOR	560	1/16W
R267	NRSA63D-560X	M.G.RESISTOR	56	1/16W
R301	NRSA63D-334X	M.G.RESISTOR	330k	1/16W
R302	NRSA63D-104X	M.G.RESISTOR	100k	1/16W
R303	NRSA63D-564X	M.G.RESISTOR	560k	1/16W
R304	NRSA63D-513X	M.G.RESISTOR	51k	1/16W
R305	NRSA63J-0R0X	M.G.RESISTOR	0	1/16W
R306	NRSA63D-101X	M.G.RESISTOR	100	1/16W
R308	NRSA63J-0R0X	M.G.RESISTOR	0	1/16W (E)
R311	NRSA63D-222X	M.G.RESISTOR	2.2k	1/16W
R312	NRSA63D-101X	M.G.RESISTOR	100	1/16W
R313	NRSA63D-392X	M.G.RESISTOR	3.9k	1/16W
R314	NRSA63D-102X	M.G.RESISTOR	1k	1/16W
R315	NRSA63D-102X	M.G.RESISTOR	1k	1/16W
R316	NRSA63D-822X	M.G.RESISTOR	8.2k	1/16W
R317	NRSA63D-122X	M.G.RESISTOR	1.2k	1/16W
R318	NRSA63D-102X	M.G.RESISTOR	1k	1/16W
R319	NRSA63D-101X	M.G.RESISTOR	100	1/16W
R320	NRSA63D-101X	M.G.RESISTOR	100	1/16W
R321	NRSA63D-222X	M.G.RESISTOR	2.2k	1/16W
R322	NRSA63J-0R0X	M.G.RESISTOR	0	1/16W
R323	NRSA63D-472X	M.G.RESISTOR	4.7k	1/16W
R324	NRSA63D-153X	M.G.RESISTOR	15k	1/16W
R405	NRSA63D-101X	M.G.RESISTOR	100	1/16W
R406	NRSA63D-101X	M.G.RESISTOR	100	1/16W
R407	NRSA63D-101X	M.G.RESISTOR	100	1/16W
R410	NRSA63D-101X	M.G.RESISTOR	100	1/16W
R411	NRSA63D-101X	M.G.RESISTOR	100	1/16W
R412	NRSA63D-101X	M.G.RESISTOR	100	1/16W
R413	NRSA63D-101X	M.G.RESISTOR	100	1/16W
R414	NRSA63D-101X	M.G.RESISTOR	100	1/16W
R415	NRSA63D-101X	M.G.RESISTOR	100	1/16W
R416	NRSA63D-101X	M.G.RESISTOR	100	1/16W
R417	NRSA63D-101X	M.G.RESISTOR	100	1/16W
R418	NRSA63D-101X	M.G.RESISTOR	100	1/16W
R419	NRSA63D-101X	M.G.RESISTOR	100	1/16W
R420	NRSA63D-101X	M.G.RESISTOR	100	1/16W
R421	NRSA63D-101X	M.G.RESISTOR	100	1/16W
R426	NRSA63D-101X	M.G.RESISTOR	100	1/16W
R427	NRSA63D-101X	M.G.RESISTOR	100	1/16W
R428	NRSA63D-101X	M.G.RESISTOR	100	1/16W
R429	NRSA63D-101X	M.G.RESISTOR	100	1/16W
R430	NRSA63D-101X	M.G.RESISTOR	100	1/16W
R431	NRSA63D-101X	M.G.RESISTOR	100	1/16W
R432	NRSA63D-101X	M.G.RESISTOR	100	1/16W
R433	NRSA63D-101X	M.G.RESISTOR	100	1/16W
R434	NRSA63D-101X	M.G.RESISTOR	100	1/16W
R435	NRSA63D-101X	M.G.RESISTOR	100	1/16W
R436	NRSA63D-101X	M.G.RESISTOR	100	1/16W
R437	NRSA63D-101X	M.G.RESISTOR	100	1/16W
R438	NRSA63D-101X	M.G.RESISTOR	100	1/16W
R439	NRSA63D-101X	M.G.RESISTOR	100	1/16W
R440	NRSA63D-101X	M.G.RESISTOR	100	1/16W
R441	NRSA63D-101X	M.G.RESISTOR	100	1/16W
R442	NRSA63D-101X	M.G.RESISTOR	100	1/16W
R443	NRSA63D-101X	M.G.RESISTOR	100	1/16W
R444	NRSA63D-101X	M.G.RESISTOR	100	1/16W
R445	NRSA63D-104X	M.G.RESISTOR	100k	1/16W
R446	NRSA63D-224X	M.G.RESISTOR	220k	1/16W
R447	NRSA63D-273X	M.G.RESISTOR	27k	1/16W
R448	NRSA63D-473X	M.G.RESISTOR	47k	1/16W
R449	NRSA63D-102X	M.G.RESISTOR	1k	1/16W

[DPR]

Symbol No.	Part No.	Part Name	Description	
C101	NCB31CK-473X	CER.CAPACITOR	0.047	16V
C102	NCB31CK-473X	CER.CAPACITOR	0.047	16V
C103	NCB31CK-473X	CER.CAPACITOR	0.047	16V
C104	NCB31CK-473X	CER.CAPACITOR	0.047	16V
C105	NCB31CK-473X	CER.CAPACITOR	0.047	16V
C106	NCB11CK-105X	CER.CAPACITOR	1	16V
C107	NCB31CK-104X	CER.CAPACITOR	0.1	16V
C108	NBE21AM-106X	TAN.CAPACITOR	10	10V
C109	NCB31CK-473X	CER.CAPACITOR	0.047	16V
C110	NCB31CK-473X	CER.CAPACITOR	0.047	16V
C111	NCB30JK-474X	CER.CAPACITOR	0.47	6.3V
C112	NCB31CK-104X	CER.CAPACITOR	0.1	16V
C113	NCB31CK-104X	CER.CAPACITOR	0.1	16V
C114	NCB30JK-474X	CER.CAPACITOR	0.47	6.3V
C115	NCB30JK-474X	CER.CAPACITOR	0.47	6.3V
C116	NDC31HJ-220X	CER.CAPACITOR	22p	50V
C117	NCB31CK-473X	CER.CAPACITOR	0.047	16V
C118	NDC31HJ-220X	CER.CAPACITOR	22p	50V
C119	NBE21DM-475X	TAN.CAPACITOR	4.7	20V
C120	NDC31HJ-220X	CER.CAPACITOR	22p	50V
C121	NBE21AM-106X	TAN.CAPACITOR	10	10V
C131	NCB31CK-473X	CER.CAPACITOR	0.047	16V
C132	NCB31CK-473X	CER.CAPACITOR	0.047	16V
C135	NCB31CK-473X	CER.CAPACITOR	0.047	16V
C136	NCB11CK-105X	CER.CAPACITOR	1	16V
C137	NCB31CK-104X	CER.CAPACITOR	0.1	16V
C138	NBE21AM-106X	TAN.CAPACITOR	10	10V
C139	NCB31CK-473X	CER.CAPACITOR	0.047	16V
C140	NCB31CK-473X	CER.CAPACITOR	0.047	16V
C141	NCB30JK-474X	CER.CAPACITOR	0.47	6.3V
C142	NCB31CK-104X	CER.CAPACITOR	0.1	16V
C143	NCB31CK-104X	CER.CAPACITOR	0.1	16V
C144	NCB30JK-474X	CER.CAPACITOR	0.47	6.3V
C145	NCB30JK-474X	CER.CAPACITOR	0.47	6.3V
C146	NDC31HJ-220X	CER.CAPACITOR	22p	50V
C147	NCB31CK-473X	CER.CAPACITOR	0.047	16V
C148	NDC31HJ-220X	CER.CAPACITOR	22p	50V
C151	NCB31CK-473X	CER.CAPACITOR	0.047	16V
C152	NCB31CK-473X	CER.CAPACITOR	0.047	16V
C153	NCB31CK-473X	CER.CAPACITOR	0.047	16V
C154	NCB31CK-473X	CER.CAPACITOR	0.047	16V
C155	NCB31CK-473X	CER.CAPACITOR	0.047	16V
C156	NCB11CK-105X	CER.CAPACITOR	1	16V
C157	NCB31CK-104X	CER.CAPACITOR	0.1	16V
C158	NBE21AM-106X	TAN.CAPACITOR	10	10V
C159	NCB31CK-473X	CER.CAPACITOR	0.047	16V
C160	NCB31CK-473X	CER.CAPACITOR	0.047	16V
C161	NCB30JK-474X	CER.CAPACITOR	0.47	6.3V
C162	NCB31CK-104X	CER.CAPACITOR	0.1	16V
C163	NCB31CK-104X	CER.CAPACITOR	0.1	16V
C164	NCB30JK-474X	CER.CAPACITOR	0.47	6.3V
C165	NCB30JK-474X	CER.CAPACITOR	0.47	6.3V
C166	NDC31HJ-220X	CER.CAPACITOR	22p	50V
C167	NCB31CK-473X	CER.CAPACITOR	0.047	16V
C168	NDC31HJ-220X	CER.CAPACITOR	22p	50V
C171	NCB31CK-473X	CER.CAPACITOR	0.047	16V
C173	NCB31CK-473X	CER.CAPACITOR	0.047	16V
C175	NCB31CK-473X	CER.CAPACITOR	0.047	16V
C176	NCB31CK-473X	CER.CAPACITOR	0.047	16V
C177	NCB31CK-473X	CER.CAPACITOR	0.047	16V
C178	NBE21AM-106X	TAN.CAPACITOR	10	10V
C179	NCB31CK-473X	CER.CAPACITOR	0.047	16V
C180	NCB31CK-473X	CER.CAPACITOR	0.047	16V
C181	NCB31CK-473X	CER.CAPACITOR	0.047	16V
C182	NCB31CK-473X	CER.CAPACITOR	0.047	16V
C183	NCB31CK-473X	CER.CAPACITOR	0.047	16V
C184	NCB31CK-473X	CER.CAPACITOR	0.047	16V
C185	NCB31CK-473X	CER.CAPACITOR	0.047	16V
C186	NBE21AM-106X	TAN.CAPACITOR	10	10V
C187	NCB31CK-473X	CER.CAPACITOR	0.047	16V
C188	NCB31CK-473X	CER.CAPACITOR	0.047	16V
C189	NCB31CK-473X	CER.CAPACITOR	0.047	16V
C190	NCB31CK-473X	CER.CAPACITOR	0.047	16V

Symbol No.	Part No.	Part Name	Description	
C191	NCB31CK-473X	CER.CAPACITOR	0.047	16V
C192	NCB31CK-473X	CER.CAPACITOR	0.047	16V
C193	NCB31CK-473X	CER.CAPACITOR	0.047	16V
C194	NCB31CK-473X	CER.CAPACITOR	0.047	16V
C201	NCB31CK-473X	CER.CAPACITOR	0.047	16V
C202	NCB31CK-473X	CER.CAPACITOR	0.047	16V
C203	NCB31CK-473X	CER.CAPACITOR	0.047	16V
C204	NCB31CK-473X	CER.CAPACITOR	0.047	16V
C205	NCB31CK-473X	CER.CAPACITOR	0.047	16V
C206	NCB31CK-473X	CER.CAPACITOR	0.047	16V
C207	NCB31CK-473X	CER.CAPACITOR	0.047	16V
C208	NCB31CK-473X	CER.CAPACITOR	0.047	16V
C209	NCB31CK-473X	CER.CAPACITOR	0.047	16V
C210	NCB31CK-473X	CER.CAPACITOR	0.047	16V
C211	NCB31CK-473X	CER.CAPACITOR	0.047	16V
C212	NCB31CK-473X	CER.CAPACITOR	0.047	16V
C213	NCB31CK-473X	CER.CAPACITOR	0.047	16V
C215	NBE21AM-106X	TAN.CAPACITOR	10	10V
C216	NCB31CK-473X	CER.CAPACITOR	0.047	16V
C217	NCB31CK-473X	CER.CAPACITOR	0.047	16V
C218	NCB31CK-473X	CER.CAPACITOR	0.047	16V
C219	NCB31CK-473X	CER.CAPACITOR	0.047	16V
C220	NBE21AM-106X	TAN.CAPACITOR	10	10V
C221	NBE21AM-106X	TAN.CAPACITOR	10	10V
C222	NCB31CK-473X	CER.CAPACITOR	0.047	16V
C223	NCB31CK-473X	CER.CAPACITOR	0.047	16V
C224	NCB31CK-473X	CER.CAPACITOR	0.047	16V
C230	NBE21DM-475X	TAN.CAPACITOR	4.7	20V
C231	NDC31HJ-220X	CER.CAPACITOR	22p	50V
C232	NBE21DM-475X	TAN.CAPACITOR	4.7	20V
C233	NCB31CK-104X	CER.CAPACITOR	0.1	16V
C234	NCB31CK-473X	CER.CAPACITOR	0.047	16V
C235	NBQD1AM-686X	TAN.CAPACITOR	68	10V
C236	NCB31CK-473X	CER.CAPACITOR	0.047	16V
C237	NCB31CK-104X	CER.CAPACITOR	0.1	16V
C238	NDC31HJ-220X	CER.CAPACITOR	22p	50V
C239	NCB31CK-473X	CER.CAPACITOR	0.047	16V
C240	NCB31CK-473X	CER.CAPACITOR	0.047	16V
C241	NDC31HJ-220X	CER.CAPACITOR	22p	50V
C242	NCB31CK-473X	CER.CAPACITOR	0.047	16V
C243	NCB31CK-473X	CER.CAPACITOR	0.047	16V
C244	NDC31HJ-220X	CER.CAPACITOR	22p	50V
C245	NCB31CK-473X	CER.CAPACITOR	0.047	16V
C246	NCB31CK-473X	CER.CAPACITOR	0.047	16V
C247	NCB31CK-473X	CER.CAPACITOR	0.047	16V
C248	NCB31CK-473X	CER.CAPACITOR	0.047	16V
C250	NBE21DM-475X	TAN.CAPACITOR	4.7	20V
C251	NDC31HJ-220X	CER.CAPACITOR	22p	50V
C252	NBE21DM-475X	TAN.CAPACITOR	4.7	20V
C253	NDC31HJ-270X	CER.CAPACITOR	27p	50V
C254	NBE41CM-106X	TAN.CAPACITOR	10	16V
C255	NCB31CK-473X	CER.CAPACITOR	0.047	16V
C256	NCB31CK-473X	CER.CAPACITOR	0.047	16V
C257	NCB31CK-473X	CER.CAPACITOR	0.047	16V
C301	NBE21DM-475X	TAN.CAPACITOR	4.7	20V
C302	NDC31HJ-390X	CER.CAPACITOR	39p	50V
C303	NBE21AM-106X	TAN.CAPACITOR	10	10V
C304	NCB31CK-473X	CER.CAPACITOR	0.047	16V
C305	NCB31CK-473X	CER.CAPACITOR	0.047	16V
C306	NCB30JK-474X	CER.CAPACITOR	0.47	6.3V
C307	NCB30JK-474X	CER.CAPACITOR	0.47	6.3V
C308	NCB31CK-473X	CER.CAPACITOR	0.047	16V
C309	NCB30JK-474X	CER.CAPACITOR	0.47	6.3V
C310	NCB31CK-473X	CER.CAPACITOR	0.047	16V
C311	NCB31CK-473X	CER.CAPACITOR	0.047	16V
C312	NCB31CK-473X	CER.CAPACITOR	0.047	16V
C313	NCB31CK-473X	CER.CAPACITOR	0.047	16V
C314	NCB31CK-473X	CER.CAPACITOR	0.047	16V
C315	NCB31CK-473X	CER.CAPACITOR	0.047	16V
C316	NBE21AM-106X	TAN.CAPACITOR	10	10V
C317	NCB31CK-473X	CER.CAPACITOR	0.047	16V
C318	NCB31CK-473X	CER.CAPACITOR	0.047	16V
C319	NCB11CK-105X	CER.CAPACITOR	1	16V

6.15 JOG BOARD ASSEMBLY PARTS LIST 20

SCK2607-02-00B 20

Symbol No.	Part No.	Part Name	Description	
C401	NBE21DM-475X	TAN.CAPACITOR	4.7	20V
C402	NBE21DM-475X	TAN.CAPACITOR	4.7	20V
C403	NBE41AM-226X	TAN.CAPACITOR	22	10V
C404	NBE41AM-226X	TAN.CAPACITOR	22	10V
C405	NBE51EM-106X	TAN.CAPACITOR	10	25V
C406	NBE51EM-106X	TAN.CAPACITOR	10	25V
C407	NCB31CK-473X	CER.CAPACITOR	0.047	16V
C408	NCB31CK-473X	CER.CAPACITOR	0.047	16V
C409	NCB31CK-473X	CER.CAPACITOR	0.047	16V
C413	NDC31HJ-101X	CER.CAPACITOR	100p	50V
LC301	NQR0368-001X	LC FILTER		
CN1	QGB0805M3-60X	CONNECTOR	60PIN	
CN2	QGB0805M3-60X	CONNECTOR	60PIN	
CN5	QGA1201F2-04X	CONNECTOR	4PIN	
CN261	QGF0508F1-50X	CONNECTOR	50PIN	
CN262	QGF0508F1-50X	CONNECTOR	50PIN	
CN263	QGA1201F2-06X	CONNECTOR	6PIN	
CN264	QGA1201F2-02X	CONNECTOR	2PIN	
TP1	NNZ0009-001X	TEST POINT	TP1-4	
K101	NQR0269-004X	FERRITE BEADS	K101-413	
TB1	PGZ02228	EARTH LUG	TB1,2	

Symbol No.	Part No.	Part Name	Description	
IC951	TC7S14FU-X	I.C.(M)	TOSHIBA	
IC952	TC7SH00FU-X	I.C.(M)	TOSHIBA	
IC953	TC7SU04FU-X	I.C.(M)	TOSHIBA	
IC954	TC7W74FU-X	I.C.(M)	TOSHIBA	
IC955	TC7S14FU-X	I.C.(M)	TOSHIBA	
IC956	TC7S08FU-X	I.C.(M)	TOSHIBA	
R951	NRSA63J-223X	M.G.RESISTOR	22k	1/16W
R952	NRSA63J-103X	M.G.RESISTOR	10k	1/16W
R953	NRSA63J-103X	M.G.RESISTOR	10k	1/16W
R954	NRSA63J-103X	M.G.RESISTOR	10k	1/16W
R955	NRSA63J-101X	M.G.RESISTOR	100	1/16W
R956	NRSA63J-101X	M.G.RESISTOR	100	1/16W
R957	NRSA63J-103X	M.G.RESISTOR	10k	1/16W
R958	NRSA63J-0R0X	M.G.RESISTOR	0	1/16W
R960	NRSA63J-101X	M.G.RESISTOR	100	1/16W
R962	NRSA63J-101X	M.G.RESISTOR	100	1/16W
C951	NCB31HK-103X	CER.CAPACITOR	0.01	50V
C952	NCB31HK-103X	CER.CAPACITOR	0.01	50V
C953	NCB31CK-473X	CER.CAPACITOR	0.047	16V
C954	NCB31CK-473X	CER.CAPACITOR	0.047	16V
C955	NCB31CK-473X	CER.CAPACITOR	0.047	16V
C956	NCB31CK-473X	CER.CAPACITOR	0.047	16V
C957	NCB31CK-473X	CER.CAPACITOR	0.047	16V
C958	NCB31CK-473X	CER.CAPACITOR	0.047	16V
C959	NCB31CK-473X	CER.CAPACITOR	0.047	16V
C960	NBE41CM-106X	TAN.CAPACITOR	10	16V
C961	NCB31CK-473X	CER.CAPACITOR	0.047	16V
S951	NSW0010-001X	SWITCH	STATUS/MENU	
S952	QSW0603-001	ROTARY SWITCH	SHUTTER/MENU	
CN38	QGA1201F2-06X	CONNECTOR	6PIN	

6.16 IF BOARD ASSEMBLY PARTS LIST [2][1]

SCK2607-03-00B [2][1]□□□□□□□

Symbol No.	Part No.	Part Name	Description
IC301	M62353GP-X	I.C.(M)	MITSUBISHI
IC302	TA75S01F-X	I.C.(M)	TOSHIBA
IC303	TC7W66FU-X	I.C.(M)	TOSHIBA
D301	MA143A-X	DIODE	MATSUSHITA
D302	MA143A-X	DIODE	MATSUSHITA
D303	MA143A-X	DIODE	MATSUSHITA
D304	MA143A-X	DIODE	MATSUSHITA
D305	MA143A-X	DIODE	MATSUSHITA
D306	MA143A-X	DIODE	MATSUSHITA
D307	MA143A-X	DIODE	MATSUSHITA
D308	MA143A-X	DIODE	MATSUSHITA
D309	HZM18NB2-X	ZENER DIODE	HITACHI
R301	NRSA63J-103X	M.G.RESISTOR	10k 1/16W
R302	NRSA63J-104X	M.G.RESISTOR	100k 1/16W
R303	NRSA63J-334X	M.G.RESISTOR	330k 1/16W
R304	NRSA63J-124X	M.G.RESISTOR	120k 1/16W
R305	NRSA63J-101X	M.G.RESISTOR	100 1/16W
R306	NRSA63J-104X	M.G.RESISTOR	100k 1/16W
R311	NRSA63J-101X	M.G.RESISTOR	100 1/16W
R312	NRSA63J-101X	M.G.RESISTOR	100 1/16W
R313	NRSA63J-101X	M.G.RESISTOR	100 1/16W
R315	NRSA63J-101X	M.G.RESISTOR	100 1/16W
R316	NRSA63J-101X	M.G.RESISTOR	100 1/16W
R317	NRSA63J-102X	M.G.RESISTOR	1k 1/16W
R318	NRSA63J-101X	M.G.RESISTOR	100 1/16W
R320	NRSA63J-102X	M.G.RESISTOR	1k 1/16W
R321	NRSA63J-102X	M.G.RESISTOR	1k 1/16W
R322	NRSA63J-102X	M.G.RESISTOR	1k 1/16W
R323	NRSA63J-102X	M.G.RESISTOR	1k 1/16W
C301	NBE41CM-106X	TAN.CAPACITOR	10 16V
C302	NBE51VM-475X	TAN.CAPACITOR	4.7 35V
C303	NBE41CM-106X	TAN.CAPACITOR	10 16V
C304	NCB31CK-473X	CER.CAPACITOR	0.047 16V
C305	NCB31CK-473X	CER.CAPACITOR	0.047 16V
C306	NCB31CK-473X	CER.CAPACITOR	0.047 16V
C307	NCB31CK-473X	CER.CAPACITOR	0.047 16V
C308	NCB31CK-473X	CER.CAPACITOR	0.047 16V
C310	NEH91EM-106X	E.CAPACITOR	10 25V
C312	NCB31CK-473X	CER.CAPACITOR	0.047 16V
C313	NCB31CK-473X	CER.CAPACITOR	0.047 16V
C314	NCB31CK-473X	CER.CAPACITOR	0.047 16V
C315	NCB31CK-473X	CER.CAPACITOR	0.047 16V
CN23	QGF0508C1-30W	CONNECTOR	30PIN
CN31	QGA1201C2-10X	CONNECTOR	10PIN
CN35	SCV2477-010	CONNECTOR	10PIN
CN36	QGF0508C1-15W	CONNECTOR	15PIN
TP301	NNZ0022-001X	TEST POINT	TP301-306
TB1	PGZ02228	EARTH LUG	TB1,2

6.17 SWRU BOARD ASSEMBLY PARTS LIST [2][2]

SCK2607-04-00B [2][2]□□□□□□□

Symbol No.	Part No.	Part Name	Description
IC341	TC74VHC165FT-X	I.C.(M)	TOSHIBA
IC342	TC74VHC165FT-X	I.C.(M)	TOSHIBA
Q341	DTC124EUA-X	TRANSISTOR	ROHM
LD341	AA1102W-X	L.E.D.	FAS
R341	NRSA63J-223X	M.G.RESISTOR	22k 1/16W
R342	NRSA63J-223X	M.G.RESISTOR	22k 1/16W
R343	NRSA63J-471X	M.G.RESISTOR	470 1/16W
R344	NRSA63J-223X	M.G.RESISTOR	22k 1/16W
R345	NRSA63J-223X	M.G.RESISTOR	22k 1/16W
R346	NRSA63J-223X	M.G.RESISTOR	22k 1/16W
R347	NRSA63J-223X	M.G.RESISTOR	22k 1/16W
R348	NRSA63J-223X	M.G.RESISTOR	22k 1/16W
R349	NRSA63J-223X	M.G.RESISTOR	22k 1/16W
R350	NRSA63J-223X	M.G.RESISTOR	22k 1/16W
R351	NRSA63J-223X	M.G.RESISTOR	22k 1/16W
R353	NRSA63J-223X	M.G.RESISTOR	22k 1/16W
R354	NRSA63J-223X	M.G.RESISTOR	22k 1/16W
R355	NRSA63J-223X	M.G.RESISTOR	22k 1/16W
R356	NRSA63J-223X	M.G.RESISTOR	22k 1/16W
R357	NRSA63J-223X	M.G.RESISTOR	22k 1/16W
R358	NRSA63J-223X	M.G.RESISTOR	22k 1/16W
R359	NRSA63J-223X	M.G.RESISTOR	22k 1/16W
C342	NBE41CM-106X	TAN.CAPACITOR	10 16V
C343	NCB31CK-473X	CER.CAPACITOR	0.047 16V
C344	NCB31CK-473X	CER.CAPACITOR	0.047 16V
S341	NSW0070-002X	SLIDE SWITCH	AUTO IRIS
S342	NSW0010-001X	SWITCH	FULL AUTO
S343	NSW0070-002X	SLIDE SWITCH	BLACK
S344	NSW0010-001X	SWITCH	LOLUX
CN36	QGF0508F1-15X	CONNECTOR	15PIN
CN37	SCV2644-110X	CONNECTOR	10PIN
CN38	QGA1201F2-06X	CONNECTOR	6PIN
TB341	PGZ02228	EARTH LUG	TB341,342

6.18 SWF BOARD ASSEMBLY PARTS LIST 2 3

SCK2606-01-00B 2 3

Symbol No.	Part No.	Part Name	Description
IC321	TC74HC165AF-X	I.C.(M)	TOSHIBA
D321	MA143A-X	DIODE	MATSUSHITA
D322	MA143A-X	DIODE	MATSUSHITA
D324	MA143A-X	DIODE	MATSUSHITA
D325	MA143A-X	DIODE	MATSUSHITA
D329	MA143A-X	DIODE	MATSUSHITA
R321	NRSA02J-223X	M.G.RESISTOR	22k 1/10W
R322	NRSA02J-562X	M.G.RESISTOR	5.6k 1/10W
R323	NRSA02J-103X	M.G.RESISTOR	10k 1/10W
R324	NRSA02J-183X	M.G.RESISTOR	18k 1/10W
R325	NRSA02J-223X	M.G.RESISTOR	22k 1/10W
R326	NRSA02J-223X	M.G.RESISTOR	22k 1/10W
R327	NRSA02J-223X	M.G.RESISTOR	22k 1/10W
R328	NRSA02J-223X	M.G.RESISTOR	22k 1/10W
R329	NRSA02J-334X	M.G.RESISTOR	330k 1/10W
R330	NRSA02J-223X	M.G.RESISTOR	22k 1/10W
R331	NRSA02J-223X	M.G.RESISTOR	22k 1/10W
R332	NRSA02J-223X	M.G.RESISTOR	22k 1/10W
R333	NRSA02J-101X	M.G.RESISTOR	100 1/10W
R334	NRSA02J-222X	M.G.RESISTOR	2.2k 1/10W
VR301	QVQ0290-A14	VAL.RESISTOR	10k AUDIO LEV
C321	NCB21EK-473X	CER.CAPACITOR	0.047 25V
C322	NCB21EK-473X	CER.CAPACITOR	0.047 25V
C323	NCB21EK-473X	CER.CAPACITOR	0.047 25V
C324	NCB21EK-473X	CER.CAPACITOR	0.047 25V
C325	NBE41CM-106X	TAN.CAPACITOR	10 16V
S301	QSW0052-004	TOGGLE SWITCH	ACCU FOCUS/WHIT
S302	QSW0189-001Z	PUSH SWITCH	VTR TRIG
S303	QSW0052-005	TOGGLE SWITCH	ZEBRA/SKIN AREA
S304	QSW0189-001Z	PUSH SWITCH	TAKE
CN10	QGA1501F1-05	CONNECTOR	5PIN
CN35	QGF1004F1-10	CONNECTOR	10PIN

6.19 SWRM BOARD ASSEMBLY PARTS LIST 2 4

SCK2606-02-00B 2 4

Symbol No.	Part No.	Part Name	Description
D361	HZM6C-X	ZENER DIODE	HITACHI
D362	HZM6C-X	ZENER DIODE	HITACHI
D363	HZM6C-X	ZENER DIODE	HITACHI
D364	HZM6C-X	ZENER DIODE	HITACHI
D365	HZM6C-X	ZENER DIODE	HITACHI
D366	HZM6C-X	ZENER DIODE	HITACHI
D367	HZM6C-X	ZENER DIODE	HITACHI
R361	NRSA02J-222X	M.G.RESISTOR	2.2k 1/10W
R362	NRSA02J-222X	M.G.RESISTOR	2.2k 1/10W
R363	NRSA02J-222X	M.G.RESISTOR	2.2k 1/10W
R364	NRSA02J-222X	M.G.RESISTOR	2.2k 1/10W
R365	NRSA02J-222X	M.G.RESISTOR	2.2k 1/10W
R366	NRSA02J-222X	M.G.RESISTOR	2.2k 1/10W
R367	NRSA02J-222X	M.G.RESISTOR	2.2k 1/10W
S361	QSW0048-001	TOGGLE SWITCH	VTR
S362	QSW0052-001	TOGGLE SWITCH	GAIN
S363	QSW0049-001	TOGGLE SWITCH	OUTPUT
S364	QSW0049-001	TOGGLE SWITCH	WHITE BAL
CN37	QGF1004F1-10	CONNECTOR	10PIN
CN40	QGA1501F1-03	CONNECTOR	3PIN

6.20 SWRB BOARD ASSEMBLY PARTS LIST 2 5

SCK2606-03-00B 2 5

Symbol No.	Part No.	Part Name	Description
C381	NCB21EK-473X	CER.CAPACITOR	0.047 25V
S381	QSW0189-001Z	PUSH SWITCH	NG
CN39	QGA1501F1-02	CONNECTOR	2PIN

6.21 SWPW BOARD ASSEMBLY PARTS LIST [2][6]

SCK2606-05-00B [2][6]□□□□□□

Symbol No.	Part No.	Part Name	Description
D391	HZM6C-X	ZENER DIODE	HITACHI
R391	NRSA02J-222X	M.G.RESISTOR	2.2k 1/10W
S391	QSW0046-001	TOGGLE SWITCH	POWER
CN39	QGA1501C1-02	CONNECTOR	2PIN
CN40	QGA1501C1-03	CONNECTOR	3PIN

6.22 MIC BOARD ASSEMBLY PARTS LIST [2][7]

SCK2606-06-00B [2][7]□□□□□□

Symbol No.	Part No.	Part Name	Description
R396	NRSA02J-0R0X	M.G.RESISTOR	0 1/10W
R397	NRSA02J-0R0X	M.G.RESISTOR	0 1/10W
C398	NDC21HJ-221X	CER.CAPACITOR	220p 50V
C399	NDC21HJ-221X	CER.CAPACITOR	220p 50V
C1303	NDC21HJ-221X	CER.CAPACITOR	220p 50V
C1304	NDC21HJ-221X	CER.CAPACITOR	220p 50V
L396	NQL124J-101X	COIL	100uH
L397	NQL124J-101X	COIL	100uH
J396	QNZ0414-001	CONNECTOR	
CN33	QGA1501C1-03	CONNECTOR	3PIN
K396	NQR0351-001X	FERRITE BEADS	K396,397
K397	NQR0351-001X	FERRITE BEADS	

6.23 BNC BOARD ASSEMBLY PARTS LIST (MAIN UNIT) [2][8]

SCK2606-07-00B [2][8]□□□□□□

Symbol No.	Part No.	Part Name	Description
R399	NRSA02J-750X	M.G.RESISTOR	75 1/10W
CN34	QGA1501C1-04	CONNECTOR	4PIN
K1301	NRSA02J-0R0X	M.G.RESISTOR	0 1/10W
K1302	NRSA02J-0R0X	M.G.RESISTOR	0 1/10W

6.24 SS/CP BOARD ASSEMBLY PARTS LIST [3][1]

CK2632U0B(U)

CK2632E0B(E) [3][1]□□□□□□

Symbol No.	Part No.	Part Name	Description
IC401	UPD784031GK-BE9	I.C.(M)	NEC
IC402	TC74VHC373FT-X	I.C.(M)	TOSHIBA
SK403	SCV2768-001X	IC SOCKET	FOR IC403
IC403	PLSL1104	I.C.(M)	SST27SF020-70NH
IC404	IS62C256-70U-X	I.C.(M)	INTEGRATED SILI
IC405	UPD71055GB-10	I.C.(M)	NEC
IC406	TC74VHC139FT-X	I.C.(M)	TOSHIBA
IC410	TC74VHC244FT-X	I.C.(M)	TOSHIBA
IC411	TC7W04FU-X	I.C.(M)	TOSHIBA
IC412	TC74VHC74FT-X	I.C.(M)	TOSHIBA
IC413	TC74VHC125FT-X	I.C.(M)	TOSHIBA
IC414	TC7W04FU-X	I.C.(M)	TOSHIBA
IC415	X24645S8-2.7-X	I.C.(M)	XICOR
IC416	M51957BFP-X	I.C.(M)	MITSUBISHI
IC417	TC7S14FU-X	I.C.(M)	TOSHIBA
IC418	TC7S14FU-X	I.C.(M)	TOSHIBA
IC419	TC74VHC125FT-X	I.C.(M)	TOSHIBA
IC420	TC7SH04FU-X	I.C.(M)	TOSHIBA
IC901	MB90T678BPF	I.C.(M)	FUJITSU
SK902	SCV2768-001X	IC SOCKET	FOR IC902
IC902	PLSC1360	I.C.(M)	SST27SF020-70NH
IC903	IS62C256-70U-X	I.C.(M)	INTEGRATED SILI
IC904	TC74VHC373FT-X	I.C.(M)	TOSHIBA
IC905	NM93C86AEM8-X	I.C.(M)	NATIONAL SEMICO
IC906	MN12821-QR-X	I.C.(M)	MATSUSHITA
IC907	TC7SH08FU-X	I.C.(M)	TOSHIBA
IC909	TC74VHC157FT-X	I.C.(M)	TOSHIBA
IC910	TC74VHC165FT-X	I.C.(M)	TOSHIBA
IC911	BU4094BCFV-X	I.C.(M)	ROHM
IC912	TC74VHC04FT-X	I.C.(M)	TOSHIBA
IC915	TC74VHC10FT-X	I.C.(M)	TOSHIBA
IC916	TC74VHC541FT-X	I.C.(M)	TOSHIBA
IC917	AN77L05M-X	I.C.(M)	MATSUSHITA
IC918	ST16C2550CQ48	I.C.(M)	EXAR
IC919	NJU7231U33-X	I.C.(M)	JRC
IC920	TC7WT241FU-X	I.C.(M)	TOSHIBA
Q401	DTC124EUA-X	TRANSISTOR	ROHM
Q402	DTC124EUA-X	TRANSISTOR	ROHM
Q403	DTA114EUA-X	TRANSISTOR	ROHM
Q404	DTC124EUA-X	TRANSISTOR	ROHM
D401	DAN202U-X	DIODE	ROHM
D402	MA8100/L/-X	ZENER DIODE	MATSUSHITA
D403	DAN202U-X	DIODE	ROHM
D404	DAN202U-X	DIODE	ROHM
R401	NRSA63J-101X	M.G.RESISTOR	100 1/16W
R402	NRSA63J-101X	M.G.RESISTOR	100 1/16W
R403	NRSA63J-101X	M.G.RESISTOR	100 1/16W
R404	NRSA63J-101X	M.G.RESISTOR	100 1/16W
R405	NRSA63J-333X	M.G.RESISTOR	33k 1/16W
R406	NRSA63J-101X	M.G.RESISTOR	100 1/16W
R407	NRSA63J-104X	M.G.RESISTOR	100k 1/16W
R408	NRSA63J-104X	M.G.RESISTOR	100k 1/16W
R409	NRSA63J-101X	M.G.RESISTOR	100 1/16W
R410	NRSA63J-101X	M.G.RESISTOR	100 1/16W
R411	NRSA63J-101X	M.G.RESISTOR	100 1/16W
R412	NRSA63J-223X	M.G.RESISTOR	22k 1/16W
R413	NRSA63J-223X	M.G.RESISTOR	22k 1/16W
R414	NRSA63J-333X	M.G.RESISTOR	33k 1/16W
R415	NRSA63J-333X	M.G.RESISTOR	33k 1/16W
R416	NRSA63J-104X	M.G.RESISTOR	100k 1/16W
R417	NRSA63J-104X	M.G.RESISTOR	100k 1/16W
R418	NRSA63J-104X	M.G.RESISTOR	100k 1/16W
R419	NRSA63J-104X	M.G.RESISTOR	100k 1/16W

Symbol No.	Part No.	Part Name	Description	
R421	NRSA63J-104X	M.G.RESISTOR	100k	1/16W (E)
R422	NRSA63J-101X	M.G.RESISTOR	100	1/16W
R423	NRSA63J-101X	M.G.RESISTOR	100	1/16W
R424	NRSA63J-101X	M.G.RESISTOR	100	1/16W
R425	NRSA63J-102X	M.G.RESISTOR	1k	1/16W
R426	NRSA63J-0R0X	M.G.RESISTOR	0	1/16W
R427	NRSA63J-0R0X	M.G.RESISTOR	0	1/16W
R428	NRSA63J-0R0X	M.G.RESISTOR	0	1/16W
R429	NRSA63J-101X	M.G.RESISTOR	100	1/16W
R430	NRSA63J-101X	M.G.RESISTOR	100	1/16W
R431	NRSA63J-0R0X	M.G.RESISTOR	0	1/16W
R432	NRSA63D-822X	M.G.RESISTOR	8.2k	1/16W
R433	NRSA63D-102X	M.G.RESISTOR	1k	1/16W
R434	NRSA63D-681X	M.G.RESISTOR	680	1/16W
R436	NRSA63J-105X	M.G.RESISTOR	1M	1/16W
R437	NRSA63J-471X	M.G.RESISTOR	470	1/16W
R439	NRSA63J-333X	M.G.RESISTOR	33k	1/16W
R440	NRSA63J-103X	M.G.RESISTOR	10k	1/16W
R441	NRSA63J-333X	M.G.RESISTOR	33k	1/16W
R442	NRSA63J-333X	M.G.RESISTOR	33k	1/16W
R443	NRSA63J-101X	M.G.RESISTOR	100	1/16W
R444	NRSA63J-101X	M.G.RESISTOR	100	1/16W
R445	NRSA63J-101X	M.G.RESISTOR	100	1/16W
R446	NRSA63J-101X	M.G.RESISTOR	100	1/16W
R448	NRSA63J-104X	M.G.RESISTOR	100k	1/16W
R449	NRSA63J-101X	M.G.RESISTOR	100	1/16W
R450	NRSA63J-101X	M.G.RESISTOR	100	1/16W
R451	NRSA63J-101X	M.G.RESISTOR	100	1/16W
R456	NRSA63J-101X	M.G.RESISTOR	100	1/16W
R457	NRSA63J-101X	M.G.RESISTOR	100	1/16W
R458	NRSA63J-101X	M.G.RESISTOR	100	1/16W
R459	NRSA63J-101X	M.G.RESISTOR	100	1/16W
R460	NRSA63J-101X	M.G.RESISTOR	100	1/16W
R461	NRSA63J-101X	M.G.RESISTOR	100	1/16W
R462	NRSA63J-101X	M.G.RESISTOR	100	1/16W
R463	NRSA63J-101X	M.G.RESISTOR	100	1/16W
R464	NRSA63J-101X	M.G.RESISTOR	100	1/16W
R465	NRSA63J-101X	M.G.RESISTOR	100	1/16W
R467	NRSA63J-101X	M.G.RESISTOR	100	1/16W
R468	NRSA63J-333X	M.G.RESISTOR	33k	1/16W
R469	NRSA63J-101X	M.G.RESISTOR	100	1/16W
R470	NRSA63J-101X	M.G.RESISTOR	100	1/16W
R474	NRSA63J-0R0X	M.G.RESISTOR	0	1/16W
R475	NRSA63J-222X	M.G.RESISTOR	2.2k	1/16W
R476	NRSA63J-333X	M.G.RESISTOR	33k	1/16W
R477	NRSA63J-333X	M.G.RESISTOR	33k	1/16W
R478	NRSA63J-333X	M.G.RESISTOR	33k	1/16W
R479	NRSA63J-333X	M.G.RESISTOR	33k	1/16W
R480	NRSA63J-333X	M.G.RESISTOR	33k	1/16W
R481	NRSA63J-333X	M.G.RESISTOR	33k	1/16W
R482	NRSA63J-333X	M.G.RESISTOR	33k	1/16W
R483	NRSA63J-333X	M.G.RESISTOR	33k	1/16W
R484	NRSA63J-333X	M.G.RESISTOR	33k	1/16W
R485	NRSA63J-333X	M.G.RESISTOR	33k	1/16W
R486	NRSA63J-333X	M.G.RESISTOR	33k	1/16W
R487	NRSA63J-333X	M.G.RESISTOR	33k	1/16W
R488	NRSA63J-333X	M.G.RESISTOR	33k	1/16W
R489	NRSA63J-333X	M.G.RESISTOR	33k	1/16W
R490	NRSA63J-333X	M.G.RESISTOR	33k	1/16W
R491	NRSA63J-333X	M.G.RESISTOR	33k	1/16W
R492	NRSA63J-333X	M.G.RESISTOR	33k	1/16W
R493	NRSA63J-333X	M.G.RESISTOR	33k	1/16W
R494	NRSA63J-104X	M.G.RESISTOR	100k	1/16W
R495	NRSA63J-101X	M.G.RESISTOR	100	1/16W
R496	NRSA63J-104X	M.G.RESISTOR	100k	1/16W
R497	NRSA63J-0R0X	M.G.RESISTOR	0	1/16W
R498	NRSA63J-101X	M.G.RESISTOR	100	1/16W
R499	NRSA63J-101X	M.G.RESISTOR	100	1/16W
R500	NRSA63J-101X	M.G.RESISTOR	100	1/16W
R504	NRSA63J-0R0X	M.G.RESISTOR	0	1/16W
R505	NRSA63J-0R0X	M.G.RESISTOR	0	1/16W
R506	NRSA63D-272X	M.G.RESISTOR	2.7k	1/16W

Symbol No.	Part No.	Part Name	Description	
R508	NRSA63J-104X	M.G.RESISTOR	100k	1/16W
R509	NRSA63J-104X	M.G.RESISTOR	100k	1/16W (U)
R510	NRSA63J-0R0X	M.G.RESISTOR	0	1/16W
R511	NRSA63J-104X	M.G.RESISTOR	100k	1/16W
R513	NRSA63J-0R0X	M.G.RESISTOR	0	1/16W
R515	NRSA63J-101X	M.G.RESISTOR	100	1/16W
R516	NRSA63J-101X	M.G.RESISTOR	100	1/16W
R517	NRSA63J-101X	M.G.RESISTOR	100	1/16W
R526	NRSA63J-103X	M.G.RESISTOR	10k	1/16W
R527	NRSA63J-473X	M.G.RESISTOR	47k	1/16W
R528	NRSA63J-223X	M.G.RESISTOR	22k	1/16W
R529	NRSA63J-103X	M.G.RESISTOR	10k	1/16W
R530	NRSA63J-103X	M.G.RESISTOR	10k	1/16W
R531	NRSA63J-102X	M.G.RESISTOR	1k	1/16W
R533	NRSA63J-104X	M.G.RESISTOR	100k	1/16W
R534	NRSA63J-104X	M.G.RESISTOR	100k	1/16W
R536	NRSA63J-223X	M.G.RESISTOR	22k	1/16W
R537	NRSA63J-223X	M.G.RESISTOR	22k	1/16W
R538	NRSA63J-223X	M.G.RESISTOR	22k	1/16W
R539	NRSA63J-103X	M.G.RESISTOR	10k	1/16W
R540	NRSA63J-333X	M.G.RESISTOR	33k	1/16W
R902	NRSA63J-101X	M.G.RESISTOR	100	1/16W
R903	NRSA63J-101X	M.G.RESISTOR	100	1/16W
R904	NRSA63J-101X	M.G.RESISTOR	100	1/16W
R905	NRSA63J-101X	M.G.RESISTOR	100	1/16W
R906	NRSA63J-392X	M.G.RESISTOR	3.9k	1/16W
R907	NRSA63J-622X	M.G.RESISTOR	6.2k	1/16W
R908	NRSA63J-392X	M.G.RESISTOR	3.9k	1/16W
R909	NRSA63J-622X	M.G.RESISTOR	6.2k	1/16W
R910	NRSA63J-101X	M.G.RESISTOR	100	1/16W
R911	NRSA63J-101X	M.G.RESISTOR	100	1/16W
R912	NRSA63J-101X	M.G.RESISTOR	100	1/16W
R913	NRSA63J-101X	M.G.RESISTOR	100	1/16W
R914	NRSA63J-0R0X	M.G.RESISTOR	0	1/16W
R915	NRSA63J-101X	M.G.RESISTOR	100	1/16W
R916	NRSA63J-0R0X	M.G.RESISTOR	0	1/16W
R917	NRSA63J-101X	M.G.RESISTOR	100	1/16W
R918	NRSA63J-101X	M.G.RESISTOR	100	1/16W
R919	NRSA63J-101X	M.G.RESISTOR	100	1/16W
R920	NRSA63J-101X	M.G.RESISTOR	100	1/16W
R921	NRSA63J-101X	M.G.RESISTOR	100	1/16W
R922	NRSA63J-101X	M.G.RESISTOR	100	1/16W
R923	NRSA63J-101X	M.G.RESISTOR	100	1/16W
R924	NRSA63J-101X	M.G.RESISTOR	100	1/16W
R925	NRSA63J-101X	M.G.RESISTOR	100	1/16W
R926	NRSA63J-101X	M.G.RESISTOR	100	1/16W
R927	NRSA63J-101X	M.G.RESISTOR	100	1/16W
R928	NRSA63J-101X	M.G.RESISTOR	100	1/16W
R929	NRSA63J-101X	M.G.RESISTOR	100	1/16W
R930	NRSA63J-101X	M.G.RESISTOR	100	1/16W
R931	NRSA63J-101X	M.G.RESISTOR	100	1/16W
R932	NRSA63J-101X	M.G.RESISTOR	100	1/16W
R933	NRSA63J-101X	M.G.RESISTOR	100	1/16W
R934	NRSA63J-101X	M.G.RESISTOR	100	1/16W
R935	NRSA63J-101X	M.G.RESISTOR	100	1/16W
R936	NRSA63J-101X	M.G.RESISTOR	100	1/16W
R937	NRSA63J-101X	M.G.RESISTOR	100	1/16W
R938	NRSA63J-101X	M.G.RESISTOR	100	1/16W
R939	NRSA63J-101X	M.G.RESISTOR	100	1/16W
R940	NRSA63J-101X	M.G.RESISTOR	100	1/16W
R941	NRSA63J-101X	M.G.RESISTOR	100	1/16W
R942	NRSA63J-223X	M.G.RESISTOR	22k	1/16W
R943	NRSA63J-103X	M.G.RESISTOR	10k	1/16W
R944	NRSA63J-223X	M.G.RESISTOR	22k	1/16W
R945	NRSA63J-223X	M.G.RESISTOR	22k	1/16W
R946	NRSA63J-223X	M.G.RESISTOR	22k	1/16W
R947	NRSA63J-332X	M.G.RESISTOR	3.3k	1/16W
R948	NRSA63J-102X	M.G.RESISTOR	1k	1/16W
R949	NRSA63J-102X	M.G.RESISTOR	1k	1/16W
R950	NRSA63J-105X	M.G.RESISTOR	1M	1/16W
R951	NRSA63J-223X	M.G.RESISTOR	22k	1/16W
R952	NRSA63J-223X	M.G.RESISTOR	22k	1/16W
R953	NRSA63J-223X	M.G.RESISTOR	22k	1/16W

[SS/CP]

Symbol No.	Part No.	Part Name	Description
R954	NRSA63J-223X	M.G.RESISTOR	22k 1/16W
R955	NRSA63J-223X	M.G.RESISTOR	22k 1/16W
R956	NRSA63J-223X	M.G.RESISTOR	22k 1/16W
R957	NRSA63J-223X	M.G.RESISTOR	22k 1/16W
R958	NRSA63J-223X	M.G.RESISTOR	22k 1/16W
R959	NRSA63J-223X	M.G.RESISTOR	22k 1/16W
R960	NRSA63J-105X	M.G.RESISTOR	1M 1/16W
R961	NRSA63J-223X	M.G.RESISTOR	22k 1/16W
R962	NRSA63J-223X	M.G.RESISTOR	22k 1/16W
R963	NRSA63J-223X	M.G.RESISTOR	22k 1/16W
R964	NRSA63J-223X	M.G.RESISTOR	22k 1/16W
R965	NRSA63J-223X	M.G.RESISTOR	22k 1/16W
R966	NRSA63J-223X	M.G.RESISTOR	22k 1/16W
R967	NRSA63J-223X	M.G.RESISTOR	22k 1/16W
R968	NRSA63J-223X	M.G.RESISTOR	22k 1/16W
R969	NRSA63J-223X	M.G.RESISTOR	22k 1/16W
R970	NRSA63J-223X	M.G.RESISTOR	22k 1/16W
R971	NRSA63J-223X	M.G.RESISTOR	22k 1/16W
R972	NRSA63J-223X	M.G.RESISTOR	22k 1/16W
R973	NRSA63J-223X	M.G.RESISTOR	22k 1/16W
R974	NRSA63J-0R0X	M.G.RESISTOR	0 1/16W
R975	NRSA63J-562X	M.G.RESISTOR	5.6k 1/16W (U)
	NRSA63D-562X	M.G.RESISTOR	5.6k 1/16W (E)
R976	NRSA63J-472X	M.G.RESISTOR	4.7k 1/16W
R977	NRSA63J-472X	M.G.RESISTOR	4.7k 1/16W
R978	NRSA63J-223X	M.G.RESISTOR	22k 1/16W
R979	NRSA63J-223X	M.G.RESISTOR	22k 1/16W
R980	NRSA63J-223X	M.G.RESISTOR	22k 1/16W
C401	NDC31HJ-8R0X	CER.CAPACITOR	8p 50V
C402	NDC31HJ-8R0X	CER.CAPACITOR	8p 50V
C403	NCB31CK-473X	CER.CAPACITOR	0.047 16V
C404	NCB31CK-473X	CER.CAPACITOR	0.047 16V
C405	NCB31CK-473X	CER.CAPACITOR	0.047 16V
C406	NCB31CK-473X	CER.CAPACITOR	0.047 16V
C407	NCB31CK-473X	CER.CAPACITOR	0.047 16V
C408	NCB31CK-473X	CER.CAPACITOR	0.047 16V
C410	NCB31CK-473X	CER.CAPACITOR	0.047 16V
C411	NCB31CK-473X	CER.CAPACITOR	0.047 16V
C412	NCB31CK-473X	CER.CAPACITOR	0.047 16V
C413	NCB31CK-473X	CER.CAPACITOR	0.047 16V
C414	NCB31CK-473X	CER.CAPACITOR	0.047 16V
C415	NCB31CK-473X	CER.CAPACITOR	0.047 16V
C417	NCB31CK-473X	CER.CAPACITOR	0.047 16V
C420	NCB41CM-106X	CER.CAPACITOR	10 16V
C421	NCB41CM-106X	CER.CAPACITOR	10 16V
C422	NDC31HJ-101X	CER.CAPACITOR	100p 50V
C423	NDC31HJ-101X	CER.CAPACITOR	100p 50V
C424	NDC31HJ-101X	CER.CAPACITOR	100p 50V
C425	NCB31EK-103X	CER.CAPACITOR	0.01 25V
C426	NCB31CK-104X	CER.CAPACITOR	0.1 16V
C427	NCB31CK-473X	CER.CAPACITOR	0.047 16V
C428	NCB31CK-473X	CER.CAPACITOR	0.047 16V
C429	NCB31CK-473X	CER.CAPACITOR	0.047 16V
C430	NCB31CK-473X	CER.CAPACITOR	0.047 16V
C431	NCB31CK-473X	CER.CAPACITOR	0.047 16V
C901	NCB31CK-473X	CER.CAPACITOR	0.047 16V
C902	NCB31CK-473X	CER.CAPACITOR	0.047 16V
C903	NCB31EK-473X	CER.CAPACITOR	0.047 25V
C904	NBE41CM-106X	TAN.CAPACITOR	10 16V
C905	NCB31CK-473X	CER.CAPACITOR	0.047 16V
C906	NCB31CK-473X	CER.CAPACITOR	0.047 16V
C907	NCB31CK-473X	CER.CAPACITOR	0.047 16V
C909	NCB31CK-473X	CER.CAPACITOR	0.047 16V
C910	NCB31CK-473X	CER.CAPACITOR	0.047 16V
C911	NCB31CK-473X	CER.CAPACITOR	0.047 16V
C912	NCB31CK-473X	CER.CAPACITOR	0.047 16V
C913	NCB31CK-473X	CER.CAPACITOR	0.047 16V
C914	NCB31CK-473X	CER.CAPACITOR	0.047 16V
C915	NCB31CK-473X	CER.CAPACITOR	0.047 16V
C916	NCB31CK-473X	CER.CAPACITOR	0.047 16V
C917	NCB31CK-473X	CER.CAPACITOR	0.047 16V

Symbol No.	Part No.	Part Name	Description
C918	NBE21AM-106X	TAN.CAPACITOR	10 10V
C919	NCB31CK-473X	CER.CAPACITOR	0.047 16V
C920	NCB31CK-473X	CER.CAPACITOR	0.047 16V
C921	NCB31CK-473X	CER.CAPACITOR	0.047 16V
C922	NCB31CK-473X	CER.CAPACITOR	0.047 16V
C923	NCB31CK-473X	CER.CAPACITOR	0.047 16V
L401	NQL024J-100X	COIL	10uH
X401	NAX0320-001X	CRYSTAL	31.9388MHz
X901	NAX0061-001X	CRYSTAL	4MHz
X902	NAX0066-001X	CRYSTAL	7.373MHz
S901	NSW0022-004X	DIP SWITCH	FUNCTION SET
CN101	QGF0508F1-50X	CONNECTOR	50PIN
CN401	QGF0508F1-40X	CONNECTOR	40PIN
CN604	QGF0508F2-20X	CONNECTOR	20PIN
TP401	NNZ0009-001X	TEST POINT	TP401-908
K401	PGZ00627Z	FERRATE BEADS	K401,402
TB1	PGZ02228	EARTH LUG	TB1,2

6.25 AUDIO/LCD BOARD ASSEMBLY PARTS LIST 3 2

CK2635U0A(U)

CK2635E0A(E) 3 2

Symbol No.	Part No.	Part Name	Description
IC202	TC4W53F-X	I.C.(M)	TOSHIBA
IC203	TC4W53F-X	I.C.(M)	TOSHIBA
IC204	NJM2068M-D-X	I.C.(M)	JRC
IC205	NJM2068M-D-X	I.C.(M)	JRC
IC206	BA3314F-X	I.C.(M)	ROHM
IC207	BA3314F-X	I.C.(M)	ROHM
IC208	TC4051BF-X	I.C.(M)	TOSHIBA
IC209	TC4051BF-X	I.C.(M)	TOSHIBA
IC220	NJM2068M-D-X	I.C.(M)	JRC
IC221	NJM2068M-D-X	I.C.(M)	JRC
IC222	TC4S66F-X	I.C.(M)	TOSHIBA
IC223	TC4S66F-X	I.C.(M)	TOSHIBA
IC281	TC4W53F-X	I.C.(M)	TOSHIBA
IC282	NJM2904M-X	I.C.(M)	JRC
IC283	TC4S66F-X	I.C.(M)	TOSHIBA
IC301	M5201FP-X	I.C.(M)	MITSUBISHI
IC302	M5201FP-X	I.C.(M)	MITSUBISHI
IC303	M5216FP-X	I.C.(M)	MITSUBISHI
IC304	M5218AFP-X	I.C.(M)	MITSUBISHI
IC305	TC4W53F-X	I.C.(M)	TOSHIBA
IC306	TC4S66F-X	I.C.(M)	TOSHIBA
IC307	TC4S66F-X	I.C.(M)	TOSHIBA
IC308	TC4S66F-X	I.C.(M)	TOSHIBA
IC309	TC4S66F-X	I.C.(M)	TOSHIBA
IC400	EPM3032AT10-002	I.C.(M)	ALTERA
IC401	S-81233SGUP-X	I.C.(M)	SEIKO
IC402	AN77L05M-X	I.C.(M)	MATSUSHITA
IC601	UPD78F0058GC001	I.C.(M)	NEC, CPU
IC602	NJU6433FB2	I.C.(M)	JRC
IC603	TC7S66FU-X	I.C.(M)	TOSHIBA
IC604	TC7SU04FU-X	I.C.(M)	TOSHIBA
IC605	TC7WH126FU-X	I.C.(M)	TOSHIBA
IC607	TC74VHC123AFT-X	I.C.(M)	TOSHIBA
IC608	TC7W74FU-X	I.C.(M)	TOSHIBA
IC609	TC7SH08FU-X	I.C.(M)	TOSHIBA
IC610	NJM319M-X	I.C.(M)	JRC
IC611	NJM4556AM-X	I.C.(M)	JRC
IC612	TC4053BFT-X	I.C.(M)	TOSHIBA
IC615	BA6138F-X	I.C.(M)	ROHM
IC616	S-80840ANNP-W	I.C.(M)	SEIKO
IC618	S-8423LFS-X	I.C.(M)	SEIKO
Q201	DTC124EUA-X	TRANSISTOR	ROHM
Q202	DTC124EUA-X	TRANSISTOR	ROHM
Q203	DTC144EUA-X	TRANSISTOR	ROHM
Q204	DTC144EUA-X	TRANSISTOR	ROHM
Q205	DTC144EUA-X	TRANSISTOR	ROHM
Q206	DTC144EUA-X	TRANSISTOR	ROHM
Q207	DTC144EUA-X	TRANSISTOR	ROHM
Q208	DTA124EUA-X	TRANSISTOR	ROHM
Q209	DTC144EUA-X	TRANSISTOR	ROHM
Q210	DTA124EUA-X	TRANSISTOR	ROHM
Q301	FMW3-X	TRANSISTOR	ROHM
Q302	2SD601A/QRS/-X	TRANSISTOR	MATSUSHITA
Q303	2SD601A/QRS/-X	TRANSISTOR	MATSUSHITA
Q309	FMW3-X	TRANSISTOR	ROHM
Q310	DTC124EUA-X	TRANSISTOR	ROHM
Q311	2SJ279S-X	FET	HITACHI
Q321	DTC144EUA-X	TRANSISTOR	ROHM
Q322	DTA114EUA-X	TRANSISTOR	ROHM
Q361	DTC144EUA-X	TRANSISTOR	ROHM
Q601	DTA124EUA-X	TRANSISTOR	ROHM
Q602	DTC124EUA-X	TRANSISTOR	ROHM
Q620	DTC124EUA-X	TRANSISTOR	ROHM
Q621	DTC124EUA-X	TRANSISTOR	ROHM
Q622	DTA124EUA-X	TRANSISTOR	ROHM
Q623	DTA124EUA-X	TRANSISTOR	ROHM
D601	DA204U-X	DIODE	ROHM
D602	DA204U-X	DIODE	ROHM
D603	MA3024-X	ZENER DIODE	MATSUSHITA
D604	MA3024-X	ZENER DIODE	MATSUSHITA

Symbol No.	Part No.	Part Name	Description
D605	DAN202U-X	DIODE	ROHM
D606	DAN202U-X	DIODE	ROHM
D607	DAN202U-X	DIODE	ROHM
LD601	TLSG208	L.E.D.	
LD602	QLD0092-001	L.C.DISPLAY	
PC201	P873-25	I.C(PH COUPLER)	
R201	NRSA63J-0R0X	M.G.RESISTOR	0 1/16W
R205	NRSA63J-100X	M.G.RESISTOR	10 1/16W
R206	NRSA63J-100X	M.G.RESISTOR	10 1/16W
R207	NRSA63J-104X	M.G.RESISTOR	100k 1/16W
R208	NRSA63J-104X	M.G.RESISTOR	100k 1/16W
R211	NRSA63J-104X	M.G.RESISTOR	100k 1/16W
R212	NRSA63J-104X	M.G.RESISTOR	100k 1/16W
R215	NRSA63J-123X	M.G.RESISTOR	12k 1/16W
R216	NRSA63J-392X	M.G.RESISTOR	3.9k 1/16W
R217	NRSA63J-102X	M.G.RESISTOR	1k 1/16W
R218	NRSA63J-332X	M.G.RESISTOR	3.3k 1/16W
R219	NRSA63J-392X	M.G.RESISTOR	3.9k 1/16W
R220	NRSA63J-392X	M.G.RESISTOR	3.9k 1/16W
R221	NRSA63J-182X	M.G.RESISTOR	1.8k 1/16W
R222	NRSA63J-182X	M.G.RESISTOR	1.8k 1/16W
R223	NRSA63J-471X	M.G.RESISTOR	470 1/16W
R224	NRSA63J-471X	M.G.RESISTOR	470 1/16W
R225	NRSA63J-102X	M.G.RESISTOR	1k 1/16W
R226	NRSA63J-102X	M.G.RESISTOR	1k 1/16W
R227	NRSA63J-103X	M.G.RESISTOR	10k 1/16W
R228	NRSA63J-103X	M.G.RESISTOR	10k 1/16W
R230	NRSA63J-104X	M.G.RESISTOR	100k 1/16W
R232	NRSA63J-0R0X	M.G.RESISTOR	0 1/16W
R234	NRSA63J-0R0X	M.G.RESISTOR	0 1/16W
R235	NRSA63J-0R0X	M.G.RESISTOR	0 1/16W
R236	NRSA63J-0R0X	M.G.RESISTOR	0 1/16W
R237	NRSA63J-104X	M.G.RESISTOR	100k 1/16W
R239	NRSA63J-103X	M.G.RESISTOR	10k 1/16W
R240	NRSA63J-183X	M.G.RESISTOR	18k 1/16W
R241	NRSA63J-183X	M.G.RESISTOR	18k 1/16W
R242	NRSA63J-103X	M.G.RESISTOR	10k 1/16W
R243	NRSA63J-153X	M.G.RESISTOR	15k 1/16W
R244	NRSA63J-472X	M.G.RESISTOR	4.7k 1/16W
R245	NRSA63J-183X	M.G.RESISTOR	18k 1/16W
R246	NRSA63J-562X	M.G.RESISTOR	5.6k 1/16W
R247	NRSA63J-562X	M.G.RESISTOR	5.6k 1/16W
R248	NRSA63J-182X	M.G.RESISTOR	1.8k 1/16W
R249	NRSA63J-392X	M.G.RESISTOR	3.9k 1/16W
R250	NRSA63J-392X	M.G.RESISTOR	3.9k 1/16W
R251	NRSA63J-182X	M.G.RESISTOR	1.8k 1/16W
R252	NRSA63J-182X	M.G.RESISTOR	1.8k 1/16W
R253	NRSA63J-225X	M.G.RESISTOR	2.2M 1/16W
R254	NRSA63J-225X	M.G.RESISTOR	2.2M 1/16W
R255	NRSA63J-123X	M.G.RESISTOR	12k 1/16W
R256	NRSA63J-123X	M.G.RESISTOR	12k 1/16W
R257	NRSA63J-273X	M.G.RESISTOR	27k 1/16W
R258	NRSA63J-273X	M.G.RESISTOR	27k 1/16W
R259	NRSA63J-102X	M.G.RESISTOR	1k 1/16W
R260	NRSA63J-102X	M.G.RESISTOR	1k 1/16W
R261	NRSA63J-392X	M.G.RESISTOR	3.9k 1/16W
R262	NRSA63J-392X	M.G.RESISTOR	3.9k 1/16W
R263	NRSA63J-103X	M.G.RESISTOR	10k 1/16W
R264	NRSA63J-103X	M.G.RESISTOR	10k 1/16W
R267	NRSA63J-0R0X	M.G.RESISTOR	0 1/16W
R268	NRSA63J-0R0X	M.G.RESISTOR	0 1/16W
R269	NRSA63J-224X	M.G.RESISTOR	220k 1/16W
R270	NRSA63J-224X	M.G.RESISTOR	220k 1/16W
R271	NRSA63J-0R0X	M.G.RESISTOR	0 1/16W
R281	NRSA63J-472X	M.G.RESISTOR	4.7k 1/16W
R282	NRSA63J-101X	M.G.RESISTOR	100 1/16W
R283	NRSA63J-223X	M.G.RESISTOR	22k 1/16W
R284	NRSA63J-104X	M.G.RESISTOR	100k 1/16W

[AUDIO/LCD]

Symbol No.	Part No.	Part Name	Description	
R301	NRSA63J-473X	M.G.RESISTOR	47k	1/16W
R302	NRSA63J-473X	M.G.RESISTOR	47k	1/16W
R303	NRSA63J-822X	M.G.RESISTOR	8.2k	1/16W
R304	NRSA63J-822X	M.G.RESISTOR	8.2k	1/16W
R305	NRSA63J-103X	M.G.RESISTOR	10k	1/16W
R306	NRSA63J-103X	M.G.RESISTOR	10k	1/16W
R307	NRSA63J-103X	M.G.RESISTOR	10k	1/16W
R308	NRSA63J-103X	M.G.RESISTOR	10k	1/16W
R309	NRSA63J-473X	M.G.RESISTOR	47k	1/16W
R310	NRSA63J-473X	M.G.RESISTOR	47k	1/16W
R311	NRSA63J-103X	M.G.RESISTOR	10k	1/16W
R312	NRSA63J-103X	M.G.RESISTOR	10k	1/16W
R313	NRSA63J-822X	M.G.RESISTOR	8.2k	1/16W
R314	NRSA63J-822X	M.G.RESISTOR	8.2k	1/16W
R315	NRSA63J-103X	M.G.RESISTOR	10k	1/16W
R316	NRSA63J-103X	M.G.RESISTOR	10k	1/16W
R317	NRSA63J-102X	M.G.RESISTOR	1k	1/16W
R318	NRSA63J-102X	M.G.RESISTOR	1k	1/16W
R319	NRSA63J-473X	M.G.RESISTOR	47k	1/16W
R320	NRSA63J-473X	M.G.RESISTOR	47k	1/16W
R323	NRSA63J-222X	M.G.RESISTOR	2.2k	1/16W
R324	NRSA63J-222X	M.G.RESISTOR	2.2k	1/16W
R325	NRSA63J-103X	M.G.RESISTOR	10k	1/16W
R326	NRSA63J-273X	M.G.RESISTOR	27k	1/16W
R327	NRSA63J-102X	M.G.RESISTOR	1k	1/16W
R328	NRSA63J-102X	M.G.RESISTOR	1k	1/16W
R329	NRSA63J-102X	M.G.RESISTOR	1k	1/16W
R330	NRSA63J-103X	M.G.RESISTOR	10k	1/16W
R331	NRSA63J-103X	M.G.RESISTOR	10k	1/16W
R332	NRSA63J-473X	M.G.RESISTOR	47k	1/16W
R335	NRSA63J-0R0X	M.G.RESISTOR	0	1/16W
R336	NRSA63J-202X	M.G.RESISTOR	2k	1/16W
R337	NRSA63J-202X	M.G.RESISTOR	2k	1/16W
R339	NRSA63J-103X	M.G.RESISTOR	10k	1/16W
R340	NRSA63J-333X	M.G.RESISTOR	33k	1/16W
R341	NRSA63J-330X	M.G.RESISTOR	33	1/16W
R342	NRSA63J-473X	M.G.RESISTOR	47k	1/16W
R343	NRSA63J-270X	M.G.RESISTOR	27	1/16W
R344	NRSA63J-270X	M.G.RESISTOR	27	1/16W
R345	NRSA63J-222X	M.G.RESISTOR	2.2k	1/16W
R347	NRSA63J-103X	M.G.RESISTOR	10k	1/16W
R348	NRSA63J-822X	M.G.RESISTOR	8.2k	1/16W
R349	NRSA63J-473X	M.G.RESISTOR	47k	1/16W
R350	NRSA63J-103X	M.G.RESISTOR	10k	1/16W
R351	NRSA63J-103X	M.G.RESISTOR	10k	1/16W
R352	NRSA63J-473X	M.G.RESISTOR	47k	1/16W
R353	NRSA63J-822X	M.G.RESISTOR	8.2k	1/16W
R354	NRSA63J-103X	M.G.RESISTOR	10k	1/16W
R355	NRSA63J-473X	M.G.RESISTOR	47k	1/16W
R356	NRSA63J-473X	M.G.RESISTOR	47k	1/16W
R360	NRSA63J-333X	M.G.RESISTOR	33k	1/16W
R361	NRSA63J-473X	M.G.RESISTOR	47k	1/16W
R362	NRSA63J-473X	M.G.RESISTOR	47k	1/16W
R363	NRSA63J-183X	M.G.RESISTOR	18k	1/16W
R364	NRSA63J-333X	M.G.RESISTOR	33k	1/16W
R365	NRSA63J-183X	M.G.RESISTOR	18k	1/16W
R371	NRSA63J-222X	M.G.RESISTOR	2.2k	1/16W
R372	NRSA63J-222X	M.G.RESISTOR	2.2k	1/16W
R373	NRSA63J-0R0X	M.G.RESISTOR	0	1/16W
R374	NRSA63J-0R0X	M.G.RESISTOR	0	1/16W
R375	NRSA63J-102X	M.G.RESISTOR	1k	1/16W
R376	NRSA63J-102X	M.G.RESISTOR	1k	1/16W
R377	NRSA63J-123X	M.G.RESISTOR	12k	1/16W
R378	NRSA63J-220X	M.G.RESISTOR	22	1/16W
R379	NRSA63J-220X	M.G.RESISTOR	22	1/16W
R380	NRSA63J-473X	M.G.RESISTOR	47k	1/16W
R381	NRSA63J-0R0X	M.G.RESISTOR	0	1/16W
R383	NRSA63J-0R0X	M.G.RESISTOR	0	1/16W
R385	NRSA63J-0R0X	M.G.RESISTOR	0	1/16W
R387	NRSA63J-222X	M.G.RESISTOR	2.2k	1/16W
R388	NRSA63J-0R0X	M.G.RESISTOR	0	1/16W
R389	NRSA63J-0R0X	M.G.RESISTOR	0	1/16W
R390	NRSA63J-0R0X	M.G.RESISTOR	0	1/16W

Symbol No.	Part No.	Part Name	Description	
R391	NRSA63J-0R0X	M.G.RESISTOR	0	1/16W
R392	NRSA63J-0R0X	M.G.RESISTOR	0	1/16W
R393	NRSA63J-0R0X	M.G.RESISTOR	0	1/16W
R394	NRSA63J-0R0X	M.G.RESISTOR	0	1/16W
R395	NRSA63J-0R0X	M.G.RESISTOR	0	1/16W
R396	NRSA63J-472X	M.G.RESISTOR	4.7k	1/16W
R397	NRSA63J-0R0X	M.G.RESISTOR	0	1/16W
R399	NRSA63J-102X	M.G.RESISTOR	1k	1/16W
R601	NRSA63J-104X	M.G.RESISTOR	100k	1/16W
R602	NRSA63J-104X	M.G.RESISTOR	100k	1/16W
R603	NRSA63J-104X	M.G.RESISTOR	100k	1/16W
R604	NRSA63J-121X	M.G.RESISTOR	120	1/16W
R605	NRSA63J-121X	M.G.RESISTOR	120	1/16W
R606	NRSA63J-121X	M.G.RESISTOR	120	1/16W
R607	NRSA63J-104X	M.G.RESISTOR	100k	1/16W
R608	NRSA63J-104X	M.G.RESISTOR	100k	1/16W
R612	NRSA63J-102X	M.G.RESISTOR	1k	1/16W
R613	NRSA63J-394X	M.G.RESISTOR	390k	1/16W
R614	NRSA63J-104X	M.G.RESISTOR	100k	1/16W
R615	NRSA63J-303X	M.G.RESISTOR	30k	1/16W
R616	NRSA63J-223X	M.G.RESISTOR	22k	1/16W
R617	NRSA63J-471X	M.G.RESISTOR	470	1/16W
R618	NRSA63J-103X	M.G.RESISTOR	10k	1/16W
R619	NRSA63J-104X	M.G.RESISTOR	100k	1/16W
R620	NRSA63J-223X	M.G.RESISTOR	22k	1/16W
R621	NRSA63J-102X	M.G.RESISTOR	1k	1/16W
R622	NRSA63J-104X	M.G.RESISTOR	100k	1/16W
R623	NRSA63J-103X	M.G.RESISTOR	10k	1/16W
R625	NRSA63D-302X	M.G.RESISTOR	3k	1/16W
R626	NRSA63J-152X	M.G.RESISTOR	1.5k	1/16W
R627	NRSA63J-473X	M.G.RESISTOR	47k	1/16W
R628	NRSA63J-750X	M.G.RESISTOR	75	1/16W
R630	NRSA63J-0R0X	M.G.RESISTOR	0	1/16W
R631	NRSA63J-0R0X	M.G.RESISTOR	0	1/16W
R632	NRSA63J-103X	M.G.RESISTOR	10k	1/16W
R633	NRSA63J-103X	M.G.RESISTOR	10k	1/16W
R634	NRSA63J-333X	M.G.RESISTOR	33k	1/16W
R635	NRSA63J-823X	M.G.RESISTOR	82k	1/16W
R636	NRSA63J-104X	M.G.RESISTOR	100k	1/16W
R637	NRSA63J-102X	M.G.RESISTOR	1k	1/16W
R638	NRSA63J-224X	M.G.RESISTOR	220k	1/16W
R639	NRSA63J-224X	M.G.RESISTOR	220k	1/16W
R640	NRSA63J-224X	M.G.RESISTOR	220k	1/16W
R641	NRSA63J-101X	M.G.RESISTOR	100	1/16W
R642	NRSA63J-334X	M.G.RESISTOR	330k	1/16W
R643	NRSA63J-301X	M.G.RESISTOR	300	1/16W
R644	NRSA63J-301X	M.G.RESISTOR	300	1/16W
R645	NRSA63J-301X	M.G.RESISTOR	300	1/16W
R646	NRSA63J-301X	M.G.RESISTOR	300	1/16W
R647	NRSA63J-301X	M.G.RESISTOR	300	1/16W
R648	NRSA63J-301X	M.G.RESISTOR	300	1/16W
R649	NRSA63J-104X	M.G.RESISTOR	100k	1/16W
R650	NRSA63J-104X	M.G.RESISTOR	100k	1/16W
R651	NRSA63J-104X	M.G.RESISTOR	100k	1/16W
R652	NRSA63J-104X	M.G.RESISTOR	100k	1/16W
R653	NRSA63J-104X	M.G.RESISTOR	100k	1/16W
R654	NRSA63J-470X	M.G.RESISTOR	47	1/16W
R655	NRSA63J-470X	M.G.RESISTOR	47	1/16W
R656	NRSA63J-470X	M.G.RESISTOR	47	1/16W
R657	NRSA63J-470X	M.G.RESISTOR	47	1/16W
R658	NRSA63J-470X	M.G.RESISTOR	47	1/16W
R659	NRSA63J-104X	M.G.RESISTOR	100k	1/16W
R660	NRSA63J-104X	M.G.RESISTOR	100k	1/16W
R661	NRSA63J-104X	M.G.RESISTOR	100k	1/16W
R662	NRSA63J-104X	M.G.RESISTOR	100k	1/16W
R663	NRSA63J-104X	M.G.RESISTOR	100k	1/16W
R664	NRSA63J-104X	M.G.RESISTOR	100k	1/16W
R665	NRSA63J-104X	M.G.RESISTOR	100k	1/16W
R666	NRSA63J-104X	M.G.RESISTOR	100k	1/16W
R667	NRSA63J-104X	M.G.RESISTOR	100k	1/16W
R668	NRSA63J-104X	M.G.RESISTOR	100k	1/16W
R669	NRSA63J-104X	M.G.RESISTOR	100k	1/16W
R670	NRSA63J-333X	M.G.RESISTOR	33k	1/16W

Symbol No.	Part No.	Part Name	Description	
R671	NRSA63J-222X	M.G.RESISTOR	2.2k	1/16W
R672	NRSA63J-222X	M.G.RESISTOR	2.2k	1/16W
R673	NRSA63J-271X	M.G.RESISTOR	270	1/16W
R674	NRSA63J-271X	M.G.RESISTOR	270	1/16W
R675	NRSA63J-101X	M.G.RESISTOR	100	1/16W
R676	NRSA63J-271X	M.G.RESISTOR	270	1/16W
R677	NRSA63J-154X	M.G.RESISTOR	150k	1/16W
R678	NRSA63J-101X	M.G.RESISTOR	100	1/16W
R679	NRSA63J-333X	M.G.RESISTOR	33k	1/16W
R680	NRSA63J-101X	M.G.RESISTOR	100	1/16W
R681	NRSA63J-101X	M.G.RESISTOR	100	1/16W
R682	NRSA63J-101X	M.G.RESISTOR	100	1/16W
R683	NRSA63J-104X	M.G.RESISTOR	100k	1/16W
R684	NRSA63J-103X	M.G.RESISTOR	10k	1/16W
R685	NRSA63J-102X	M.G.RESISTOR	1k	1/16W
R686	NRSA63J-101X	M.G.RESISTOR	100	1/16W
R687	NRSA63J-101X	M.G.RESISTOR	100	1/16W
R688	NRSA63J-154X	M.G.RESISTOR	150k	1/16W
R689	NRSA63J-154X	M.G.RESISTOR	150k	1/16W
R690	NRSA63J-104X	M.G.RESISTOR	100k	1/16W
R701	NRSA63J-104X	M.G.RESISTOR	100k	1/16W
R702	NRSA63J-104X	M.G.RESISTOR	100k	1/16W
R703	NRSA63J-104X	M.G.RESISTOR	100k	1/16W
R704	NRSA63J-104X	M.G.RESISTOR	100k	1/16W
R705	NRSA63J-104X	M.G.RESISTOR	100k	1/16W
R706	NRSA63J-104X	M.G.RESISTOR	100k	1/16W
R707	NRSA63J-104X	M.G.RESISTOR	100k	1/16W
R708	NRSA63J-104X	M.G.RESISTOR	100k	1/16W
R709	NRSA63J-104X	M.G.RESISTOR	100k	1/16W
R710	NRSA63J-104X	M.G.RESISTOR	100k	1/16W
R711	NRSA63J-101X	M.G.RESISTOR	100	1/16W
R712	NRSA63J-104X	M.G.RESISTOR	100k	1/16W
R714	NRSA63J-104X	M.G.RESISTOR	100k	1/16W
R715	NRSA63J-470X	M.G.RESISTOR	47	1/16W
R716	NRSA63J-470X	M.G.RESISTOR	47	1/16W
R717	NRSA63J-470X	M.G.RESISTOR	47	1/16W
R718	NRSA63J-0R0X	M.G.RESISTOR	0	1/16W
R719	NRSA63J-104X	M.G.RESISTOR	100k	1/16W
R720	NRSA63J-104X	M.G.RESISTOR	100k	1/16W
R726	NRSA63J-0R0X	M.G.RESISTOR	0	1/16W
R727	NRSA63J-104X	M.G.RESISTOR	100k	1/16W
R728	NRSA63J-0R0X	M.G.RESISTOR	0	1/16W
R729	NRSA63J-102X	M.G.RESISTOR	1k	1/16W
R750	NRSA63J-0R0X	M.G.RESISTOR	0	1/16W
R751	NRSA63J-0R0X	M.G.RESISTOR	0	1/16W
R752	NRSA63J-104X	M.G.RESISTOR	100k	1/16W
R753	NRSA63J-104X	M.G.RESISTOR	100k	1/16W
R754	NRSA63J-0R0X	M.G.RESISTOR	0	1/16W
R755	NRSA63J-472X	M.G.RESISTOR	4.7k	1/16W
R756	NRSA63J-103X	M.G.RESISTOR	10k	1/16W
R757	NRSA63J-104X	M.G.RESISTOR	100k	1/16W
R758	NRSA63J-473X	M.G.RESISTOR	47k	1/16W
R759	NRSA63J-103X	M.G.RESISTOR	10k	1/16W
R760	NRSA63J-0R0X	M.G.RESISTOR	0	1/16W
R780	NRSA63J-102X	M.G.RESISTOR	1k	1/16W
R781	NRSA63J-102X	M.G.RESISTOR	1k	1/16W
R782	NRSA63J-102X	M.G.RESISTOR	1k	1/16W
R783	NRSA63J-102X	M.G.RESISTOR	1k	1/16W
R784	NRSA63J-822X	M.G.RESISTOR	8.2k	1/16W
R785	NRSA63J-562X	M.G.RESISTOR	5.6k	1/16W
R786	NRSA63J-822X	M.G.RESISTOR	8.2k	1/16W
R787	NRSA63J-562X	M.G.RESISTOR	5.6k	1/16W
R788	NRSA63J-822X	M.G.RESISTOR	8.2k	1/16W
R789	NRSA63J-562X	M.G.RESISTOR	5.6k	1/16W
R790	NRSA63J-822X	M.G.RESISTOR	8.2k	1/16W
R791	NRSA63J-562X	M.G.RESISTOR	5.6k	1/16W
R792	NRSA63J-0R0X	M.G.RESISTOR	0	1/16W
R793	NRSA63J-0R0X	M.G.RESISTOR	0	1/16W
R794	NRSA63J-0R0X	M.G.RESISTOR	0	1/16W
R795	NRSA63J-0R0X	M.G.RESISTOR	0	1/16W
R798	NRSA63J-103X	M.G.RESISTOR	10k	1/16W
R799	NRSA63J-103X	M.G.RESISTOR	10k	1/16W

Symbol No.	Part No.	Part Name	Description	
R800	NRSA63J-0R0X	M.G.RESISTOR	0	1/16W
R802	NRSA63J-103X	M.G.RESISTOR	10k	1/16W
R803	NRSA63J-103X	M.G.RESISTOR	10k	1/16W
R804	NRSA63J-103X	M.G.RESISTOR	10k	1/16W
R805	NRSA63J-103X	M.G.RESISTOR	10k	1/16W
R810	NRSA63J-0R0X	M.G.RESISTOR	0	1/16W
VR201	QVQ0290-A14	VAL.RESISTOR	10k	REC VR CH1
VR202	QVQ0290-A14	VAL.RESISTOR	10k	REC VR CH2
VR301	NVP1415-104X	TRIM.RESISTOR	100k	CH1 UN PB
VR302	NVP1415-104X	TRIM.RESISTOR	100k	CH1 UN REC
VR303	NVP1415-104X	TRIM.RESISTOR	100k	CH2 UN REC
VR304	NVP1415-104X	TRIM.RESISTOR	100k	CH2 UN PB
VR310	QVQ0290-A14	VAL.RESISTOR	10k	MONITOR OUT
VR311	QVQ0290-A14	VAL.RESISTOR	10k	ALARM
VR601	NVP1415-502X	TRIM.RESISTOR	5k	LCD L LEV
VR602	NVP1415-502X	TRIM.RESISTOR	5k	LCD R LEV
C201	NEH71CM-106X	E.CAPACITOR	10	16V
C202	NEH71CM-106X	E.CAPACITOR	10	16V
C205	NCB31CK-104X	CER.CAPACITOR	0.1	16V
C206	NCB31CK-104X	CER.CAPACITOR	0.1	16V
C207	NEH71CM-106X	E.CAPACITOR	10	16V
C208	NEH71CM-106X	E.CAPACITOR	10	16V
C209	NCB31CK-104X	CER.CAPACITOR	0.1	16V
C210	NCB31CK-104X	CER.CAPACITOR	0.1	16V
C211	NCB41CM-106X	CER.CAPACITOR	10	16V
C212	NCB41CM-106X	CER.CAPACITOR	10	16V
C213	NCB30JK-474X	CER.CAPACITOR	0.47	6.3V
C214	NCB30JK-474X	CER.CAPACITOR	0.47	6.3V
C215	NCB30JK-474X	CER.CAPACITOR	0.47	6.3V
C216	NCB30JK-474X	CER.CAPACITOR	0.47	6.3V
C217	NEH71CM-476X	E.CAPACITOR	47	16V
C218	NEH71CM-476X	E.CAPACITOR	47	16V
C219	NCB31CK-104X	CER.CAPACITOR	0.1	16V
C220	NCB31CK-104X	CER.CAPACITOR	0.1	16V
C223	NCB31CK-104X	CER.CAPACITOR	0.1	16V
C224	NCB31CK-104X	CER.CAPACITOR	0.1	16V
C225	NCB41CM-106X	CER.CAPACITOR	10	16V
C226	NCB41CM-106X	CER.CAPACITOR	10	16V
C227	NCB31CK-104X	CER.CAPACITOR	0.1	16V
C228	NCB31CK-104X	CER.CAPACITOR	0.1	16V
C229	NEH71CM-106X	E.CAPACITOR	10	16V
C230	NCB41CM-106X	CER.CAPACITOR	10	16V
C231	NDC31HJ-100X	CER.CAPACITOR	10p	50V
C232	NDC31HJ-101X	CER.CAPACITOR	100p	50V
C233	NCB41CM-106X	CER.CAPACITOR	10	16V
C234	NCB41CM-106X	CER.CAPACITOR	10	16V
C235	NDC31HJ-100X	CER.CAPACITOR	10p	50V
C236	NDC31HJ-100X	CER.CAPACITOR	10p	50V
C237	NEH71CM-106X	E.CAPACITOR	10	16V
C238	NCB41CM-106X	CER.CAPACITOR	10	16V
C239	NCB31CK-104X	CER.CAPACITOR	0.1	16V
C240	NCB31CK-104X	CER.CAPACITOR	0.1	16V
C241	NCB31CK-104X	CER.CAPACITOR	0.1	16V
C242	NCB31CK-104X	CER.CAPACITOR	0.1	16V
C243	NEH71CM-106X	E.CAPACITOR	10	16V
C244	NEH71CM-106X	E.CAPACITOR	10	16V
C247	NEH71CM-106X	E.CAPACITOR	10	16V
C248	NEH71CM-106X	E.CAPACITOR	10	16V
C249	NEH71CM-106X	E.CAPACITOR	10	16V
C250	NEH71CM-106X	E.CAPACITOR	10	16V
C251	NCB41CM-106X	CER.CAPACITOR	10	16V
C252	NCB41CM-106X	CER.CAPACITOR	10	16V
C253	NCB41CM-106X	CER.CAPACITOR	10	16V
C254	NCB41CM-106X	CER.CAPACITOR	10	16V
C255	NCB31CK-104X	CER.CAPACITOR	0.1	16V
C256	NCB31CK-104X	CER.CAPACITOR	0.1	16V
C257	NCB31CK-104X	CER.CAPACITOR	0.1	16V
C258	NCB31CK-104X	CER.CAPACITOR	0.1	16V
C265	NEH71CM-106X	E.CAPACITOR	10	16V
C266	NEH71CM-106X	E.CAPACITOR	10	16V
C267	NCB41CM-106X	CER.CAPACITOR	10	16V

[AUDIO/LCD]

Symbol No.	Part No.	Part Name	Description	
C268	NCB41CM-106X	CER.CAPACITOR	10	16V
C269	NCB41CM-106X	CER.CAPACITOR	10	16V
C270	NCB41CM-106X	CER.CAPACITOR	10	16V
C271	NEH71CM-106X	E.CAPACITOR	10	16V
C272	NEH71CM-106X	E.CAPACITOR	10	16V
C280	NCB31CK-104X	CER.CAPACITOR	0.1	16V
C281	NCB31CK-104X	CER.CAPACITOR	0.1	16V
C282	NCB31CK-104X	CER.CAPACITOR	0.1	16V
C283	NCB31CK-104X	CER.CAPACITOR	0.1	16V
C284	NCB31CK-104X	CER.CAPACITOR	0.1	16V
C291	NCB41CM-106X	CER.CAPACITOR	10	16V
C292	NCB41CM-106X	CER.CAPACITOR	10	16V
C303	NCB41CM-106X	CER.CAPACITOR	10	16V
C304	NCB41CM-106X	CER.CAPACITOR	10	16V
C309	NCB41CM-106X	CER.CAPACITOR	10	16V
C310	NCB41CM-106X	CER.CAPACITOR	10	16V
C313	NDC31HJ-100X	CER.CAPACITOR	10p	50V
C314	NDC31HJ-100X	CER.CAPACITOR	10p	50V
C315	NDC31HJ-100X	CER.CAPACITOR	10p	50V
C316	NDC31HJ-100X	CER.CAPACITOR	10p	50V
C317	NCB31CK-104X	CER.CAPACITOR	0.1	16V
C318	NEH61CM-226X	E.CAPACITOR	22	16V
C319	NEH61CM-226X	E.CAPACITOR	22	16V
C320	NCB31CK-104X	CER.CAPACITOR	0.1	16V
C321	NEH61CM-226X	E.CAPACITOR	22	16V
C322	NEH61CM-226X	E.CAPACITOR	22	16V
C323	NCB31CK-104X	CER.CAPACITOR	0.1	16V
C324	NCB31CK-104X	CER.CAPACITOR	0.1	16V
C325	NCB41CM-106X	CER.CAPACITOR	10	16V
C326	NCB41CM-106X	CER.CAPACITOR	10	16V
C330	NCB31CK-104X	CER.CAPACITOR	0.1	16V
C331	NEH61CM-226X	E.CAPACITOR	22	16V
C332	NEH61CM-226X	E.CAPACITOR	22	16V
C333	NCB31CK-104X	CER.CAPACITOR	0.1	16V
C334	NCB31CK-104X	CER.CAPACITOR	0.1	16V
C335	NEH61CM-226X	E.CAPACITOR	22	16V
C336	NCB31CK-104X	CER.CAPACITOR	0.1	16V
C337	NEH61CM-226X	E.CAPACITOR	22	16V
C341	NCB41CM-106X	CER.CAPACITOR	10	16V
C342	NCB41CM-106X	CER.CAPACITOR	10	16V
C343	NCB41CM-106X	CER.CAPACITOR	10	16V
C346	NDC31HJ-101X	CER.CAPACITOR	100p	50V
C347	NCB31CK-104X	CER.CAPACITOR	0.1	16V
C349	NEH71CM-106X	E.CAPACITOR	10	16V
C353	NEH71CM-476X	E.CAPACITOR	47	16V
C354	NCB41CM-106X	CER.CAPACITOR	10	16V
C355	NCB41CM-106X	CER.CAPACITOR	10	16V
C356	NCB41CM-106X	CER.CAPACITOR	10	16V
C357	NEH71EM-226X	E.CAPACITOR	22	25V
C361	NCB41CM-106X	CER.CAPACITOR	10	16V
C362	NCB41CM-106X	CER.CAPACITOR	10	16V
C363	NDC31HJ-100X	CER.CAPACITOR	10p	50V
C364	NDC31HJ-100X	CER.CAPACITOR	10p	50V
C366	NEH71CM-106X	E.CAPACITOR	10	16V
C368	NEH71CM-106X	E.CAPACITOR	10	16V
C370	NEH71CM-106X	E.CAPACITOR	10	16V
C372	NEH71CM-106X	E.CAPACITOR	10	16V
C373	NCB41CM-106X	CER.CAPACITOR	10	16V
C374	NCB41CM-106X	CER.CAPACITOR	10	16V
C381	NCB31CK-104X	CER.CAPACITOR	0.1	16V
C382	NEH71CM-476X	E.CAPACITOR	47	16V
C383	NCB31CK-104X	CER.CAPACITOR	0.1	16V
C384	NEH71CM-476X	E.CAPACITOR	47	16V
C385	NCB31CK-104X	CER.CAPACITOR	0.1	16V
C386	NEH71CM-476X	E.CAPACITOR	47	16V
C387	NCB31CK-104X	CER.CAPACITOR	0.1	16V
C388	NCB31CK-104X	CER.CAPACITOR	0.1	16V
C389	NCB31CK-104X	CER.CAPACITOR	0.1	16V
C391	NCB31EK-473X	CER.CAPACITOR	0.047	25V
C392	NEH71EM-226X	E.CAPACITOR	22	25V
C393	NCB31EK-473X	CER.CAPACITOR	0.047	25V
C394	NCB31CK-104X	CER.CAPACITOR	0.1	16V
C395	NCB31CK-104X	CER.CAPACITOR	0.1	16V

Symbol No.	Part No.	Part Name	Description	
C396	NCB31CK-104X	CER.CAPACITOR	0.1	16V
C401	NBE21AM-106X	TAN.CAPACITOR	10	10V
C402	NCB31CK-473X	CER.CAPACITOR	0.047	16V
C403	NCB31CK-104X	CER.CAPACITOR	0.1	16V
C404	NCB31CK-104X	CER.CAPACITOR	0.1	16V
C405	NCB31CK-104X	CER.CAPACITOR	0.1	16V
C406	NCB31CK-104X	CER.CAPACITOR	0.1	16V
C407	NBE21AM-106X	TAN.CAPACITOR	10	10V
C408	NCB31CK-473X	CER.CAPACITOR	0.047	16V
C409	NEH71CM-106X	E.CAPACITOR	10	16V
C601	NCB31CK-104X	CER.CAPACITOR	0.1	16V
C602	NCB31CK-104X	CER.CAPACITOR	0.1	16V
C603	NCB31CK-104X	CER.CAPACITOR	0.1	16V
C604	NCB31CK-104X	CER.CAPACITOR	0.1	16V
C605	NCB31HK-331X	CER.CAPACITOR	330p	50V
C606	NCB31CK-104X	CER.CAPACITOR	0.1	16V
C607	NCB31CK-104X	CER.CAPACITOR	0.1	16V
C608	NCB31HK-103X	CER.CAPACITOR	0.01	50V
C609	NCB31CK-104X	CER.CAPACITOR	0.1	16V
C610	NCB11AK-225X	CER.CAPACITOR	2.2	10V
C611	NCB31CK-104X	CER.CAPACITOR	0.1	16V
C612	NCB31CK-104X	CER.CAPACITOR	0.1	16V
C613	NCB31CK-104X	CER.CAPACITOR	0.1	16V
C614	NCB31HK-122X	CER.CAPACITOR	1200p	50V
C615	NEH71CM-476X	E.CAPACITOR	47	16V
C616	NCB31CK-104X	CER.CAPACITOR	0.1	16V
C617	NBE51AM-476X	TAN.CAPACITOR	47	10V
C618	NCB31CK-104X	CER.CAPACITOR	0.1	16V
C619	NCB31CK-104X	CER.CAPACITOR	0.1	16V
C620	NCB41EM-475X	CER.CAPACITOR	4.7	25V
C621	NCB31CK-104X	CER.CAPACITOR	0.1	16V
C622	NCB41CM-106X	CER.CAPACITOR	10	16V
C623	NCB41CM-106X	CER.CAPACITOR	10	16V
C624	NCB11EK-105X	CER.CAPACITOR	1	25V
C625	NCB41EM-475X	CER.CAPACITOR	4.7	25V
C628	NCB41CM-106X	CER.CAPACITOR	10	16V
C629	NCB41CM-106X	CER.CAPACITOR	10	16V
C630	NCB41CM-106X	CER.CAPACITOR	10	16V
C631	NCB41EM-475X	CER.CAPACITOR	4.7	25V
C633	NCB41EM-475X	CER.CAPACITOR	4.7	25V
C634	NCB41EM-475X	CER.CAPACITOR	4.7	25V
C635	NDC31HJ-180X	CER.CAPACITOR	18p	50V
C636	NDC31HJ-150X	CER.CAPACITOR	15p	50V
C637	NDC31HJ-150X	CER.CAPACITOR	15p	50V
C638	NDC31HJ-150X	CER.CAPACITOR	15p	50V
C639	NCB31CK-104X	CER.CAPACITOR	0.1	16V
C640	NCB31CK-104X	CER.CAPACITOR	0.1	16V
C641	NCB31CK-104X	CER.CAPACITOR	0.1	16V
C642	NCB31CK-104X	CER.CAPACITOR	0.1	16V
C643	NCB31CK-104X	CER.CAPACITOR	0.1	16V
C645	NCB31CK-104X	CER.CAPACITOR	0.1	16V
C651	NCB41EM-475X	CER.CAPACITOR	4.7	25V
C652	NCB41EM-475X	CER.CAPACITOR	4.7	25V
C653	NCB41CM-106X	CER.CAPACITOR	10	16V
C654	NCB31CK-104X	CER.CAPACITOR	0.1	16V
C655	NCB31CK-104X	CER.CAPACITOR	0.1	16V
C656	NCB41CM-106X	CER.CAPACITOR	10	16V
C657	NCB41EM-475X	CER.CAPACITOR	4.7	25V
C670	NCB41CM-106X	CER.CAPACITOR	10	16V
C671	NCB41CM-106X	CER.CAPACITOR	10	16V
C690	NCB31CK-104X	CER.CAPACITOR	0.1	16V
L381	NQL024J-100X	COIL	10uH	
L382	NQL024J-100X	COIL	10uH	
L383	NQL024J-100X	COIL	10uH	
L384	NQL114K-101X	COIL	100uH	
L601	NQL024J-100X	COIL	10uH	
L602	NQL024J-100X	COIL	10uH	
L603	NQL024J-100X	COIL	10uH	
L604	NQL024J-100X	COIL	10uH	
L605	NQL024J-100X	COIL	10uH	

6.26 REG BOARD ASSEMBLY PARTS LIST 3 3

CK263300A5 3 3

Symbol No.	Part No.	Part Name	Description
X601	NAX0065-001X	CRYSTAL	4.912MHz
X602	NAX0074-001X	CRYSTAL	32.768kHz
S201	NSW0070-001X	SLIDE SWITCH	INPUT SEL CH1
S202	NSW0070-001X	SLIDE SWITCH	INPUT SEL CH2
S203	NSW0070-001X	SLIDE SWITCH	MANU/AUTO CH1
S204	NSW0070-001X	SLIDE SWITCH	MANU/AUTO CH2
S301	QSW0340-001	SLIDE SWITCH	MONITOR OUT SEL
S603	QSW0334-001	SLIDE SWITCH	LIGHT
S604	NSW0005-001X	TACT SWITCH	CONTINUE
S605	NSW0005-001X	TACT SWITCH	MENU
S606	NSW0005-001X	TACT SWITCH	HOLD
S607	NSW0005-001X	TACT SWITCH	SHIFT
S608	NSW0005-001X	TACT SWITCH	ADVANCE
S609	NSW0005-001X	TACT SWITCH	PRESET
S610	NSW0005-001X	TACT SWITCH	COUNTER RESET
S611	QSW0340-001	SLIDE SWITCH	CTL/TC/UB
S612	NSW0125-001X	SWITCH	CPU RESET
S620	NSW0070-001X	SLIDE SWITCH	VTR INPUT
S621	NSW0070-002X	SLIDE SWITCH	VTR SELECT
S622	NSW0070-002X	SLIDE SWITCH	TC GENE.
CN201	QGF0508F1-40X	CONNECTOR	40PIN
CN203	QGA1201F2-02X	CONNECTOR	2PIN
CN601	QGF0508F1-30X	CONNECTOR	30PIN
CN602	QGF1012F1-08X	CONNECTOR	8PIN
CN604	QGF0508F1-20X	CONNECTOR	20PIN
CN605	QGA1201F2-07X	CONNECTOR	7PIN
TP1	NNZ0009-001X	TEST POINT	TP1-611
BT601	CR2032-HLD	BATTERY HOLDER	
⚠CP601	ICP-S1.0TN	ICP	
DI601	QLL0063-001	BACK LIGHT ASSY	
K601	PGZ00627Z	FERRATE BEADS	K601-607
TB601	PGZ02228	EARTH LUG	TB601,602

Symbol No.	Part No.	Part Name	Description	
IC1	MB3782PF-X	I.C.(M)	FUJITSU	
IC2	MB3782PF-X	I.C.(M)	FUJITSU	
Q1	2SJ484WY-X	FET	HITACHI	
Q2	2SC4097/QR/-X	TRANSISTOR	ROHM	
Q3	2SA1577/QR/-X	TRANSISTOR	ROHM	
Q4	2SJ484WY-X	FET	HITACHI	
Q5	2SC4097/QR/-X	TRANSISTOR	ROHM	
Q6	2SA1577/QR/-X	TRANSISTOR	ROHM	
Q7	2SJ484WY-X	FET	HITACHI	
Q8	2SC4097/QR/-X	TRANSISTOR	ROHM	
Q9	2SA1577/QR/-X	TRANSISTOR	ROHM	
Q10	2SJ484WY-X	FET	HITACHI	
Q11	2SC4097/QR/-X	TRANSISTOR	ROHM	
Q12	2SA1577/QR/-X	TRANSISTOR	ROHM	
Q13	2SA1577/QR/-X	TRANSISTOR	ROHM	
Q14	2SC4097/QR/-X	TRANSISTOR	ROHM	
Q15	HAT1021R-X	TRANSISTOR	HITACHI	
Q16	2SC4097/QR/-X	TRANSISTOR	ROHM	
Q17	2SA1577/QR/-X	TRANSISTOR	ROHM	
Q18	2SA1312/G/-X	TRANSISTOR	TOSHIBA	
Q19	DTC144EUA-X	TRANSISTOR	ROHM	
D1	MA736-X	DIODE	MATSUSHITA	
D2	MA736-X	DIODE	MATSUSHITA	
D3	MA736-X	DIODE	MATSUSHITA	
D4	MA736-X	DIODE	MATSUSHITA	
D5	DA114-X	DIODE	ROHM	
D6	DA114-X	DIODE	ROHM	
D9	MA738-X	DIODE	MATSUSHITA	
R1	NRSA63D-332X	M.G.RESISTOR	3.3k	1/16W
R2	NRSA63D-471X	M.G.RESISTOR	470	1/16W
R3	NRSA63D-100X	M.G.RESISTOR	10	1/16W
R4	NRSA63D-332X	M.G.RESISTOR	3.3k	1/16W
R5	NRSA63D-471X	M.G.RESISTOR	470	1/16W
R6	NRSA63D-100X	M.G.RESISTOR	10	1/16W
R7	NRSA63D-332X	M.G.RESISTOR	3.3k	1/16W
R8	NRSA63D-471X	M.G.RESISTOR	470	1/16W
R9	NRSA63D-100X	M.G.RESISTOR	10	1/16W
R10	NRSA63D-332X	M.G.RESISTOR	3.3k	1/16W
R11	NRSA63D-471X	M.G.RESISTOR	470	1/16W
R12	NRSA63D-100X	M.G.RESISTOR	10	1/16W
R13	NRSA63D-332X	M.G.RESISTOR	3.3k	1/16W
R14	NRSA63D-332X	M.G.RESISTOR	3.3k	1/16W
R15	NRSA63D-681X	M.G.RESISTOR	680	1/16W
R16	NRSA63D-473X	M.G.RESISTOR	47k	1/16W
R17	NRSA63D-332X	M.G.RESISTOR	3.3k	1/16W
R18	NRSA63D-471X	M.G.RESISTOR	470	1/16W
R19	NRSA63D-100X	M.G.RESISTOR	10	1/16W
R20	NRSA63D-153X	M.G.RESISTOR	15k	1/16W
R21	NRSA63D-154X	M.G.RESISTOR	150k	1/16W
R22	NRSA63D-222X	M.G.RESISTOR	2.2k	1/16W
R23	NRSA63J-0R0X	M.G.RESISTOR	0	1/16W
R24	NRSA63D-683X	M.G.RESISTOR	68k	1/16W
R25	NRSA63D-274X	M.G.RESISTOR	270k	1/16W
R26	NRSA63D-472X	M.G.RESISTOR	4.7k	1/16W
R27	NRSA63D-154X	M.G.RESISTOR	150k	1/16W
R28	NRSA63D-472X	M.G.RESISTOR	4.7k	1/16W
R29	NRSA63D-154X	M.G.RESISTOR	150k	1/16W
R30	NRSA63D-683X	M.G.RESISTOR	68k	1/16W
R31	NRSA63D-274X	M.G.RESISTOR	270k	1/16W
R32	NRSA63D-105X	M.G.RESISTOR	1M	1/16W
R33	NRSA63D-822X	M.G.RESISTOR	8.2k	1/16W
R34	NRSA63D-222X	M.G.RESISTOR	2.2k	1/16W
R35	NRSA63D-472X	M.G.RESISTOR	4.7k	1/16W
R36	NRSA63D-822X	M.G.RESISTOR	8.2k	1/16W
R37	NRSA63D-154X	M.G.RESISTOR	150k	1/16W
R38	NRSA63D-472X	M.G.RESISTOR	4.7k	1/16W
R39	NRSA63D-472X	M.G.RESISTOR	4.7k	1/16W
R40	NRSA63D-683X	M.G.RESISTOR	68k	1/16W
R41	NRSA63D-274X	M.G.RESISTOR	270k	1/16W

[REG]

Symbol No.	Part No.	Part Name	Description
R42	NRSA63D-472X	M.G.RESISTOR	4.7k 1/16W
R43	NRSA63D-273X	M.G.RESISTOR	27k 1/16W
R44	NRSA63D-222X	M.G.RESISTOR	2.2k 1/16W
R46	NRSA63D-222X	M.G.RESISTOR	2.2k 1/16W
R47	NRSA63D-224X	M.G.RESISTOR	220k 1/16W
R48	NRSA63D-682X	M.G.RESISTOR	6.8k 1/16W
R49	NRSA63D-102X	M.G.RESISTOR	1k 1/16W
R50	NRSA63D-103X	M.G.RESISTOR	10k 1/16W
R51	NRSA63D-222X	M.G.RESISTOR	2.2k 1/16W
R52	NRSA63D-472X	M.G.RESISTOR	4.7k 1/16W
R53	NRSA63D-154X	M.G.RESISTOR	150k 1/16W
R54	NRSA63D-683X	M.G.RESISTOR	68k 1/16W
R55	NRSA63D-274X	M.G.RESISTOR	270k 1/16W
R56	NRSA63D-683X	M.G.RESISTOR	68k 1/16W
R57	NRSA63D-274X	M.G.RESISTOR	270k 1/16W
R58	NRSA63D-472X	M.G.RESISTOR	4.7k 1/16W
R59	NRSA63D-154X	M.G.RESISTOR	150k 1/16W
R60	NRSA63D-103X	M.G.RESISTOR	10k 1/16W
R61	NRSA63D-103X	M.G.RESISTOR	10k 1/16W
R62	NRSA63D-154X	M.G.RESISTOR	150k 1/16W
R63	NRSA63D-472X	M.G.RESISTOR	4.7k 1/16W
R64	NRSA63D-683X	M.G.RESISTOR	68k 1/16W
R65	NRSA63D-154X	M.G.RESISTOR	150k 1/16W
R66	NRSA63D-222X	M.G.RESISTOR	2.2k 1/16W
R67	NRSA63D-823X	M.G.RESISTOR	82k 1/16W
R68	NRSA63D-392X	M.G.RESISTOR	3.9k 1/16W
R69	NRSA63D-472X	M.G.RESISTOR	4.7k 1/16W
R70	NRSA63D-103X	M.G.RESISTOR	10k 1/16W
R71	NRSA63D-823X	M.G.RESISTOR	82k 1/16W
R72	NRSA63D-681X	M.G.RESISTOR	680 1/16W
R101	NRSA63D-274X	M.G.RESISTOR	270k 1/16W
R102	NRSA63D-273X	M.G.RESISTOR	27k 1/16W
C1	NBQD1AM-686X	TAN.CAPACITOR	68 10V
C2	NCB31CK-104X	CER.CAPACITOR	0.1 16V
C3	NBQD1AM-686X	TAN.CAPACITOR	68 10V
C4	NBQD1AM-686X	TAN.CAPACITOR	68 10V
C5	NCB31CK-104X	CER.CAPACITOR	0.1 16V
C6	NBQD1AM-686X	TAN.CAPACITOR	68 10V
C7	NBQD1AM-686X	TAN.CAPACITOR	68 10V
C8	NCB31CK-104X	CER.CAPACITOR	0.1 16V
C9	NBQD1AM-686X	TAN.CAPACITOR	68 10V
C10	NBQD1AM-686X	TAN.CAPACITOR	68 10V
C11	NCB31CK-104X	CER.CAPACITOR	0.1 16V
C12	NBQD1AM-686X	TAN.CAPACITOR	68 10V
C13	NCB31CK-104X	CER.CAPACITOR	0.1 16V
C14	NBQD1AM-686X	TAN.CAPACITOR	68 10V
C15	NEHE1JM-106X	E.CAPACITOR	10 63V
C16	NCF21HZ-104X	CER.CAPACITOR	0.1 50V
C17	NCF21HZ-104X	CER.CAPACITOR	0.1 50V
C18	NCF21HZ-104X	CER.CAPACITOR	0.1 50V
C19	NCF21HZ-104X	CER.CAPACITOR	0.1 50V
C20	NCS31HJ-471X	CER.CAPACITOR	470p 50V
C21	NCS31HJ-471X	CER.CAPACITOR	470p 50V
C22	NBQD1AM-686X	TAN.CAPACITOR	68 10V
C23	NCB31CK-104X	CER.CAPACITOR	0.1 16V
C24	NBQD1AM-686X	TAN.CAPACITOR	68 10V
C25	NEH91EM-336X	E.CAPACITOR	33 25V
C26	NEH91EM-336X	E.CAPACITOR	33 25V
C27	NCB31EK-473X	CER.CAPACITOR	0.047 25V
C28	NCB31CK-104X	CER.CAPACITOR	0.1 16V
C29	NCB31EK-822X	CER.CAPACITOR	8200p 25V
C30	NCB31EK-822X	CER.CAPACITOR	8200p 25V
C31	NCB31CK-104X	CER.CAPACITOR	0.1 16V
C32	NCS31HJ-391X	CER.CAPACITOR	390p 50V
C33	NCB31EK-822X	CER.CAPACITOR	8200p 25V
C34	NCB31CK-104X	CER.CAPACITOR	0.1 16V
C35	NCB11CK-105X	CER.CAPACITOR	1 16V
C36	NCB31CK-104X	CER.CAPACITOR	0.1 16V
C37	NCB31EK-822X	CER.CAPACITOR	8200p 25V
C38	NCB31EK-822X	CER.CAPACITOR	8200p 25V
C39	NCB31CK-104X	CER.CAPACITOR	0.1 16V
C40	NCB31EK-473X	CER.CAPACITOR	0.047 25V

Symbol No.	Part No.	Part Name	Description
C41	NCB31CK-104X	CER.CAPACITOR	0.1 16V
C42	NCB31EK-822X	CER.CAPACITOR	8200p 25V
C43	NCB31CK-104X	CER.CAPACITOR	0.1 16V
C44	NCB41EM-475X	CER.CAPACITOR	4.7 25V
C45	NCB41EM-475X	CER.CAPACITOR	4.7 25V
C46	NCB41EM-475X	CER.CAPACITOR	4.7 25V
C47	NCB41EM-475X	CER.CAPACITOR	4.7 25V
C48	NCB31CK-104X	CER.CAPACITOR	0.1 16V
C61	NEHE1JM-106X	E.CAPACITOR	10 63V
C101	NCB31CK-104X	CER.CAPACITOR	0.1 16V
L1	SSV2810-330V	COIL	33uH
L2	SSV2810-330V	COIL	33uH
L3	SSV2810-330V	COIL	33uH
L4	SSV2810-330V	COIL	33uH
L5	SSV2810-330V	COIL	33uH
L6	SSV2810-330V	COIL	33uH
L7	SSV2810-330V	COIL	33uH
L8	SSV2810-330V	COIL	33uH
L9	SSV2810-330V	COIL	33uH
L10	NQL42EM-220X	COIL	22uH
L11	NQL26CM-220X	COIL	22uH
L20	SSV2810-330V	COIL	33uH
L21	NQL26CM-330X	COIL	33uH
CN1	QGA1201F2-06X	CONNECTOR	6PIN
CN2	QGA1201C2-12X	CONNECTOR	12PIN
CN3	QGA1201C2-04X	CONNECTOR	4PIN
⚠CP1	ICP-S0.5TN	ICP	
⚠CP2	ICP-S2.3TN	ICP	
⚠CP3	ICP-S2.3TN	ICP	
T1	NQR0183-001X	TRANSFORMER	
TB1	PGZ02228	EARTH LUG	TB1,2

6.27 MT BOARD ASSEMBLY PARTS LIST [3][4]

CK263600A2 [3][4]

Symbol No.	Part No.	Part Name	Description	
IC1	TC7SH08FU-X	I.C.(M)	TOSHIBA	
IC2	TC7SH32FU-X	I.C.(M)	TOSHIBA	
IC3	TC7SH04FU-X	I.C.(M)	TOSHIBA	
IC4	AN77L05M-X	I.C.(M)	MATSUSHITA	
IC5	NJM78L05UA-X	I.C.(M)	JRC	
IC6	TC7SH08FU-X	I.C.(M)	TOSHIBA	
Q9	2SC4626/BC/-X	TRANSISTOR	MATSUSHITA	
Q10	2SC4626/BC/-X	TRANSISTOR	MATSUSHITA	
R27	NRSA63J-0R0X	M.G.RESISTOR	0	1/16W
R28	NRSA63D-822X	M.G.RESISTOR	8.2k	1/16W
R29	NRSA63D-104X	M.G.RESISTOR	100k	1/16W
R30	NRSA63D-563X	M.G.RESISTOR	56k	1/16W
R31	NRSA63D-102X	M.G.RESISTOR	1k	1/16W
R32	NRSA63D-103X	M.G.RESISTOR	10k	1/16W
R33	NRSA63J-0R0X	M.G.RESISTOR	0	1/16W
R35	NRSA63D-223X	M.G.RESISTOR	22k	1/16W
C1	NCB11EK-105X	CER.CAPACITOR	1	25V
C2	NCB11EK-105X	CER.CAPACITOR	1	25V
C3	NCB11EK-105X	CER.CAPACITOR	1	25V
C4	NCB11EK-105X	CER.CAPACITOR	1	25V
C5	NCB31EK-223X	CER.CAPACITOR	0.022	25V
C6	NCB31EK-223X	CER.CAPACITOR	0.022	25V
CN3	QGA1201F2-15X	CONNECTOR	15PIN	
CN4	QGA1201F2-03X	CONNECTOR	3PIN	
CN21	QGF0508F1-30X	CONNECTOR	30PIN	
CN23	QGF0508F1-30X	CONNECTOR	30PIN	
CN32	QGA1201F2-06X	CONNECTOR	6PIN	
CN61	QGF0508F1-40X	CONNECTOR	40PIN	
CN62	QGF0508F1-30X	CONNECTOR	30PIN	
CN101	QGF0508F1-50X	CONNECTOR	50PIN	
CN102	QGF1012F1-06X	CONNECTOR	6PIN	
CN103	QGF1012F1-16X	CONNECTOR	16PIN	
CN104	QGF0508F1-20X	CONNECTOR	20PIN	
CN106	QGA1201F2-12X	CONNECTOR	12PIN	
CN115	QGA1201F2-05X	CONNECTOR	5PIN	
CN201	QGF0508F1-40X	CONNECTOR	40PIN	
CN251	QGF0508F1-50X	CONNECTOR	50PIN	
CN252	QGF0508F1-40X	CONNECTOR	40PIN	
CN253	QGA1201F2-02X	CONNECTOR	2PIN	
CN261	QGF0508F1-50X	CONNECTOR	50PIN	
CN262	QGF0508F1-50X	CONNECTOR	50PIN	
CN401	QGF0508F1-40X	CONNECTOR	40PIN	
CN601	QGF0508F1-30X	CONNECTOR	30PIN	

6.28 OPE BOARD ASSEMBLY PARTS LIST [3][5]

CK263400A3 [3][5]

Symbol No.	Part No.	Part Name	Description	
IC1	M66312FP-W	I.C.(M)	MITSUBISHI	
IC2	TC7S14FU-X	I.C.(M)	TOSHIBA	
IC3	TC7S14FU-X	I.C.(M)	TOSHIBA	
D1	DAN202U-X	DIODE	ROHM	
LD1	SLM-13VWF-X	L.E.D.	LOG	
LD2	SLM-13VWF-X	L.E.D.	REW	
LD3	SLM-13VWF-X	L.E.D.	FF	
LD4	SLM-13VWF-X	L.E.D.	PLAY	
LD5	SLM-13VWF-X	L.E.D.	STILL	
R1	NRSA63J-472X	M.G.RESISTOR	4.7k	1/16W
R2	NRSA63J-472X	M.G.RESISTOR	4.7k	1/16W
R3	NRSA63J-472X	M.G.RESISTOR	4.7k	1/16W
R4	NRSA63J-472X	M.G.RESISTOR	4.7k	1/16W
R5	NRSA63J-224X	M.G.RESISTOR	220k	1/16W
R6	NRSA63J-102X	M.G.RESISTOR	1k	1/16W
R7	NRSA63J-102X	M.G.RESISTOR	1k	1/16W
R8	NRSA63J-122X	M.G.RESISTOR	1.2k	1/16W
R9	NRSA63J-222X	M.G.RESISTOR	2.2k	1/16W
R10	NRSA63J-332X	M.G.RESISTOR	3.3k	1/16W
R11	NRSA63J-561X	M.G.RESISTOR	560	1/16W
R12	NRSA63J-561X	M.G.RESISTOR	560	1/16W
R14	NRSA63J-561X	M.G.RESISTOR	560	1/16W
R15	NRSA63J-561X	M.G.RESISTOR	560	1/16W
R16	NRSA63J-561X	M.G.RESISTOR	560	1/16W
R17	NRSA63J-472X	M.G.RESISTOR	4.7k	1/16W
R18	NRSA63J-472X	M.G.RESISTOR	4.7k	1/16W
C1	NBE21CM-475X	TAN.CAPACITOR	4.7	16V
C2	NCB31CK-104X	CER.CAPACITOR	0.1	16V
C3	NCB11CK-105X	CER.CAPACITOR	1	16V
C4	NCB31CK-104X	CER.CAPACITOR	0.1	16V
C5	NCB31CK-104X	CER.CAPACITOR	0.1	16V
L1	NQL114K-100X	COIL	10uH	
S1	NSW0005-001X	TACT SWITCH	REW	
S2	NSW0005-001X	TACT SWITCH	STOP	
S3	NSW0005-001X	TACT SWITCH	FF	
S4	NSW0005-001X	TACT SWITCH	PLAY	
S5	NSW0005-001X	TACT SWITCH	STILL	
S10	NSW0005-001X	TACT SWITCH	LOG	
CN1	QGF1013F1-08X	CONNECTOR	8PIN	

6.29 SEN1 BOARD ASSEMBLY PARTS LIST [3][6]

CK263400A4 [3][6]□□□□□□

Symbol No.	Part No.	Part Name	Description	
PC1	TLP909	I.C(PH COUPLER)		
PC2	TLP830	I.C(PH COUPLER)		
R1	NRSA63J-102X	M.G.RESISTOR	1k	1/16W
R2	NRSA63J-223X	M.G.RESISTOR	22k	1/16W
R3	NRSA63J-561X	M.G.RESISTOR	560	1/16W
R4	NRSA63J-223X	M.G.RESISTOR	22k	1/16W
C1	NCB31HK-103X	CER.CAPACITOR	0.01	50V
CN115	QGA1201F2-05X	CONNECTOR	5PIN	
CN116	QGA1201F2-03X	CONNECTOR	2PIN	

6.30 SENS2 BOARD ASSEMBLY PARTS LIST [3][7]

CK263400A5 [3][7]□□□□□□

Symbol No.	Part No.	Part Name	Description	
PC1	TLP814	I.C(PH COUPLER)		
R1	NRSA63J-223X	M.G.RESISTOR	22k	1/16W
R2	NRSA63J-821X	M.G.RESISTOR	820	1/16W
C1	NCB31HK-103X	CER.CAPACITOR	0.01	50V
CN116	QGA1201F2-03X	CONNECTOR	3PIN	

6.31 REMOTE BOARD ASSEMBLY PARTS LIST [3][8]

CK263400A6 [3][8]□□□□□□

Symbol No.	Part No.	Part Name	Description
D1	HZM6C-X	ZENER DIODE	HITACHI
D2	HZM6C-X	ZENER DIODE	HITACHI
D3	HZM6C-X	ZENER DIODE	HITACHI
CN102	SCV2477-006	CONNECTOR	6PIN
K1	NQR0351-001X	FERRITE BEADS	K1-5

6.32 AU JUNK BOARD ASSEMBLY PARTS LIST [3][9]

CK263300A3 [3][9]□□□□□□

Symbol No.	Part No.	Part Name	Description	
IC1	NJM2068M-D-X	I.C.(M)	JRC	
IC2	NJM2068M-D-X	I.C.(M)	JRC	
IC101	NJM2068M-D-X	I.C.(M)	JRC	
IC102	NJM2068M-D-X	I.C.(M)	JRC	
Q51	2SD2240/RST/-X	TRANSISTOR	MATSUSHITA	
Q52	2SB1463/RST/-X	TRANSISTOR	MATSUSHITA	
Q53	2SD2240/RST/-X	TRANSISTOR	MATSUSHITA	
Q151	2SD2240/RST/-X	TRANSISTOR	MATSUSHITA	
Q152	2SB1463/RST/-X	TRANSISTOR	MATSUSHITA	
Q153	2SD2240/RST/-X	TRANSISTOR	MATSUSHITA	
D1	DA204U-X	DIODE	ROHM	
D2	DA204U-X	DIODE	ROHM	
D101	DA204U-X	DIODE	ROHM	
D102	DA204U-X	DIODE	ROHM	
R1	NRSA63D-102X	M.G.RESISTOR	1k	1/16W
R2	NRSA63D-102X	M.G.RESISTOR	1k	1/16W
R3	NRSA63D-102X	M.G.RESISTOR	1k	1/16W
R4	NRSA63D-102X	M.G.RESISTOR	1k	1/16W
R5	NRSA63D-102X	M.G.RESISTOR	1k	1/16W
R6	NRSA63D-102X	M.G.RESISTOR	1k	1/16W
R11	NRSA63D-331X	M.G.RESISTOR	330	1/16W
R12	NRSA63D-331X	M.G.RESISTOR	330	1/16W
R13	NRSA63J-332X	M.G.RESISTOR	3.3k	1/16W
R14	NRSA63J-104X	M.G.RESISTOR	100k	1/16W
R15	NRSA63J-104X	M.G.RESISTOR	100k	1/16W
R16	NRSA63J-222X	M.G.RESISTOR	2.2k	1/16W
R17	NRSA63J-222X	M.G.RESISTOR	2.2k	1/16W
R18	NRSA63J-750X	M.G.RESISTOR	75	1/16W
R19	NRSA63J-680X	M.G.RESISTOR	68	1/16W
R20	NRSA63J-101X	M.G.RESISTOR	100	1/16W
R21	NRSA63J-101X	M.G.RESISTOR	100	1/16W
R22	NRSA63J-332X	M.G.RESISTOR	3.3k	1/16W
R23	NRSA63J-332X	M.G.RESISTOR	3.3k	1/16W
R24	NRSA63D-153X	M.G.RESISTOR	15k	1/16W
R25	NRSA63D-153X	M.G.RESISTOR	15k	1/16W
R26	NRSA63D-153X	M.G.RESISTOR	15k	1/16W
R27	NRSA63D-153X	M.G.RESISTOR	15k	1/16W
R51	NRSA63J-273X	M.G.RESISTOR	27k	1/16W
R52	NRSA63J-274X	M.G.RESISTOR	270k	1/16W
R53	NRSA63J-274X	M.G.RESISTOR	270k	1/16W
R54	NRSA63J-105X	M.G.RESISTOR	1M	1/16W
R56	NRSA63J-473X	M.G.RESISTOR	47k	1/16W
R57	NRSA63J-473X	M.G.RESISTOR	47k	1/16W
R65	NRSA63D-102X	M.G.RESISTOR	1k	1/16W
R66	NRSA63D-102X	M.G.RESISTOR	1k	1/16W
R67	NRSA63D-102X	M.G.RESISTOR	1k	1/16W
R68	NRSA63D-102X	M.G.RESISTOR	1k	1/16W
R69	NRSA63D-122X	M.G.RESISTOR	1.2k	1/16W
R70	NRSA63D-122X	M.G.RESISTOR	1.2k	1/16W
R101	NRSA63D-102X	M.G.RESISTOR	1k	1/16W
R102	NRSA63D-102X	M.G.RESISTOR	1k	1/16W
R103	NRSA63D-102X	M.G.RESISTOR	1k	1/16W
R104	NRSA63D-102X	M.G.RESISTOR	1k	1/16W
R105	NRSA63D-102X	M.G.RESISTOR	1k	1/16W
R106	NRSA63D-102X	M.G.RESISTOR	1k	1/16W
R111	NRSA63D-331X	M.G.RESISTOR	330	1/16W
R112	NRSA63D-331X	M.G.RESISTOR	330	1/16W
R113	NRSA63J-332X	M.G.RESISTOR	3.3k	1/16W
R114	NRSA63J-104X	M.G.RESISTOR	100k	1/16W
R115	NRSA63J-104X	M.G.RESISTOR	100k	1/16W
R116	NRSA63J-222X	M.G.RESISTOR	2.2k	1/16W
R117	NRSA63J-222X	M.G.RESISTOR	2.2k	1/16W
R118	NRSA63J-750X	M.G.RESISTOR	75	1/16W
R119	NRSA63J-680X	M.G.RESISTOR	68	1/16W
R120	NRSA63J-101X	M.G.RESISTOR	100	1/16W
R121	NRSA63J-101X	M.G.RESISTOR	100	1/16W
R122	NRSA63J-332X	M.G.RESISTOR	3.3k	1/16W
R123	NRSA63J-332X	M.G.RESISTOR	3.3k	1/16W
R124	NRSA63D-153X	M.G.RESISTOR	15k	1/16W

Symbol No.	Part No.	Part Name	Description	
R125	NRSA63D-153X	M.G.RESISTOR	15k	1/16W
R126	NRSA63D-153X	M.G.RESISTOR	15k	1/16W
R127	NRSA63D-153X	M.G.RESISTOR	15k	1/16W
R151	NRSA63J-273X	M.G.RESISTOR	27k	1/16W
R152	NRSA63J-274X	M.G.RESISTOR	270k	1/16W
R153	NRSA63J-274X	M.G.RESISTOR	270k	1/16W
R154	NRSA63J-105X	M.G.RESISTOR	1M	1/16W
R156	NRSA63J-473X	M.G.RESISTOR	47k	1/16W
R157	NRSA63J-473X	M.G.RESISTOR	47k	1/16W
R165	NRSA63D-102X	M.G.RESISTOR	1k	1/16W
R166	NRSA63D-102X	M.G.RESISTOR	1k	1/16W
R167	NRSA63D-102X	M.G.RESISTOR	1k	1/16W
R168	NRSA63D-102X	M.G.RESISTOR	1k	1/16W
R169	NRSA63D-122X	M.G.RESISTOR	1.2k	1/16W
R170	NRSA63D-122X	M.G.RESISTOR	1.2k	1/16W
C1	NCB31HK-222X	CER.CAPACITOR	2200p	50V
C12	NFV72CK-474X	FILM CAPACITOR	0.47	160V
C14	NFV72CK-474X	FILM CAPACITOR	0.47	160V
C16	NDC31HJ-101X	CER.CAPACITOR	100p	50V
C17	NDC31HJ-101X	CER.CAPACITOR	100p	50V
C18	NCB31CK-104X	CER.CAPACITOR	0.1	16V
C19	NBE71CM-476X	TAN.CAPACITOR	47	16V
C20	NBE71CM-476X	TAN.CAPACITOR	47	16V
C21	NCB31CK-104X	CER.CAPACITOR	0.1	16V
C22	NDC31HJ-101X	CER.CAPACITOR	100p	50V
C23	NCB31CK-104X	CER.CAPACITOR	0.1	16V
C24	NBE71CM-476X	TAN.CAPACITOR	47	16V
C25	NCB31CK-104X	CER.CAPACITOR	0.1	16V
C26	NBE71CM-476X	TAN.CAPACITOR	47	16V
C27	NCB41CM-106X	CER.CAPACITOR	10	16V
C51	NEH71HM-105X	E.CAPACITOR	1	50V
C52	NEH71HM-105X	E.CAPACITOR	1	50V
C55	NCB31HK-222X	CER.CAPACITOR	2200p	50V
C56	NCB31HK-222X	CER.CAPACITOR	2200p	50V
C101	NCB31HK-222X	CER.CAPACITOR	2200p	50V
C112	NFV72CK-474X	FILM CAPACITOR	0.47	160V
C114	NFV72CK-474X	FILM CAPACITOR	0.47	160V
C116	NDC31HJ-101X	CER.CAPACITOR	100p	50V
C117	NDC31HJ-101X	CER.CAPACITOR	100p	50V
C118	NCB31CK-104X	CER.CAPACITOR	0.1	16V
C119	NBE71CM-476X	TAN.CAPACITOR	47	16V
C120	NBE71CM-476X	TAN.CAPACITOR	47	16V
C121	NCB31CK-104X	CER.CAPACITOR	0.1	16V
C122	NDC31HJ-101X	CER.CAPACITOR	100p	50V
C123	NCB31CK-104X	CER.CAPACITOR	0.1	16V
C124	NBE71CM-476X	TAN.CAPACITOR	47	16V
C125	NCB31CK-104X	CER.CAPACITOR	0.1	16V
C126	NBE71CM-476X	TAN.CAPACITOR	47	16V
C127	NCB41CM-106X	CER.CAPACITOR	10	16V
C151	NEH71HM-105X	E.CAPACITOR	1	50V
C152	NEH71HM-105X	E.CAPACITOR	1	50V
C155	NCB31HK-222X	CER.CAPACITOR	2200p	50V
C156	NCB31HK-222X	CER.CAPACITOR	2200p	50V
C202	NBE71CM-476X	TAN.CAPACITOR	47	16V
C203	NCB31CK-104X	CER.CAPACITOR	0.1	16V
C205	NBE71CM-476X	TAN.CAPACITOR	47	16V
C206	NCB31CK-104X	CER.CAPACITOR	0.1	16V
L201	NQL024J-100X	COIL	10uH	
L202	NQL024J-100X	COIL	10uH	
S1	QSW0811-001	SLIDE SWITCH	INPUT SELECT 1	
S101	QSW0811-001	SLIDE SWITCH	INPUT SELECT 2	
CN33	QGA1201C2-03X	CONNECTOR	3PIN	
CN104	QGF0508F1-20X	CONNECTOR	20PIN	
CN107	QGA1201C2-03X	CONNECTOR	3PIN	
CN108	QGA1201C2-04X	CONNECTOR	4PIN	
CN801	QGA1201C2-06X	CONNECTOR	6PIN	

Symbol No.	Part No.	Part Name	Description
TP1	NNZ0009-001X	TEST POINT	TP1-104
JK601	QNZ0097-001	JACK	DV TERMINAL
K601	NQR0351-001X	FERRITE BEADS	K601,602
TB601	PGZ02228	EARTH LUG	

6.33 XLR BOARD ASSEMBLY PARTS LIST 40

CK263300A4 40

Symbol No.	Part No.	Part Name	Description	
C1	NDC31HJ-221X	CER.CAPACITOR	220p	50V
C2	NDC31HJ-221X	CER.CAPACITOR	220p	50V
C3	NDC31HJ-221X	CER.CAPACITOR	220p	50V
C4	NDC31HJ-221X	CER.CAPACITOR	220p	50V
L1	NQL124J-101X	COIL	100uH	
L2	NQL124J-101X	COIL	100uH	
CN107	QGA1201F2-03X	CONNECTOR	3PIN	
JK301	QNZ0414-001	CONNECTOR	AUDIO CH1	
K1	NQR0351-001X	FERRITE BEADS	K1,2	

6.34 PWR JUNC BOARD ASSEMBLY PARTS LIST 41

CK263700A1 41

Symbol No.	Part No.	Part Name	Description	
D1	SB140L-6395	DIODE	SANYO	
C1	QEUA1EM-478	E.CAPACITOR	4700	25V
C2	NCB31EK-473X	CER.CAPACITOR	0.047	25V
C3	NCB31EK-473X	CER.CAPACITOR	0.047	25V
TH1	QAD0115-R40Z	THERMISTOR	0.4	
CN41	QGA2001C1-05	CONNECTOR	5PIN	
CN110	QGA1501C1-06	CONNECTOR	6PIN	
CN111	QGA2001C1-02	CONNECTOR	2PIN	
CN113	QGA3901C1-02	CONNECTOR	2PIN	
K1	NQR0351-001X	FERRITE BEADS	K1,2	
TB1	SQMX002-001Z	TERMINAL		

6.35 CONNECT BOARD ASSEMBLY PARTS LIST 42

CK263700A2 42

Symbol No.	Part No.	Part Name	Description
IC1	CLC450AJM5-X	I.C.(M)	NATIONAL SEMICO
IC2	CLC450AJM5-X	I.C.(M)	NATIONAL SEMICO
IC3	CLC450AJM5-X	I.C.(M)	NATIONAL SEMICO
D1	MA143A-X	DIODE	MATSUSHITA
D2	MA143A-X	DIODE	MATSUSHITA
D3	MA143A-X	DIODE	MATSUSHITA
D4	MA143A-X	DIODE	MATSUSHITA
D5	MA143A-X	DIODE	MATSUSHITA
D6	MA143A-X	DIODE	MATSUSHITA
D7	MA143A-X	DIODE	MATSUSHITA
D8	MA143A-X	DIODE	MATSUSHITA
D9	MA143A-X	DIODE	MATSUSHITA
R1	NRSA63D-102X	M.G.RESISTOR	1k 1/16W
R2	NRSA63D-102X	M.G.RESISTOR	1k 1/16W
R3	NRSA63D-101X	M.G.RESISTOR	100 1/16W
R4	NRSA63D-104X	M.G.RESISTOR	100k 1/16W
R5	NRSA63D-750X	M.G.RESISTOR	75 1/16W
R6	NRSA63D-102X	M.G.RESISTOR	1k 1/16W
R7	NRSA63D-102X	M.G.RESISTOR	1k 1/16W
R8	NRSA63D-101X	M.G.RESISTOR	100 1/16W
R9	NRSA63D-104X	M.G.RESISTOR	100k 1/16W
R10	NRSA63D-103X	M.G.RESISTOR	10k 1/16W
R11	NRSA63D-224X	M.G.RESISTOR	220k 1/16W
R12	NRSA63D-750X	M.G.RESISTOR	75 1/16W
R13	NRSA63D-102X	M.G.RESISTOR	1k 1/16W
R14	NRSA63D-102X	M.G.RESISTOR	1k 1/16W
R15	NRSA63D-101X	M.G.RESISTOR	100 1/16W
R16	NRSA63D-104X	M.G.RESISTOR	100k 1/16W
R17	NRSA63D-750X	M.G.RESISTOR	75 1/16W
C1	NBE71CM-476X	TAN.CAPACITOR	47 16V
C2	NBE71CM-476X	TAN.CAPACITOR	47 16V
C3	NDC31HJ-561X	CER.CAPACITOR	560p 50V
C4	NDC31HJ-561X	CER.CAPACITOR	560p 50V
C5	NCB31EK-473X	CER.CAPACITOR	0.047 25V
C6	NCB31EK-473X	CER.CAPACITOR	0.047 25V
C7	NCB31EK-473X	CER.CAPACITOR	0.047 25V
C8	NCB31EK-473X	CER.CAPACITOR	0.047 25V
C9	NCB31EK-473X	CER.CAPACITOR	0.047 25V
C10	NCB31EK-473X	CER.CAPACITOR	0.047 25V
C11	NCB31CK-104X	CER.CAPACITOR	0.1 16V
L1	NQL024J-4R7X	COIL	4.7uH
L2	NQL024J-4R7X	COIL	4.7uH
CN103	QGF1004F1-16	CONNECTOR	16PIN
JK1	QNZ0157-001	BNC CONNECTOR	Y/C,BNC
JK4	QNN0251-001	JACK	PIN
K1	NQR0351-001X	FERRITE BEADS	K1,2
LG1	SC43876-008	LUG ASSY	

6.36 EAR.J BOARD ASSEMBLY PARTS LIST 43

CK263700A3 43

Symbol No.	Part No.	Part Name	Description
C1	NDC31HJ-181X	CER.CAPACITOR	180p 50V
C2	NDC31HJ-181X	CER.CAPACITOR	180p 50V
CN108	QGA1501F1-04	CONNECTOR	4PIN
JK401	QNS0095-001	3.5 JACK	EARPHONE

6.37 CT BOARD ASSEMBLY PARTS LIST 50

CK264400A1 50

Symbol No.	Part No.	Part Name	Description
IC110	NJM2068M-D-X	I.C.(M)	JRC
R101	NRSA63D-102X	M.G.RESISTOR	1k 1/16W
R110	NRSA63D-104X	M.G.RESISTOR	100k 1/16W
R112	NRSA63D-472X	M.G.RESISTOR	4.7k 1/16W
R113	NRSA63D-104X	M.G.RESISTOR	100k 1/16W
R114	NRSA63D-392X	M.G.RESISTOR	3.9k 1/16W
R115	NRSA63D-222X	M.G.RESISTOR	2.2k 1/16W
R116	NRSA63D-101X	M.G.RESISTOR	100 1/16W
R117	NRSA63D-470X	M.G.RESISTOR	47 1/16W
VR101	QVQ0162-A14	VAL.RESISTOR	10k INCOM LEVEL
C110	QEQ61CM-106Z	E.CAPACITOR	10 16V
C111	QEQ61CM-106Z	E.CAPACITOR	10 16V
C112	NDC31HJ-102X	CER.CAPACITOR	1000p 50V
C113	NDC31HJ-102X	CER.CAPACITOR	1000p 50V
S101	QSW0312-002	SLIDE SWITCH	INCOM MIC
S102	QSW0312-002	SLIDE SWITCH	INCOM MIC SEL
S103	QSW0608-001	SWITCH	MODE SELECT
S104	QSW0907-001	PUSH SWITCH	CALL
CN74	QGF1004F1-20	CONNECTOR	20PIN
CN91	QGA1501F1-02	CONNECTOR	2PIN
K110	NQR0022-003X	FERRITE BEADS	

6.38 P.SEL BOARD ASSEMBLY PARTS LIST [5][1]

CK264400A2 [5][1]

Symbol No.	Part No.	Part Name	Description
D201	MA142WK-X	DIODE	MATSUSHITA
D211	HZM36NB-W	ZENER DIODE	HITACHI
D212	HZM36NB-W	ZENER DIODE	HITACHI
D213	HZM36NB-W	ZENER DIODE	HITACHI
D214	HZM36NB-W	ZENER DIODE	HITACHI
R201	NRSA63D-223X	M.G.RESISTOR	22k 1/16W
R202	NRSA63D-223X	M.G.RESISTOR	22k 1/16W
R203	NRSA63D-223X	M.G.RESISTOR	22k 1/16W
S201	QSW0906-001	TOGGLE SWITCH	POWER SELECT
CN82	QGA1501C1-03	CONNECTOR	3PIN
CN84	QGA3901C1-02	CONNECTOR	2PIN
CN85	QGA3901C1-04	CONNECTOR	4PIN
CN86	QGA3901C1-02	CONNECTOR	2PIN
CN113	QGA3901C1-03	CONNECTOR	3PIN

6.39 26P BOARD ASSEMBLY PARTS LIST [5][2]

CK264400A3 [5][2]

Symbol No.	Part No.	Part Name	Description
R301	NRSA63D-750X	M.G.RESISTOR	75 1/16W
CN84	QGA3901C1-02	CONNECTOR	2PIN
CN90	QGF1004F1-26	CONNECTOR	26PIN
AN301	QUB220-06MPXL	C.WIRE ASS'Y	
JK81	QNZ0245-001	CONNECTOR	26PIN TERMINAL

6.40 TA3 BOARD ASSEMBLY PARTS LIST [5][3]

CK264400A9 [5][3]

Symbol No.	Part No.	Part Name	Description
D93	VRPG3312X	L.E.D.	SUTANRE
CN75	QGA1501C1-03	CONNECTOR	3PIN

6.41 TA4 BOARD ASSEMBLY PARTS LIST [5][4]

CK264400A10 or CK264400AA [5][4]

Symbol No.	Part No.	Part Name	Description
D94	VRPG3312X	L.E.D.	SUTANRE
CN76	QGA1501C1-03	CONNECTOR	3PIN

6.42 BNC BOARD ASSEMBLY PARTS LIST (ADAPTER) [5][5]

CK264400A6 [5][5]

Symbol No.	Part No.	Part Name	Description
CN79	QGA1501F1-02	CONNECTOR	2PIN
K71	NQR0022-003X	FERRITE BEADS	

6.43 CN BOARD ASSEMBLY PARTS LIST [5][6]

CK264400A7 [5][6]

Symbol No.	Part No.	Part Name	Description
CN72	QGA1501C1-08	CONNECTOR	8PIN
CN77	QGA1501C1-06	CONNECTOR	6PIN
CN78	QGA1501C1-10	CONNECTOR	10PIN
CN83	QGA1501C1-06	CONNECTOR	6PIN
CN90	QGF1003C1-26	CONNECTOR	26PIN

6.44 AD BOARD ASSEMBLY PARTS LIST [5][7]

CK264400A8 [5][7]

Symbol No.	Part No.	Part Name	Description	
IC1	TC74HC165AF-X	I.C.(M)	TOSHIBA	
IC2	TC74HC165AF-X	I.C.(M)	TOSHIBA	
IC3	BU4094BCFV-X	I.C.(M)	ROHM	
IC4	NJM319M-X	I.C.(M)	JRC	
IC5	DS8921M-X	I.C.(M)	NATIONAL SEMICO	
IC7	CLC450AJM5-X	I.C.(M)	NATIONAL SEMICO	
IC8	NJM4560M-X	I.C.(M)	JRC	
IC9	AN77L05M-X	I.C.(M)	MATSUSHITA	
Q1	DTC124EUA-X	TRANSISTOR	ROHM	
Q2	DTC124EUA-X	TRANSISTOR	ROHM	
Q3	DTC124EUA-X	TRANSISTOR	ROHM	
Q4	2SB1132/QR/-W	TRANSISTOR	ROHM	
Q6	DTA124EUA-X	TRANSISTOR	ROHM	
Q7	DTA124EUA-X	TRANSISTOR	ROHM	
Q8	DTC124EUA-X	TRANSISTOR	ROHM	
D1	MA143A-X	DIODE	MATSUSHITA	
D2	MA143A-X	DIODE	MATSUSHITA	
D3	MA143A-X	DIODE	MATSUSHITA	
D4	MA143A-X	DIODE	MATSUSHITA	
D5	HZM9C-X	ZENER DIODE	HITACHI	
D6	HZM6C-X	ZENER DIODE	HITACHI	
D7	HZM6C-X	ZENER DIODE	HITACHI	
D8	HZM6C-X	ZENER DIODE	HITACHI	
D9	HZM6C-X	ZENER DIODE	HITACHI	
D10	MA143A-X	DIODE	MATSUSHITA	
D11	MA143A-X	DIODE	MATSUSHITA	
D12	MA143A-X	DIODE	MATSUSHITA	
D15	MA143A-X	DIODE	MATSUSHITA	
R1	NRSA63D-271X	M.G.RESISTOR	270	1/16W
R2	NRSA63D-271X	M.G.RESISTOR	270	1/16W
R3	NRSA63D-223X	M.G.RESISTOR	22k	1/16W
R4	NRSA63D-223X	M.G.RESISTOR	22k	1/16W
R5	NRSA63D-223X	M.G.RESISTOR	22k	1/16W
R6	NRSA63D-223X	M.G.RESISTOR	22k	1/16W
R7	NRSA63D-223X	M.G.RESISTOR	22k	1/16W
R8	NRSA63D-223X	M.G.RESISTOR	22k	1/16W
R9	NRSA63D-223X	M.G.RESISTOR	22k	1/16W
R10	NRSA63D-223X	M.G.RESISTOR	22k	1/16W
R11	NRSA63D-223X	M.G.RESISTOR	22k	1/16W
R12	NRSA63D-473X	M.G.RESISTOR	47k	1/16W
R13	NRSA63D-473X	M.G.RESISTOR	47k	1/16W
R14	NRSA63D-102X	M.G.RESISTOR	1k	1/16W
R15	NRSA63D-103X	M.G.RESISTOR	10k	1/16W
R17	NRSA63D-102X	M.G.RESISTOR	1k	1/16W
R18	NRSA63D-681X	M.G.RESISTOR	680	1/16W
R19	NRSA63D-750X	M.G.RESISTOR	75	1/16W
R20	NRSA63D-102X	M.G.RESISTOR	1k	1/16W
R21	NRSA63D-102X	M.G.RESISTOR	1k	1/16W
R22	NRSA63D-750X	M.G.RESISTOR	75	1/16W
R23	NRSA63D-101X	M.G.RESISTOR	100	1/16W
R24	NRSA63D-101X	M.G.RESISTOR	100	1/16W
R25	NRSA63D-103X	M.G.RESISTOR	10k	1/16W
R26	NRSA63D-104X	M.G.RESISTOR	100k	1/16W
R27	NRSA63D-104X	M.G.RESISTOR	100k	1/16W
R28	NRSA63D-473X	M.G.RESISTOR	47k	1/16W
R29	NRSA63D-103X	M.G.RESISTOR	10k	1/16W
R31	NRSA63D-473X	M.G.RESISTOR	47k	1/16W
R32	NRSA63D-102X	M.G.RESISTOR	1k	1/16W
R33	NRSA63D-473X	M.G.RESISTOR	47k	1/16W
R35	NRSA63J-510X	M.G.RESISTOR	51	1/16W
R36	NRSA63J-510X	M.G.RESISTOR	51	1/16W
R37	NRSA63D-153X	M.G.RESISTOR	15k	1/16W
R38	NRSA63D-153X	M.G.RESISTOR	15k	1/16W
R50	NRSA63D-221X	M.G.RESISTOR	220	1/16W
R52	NRSA63D-221X	M.G.RESISTOR	220	1/16W
R54	NRSA63D-562X	M.G.RESISTOR	5.6k	1/16W
R55	NRSA63D-472X	M.G.RESISTOR	4.7k	1/16W
R60	NRSA63D-471X	M.G.RESISTOR	470	1/16W
R62	NRSA63D-271X	M.G.RESISTOR	270	1/16W

Symbol No.	Part No.	Part Name	Description	
R63	NRSA63D-221X	M.G.RESISTOR	220	1/16W
R65	NRSA63D-271X	M.G.RESISTOR	270	1/16W
R66	NRSA63D-221X	M.G.RESISTOR	220	1/16W
R68	NRSA63J-225X	M.G.RESISTOR	2.2M	1/16W
C1	NCB31CK-473X	CER.CAPACITOR	0.047	16V
C2	NCB31CK-473X	CER.CAPACITOR	0.047	16V
C3	NCB31CK-473X	CER.CAPACITOR	0.047	16V
C4	NCB31CK-473X	CER.CAPACITOR	0.047	16V
C5	NCB31CK-473X	CER.CAPACITOR	0.047	16V
C6	NCB31CK-473X	CER.CAPACITOR	0.047	16V
C7	NCB31CK-473X	CER.CAPACITOR	0.047	16V
C8	NCB31CK-473X	CER.CAPACITOR	0.047	16V
C9	NDC31HJ-102X	CER.CAPACITOR	1000p	50V
C10	NCB31CK-473X	CER.CAPACITOR	0.047	16V
C11	NCB31CK-473X	CER.CAPACITOR	0.047	16V
C12	NCB41CM-106X	CER.CAPACITOR	10	16V
C13	NCB41CM-106X	CER.CAPACITOR	10	16V
C14	NCB41CM-106X	CER.CAPACITOR	10	16V
C15	NCB41CM-106X	CER.CAPACITOR	10	16V
C51	NBE71CM-476X	TAN.CAPACITOR	47	16V
C52	NBE71CM-476X	TAN.CAPACITOR	47	16V
C53	NBE61EM-226X	TAN.CAPACITOR	22	25V
C54	NBE61VM-156X	TAN.CAPACITOR	15	35V
C55	NBE71CM-476X	TAN.CAPACITOR	47	16V
C56	NCB31CK-473X	CER.CAPACITOR	0.047	16V
C58	NCB31CK-473X	CER.CAPACITOR	0.047	16V
C60	NCB30JK-474X	CER.CAPACITOR	0.47	6.3V
CN71	QGF0508F2-30X	CONNECTOR	30PIN	
CN74	QGF1004F2-20X	CONNECTOR	20PIN	
CN75	QGA1501F2-03W	CONNECTOR	3PIN	
CN76	QGA1501F2-03W	CONNECTOR	3PIN	
CN77	QGA1501F2-06W	CONNECTOR	6PIN	
CN78	QGA1501F2-10W	CONNECTOR	10PIN	
CN79	QGA2001F2-02X	CONNECTOR	2PIN	
CN80	QGA1501F2-04W	CONNECTOR	4PIN	
CN81	QGA1501F2-02W	CONNECTOR	2PIN	
CN82	QGA1501F2-03W	CONNECTOR	3PIN	
K1	NQR0022-003X	FERRITE BEADS	K1-14	
T1	QQR0035-001	MIC. TRANSF.		
T2	QQR0035-001	MIC. TRANSF.		

SECTION 7
PACKING

7.1 PACKING ASSEMBLY M 7

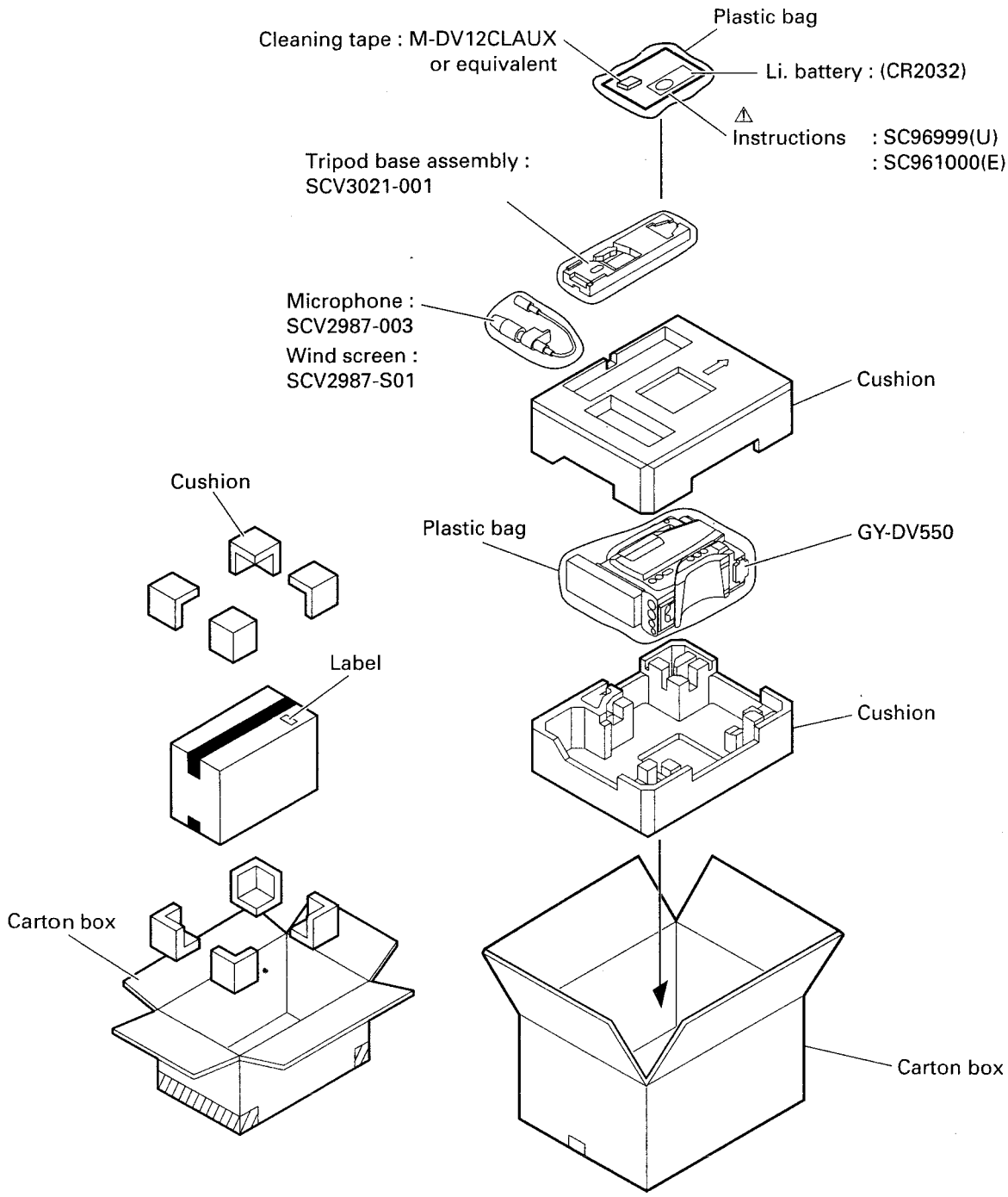

7.2 FACTORY SETTING OF SWITCH AND VR

□ : Factory setting

SW and VR name	Factory setting		
AUDIO LEVEL CH-1 VR	10		
ZEBRA	[ON]	OFF	SKIN AREA
FILTER	[1. 3200K]	2. 5600K+1/8ND	3. 5600K+1/64ND
OPERATE SW	ON	[OFF]	
VTR	SAVE	[STBY]	
GAIN	H	M	[L]
OUTPUT	BARS/AUTO KNEE OFF	CAM/AUTO KNEE OFF	[CAM/AUTO KNEE ON]
WHT. BAL	PRST	[A]	B
AUTO IRIS	BACK L	[NORMAL]	SPOT L
BLACK	STRETCH	[NORMAL]	COMPRESS
ALARM VR	CENTER		
MONITOR VR	CENTER		
MONITOR SELECT	CH-1	[MIX]	CH-2
LIGHT	[ON]	OFF	
COUNTER	CTL	[TC]	UB
AUDIO LEVEL CH-1/CH-2 VR	CENTER		
AUDIO SELECT CH-1/CH-2	[AUTO]	MANUAL	
AUDIO INPUT CH-1	FRONT	[REAR]	
AUDIO INPUT CH-2	[FRONT]	REAR	
VTR SELECT	[INT]	PARA	EXT
VTR INPUT	[CAM]	AUX	
TC GENE.	[REC/PRST]	FREE/PRST	REGEN
POWER	RM	[OFF]	DC IN/BATT.
INCOM MIC	[ON]	OFF	
INCOM LEVEL VR	CENTER		
MODE	[RM]	VTR	
INCOM MIC	[CARBON]	DYNAMIC	
AUDIO IN FRONT	LINE	MIC	[MIC +48V ON]
AUDIO IN REAR	[LINE]	MIC	MIC +48V ON

SECTION 8
TECHNICAL INFORMATION

8.1 COMPARISON BETWEEN GY-DV550 AND GY-DV500

DIFFERENCES	GY-DV500U/E	GY-DV550U/E	DESCRIPTION
FUNCTION			
Resolution of VIDEO output	500 TV line	750 TV line	
VIDEO output S/N	53dB	62dB	
Optical filter	3200K, 5600K, 5600K+1/64ND	3200K, 5600K+1/8ND, 5600K+1/64ND	
Knee point	100%	85-100%, 5% step adjustable	
ZEBRA on the bars	not provided	provided	
TC IN/OUT	not provided	provided	
26pin camera terminal	not provided	provided	
Intercom	not provided	provided	
GENLOCK	not provided	provided	
VIDEO IN	not provided	provided	Composite
Superimpose of VF information on monitor output	not provided	provided	Camera menu
External VCR connection	not provided	provided	R/G/B, Y/C, COMPONENT output
External camera control	not provided	provided	
Time date stamp	not provided	provided	
Prompter output	not provided	provided	
CCU connection	not provided	provided	
Audio input	2CH 3input	2CH 2input	
Audio recording reference level	-20dB	-20dB/-12dB switchable	
Earphone jack	monaural jack	stereo jack	
ACCESSORY			
Attachable tripod base	KA-510 type	New type (Part number:see page 7-1)	same as DV700 SONY compatible type

8.2 COMPARISON LIST OF THE BOARD BETWEEN GY-DV550 AND GY-DV500

BOARD NAME	GY-DV500U	GY-DV550U	GY-DV500E	GY-DV550E	REMARKS
PR & MDA	SLK2088-01-01A	←	←	←	
DCDC	SLK2088-02-01A	←	←	←	
ROM	SLK2088-03-U5A	←	SLK2088-03-E5A	←	
CONN.	SLK2088-04-00A	←	←	←	
DV MAIN	SLK2087-U3A	←	SLK2087-E3A	←	
ISB	SCK2604-02-00B	CK263100A2	*1	*2	
ISG	SCK2604-03-00B	CK263100A3	*1	*2	
ISR	SCK2604-04-00B	CK263100A4	*1	*2	
TG	SCK2604-01-N0B	CK2631U0A1	SCK2604-01-P0B	CK2631E0A1	
CAM	–	CK2634U0A1	–	CK2634E0A1	
CAM1	SCK2605-01-N1B	–	SCK2605-01-P1B	–	
CAM2	SCK2605-02-N0B	–	SCK2605-02-P0B	–	
SE	–	CK2634U0D2	–	CK2634E0D2	
PS	–	CK263301A1	–	*2	
PS1	SCK2609-01-01B	–	*1	–	
PS2	SCK2609-02-01B	–	*1	–	
ROM	SCK2607-01-00B	–	*1	–	
IF2	–	CK263300A2	–	*2	
DPR	–	CK2636U0A1	–	CK2636E0A1	
JOG	SCK2607-02-00B	←	←	←	
IF	SCK2607-03-00B	←	←	←	
SWRU	SCK2607-04-00B	←	←	←	
SWF	SCK2606-01-00B	←	←	←	
SWRM	SCK2606-02-00B	←	←	←	
SERB	SCK2606-03-00B	←	←	←	
SWPW	SCK2606-05-00B	←	←	←	
MIC	SCK2606-06-00B	←	←	←	
BNC	SCK2606-07-00B	←	←	←	
FL	SC84529-001	←	←	←	
SS/CP	–	CK2632U0B	–	CK2632E0B	
VIDEO/SYSCON	SLK2092-U3A	–	SLK2092-P3A	–	
AUDIO/LCD	SLK2091-I0C	CK2635U0A	*1	CK2635E0A	
REG	SLK2095-00B	CK263300A5	*1	*2	
MT	–	CK263600A2	–	*2	
MOTHER	SLK2098-01-00A	–	*1	–	
OPE	SLK2098-02-00A	CK263400A3	*1	*2	
SEN1	SLK2098-03-00A	CK263400A4	*1	*2	
SENS2	SLK2098-04-00A	CK263400A5	*1	*2	
REMOTE	SLK2098-05-00C	CK263400A6	*1	*2	
AU JUNK	SLK2094-01-00B	CK263300A3	*1	*2	
XLR	SLK2094-02-00A	CK263300A4	*1	*2	
PWR JUNC	SLK2093-01-00A	CK263700A1	*1	*2	
CONNECT	SLK2093-02-00A	CK263700A2	*1	*2	
EAR.J	SLK2093-03-00A	CK263700A3	*1	*2	
CT	–	CK264400A1	–	*2	
P.SEL	–	CK264400A2	–	*2	
26P	–	CK264400A3	–	*2	
TA3	–	CK264400A9	–	*2	
TA4	–	CK264400A10	–	*2	
BNC	–	CK264400A6	–	*2	
CN	–	CK264400A7	–	*2	
AD	–	CK264400A8	–	*2	

Note ←:same as left *1:same as DV500U *2:same as DV550U

VIDE-V27525

JVC

SERVICE MANUAL

DV CAMCORDER

GY-DV500U/GY-DV500E

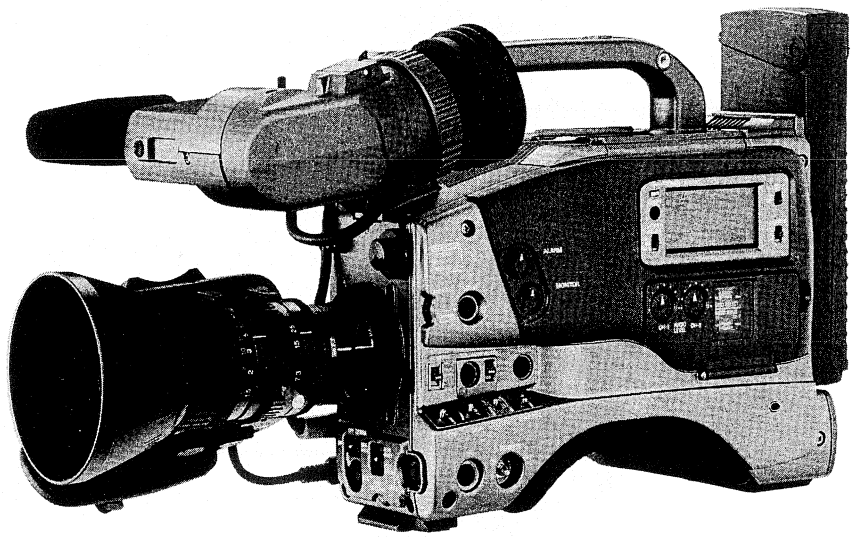

The photo shows the GY-DV500 DV camcorder with an optional lens and viewfinder.

Mini DV

PROFESSIONAL DV

COPYRIGHT © 1999

No. 60125
November 1999

TABLE OF CONTENTS

Section	Title	Page
Important Safety Precautions		
INSTRUCTIONS		
SECTION 1 SERVICE CAUTIONS AND DISASSEMBLY		
1.1	RESETTING THE POWER CIRCUIT PROTECTION BREAKER	1-1
1.2	REMOVING THE EXTERIOR COVERS	1-1
1.3	LAYOUTS OF THE MAJOR BOARDS	1-2
1.4	REMOVING THE OPTICAL BLOCK ASSEMBLY AND THE OPTICAL FILTER ASSEMBLY	1-3
1.5	REMOVING MAJOR BOARDS FROM THE CAMERA	1-4
1.6	REMOVING THE MAJOR BOARDS FROM THE VCR	1-6
1.7	DISASSEMBLY OF THE VCR UNIT	1-8
1.8	TAPE EJECTION IN CASE OF EMERGENCY	1-10
1.9	CAUTION FOR REPLACING THE DV MAIN BOARD AND VIDEO SYSCON BOARD	1-12
1.10	FUNCTIONS OF INTERNAL SWITCHES	1-13
1.11	MODES REQUIRED IN SERVICING	1-14
1.12	CHANGING THE COLOR MATRIX SETTING	1-16
1.13	SERVICE MENU	1-18
1.14	ALARM DETECTION METHODS	1-22
1.15	BATTERY POWER DETECTION METHODS	1-23
1.16	WARNING CODES	1-23
1.17	ANALYSIS OF BLOCK NOISE (SYMPTOMS: POOR VIDEO, ABSCNCE OF AUDIO)	1-26
SECTION 2 MECHANISM ADJUSTMENTS		
2.1	BERORE ADJUSTMENTS	2-1
2.2	BASICS OF MECHANISM DISASSAMBLY/ASSEMBLY	2-2
2.3	MECHANISM TIMIN CHART	2-4
2.4	MAINTENANCE AND INSPECTION OF MAJOR PARTS	2-5
2.5	PERIODICAL MAINTENANCE	2-8
2.6	DISASSEMBLY/ASSEMBLY OF MECHANISM ASSEMBLY	2-9
2.7	REPLACEMENT OF MAJOR PARTS	2-12
2.8	CONFIRMATION AND ADJUSTMENT OF MECHANISM PHASES	2-27
2.9	MECHANISM DISASSEMBLY/ASSEMBLY SHEET	2-28
2.10	DISASSEMBLY PROCEDURE LIST	2-30
2.11	TORQUE ADJUSTMENTS	2-31
2.12	COMPATIBILITY ADJUSTMENT	2-32
SECTION 3 ELECTRICAL ADJUSTMENTS		
3.1	FLOWCHART OF ELECTRICAL ADJUSTMENTS	3-1
3.2	FUNCTIONS REQUIRED FOR ADJUSTMENTS, SETUP	3-2
3.3	STANDARD SETUP	3-3
3.4	ADJUSTMENT MENU	3-3
3.5	CAMERA ADJUSTMENTS	3-5
3.6	VCR ADJUSTMENTS	3-11
3.7	DV ADJUSTMENTS (USING ADJUSTMENT SOFTWARE)	3-14

Section	Title	Page
SECTION 4 CHARTS AND DIAGRAMS		
4.1	INDEX TO PAGES OF MAIN BOARDS AND CIRCUIT BOARD LOCATION	4-3
4.2	OVERALL WIRING DIAGRAM (1/2)	4-4
	• OVERALL WIRING DIAGRAM (2/2)	4-5
4.3	ISB/ISG/ISR SCHEMATIC DIAGRAM 11/12/13	4-6
4.4	ISB/ISG/ISR CIRCUIT BOARD	4-7
4.5	TG(Timing Generator) SCHEMATIC DIAGRAM 14	4-8
4.6	TG CIRCUIT BOARD	4-9
4.7	CAM1(CAMera 1) SCHEMATIC DIAGRAM (1/2) 15	4-10
	• CAM1 SCHEMATIC DIAGRAM (2/2) 15	4-11
4.8	CAM1 CIRCUIT BOARD	4-12
4.9	CAM2(CAMera 2) SCHEMATIC DIAGRAM (1/3) 16	4-14
	• CAM2 SCHEMATIC DIAGRAM (2/3) 16	4-15
	• CAM2 SCHEMATIC DIAGRAM (3/3) 16	4-16
4.10	CAM2 CIRCUIT BOARD	4-17
4.11	PS(Power Supply)1, PS2 SCHEMATIC DIAGRAM (1/2) 17/18	4-19
	• PS1, PS2 SCHEMATIC DIAGRAM (2/2) 17/18	4-20
4.12	PS1, PS2 CIRCUIT BOARD	4-21
4.13	IF(InterFace), ROM(Read Only Memory) SCHEMATIC DIAGRAM 21/19	4-22
4.14	IF, ROM CIRCUIT BOARD	4-23
4.15	SWRU, JOG SCHEMATIC DIAGRAM 22/20	4-24
4.16	SWF, SWRM, SWRB, SWPW, MIC, BNC SCHEMATIC DIAGRAM 23/24/25/26/27/28	4-25
4.17	SWRU, JOG, SWF, SWRM, SWRB, SWPW, MIC, BNC, FL CIRCUIT BOARD	4-26
4.18	VIDEO/SYSCON SCHEMATIC DIAGRAM (1/2) 31	4-27
	• VIDEO/SYSCON SCHEMATIC DIAGRAM (2/2) 31	4-28
4.19	VIDEO/SYSCON CIRCUIT BOARD	4-29
4.20	AUDIO/LCD SCHEMATIC DIAGRAM (1/2) 32	4-30
	• AUDIO/LCD SCHEMATIC DIAGRAM (2/2) 32	4-31
4.21	AUDIO/LCD CIRCUIT BOARD	4-32
	• AUDIO/LCD CIRCUIT BOARD (FOR SERIAL No. X X X X0732 AND AFTER OF GY-DV500U, X X X X0840 AND AFTER OF GY-500E)	4-32-2
4.22	REG(REGulater) SCHEMATIC DIAGRAM 33	4-34
4.23	REG CIRCUIT BOARD	4-35
4.24	MOTHER SCHEMATIC DIAGRAM 34	4-36
4.25	MOTHER, AU JUNK CIRCUIT BOARD	4-37
4.26	AU JUNK SCHEMATIC DIAGRAM 39	4-38
4.27	PWR JUNC, OPE(OPEration) SCHEMATIC DIAGRAM 41/35	4-39
4.28	CONNECT, REMOTE, XLR, EAR.J, SEN1, SENS2 SCHEMATIC DIAGRAM 42/38/40/43/36/37	4-40
4.29	OPE, PWR JUNC, CONNECT, REMOTE, XLR, EAR.J, SEN1, SENS2 CIRCUIT BOARD	4-41
4.30	VTR UNIT OVERALL WIRING DIAGRAM	4-42
4.31	DV MAIN SCHEMATIC DIAGRAM (1/7) 10	4-43
	• DV MAIN SCHEMATIC DIAGRAM (2/7) 10	4-44
	• DV MAIN SCHEMATIC DIAGRAM (3/7) 10	4-45
	• DV MAIN SCHEMATIC DIAGRAM (4/7) 10	4-46
	• DV MAIN SCHEMATIC DIAGRAM (5/7) 10	4-47
	• DV MAIN SCHEMATIC DIAGRAM (6/7) 10	4-48
	• DV MAIN SCHEMATIC DIAGRAM (7/7) 10	4-49
4.32	DV MAIN CIRCUIT BOARD	4-50
	• DV MAIN CIRCUIT BOARD (FOR SERIAL No. X X X X0332 AND AFTER OF GY-DV500U, X X X X0545 AND AFTER OF GY-DV500E)	4-50-2
4.33	PR & MDA SCHEMATIC DIAGRAM (1/2) 01	4-52
	• PR(Pre Rec) & MDA(Motor Drive Amp.) SCHEMATIC DIAGRAM (2/2) 01	4-53

4.34 PR & MDA CIRCUIT BOARD 4-54
4.35 ROM, CONN. SCHEMATIC DIAGRAM [0][3]/[0][4] 4-55
4.36 DCDC SCHEMATIC DIAGRAM [0][2] 4-56
4.37 DCDC, ROM, CONN. CIRCUIT BOARD 4-57
4.38 IS &TG BLOCK DIAGRAM (G channel) 4-58
4.39 CAM1 BOARD BLOCK DIAGRAM 4-59
4.40 CAM2 BOARD BLOCK DIAGRAM 4-60
4.41 IF, SWF, SWRU BLOCK DAIGRAM 4-61
4.42 SYSCON BLOCK DIAGRAM 4-62
4.43 LCD BLOCK DIAGRAM 4-63
4.44 VIDEO BLOCK DIAGRAM 4-64
4.45 REG BLOCK DIAGRAM 4-64
4.46 AUDIO BLOCK DIAGRAM 4-65
4.47 DV BLOCK DIAGRAM 1/2 4-66
• DV BLOCK DIAGRAM 2/2 4-67
4.48 IC BLOCK DIAGRAM 4-68

SECTION 5 EXPLODED VIEW AND PARTS LIST

5.1 CAMERA HEAD ASSEMBLY [M][1] 5-3
5.2 CABINET ASSEMBLY [M][2] 5-4
5.3 RIGHT SIDE COVER ASSEMBLY [M][3] 5-7
5.4 CHASSIS ASSEMBLY [M][4] 5-8
5.5 VTR UNIT ASSEMBLY [M][5] 5-11
5.6 MECHANISM ASSEMBLY [M][6] 5-12

SECTION 6 ELECTRICAL PARTS LIST

6.1 PR & MDA BOARD ASSEMBLY PARTS LIST [0][1] 6-2
6.2 DCDC BOARD ASSEMBLY PARTS LIST [0][2] 6-3
6.3 ROM BOARD ASSEMBLY PARTS LIST [0][3] 6-4
6.4 CONN. BOARD ASSEMBLY PARTS LIST [0][4] 6-4
6.5 DV MAIN BOARD ASSEMBLY PARTS LIST [1][0] 6-5
6.6 ISB BOARD ASSEMBLY PARTS LIST [1][1] 6-11
6.7 ISG BOARD ASSEMBLY PARTS LIST [1][2] 6-11
6.8 ISR BOARD ASSEMBLY PARTS LISTT [1][3] 6-12
6.9 TG BOARD ASSEMBLY PARTS LISTT [1][4] 6-12
6.10 CAM1 BOARD ASSEMBLY PARTS LIST [1][5] 6-13
6.11 CAM2 BOARD ASSEMBLY PARTS LIST [1][6] 6-17
6.12 PS1 BOARD ASSEMBLY PARTS LIST [1][7] 6-21
6.13 PS2 BOARD ASSEMBLY PARTS LIST [1][8] 6-21
6.14 ROM BOARD ASSEMBLY PARTS LIST [1][9] 6-22
6.15 JOG BOARD ASSEMBLY PARTS LIST [2][0] 6-22
6.16 IF BOARD ASSEMBLY PARTS LIST [2][1] 6-23
6.17 SWRU BOARD ASSEMBLY PARTS LIST [2][2] 6-23
6.18 SWF BOARD ASSEMBLY PARTS LIST [2][3] 6-24
6.19 SWRM BOARD ASSEMBLY PARTS LIST [2][4] 6-24
6.20 SWRB BOARD ASSEMBLY PARTS LIST [2][5] 6-24
6.21 SWPW BOARD ASSEMBLY PARTS LIST [2][6] 6-24
6.22 MIC BOARD ASSEMBLY PARTS LIST [2][7] 6-25
6.23 BNC BOARD ASSEMBLY PARTS LIST [2][8] 6-25
6.24 VIDEO/SYSCON BOARD ASSEMBLY PARTS LIST [3][1] 6-25
6.25 AUDIO/LCD BOARD ASSEMBLY PARTS LIST [3][2] 6-28
6.26 REG BOARD ASSEMBLY PARTS LIST [3][3] 6-31
6.27 MOTHER BOARD ASSEMBLY PARTS LIST [3][4] 6-33
6.28 OPE BOARD ASSEMBLY PARTS LIST [3][5] 6-33
6.29 SEN1 BOARD ASSEMBLY PARTS LIST [3][6] 6-33
6.30 SENS2 BOARD ASSEMBLY PARTS LIST [3][7] 6-33
6.31 REMOTE BOARD ASSEMBLY PARTS LIST [3][8] 6-33
6.32 AU JUNK BOARD ASSEMBLY PARTS LIST [3][9] 6-34
6.33 XLR BOARD ASSEMBLY PARTS LIST [4][0] 6-35
6.34 PWR JUNC BOARD ASSEMBLY PARTS LIST [4][1] 6-35
6.35 CONNECT BOARD ASSEMBLY PARTS LIST [4][2] 6-35
6.36 EAR.J BOARD ASSEMBLY PARTS LIST [4][3] 6-35

SECTION 7 PACKING

7.1 PACKING ASSEMBLY [M][7] 7-1
7.2 FACTORY SETTING OF SWITCH AND VR 7-2

SECTION 8 DESCRIPTION OF NEW CIRCUITRY

8.1 OUTLINE OF DV 8-1
8.2 MAJOR SIGNAL PROCESSING OPERATIONS OF DV 8-6
8.3 VIDEO/AUDIO SIGNAL PROCESSING IN RECORDING CIRCUITRY 8-7
8.4 VIDEO/AUDIO SIGNAL PROCESSING IN PLAYBACK CIRCUITRY .. 8-18
8.5 CAPSTAN SERVO 8-20
8.6 DRUM SERVO 8-22

SECTION 9 CIRCUIT DESCRIPTION

9.1 CAMERA HEAD CIRCUITRY 9-1
9.2 DVC CIRCUIT 9-4
9.3 MECHANISM OPERATION DESCRIPTION 9-20
9.4 EXPLANATION OF NEW FUNCTIONS 9-26

Important Safety Precautions

Prior to shipment from the factory, JVC products are strictly inspected to conform with the recognized product safety and electrical codes of the countries in which they are to be sold. However, in order to maintain such compliance, it is equally important to implement the following precautions when a set is being serviced.

●Precautions during Servicing

1. Locations requiring special caution are denoted by labels and inscriptions on the cabinet, chassis and certain parts of the product. When performing service, be sure to read and comply with these and other cautionary notices appearing in the operation and service manuals.

2. Parts identified by the ⚠ symbol and shaded (▒▒) parts are critical for safety.
   Replace only with specified part numbers.
   Note: Parts in this category also include those specified to comply with X-ray emission standards for products using cathode ray tubes and those specified for compliance with various regulations regarding spurious radiation emission.

3. Fuse replacement caution notice.
   Caution for continued protection against fire hazard.
   Replace only with same type and rated fuse(s) as specified.

4. Use specified internal wiring. Note especially:
   1) Wires covered with PVC tubing
   2) Double insulated wires
   3) High voltage leads

5. Use specified insulating materials for hazardous live parts. Note especially:
   1) Insulation Tape 3) Spacers 5) Barrier
   2) PVC tubing 4) Insulation sheets for transistors

6. When replacing AC primary side components (transformers, power cords, noise blocking capacitors, etc.) wrap ends of wires securely about the terminals before soldering.

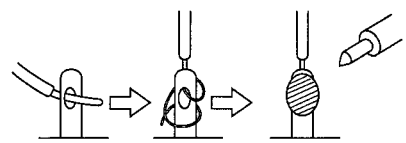

Fig.1

7. Observe that wires do not contact heat producing parts (heatsinks, oxide metal film resistors, fusible resistors, etc.)

8. Check that replaced wires do not contact sharp edged or pointed parts.

9. When a power cord has been replaced, check that 10-15 kg of force in any direction will not loosen it.

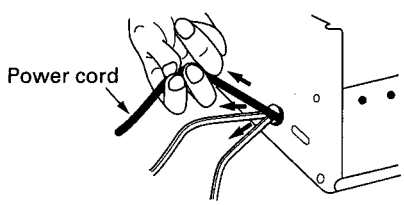

Fig.2

10. Also check areas surrounding repaired locations.

11. Products using cathode ray tubes (CRTs)
    In regard to such products, the cathode ray tubes themselves, the high voltage circuits, and related circuits are specified for compliance with recognized codes pertaining to X-ray emission. Consequently, when servicing these products, replace the cathode ray tubes and other parts with only the specified parts. Under no circumstances attempt to modify these circuits. Unauthorized modification can increase the high voltage value and cause X-ray emission from the cathode ray tube.

12. Crimp type wire connector
    In such cases as when replacing the power transformer in sets where the connections between the power cord and power transformer primary lead wires are performed using crimp type connectors, if replacing the connectors is unavoidable, in order to prevent safety hazards, perform carefully and precisely according to the following steps.

    1) **Connector part number** : E03830-001
    2) **Required tool** : Connector crimping tool of the proper type which will not damage insulated parts.
    3) **Replacement procedure**
       (1) Remove the old connector by cutting the wires at a point close to the connector.
       Important : Do not reuse a connector (discard it).

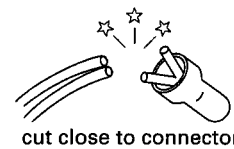

Fig.3

(2) Strip about 15 mm of the insulation from the ends of the wires. If the wires are stranded, twist the strands to avoid frayed conductors.

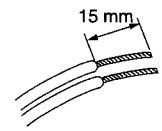

Fig.4

(3) Align the lengths of the wires to be connected. Insert the wires fully into the connector.

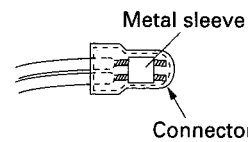

Fig.5

(4) As shown in Fig.6, use the crimping tool to crimp the metal sleeve at the center position. Be sure to crimp fully to the complete closure of the tool.

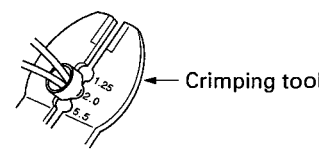

Fig.6

(5) Check the four points noted in Fig.7.

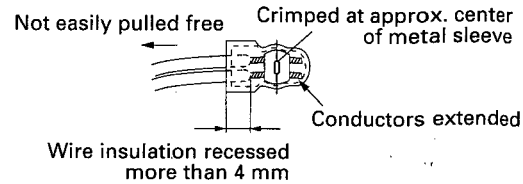

Fig.7

● Safety Check after Servicing

Examine the area surrounding the repaired location for damage or deterioration. Observe that screws, parts and wires have been returned to original positions, Afterwards, perform the following tests and confirm the specified values in order to verify compliance with safety standards.

1. **Insulation resistance test**
   Confirm the specified insulation resistance or greater between power cord plug prongs and externally exposed parts of the set (RF terminals, antenna terminals, video and audio input and output terminals, microphone jacks, earphone jacks, etc.). See table 1 below.

2. **Dielectric strength test**
   Confirm specified dielectric strength or greater between power cord plug prongs and exposed accessible parts of the set (RF terminals, antenna terminals, video and audio input and output terminals, microphone jacks, earphone jacks, etc.). See table 1 below.

3. **Clearance distance**
   When replacing primary circuit components, confirm specified clearance distance (d), (d') between soldered terminals, and between terminals and surrounding metallic parts. See table 1 below.

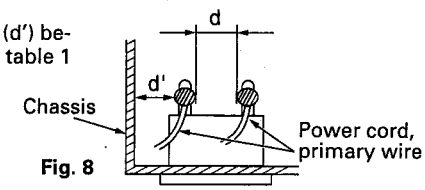

Fig. 8

4. **Leakage current test**
   Confirm specified or lower leakage current between earth ground/power cord plug prongs and externally exposed accessible parts (RF terminals, antenna terminals, video and audio input and output terminals, microphone jacks, earphone jacks, etc.).
   Measuring Method : (Power ON)
   Insert load Z between earth ground/power cord plug prongs and externally exposed accessible parts. Use an AC voltmeter to measure across both terminals of load Z. See figure 9 and following table 2.

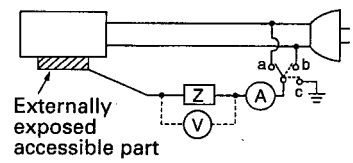

Fig. 9

5. **Grounding (Class I model only)**
   Confirm specified or lower grounding impedance between earth pin in AC inlet and externally exposed accessible parts (Video in, Video out, Audio in, Audio out or Fixing screw etc.).
   Measuring Method:
   Connect milli ohm meter between earth pin in AC inlet and exposed accessible parts. See figure 10 and grounding specifications.

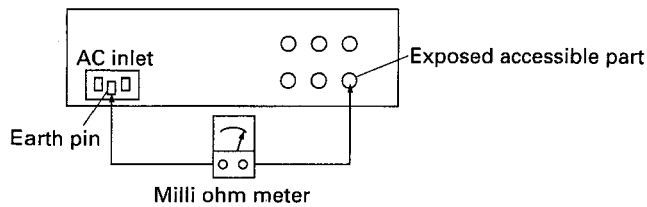

Fig. 10

Grounding Specifications

Region	Grounding Impedance (Z)
USA & Canada	Z ≦ 0.1 ohm
Europe & Australia	Z ≦ 0.5 ohm

AC Line Voltage	Region	Insulation Resistance (R)	Dielectric Strength	Clearance Distance (d), (d')
100 V	Japan	R ≧ 1 MΩ/500 V DC	AC 1 kV 1 minute	d, d' ≧ 3 mm
100 to 240 V			AC 1.5 kV 1 miute	d, d' ≧ 4 mm
110 to 130 V	USA & Canada	–	AC 900 V 1 minute	d, d' ≧ 3.2 mm
110 to 130 V 200 to 240 V	Europe & Australia	R ≧ 10 MΩ/500 V DC	AC 3 kV 1 minute (Class II) AC 1.5 kV 1 minute (Class I)	d ≧ 4 mm d' ≧ 8 mm (Power cord) d' ≧ 6 mm (Primary wire)

Table 1 Specifications for each region

AC Line Voltage	Region	Load Z	Leakage Current (i)	a, b, c
100 V	Japan	1 kΩ	i ≦ 1 mA rms	Exposed accessible parts
110 to 130 V	USA & Canada	0.15 μF, 1.5 kΩ	i ≦ 0.5 mA rms	Exposed accessible parts
110 to 130 V 220 to 240 V	Europe & Australia	2 kΩ	i ≦ 0.7 mA peak i ≦ 2 mA dc	Antenna earth terminals
		50 kΩ	i ≦ 0.7 mA peak i ≦ 2 mA dc	Other terminals

Table 2 Leakage current specifications for each region

Note: These tables are unofficial and for reference only. Be sure to confirm the precise values for your particular country and locality.

PrecautionsForUseoftheDVConnector

■ Be sure to follow the procedure outlined below when connecting.

1. **Turn ON the GY-DV500 and the equipment to be connected.**
2. **Set the VCR Setup Menu item No. 126 INPUT SELECT.**
3. **Insert the videocassette.**
4. **Connect the DV cable.**

(If the procedure is performed in incorrect order, noise may appear in the recording and playback picture and the sound may fail out. If this occurs, disconnect the DV cable and then connect it again following steps *1* to *4* of the aboveprocedure.)

■ When recording the GY-DV500 playback picture using another component with DV connector, such as a non-linear editing controller, be sure to set the VCR Setup Menu item No. 126 INPUT SELECT to **IEEE1394**.
(If the INPUT SELECT item is set to CAMERA, be sure to perform steps *1* to *4* of the above procedure.)

■ When making a backup recording on another component via the DV connector while recording with the GY-DV500, be sure to set the VCR Setup Menu item No. 126 INPUT SELECT to **CAMERA**.
(If the INPUT SELECT item is set to IEEE1394, be sure to perform steps *1* to *4* of the above procedure.)

SC96935-001

Precautions for Use of Head Cleaning Tape

Adhere to the following precautions when using the head cleaning tape.

1. The tape runs for 10 seconds at a time in the PLAY mode. (The tape stops automatically and then the unit enters the SAVE MODE. However, the display back light is not turned off.) Press the PLAY button after the cleaning tape is fully loaded.
2. Do not use the tape more than four times at the most for each cleaning.
3. The cleaning tape can be used four times.
   One time: One tape transport from the start of the rewound tape to the end of the tape.

■ Use the following chart as a guide for periodical head cleaning.

Operating environment	Low temperature 0°C to 10°C	Room temperature 10°C to 35°C	High temperature 35°C to 40°C
Yardstick for use of cleaning tape	1 to 2 times every 5 hours	1 to 2 times every 20 to 30 hours	1 to 2 times every 5 hours

Note 1) When used in a low humidity environment (10% RH to 30% RH), head cleaning should be conducted at intervals half of those given in the above chart.

Note 2) When an ME80 tape is used immediately after head cleaning, the VTR warning (head) indicator may remain on. In this case, let the tape run as the indicator will turn off after the tape has run for a while.

Note 3) Use the cleaning tape in the room temperature (10°C to 35°C).

SC96934-001

Precautions when writing S.S.F. data

When S.S.F. data stored in the memory of the GY-DV500 is written to the beginning of the rewound tape, approximately 5 seconds of recorded video and/or sound will be erased at the beginning.
In the case of important recordings, leave 5 seconds or more of the tape unrecorded *before starting recording.*

JVC®

DV CAMCORDER

GY-DV500 INSTRUCTIONS

Mini DV

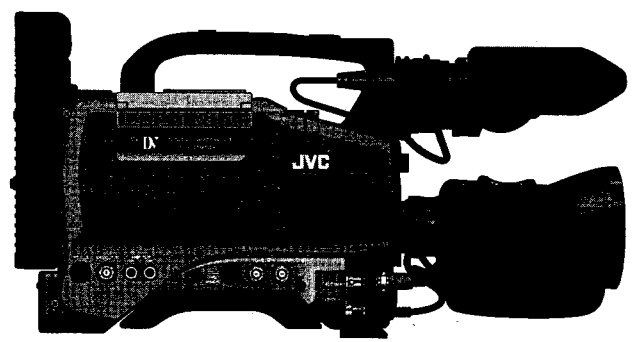

* The illustration shows the GY-DV500 DV Camcorder with the optional lens viewfinder attached.

Thank you for purchasing this JVC product. Before operating this unit, please read the instructions carefully to ensure the best possible performance.

For Customer Use :
Enter below the Serial No. which is located on the body.
Retain this information for future reference.

Model No. GY-DV500

Serial No.

This instructions attached to service manual is different from that which is provided the GY-DV500.

This instruction manual is made from 100% recycled paper.

SC96874 : U-ver.
SC96875 : E-ver.

INTRODUCTION
CONTROLS, INDICATORS AND CONNECTORS
BASIC SYSTEM CONNECTIONS AND ADJUSTMENTS
POWER SUPPLY
PREPARATIONS
SETTING AND ADJUSTMENTS BEFORE SHOOTING
SHOOTING OPERATION
PLAYBACK MODE
TIME CODE OPERATION
S.S.F. (Super Slow Frame)
USING EXTERNAL COMPONENTS
SETUP MENU
FEATURES OF THE CAMERA SECTION
OTHERS

IMPORTANT SAFEGUARDS U-ver. only

1. Read all of these instructions.
2. Save these instructions for later use.
3. All warnings on the product and in the operating instructions should be adhered to.
4. Unplug this appliance system from the wall outlet before cleaning. Do not use liquid cleaners or aerosol cleaners. Use a damp cloth for cleaning.
5. Do not use attachments not recommended by the appliance manufacturer as they may cause hazards.
6. Do not use this appliance near water – for example, near a bathtub, washbowl, kitchen sink, or laundry tub, in a wet basement, or near a swimming pool, etc.
7. Do not place this appliance on an unstable cart, stand, or table. The appliance may fall, causing serious injury to a child or adult, and serious damage to the appliance.
   Use only with a cart or stand recommended by the manufacturer, or sold with the appliance. Wall or shelf mounting should follow the manufacturer's instructions, and should use a mounting kit approved by the manufacturer.
   An appliance and cart combination should be moved with care. Quick stops, excessive force, and uneven surfaces may cause the appliance and cart combination to overturn.

   PORTABLE CART WARNING
   (symbol provided by RETAC)

   S3126A
8. Slots and openings in the cabinet and the back or bottom are provided for ventilation, and to insure reliable operation of the appliance and to protect it from overheating, these openings must not be blocked or covered. The openings should never be blocked by placing the appliance on a bed, sofa, rug, or other similar surface. This appliance should never be placed near or over a radiator or heat register. This appliance should not be placed in a built-in installation such as a bookcase unless proper ventilation is provided.
9. This appliance should be operated only from the type of power source indicated on the marking label. If you are not sure of the type of power supplied to your home, consult your dealer or local power company. For appliance designed to operate from battery power, refer to the operating instructions.
10. This appliance system is equipped with a 3-wire grounding type plug (a plug having a third (grounding) pin). This plug will only fit into a grounding-type power outlet. This is a safety feature. If you are unable to insert the plug into the outlet, contact your electrician to replace your obsolete outlet. Do not defeat the safety purpose of the grounding plug.
11. For added protection for this product during a lightning storm, or when it is left unattended and unused for long periods of time, unplug it from the wall outlet and disconnect the antenna or cable system. This will prevent damage to the product due to lightning and power-line surges.
12. Do not allow anything to rest on the power cord. Do not locate this appliance where the cord will be abused by persons walking on it.
13. Follow all warnings and instructions marked on the appliance.
14. Do not overload wall outlets and extension cords as this can result in fire or electric shock.
15. Never push objects of any kind into this appliance through cabinet slots as they may touch dangerous voltage points or short out parts that could result in a fire or electric shock. Never spill liquid of any kind on the appliance.
16. Do not attempt to service this appliance yourself as opening or removing covers may expose you to dangerous voltage or other hazards. Refer all servicing to qualified service personnel.
17. Unplug this appliance from the wall outlet and refer servicing to qualified service personnel under the following conditions:
    a. When the power cord or plug is damaged or frayed.
    b. If liquid has been spilled into the appliance.
    c. If the appliance has been exposed to rain or water.
    d. If the appliance does not operate normally by following the operating instructions. Adjust only those controls that are covered by the operating instructions as improper adjustment of other controls may result in damage and will often require extensive work by a qualified technician to restore the appliance to normal operation.
    e. If the appliance has been dropped or the cabinet has been damaged.
    f. When the appliance exhibits a distinct change in performance – this indicates a need for service.
18. When replacement parts are required, be sure the service technician has used replacement parts specified by the manufacturer that have the same characteristics as the original part. Unauthorized substitutions may result in fire, electric shock, or other hazards.
19. Upon completion of any service or repairs to this appliance, ask the service technician to perform routine safety checks to determine that the appliance is in safe operating condition.

SAFETY PRECAUTIONS

FOR USA AND CANADA

The lightning flash with arrowhead symbol, within an equilateral triangle is intended to alert the user to the presence of uninsulated "dangerous voltage" within the product's enclosure that may be of sufficient magnitude to constitute a risk of electric shock to persons.

The exclamation point within an equilateral triangle is intended to alert the user to the presence of important operating and maintenance (servicing) instructions in the literature accompanying the appliance.

INFORMATION FOR USA

INFORMATION

This equipment has been tested and found to comply with the limits for a Class B digital device, pursuant to Part 15 of the FCC Rules. These limits are designed to provide reasonable protection against harmful interference in a residential installation. This equipment generates, uses, and can radiate radio frequency energy and, if not installed and used in accordance with the instructions, may cause harmfull interfrence to radio communications. However, there is no guarantee that interference will not occur in a particular installation. If this equipment does cause harmful interference to radio or television reception, which can be determined by turning the equipment off and on, the user is encouraged to try to correct the interference by one or more of the following measures:

- Reorient or relocate the receiving antenna.
- Increase the separation between the equipment and receiver.
- Connect the equipment into an outlet on a circuit different from that to which the receiver is connected.
- Consult the dealer or an experienced radio/TV technician for help.

CAUTION

CHANGES OR MODIFICATIONS NOT APPROVED BY JVC COULD VOID USER'S AUTHORITY TO OPERATE THE EQUIPMENT.

THIS DEVICE COMPLIES WITH PART 15 OF THE FCC RULES. OPERATION IS SUBJECT TO THE FOLLOWING TWO CONDITIONS : (1) THIS DEVICE MAY NOT CAUSE HARMFUL INTERFERENCE, AND (2) THIS DEVICE MUST ACCEPT ANY INTERFERENCE RECEIVED, INCLUDING INTERFERENCE THAT MAY CAUSE UNDESIRED OPERATION

INFORMATION (FOR CANADA)
RENSEIGNEMENT (POUR CANADA)

This Class B digital apparatus complies with Canadian ICES-003.

Cet appareil numérique de la Class B est conforme à la norme NMB-003 du Canada.

WARNING:
TO REDUCE THE RISK OF FIRE OR ELECTRIC SHOCK, DO NOT EXPOSE THIS APPLIANCE TO RAIN OR MOISTURE.
This unit should be used with 12V DC only.
CAUTION:
To prevent electric shocks and fire hazards, do NOT use any other power source.

NOTE:
The rating plate (serial number plate) is on the top frame.

CAUTION
To prevent electric shock, do not open the cabinet. No user serviceable parts inside. Refer servicing to qualified service personnel.

AVERTISSEMENT :
POUR EVITER LES RISQUES D'INCENDIE OU D'ELECTROCUTION, NE PAS EXPOSER L'APPAREIL A L'HUMIDITE OU A LA PLUIE.
Ce magnétoscope ne doit être utilisé que sur du courant direct en 12V.
ATTENTION :
Afin d'eviter tout resque d'incendie ou d'électrocution, ne pas utiliser d'autres sources d'alimentation électrique.

REMARQUE :
La plaque d'identification (numéro de série) se trouve sur le panneau arrière de l'appareil.

WARNING ON LITHIUM BATTERY
The battery used in this device may present a fire or chemical burn hazard if mistreated. Do not recharge, disassemble, heat avobe 100°C (212°F) or incinerate.
Replace battery with Matsushita Electric CR2032, use of another battery may present a risk of fire or explosion.
- Dispose of used battery promptly.
- Keep away from children.
- Do not disassemble and do not dispose of in fire.

For Sweden

VARNING
Explosionsfara vid felaktigt batteribyte.
Använd samma batterityp eller en ekvivalent typ som rekommenderas av apparattillverkaren.
Kassera använt batteri enligt fabrikantens instruktion.

For Norway

ADVARSEL
Lithiumbatteri–Eksplosjonsfare.
Ved utskifting benyttes kun batteri som anbefalt av apparatfabrikanten.
Brukt batteri returneres apparatleverandøren.

For Denmark

ADVARSELI
Lithiumbatteri–Eksplosionsfare ved fejlagtig håndtering.
Udskiftning må kun ske med batteri af samme fabrikat og type.
Lever det brugte batteri tilbage til leverandøren.

For Finland

VAROITUS
Paristo voi räjähtää, jos se ön virheellisesti asennettu.
Vaihda paristo ainoastaan laitevalmistajan suoaittelemaan tyyppiin. Hävitä käytetty paristo valmistajan ohjeiden mukaisesti.

Thank you for purchasing the DV Camcorder GY-DV500.

Mini DV

This unit is a MiniDV video system format camcorder. Videocassettes which are not marked with the MiniDV symbol cannot be used with this unit.

The following phenomena may occur when tapes recorded on other units (including another GY-DV500) are recorded or played back on this camcorder.
- The transient section between scenes recorded on other units and those recorded on this unit may appear disturbed.
- Digital noise may appear during playback due to tracking errors.

- This unit records and plays back in the SP mode. Recording or playback in the LP mode is not possible.
- in the case of important recordings, do not record within the first 2 to 3 minutes from the beginning of the tape.
- Before recording important scenes, be sure to perform a test recording and confirm that both video and audio are recorded correctly.
- Recorded video and audio contents are for private use. Other use may infringe on the rights of copyright holders.
- JVC cannot assume liabilities that may derive from the impossibility of normal recording or playback of video or audio due to malfunction of the camcorder or the videocassette.

MAIN FEATURES

- Compact, lightweight design
  Employment of magnesium die cast has resulted in an operation-condition weight as low as approximately 5 kg including lens, viewfinder, battery, and cassette.
- DV high-quality digital format
  The 4:1:1 (U-ver.), 4:2:0 (E-ver.), 8-bit, 25 Mbps component digital processing of the format ensures recording and playback with high picture quality.
- High sound quality thanks to PCM audio
  Two types of sampling, 16-bit, 48 kHz sampling and 12-bit, 32 kHz sampling, ensure high-quality digital audio.
- Concentrated LCD display (back-lit)
  The concentrated LCD panel shows the time code and CTL counter, tape remaining time, remaining battery power, audio levels, VCR section setup menus, hour meter data, and a variety of warning indications. The display is back-lit to facilitate viewing in dark locations.
- Time code reader/generator
  The built-in time code reader/generator can be used to record SMPTE (U-ver.), EBU (E-ver.) time code and user's bits.
- AEF (Automatic Edit Function) enables neat switching between recorded scenes.
- Built-in monitor loudspeaker for audio checking
  The input audio can be monitored in recording or EE mode. The playback sound can be monitored in the playback mode. The loudspeaker also outputs an alarm tone in case an abnormal condition occurs in the unit.
- Rec check function for convenient recording review
- Camera section designed with 3-CCD system for high-quality picture
  Three 1/2" CCDs with 380,000 (U-ver.), 440,000 (E-ver.) effective pixels employed. Digital signal processing for reproduction of DV high-quality picture.
- Super sensitivity F/11, 2000 lux
  2000 lx standard sensitivity increased to F/11 while high S/N is retained. Enables shooting at normal indoor illumination eliminating the need for extra illumination.
- LOLUX for 0.75 lux (F1.4) illumination
  Employment of LOLUX mode ensures +33 dB gain. This is ideal for difficult shooting conditions with almost no illumination.
- Multi-Zone Auto Iris Detection Circuit
  Multi-zone auto iris detection circuit ensures optimum iris position even in backlit conditions or when a bright subject moves in a frame. Switch provided for selecting over or under level.
- Safety Zone indication in viewfinder
  Three types of safety zone indicator functions provided.
- Zebra pattern video level indication in viewfinder
- Full Auto Shooting (FAS) function
  Eliminating the need for troublesome switch or filter operations, the FAS function automatically provides a wide range of compatibility with shooting conditions which varies as you move between indoors and outdoors or between bright and dark locations.
- Color temperature conversion filters for "3200K", "5600K", "5600 K + ND" provided.
- Variable scan shutter for U-ver.
  Eliminates flicker when shooting other screen pictures than NTSC, such as computer monitor screens.
  Copes with the range from 60.1 Hz to 2084.6 Hz.
- Variable scan shutter for E-ver.
  Eliminates flicker when shooting other screen pictures than PAL, such as computer monitor screens.
  Copes with the range from 50.1 Hz to 2067.8 Hz.
- DV (i. LINK) connector
  DV connector (4-pin) provided. Enables transfer of digital data to other equipment provided with DV connector, such as a non-linear editing controller.
- S.S.F. (Super Scene Finder) function
  Enables memorization of the start point and ending point of each scene or memorization of CUE points.
- 1/2" bayonet type lens
- Camera output, VCR playback output (composite/YC) possible
- External sync input connector
- Built-in color bar (SMPTE type for U-ver., EBU type for E-ver.)
- Superior operability with shutter speed and menus selected by dial.

CONTENTS

INTRODUCTION

MAIN FEATURES 4

1. INTRODUCTION
1-1 Main Unit Configuration 6
1-2 Precautions for Proper Use 7
1-3 Routine and Periodical Maintenance 8
1-4 Videocassette to be Used 8
1-5 Battery Pack to be Used 9
1-6 Condensation 9
1-7 Characteristic CCD Phenomena 9

2. CONTROLS, INDICATORS AND CONNECTORS
2-1 Front Section 10
2-2 Right Side Section 12
2-3 Left Side Section 18
2-4 Top Section 19
2-5 Rear Section 20
2-6 Counter Display Contents 22
2-7 Lens (optional) 23
2-8 1.5-Inch Viewfinder (optional) 24
2-9 Indications in Viewfinder 25
• Warning LED Indicators Inside the Viewfinder 25
• Viewfinder Screen Display 25

PREPARATIONS

3. BASIC SYSTEM CONNECTIONS AND ADJUSTMENTS
3-1 Basic System 30
3-2 Attaching the Zoom Lens (optional) 31
3-3 Attaching the Viewfinder 31
3-4 Attaching the Microphone (provided) 32
3-5 Attaching the Microphone (optional) 32
3-6 Attaching the Tripod Base (provided) 33
3-7 Inserting and Replacing Backup Lithium Batteries .. 34

4. POWER SUPPLY
4-1 AC Operation 35
4-2 Battery Pack Operation 35
• Attaching a Flat Shape Type Battery Pack 36
• Using an Anton-Bauer Battery Pack 37
• Remaining Battery Power Display/Precautions for the Battery Pack 38

BASIC OPERATIONS

5. PREPARATIONS
5-1 Turning the Power ON 39
5-2 Cassette Loading and Unloading 40
5-3 Setting the Date and Time 41

6. SETTING AND ADJUSTMENTS BEFORE SHOOTING
6-1 Camera Settings 42
6-2 Viewfinder Adjustment 43
6-3 External Monitor Adjustment 43
6-4 Back Focus Adjustment 44
6-5 White Balance Adjustment 45
• White Balance Adjustment 45
• Full-Time Auto White Balance (FAW) 45
6-6 Switch Settings of the VCR Section 46
6-7 Audio Input Signal Selection 47
6-8 Recording Level Adjustment 48
6-9 Monitoring Audio during Recording 49

7. SHOOTING OPERATION
7-1 Basic Recording Operation 50
7-2 VCR Save Mode 52
7-3 If Unit is Left in Record-Pause (Standby) Mode 52
7-4 Checking Recorded Contents in Record-Pause Mode (Recording Check Function) 53

8. PLAYBACK MODE
8-1 Playback Procedure 54
8-2 Fast-Forward, Rewind 55
8-3 Search 55

APPLICATION

9. TIME CODE OPERATION
9-1 Displaying Time Code 56
9-2 Presetting and Recording of Time Code 56
• Time Code Presetting Procedure 57
• Presetting User's Bit Data 57
9-3 Recording Time Codes in Continuation of Time Codes Recorded on Tape 58
9-4 Reproducing Time Codes 59

10. S.S.F. (Super Scene Finder) FUNCTION
10-1 Explanation of the S.S.F. Function 60
10-2 How to Use the S.S.F. Function 61
10-3 Deleting S.S.F. Data 62
10-4 Resetting S.S.F. Data 62
10-5 Writing S.S.F. Data to Tape 63
10-6 Outputting S.S.F. Data 63

1. INTRODUCTION

11. USING EXTERNAL COMPONENTS

11-1 Connecting a Video Component with DV Connector 64
11-2 Connecting a PC 65

12. SETUP MENU

12-1 VCR Setup Menu 66
- VCR Setup Menu Configuration 66
- Displaying and Setting VCR Setup Menus 67
- VCR Setup Menu Contents 68

12-2 Camera Menu Screen Flow 70
12-3 How to Select from the Camera Menu 71
12-4 VF Display Screen 72
12-5 OPERATION Screen 73
12-6 PROCESS Screen 74
12-7 ADVANCED PROCESS Screen 75
12-8 SKIN COLOR ADJUST Screen 75
12-9 FILE MANAGE Screen 76
12-10 SETUP Screen 77
12-11 Resetting of Camera Menu Setting Values 78

13. FEATURES OF THE CAMERA SECTION

13-1 Full-Time Auto White Balance (FAW) 79
13-2 IRIS (Brightness) Adjustment 80
- Adjustment of Lens Iris 80
- Zebra Pattern Display during Manual Adjustment 80

13-3 Shooting the Screen Image on a Computer Monitor 81
13-4 Gain (Sensitivity) Adjustment 82
- Gain Switching 82
- Gain Boost under LOLUX Condition 82

13-5 Switch Setup According to Illumination and Subject 83
- Switch Functions 83
- Full Auto Shooting (FAS) Function 83

13-6 How to Use Skin Detail 84

OTHERS

14. OTHERS

14-1 Troubleshooting 86
- Alarm Indications 86
- Warnings in Viewfinder 88
- Troubles with Error Code Outputs 90
- Troubles without Error Code Outputs 91

14-2 Hour Meter Display 92
14-3 Specifications 93
- Optional Accessories 94
- External Dimensions 94

1-1 Main Unit Configuration

The GY-DV500 configuration is as shown below.

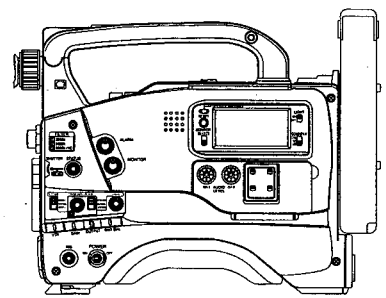

Camcorder (GY-DV500)

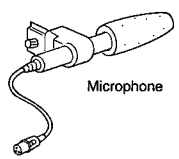

Microphone

Lithium battery

Head cleaning tape

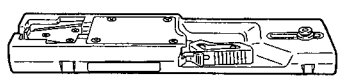

Tripod base

CAUTION :

- The front base mount may be locked while the pin of the tripod base is not inserted into the hole on the rear base mount of the unit. Therefore, after mounting, make sure that these parts are engaged properly.
- When moving the GY-DV500 mounted on a tripod, any impact or vibration should be avoided as this may cause the unit to become detached and to drop from the tripod. Be sure to remove the unit from the tripod before transporting it.

1-2 Precautions for Proper Use

- Supply voltage
  Make sure that the power is between 11 V and 15 V DC. If the power voltage is too low, abnormal color and increased noise may occur. Do not exceed 15 V DC in any case, or the unit could be damaged.
- Allowable ambient temperature and humidity
  Be sure to use the unit within the allowable temperature range of 0°C to 40°C and a relative humidity of 30% to 80%. Using the unit at a temperature or humidity outside the allowable ranges could result not only in malfunction but the impact on the CCD elements could be serious as small white spots may be generated. When storing the GY-DV500 for a long time, the storage temperatures should be -20°C to 60°C.
- Strong electromagnetic waves or magnetism
  Where there are strong electromagnetic waves or magnetism, for example near a radio or TV transmitter, transformer, motor, etc., the picture may contain noise and the colors may be incorrect.
- Use of wireless microphone near the camera
  When a wireless microphone or wireless microphone tuner is used near the camera during recording, the tuner could pick up noise.
- Avoid using or placing the unit in places;
  - subject to extreme heat or cold;
  - with excessive dirt or dust;
  - with high humidity or moisture;
  - subject to smoke or vapour such as near a cooking stove;
  - subject to strong vibrations or on an unstable surface.
  - also do not leave the unit for long hours in a parked car under direct sunlight or near room heating equipment.
- Protect the unit from being splashed with water (especially when shooting in the rain).
- Protect the unit from being wet when shooting on a beach. In addition, salt and sand may adhere to the camera body. Be sure to clean the camera after use.
- Protect the unit against penetration of dust when using it in a place subject to sandy dust.
- Optical performance of lens
  Due to the optical performance of the lens, color divergence phenomena (magnification chromatic aberration) may occur at the periphery of the image. This is not a camera malfunction.
- Noise may appear in the viewfinder when switching between the playback picture and the EE picture.
- Setup level (NTSC only)
  The video signal of the unit's video output is provided with a setup level when shipped from the factory. If you want to turn OFF the setup level, please consult the person in charge of professional video equipment at your nearest JVC-authorized service agent. The setup level is never attached to the video signal recorded on the tape.
- Use the unit in an upright position.
  If placed on its side, heat release efficiency will deteriorate, adversely affecting the tape transport. Depending on circumstances the tape may also be damaged.
- Vibrations
  Colors may fail to appear during VCR playback in locations subjected to vibrations.
- Precautions for transportation
  Do not drop or hit the unit against a hard object.
- Remove the videocassette before transporting the unit.
- Do not insert an object other than a videocassette in the cassette insertion slot. Be sure to close the cassette cover when the unit is not to be used for a long period
- Do not set the POWER switch to OFF or remove the power cable during recording or playback. Otherwise the tape may be damaged.
- When the unit is not in use, be sure to set the POWER switch to OFF in order to reduce power consumption.
- Cleaning the body: Wipe body with a dry, soft cloth. When it is extremely dirty, soak the cloth in a solution of neutral detergent, wring it out and then wipe. To prevent deformation of the body, etc. and to avoid operation hazards, do not allow volatile liquids such as benzine and thinner to touch the body, and do not wipe it with a cloth soaked in such a liquid.
- The camera may be unstable in the period immediately after the power is turned on, but this is not a malfunction.
- If a tape containing recorded PAL signals is played back, the GY-DV500 automatically enters the STOP mode. If this happens, remove the videocassette so that the unit returns to its normal state. (U-ver.)
- If a tape containing recorded NTSC signals is played back, the GY-DV500 automatically enters the STOP mode. If this happens, remove the videocassette so that the unit returns to its normal state. (E-ver.)

CAUTION :

- Do not point the lens or viewfinder directly at the sun or other strong light source.
  - Eye damage could result.
  - If the lens or viewfinder is left pointed at the sun, rays may collect inside the unit and cause damage or a fire.
- When carrying the camera, be sure to hold the carrying handle. Holding the lens or viewfinder may result in damage.

1-3 Routine and Periodical Maintenance

The GY-DV500 incorporates precision mechanical parts, which will collect dirt, wear out and deteriorate as the unit is used. On the other hand, when the unit has been used for a long period in a normal environment, the heads, drums and tape transport mechanisms also collect dirt deposited on them. Furthermore, dust which penetrates the inside of the VCR section especially during outdoor use will promote the wear and deterioration of mechanical parts by causing poor contact between tape and heads or failing to maintain the video and audio quality at high levels. To prevent wear and deterioration, clean the mechanical parts using a head cleaning tape as routine maintenance. However, cleaning with a head cleaning tape alone is not enough for cleaning the entire tape transport mechanism, it is also recommended to apply periodical maintenance (inspection) to prevent troubles that may be caused by the sudden occurrence of failure. As the replacement, adjustment and servicing of parts require advanced skill and equipment, please consult the person in charge of professional video equipment at your nearest JVC-authorized service agent.

Head Cleaning

- To maintain beautiful pictures and sound, be sure to use a head cleaning tape to clean the head periodically. (Read the separate sheet "Precautions for Use of Head Cleaning Tape".) If head cleaning is not performed periodically, a type of mosaic noise called block noise may appear in the picture or sound may be interrupted.

Block Noise

- Use the provided head cleaning tape. Do not use head cleaning tapes other than specified. For instructions on how to use the head cleaning tape and precautions for its use, read the separate sheet "Precautions for Use of Head Cleaning Tape".
- When dirt adheres to the heads of the GY-DV500, the following indications appear during playback and recording check using the RET button on the lens section.
  - "RF" appears on the display panel.
  - "HEAD CLOG" appears on the counter display.
  - "VTR WARNING (HEAD)" appears in the viewfinder.
- If this kind of indication appears, please stop the recording. Head cleaning is required. This indicator disappears when the POWER is turned OFF, or when the cleaning tape is played back.

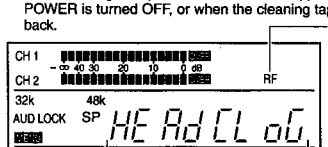

Periodical Maintenance

Contents : Check or replace the following mechanical parts according to the running time.

Running Time	500H	1000 H	1500H	2000H
Drum ass'y (including heads)	○	○	○	●
Head cleaner	☆	●	☆	●
Tape guides & rollers	○	☆	☆	●
Rotary encoder	–	☆	–	●
Belts & gears	☆	●	☆	●
Drive parts	○	○	☆	●

○: Clean, check and adjust.
☆: Clean and check. Replace as required.
●: Replace.

- The maintenance contents vary depending on the operating environment and method. Therefore, the above data should be considered as a reference.

Time management

The accumulated running time of the unit can be confirmed with the hour meter display (which shows the accumulated drum running time). For details, see "HOUR METER DISPLAY" on page 92.

For consultations related to the maintenance programming or cost, please contact the person in charge of professional video equipment at your nearest JVC-authorized service agent.

1-4 Videocassette to be Used

- Use JVC's videocassette tapes marked with MiniDV for this unit.
- Videocassettes cannot be used upside down.
- Avoid storing a videocassette with unevenly wound tape, as this may damage the tape. Rewind it to the beginning before placing a cassette into storage.
- Store videocassettes in a place with little humidity and good ventilation where mould does not form.
- **After a videocassette tape has been used repeatedly, it becomes unable to maintain full performance due to an increase in noise caused by dropouts, etc. Do not continue to use a dirty or damaged tape, as this will reduce the rotary head life.**
- Note that if an ME80 videocassette is used at low temperatures, block noise tends to occur due to head contamination.
- **Videocassette tapes marked MiniDV are provided with a switch on the back for use in preventing accidental erasure.**
- Slide the switch to SAVE to protect the required recording in the tape from being overwritten.
- To record on the tape, slide the switch to REC.

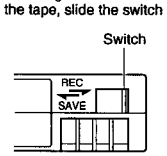

For servicing
See the service manual page 2-7 "2.4.3 Cleaning".
For the part No. of cleaning tape, see section "7.1 PACKING" on this service manual.

1-5 Battery Pack to be Used

The GY-DV500 can use any of the following battery packs.
- Flat shape type
- Anton-Bauer battery pack: Trimpack 13/14 Series
  Magnum 13/14 Series
  Compack 13/14 Series
  Propack 13/14 Series

To display the remaining battery power accurately, set the VCR Setup Menu item No. 396 BATTERY TYPE according to the type of the battery pack in use. (See page 69)

* An Anton-Bauer battery pack cannot be connected directly to the camera. It is necessary to mount the optional battery holder.
- Battery holder: Anton-Bauer QRQ27
  For details on how to mount the battery holder, see page 37.

1-6 Condensation

- If the unit has been cooled down in a cold place and is then carried to a warm place, the moisture contained in the warm air may adhere to the head drum or tape guides and be cooled into water droplets. This phenomenon is referred to as condensation (dewing). When this occurs, the head drum and tape guides are covered with droplets allowing the tape to be stuck to them, leading to tape damage.
- Condensation occurs in the following cases:
  - When the unit is suddenly moved from a cold place to a warm place.
  - When a room heater has just started or when the unit is exposed directly to cold air from an air conditioner.
  - When the unit is placed in a very humid place.

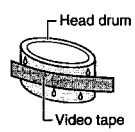

- When condensation occurs in this unit, the DEW indicator on the display lights up, and the WARNING LED blinks red. (See page 86)
  To remedy, leave the unit with the power ON and wait until the WARNING LED stops blinking red and the DEW indicator disappears from the counter display.

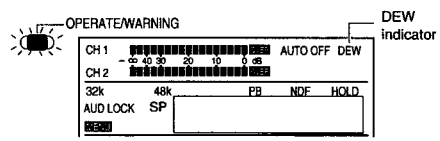

Do not leave the videocassette inserted when moving the camera under conditions where the temperature environment changes.

1-7 Characteristic CCD Phenomena

Smear and Blooming

Due to the physical structure of a CCD it is possible to induce vertical streaking (called "smear") when shooting an extremely bright light source. Another effect is the expansion of light around a bright light or object (called "blooming").
The CCD employed in this unit is characterized by inducing very little smear or blooming. Nevertheless, please be careful when shooting a bright light source.

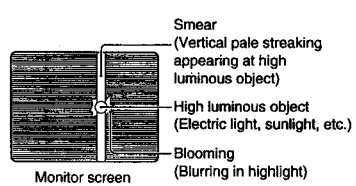

Moire or Aliasing

Shooting stripes or fine patterns may cause a jagged effect or a banding in fine mesh patterns.

White dots

High temperatures can cause CCD sensor pixels to malfunction with the effect of white dots in the image. This condition is conspicuous especially when gain is applied.
This is a characteristic of the charged-coupled device (CCD). As far as possible, use the unit under conditions where the temperature of the unit does not increase.

2. CONTROLS, INDICATORS AND CONNECTORS

2-1 Front Section

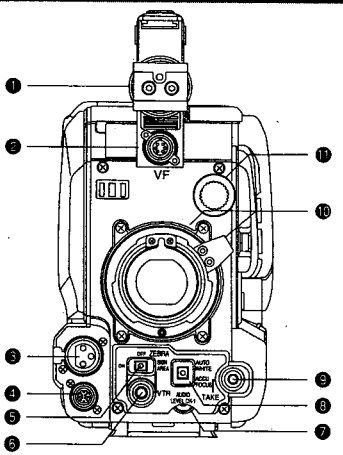

❶ Viewfinder mount base, sliding securing ring
Mount the viewfinder on the base and secure it using the sliding securing ring.
☞ See "Attaching the Viewfinder" on page 31.

❷ [VF] Viewfinder connector (6-pin)
Connect the cable from the viewfinder here.

❸ [MIC IN] Microphone input connector (XLR 3-pin)
Balanced 3-pin connector for camera microphone.
- When the camera microphone to be connected is a phantom microphone or other type of microphone, set the CAM MIC 48V item on the Camera Setup menu. See page 77.
- When using a microphone with this connector, set the AUDIO INPUT switches ❼ ❽ on page 14 to FRONT in accordance with the audio channel (CH1 or CH2) to be recorded.

☞ See page 14.

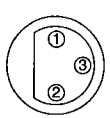

Pin No.	Function
1	GND
2	HOT
3	COLD

CAUTION:
- The provided microphone is a phantom microphone. Please confirm that the CAM MIC 48 V item on the Camera SETUP Menu is set to "ON".
- When using a microphone other than a phantom microphone, first set the CAM MIC 48 V item to "OFF" before connecting the microphone. Otherwise the microphone may be damaged.

❹ [LENS] Lens control connector
Connect 12-pin lens control cable from lens.

Pin No.	Function	Pin No.	Function
1	RET switch	7	IRIS position
2	VCR trigger	8	IRIS A/R INPUT
3	GND	9	EXTENDER position
4	Lens AUTO/MANU control	10	ZOOM position
5	IRIS control	11	—
6	+12V DC	12	—

❺ [ZEBRA] Switch
When this switch is ON, a zebra pattern is superimposed on the viewfinder areas having video levels with a luminance level of 70% to 80%. This pattern can be used as a reference for manual adjustment of the lens iris.
- The zebra patterns are only displayed on the viewfinder screen. The zebra patterns are not generated for the MONITOR OUT or Y/C OUT output.

☞ See "Zebra Pattern during Manual Adjustment" on page 80.

- The default value is 70% - 80%. The luminance level can be changed with the ZEBRA setting in the VF DISPLAY Menu screen.

☞ See "ZEBRA" item on page 72.

While this switch is pressed to the SKIN AREA side, the color tone areas specified with the SKIN DTL ADJUST item on the ADVANCED PROCESS MENU are indicated in the viewfinder. The switch returns to the OFF position when released.

☞ See "How to Use Skin Detail" on page 84.

- The Skin Detail color tone areas are not indicated while the VTR playback picture is shown in the viewfinder.

❻ [VTR] VTR trigger button (record start/stop button)
Record start/stop can be effected with this button.
(It is interlocked with the VTR trigger button on the lens section.)

❼ [AUDIO LEVEL CH-1] CH-1 recording level control
Adjusts the recording level of the CH1 audio signal input. Normally, the camera is used with the control set to the maximum (10) position.
- To use this control, set the VCR Setup Menu item No. 246 FRONT VOLUME ENABLE to "ENABLE".

Note:
Even when the VCR Setup Menu item No. 246 is set to DISABLE, the recording level changes slightly when this control is turned.

❽ [AUTOWHITE/ACCU FOCUS] switch
AUTO WHITE:
- First, position a white object to occupy 80% of the centre of the image.
- Setting this switch to the upper position ("AUTO WHT") will provide automatic adjustment for white balance.
- It is not activated in preset, full auto shooting, full-time auto white balance and color bar modes.

☞ See "White Balance Adjustment" on page 45.

2-1 Front Section (Cont'd)

ACCU-FOCUS:
- When this switch is set to "ACCU FOCUS" in the lower position, the lens iris will be forced to open for approximately ten seconds.
- The depth of field can be reduced and the lens focusing can be adjusted more accurately.

CAUTION:
- As the automatic shutter is activated here, flicker may appear on the screen depending on the lighting conditions (such as a fluorescent lamp, etc.)
- This operation is not possible in the LOLUX mode.

❾ [TAKE] button
The Super Scene Finder (S.S.F.) function retains the time code data for IN point and OUT point or CUE point in the unit's memory.

☞ See "S.S.F. Function on" page 60.

❿ Lens mounting ring/Lens lock lever
Hold the lens and use the lever to turn the ring anticlockwise to release lens.
To mount lens make sure the lens guide pin fits well, and then turn the ring clockwise until firm.

☞ See "Attaching the Zoom Lens" on page 31.

⓫ [FILTER] Color temperature conversion filter control knob
This knob changes the internal color temperature filter.

☞ See "Camera Settings" on page 42.

2-2 Right Side Section

[Camera Setting Section]

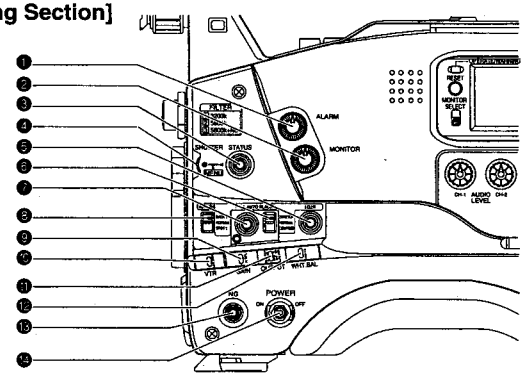

❶ [ALARM] Volume control
Turn to adjust the volume of the alarm tone that is output from the monitoring loudspeaker or earphone in case of a warning or other abnormal condition occurring with the GY-DV500.
Turn this control anticlockwise to reduce the volume. Setting this control to the minimum position mutes the alarm tone.

❷ [MONITOR] Audio monitor volume control
Adjusts the volume of the monitoring loudspeaker and earphone. The audio is muted when this control is set to the minimum position.

❸ [STATUS] Status/menu button
Pressing this button in the normal screen mode (condition when menu is not shown) displays a status screen in the viewfinder. The displayed status mode changes each time the button is pressed.
☞ See "Status Screens" on page 25.
Pressing this button for more than 1 second in the normal screen mode displays the Camera Menu screen in the viewfinder. Pressing this button while the menu screen is displayed in the viewfinder makes the menu screen disappear.
☞ See "How to Select from the Camera Menu" on page 71.

❹ [SHUTTER/MENU] dial
- Pressing this dial once in the normal screen mode (condition when menu is not shown) displays the shutter speed for approximately 5 seconds. When this dial is turned upwards while the shutter speed is displayed, the shutter speed becomes slower. When turned downwards, the shutter speed becomes faster. The selected shutter speed is memorised for each file. To return the memorised shutter speed to the factory preset, press the dial one more time while the shutter speed is displayed.
- When this dial is turned upwards or downwards while the menu screen is displayed, the cursor (>) also moves upwards or downwards to allow selection of items in the menu. To change the setting value of the item, press this dial. When the setting value starts blinking, turn this dial upwards or downwards to change the setting.

☞ See "How to Select Camera Menus" on page 71.

❺ [LOLUX] LOLUX On/Off button
This button toggles the LOLUX mode on and off.
- LOLUX gain gives extremely low light level sensitivity for special applications. This will result in an increase of 33 dB (approximately 45 times) in the LOLUX mode.
- LOLUX operation takes priority over normal gain setting.
- If the unit is placed in the LOLUX mode when it is in full auto shooting mode, the auto level control (ALC) (one of the full auto shooting functions) will be made inactive, so that the LOLUX mode is given preference (FAW still remains active).

☞ See "GAIN BOOST UNDER LOLUX CONDITION" on page 82.

❻ [BLACK] Black stretch/black compression switch
Switches the gain for the dark section of the image.
Set to an appropriate position depending on the video signal to be shot.
STRETCH : By stretching the signal only for the dark section, contrast in the dark portion of the image is enhanced.
NORMAL : Standard mode.
COMPRESS : When an entire image is relatively light and the contrast is low, the gain of the dark section is compressed to increase the contrast.

❼ [FULL AUTO] Full auto shooting ON/OFF button and indicator
- This switch toggles the full auto shooting function on and off.
- The indicator lights when in the full auto mode.
- Full auto shooting combines the auto iris, auto level control (ALC) to automatically adjust the video signal level and the white balance to their optimum levels.
- The iris is placed in automatic mode even if the iris mode switch of the lens is in manual.
- The gain will vary continuously to the maximum of +12 dB. The shutter speed will vary continuously to the minimum of 1/240 of a second.

☞ See "Full Auto Shooting (FAS) function" on page 83.

2-2 Right Side Section [Camera Setting Section]

❽ [AUTO IRIS] Auto iris level switch
This switch selects the automatic iris adjustment reference value according to the condition in which the camera is used.
BACK. L : Under back light (Opens the iris about 1 step from the standard level.)
NORMAL: Normal condition
SPOT. L : Under spotlight (Closes the iris about 1 step from the standard level.)

☞ See "SWITCH FUNCTIONS" on page 83.

❾ [GAIN] switch
Electronically boosts the light sensitivity when there is insufficient illumination on the subject. The boosting level differs depending on the switch position as follows: (Factory presets)
L : 0 dB (no boosting is applied)
M : 9 dB (boosted to approximately 3 times the original)
H : 18 dB (boosted to approximately 8 times the original)
- The boosting level for each switch position can be changed with the OPERATION menu screen. (☞ See page 73.)

The more the boosting level is increased, the more the resulting image will be noisy.

❿ [VTR SAVE/STBY] switch
Used to select the status of the GY-DV500 when the power is turned ON and a videocassette is loaded.
STBY: The GY-DV500 is in the standby mode.
When a recordable videocassette is loaded, the GY-DV500 enters the record-pause mode.
SAVE: The GY-DV500 is in the save mode.
- The status of the GY-DV500 is displayed on the Status screen 1 in the viewfinder.

⓫ [OUTPUT] Color bar/Camera/Auto knee switch
This switch is used to select the output signal. When the video signal from the shooting camera is selected, the auto knee function is available.
CAM. AUTO KNEE ON:
Outputs the video signal from the shooting camera. In this mode, the auto knee function is available.
CAM. AUTO KNEE OFF:
Outputs the video signal from the shooting camera. In this mode, the auto knee function is not available.
BARS: Outputs the color bar signal. In this mode, the auto knee function is not available. Set to this position when adjusting the video monitor or when recording the color bar signal.
AUTO KNEE function
When shooting a foreground subject, such as a human being, etc., with a high-brightness background, if the brightness level is set for the foreground subject, the background image will be blurred with white. In such a case, a clearer background is obtained when the auto knee function is used.
It is effective especially in the following cases:
- When shooting a human being indoors with a view to the landscape out through a window.
- When shooting a human being in the shade on a fine day.
- When shooting a high-contrast scene.

CAUTION:
If a fast moving high-brightness section like a car in sunlight is shot, the auto knee function may change the brightness of the entire image along with the motion of the object. In this case, set the auto knee function to OFF.

⓬ [WHT.BAL] White balance switch
Three white balance modes are selectable with this switch.
B : If white balance is performed with the switch in this position, it will be memorised into B.
A : If white balance is performed with the switch in this position, it will be memorised into A.
PRST (PRESET) : A non-erasable white balance setting at 3200K.
- FAW (Full-time Auto White) mode can be set to A, B or PRESET with the OPERATION MENU (see page 73).

In the FAW mode, video color temperatures are constantly sampled for automatic adjustment to a proper white balance.

⓭ [NG] button
Pressing this button while recording or in the record-pause mode deletes the S.S.F. data stored in the memory of the GY-DV500 with the S.S.F. (Super Scene Finder) function.
This function is only valid in the MARK mode.
☞ See "S.S.F. (Super Scene Finder) Function" on page 60.

⓮ [POWER] switch
Turn the power ON and OFF with this switch.
When this switch set to ON while a videocassette is loaded, the GY-DV500 status differs depending on the setting of the VTR (SAVE/STBY) switch ❿.

For servicing
Even during FAS operation, the priority setting for the audio recording level is "CH1/CH2 AUDIO SELECT".

2-2 Right Side Section (Cont'd)

[Audio Setting Section]

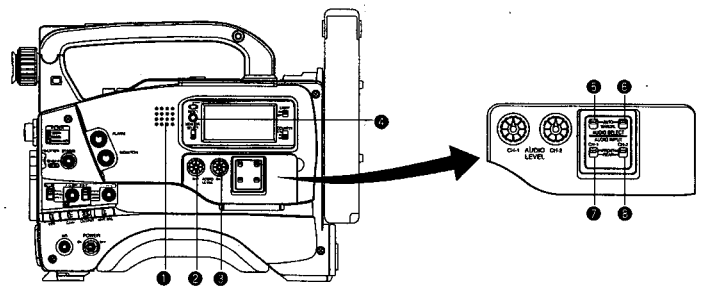

❶ Monitoring loudspeaker
- Enables EE monitoring of the input audio signal during recording, in the record-pause mode or in the stop mode. Outputs the playback sound in the playback mode. The sound to be output can be selected using the MONITOR SELECT switch ❹.
- The loudspeaker volume can be adjusted with the MONITOR volume control ❷ on page 12. The audio from the loudspeaker is not output when an earphone is plugged into the EARPHONE jack ❸ on page 20. The warning alarm tones are also output through this loudspeaker.

☞ See "ALARM INDICATIONS" on pages 86.

❷ [CH1 AUDIO LEVEL] CH1 recording level control
Adjust the recording level of the CH1 audio channel with this control.
- To use this control, set the CH1 AUDIO SELECT switch ❺ to "MANUAL". This control works regardless of the setting of the VCR Setup Menu item No. 246 FRONT VOLUME ENABLE. To use this control, set the AUDIO LEVEL CH-1 recording level control (❻ on page 10) on the front section to the maximum (10) position, or set the VCR Setup Menu item No. 246 FRONT VOLUME ENABLE to "DISABLE".

❸ [CH2 AUDIO LEVEL] CH2 recording level control
Adjust the recording level of the CH2 audio channel with this control.
- This control is valid only when the CH2 AUDIO SELECT switch ❻ is set to "MANUAL".

❹ [MONITOR SELECT] audio monitor selector switch
This switch is used to select the monitor sound output from the MONITORING LOUDSPEAKER ❶ or via the EARPHONE jack ❸ on page 20.
CH-1 : The CH1 channel audio is output.
MIX : CH1 and CH2 channel audio are output mixed.
CH-2 : The CH2 channel audio is output.

CAUTION:
Make sure to move switches all the way. Do not leave a switch stopped in a midway position. Noise will be generated and operation irregularities will occur.

❺ [CH-1 AUDIO SELECT] selector switch
This switch is used to select the method for adjusting the recording level of the CH-1 audio channel.
AUTO : The recording level is held at the reference level even when sounds greater than the reference level are input. The recording level does not increase when the input level is low.
MANUAL: The recording level can be adjusted with the CH-1 AUDIO LEVEL control ❷ or the CH-1 AUDIO LEVEL control ❼ on page 10. To use the AUDIO LEVEL CH-1 recording level control on the front section, set the VCR Setup Menu item No. 246 FRONT VOLUME ENABLE to "ENABLE".

❻ [CH-2 AUDIO SELECT] selector switch
This switch is used to select the method for adjusting the recording level of the CH-2 audio channel.
AUTO : The recording level is held at the reference level even when sounds greater than the reference level are input. The recording level does not increase when the input level is low.
MANUAL: The recording level can be adjusted with the CH-2 AUDIO LEVEL control ❸.

❼ [CH-1 AUDIO INPUT] selector switch
This switch is used to select the input section of the CH1 audio channel.
FRONT : The sound from the MIC IN connector on the front side section is input.
REAR : The sound from the CH-1 AUDIO IN connector on the rear side section is input.

❽ [CH-2 AUDIO INPUT] selector switch
This switch is used to select the input section of the CH2 audio channel.
FRONT : The sound from the MIC IN connector on the front side section is input.
REAR : The sound from the CH-2 AUDIO IN connector on the rear side section is input.

For servicing
When replacing the Lithium Battery, see page 41 "Setting the Date and Time" and then set the date and time as described therein.

2-2 Right Side Section (Cont'd)

[VCR Setup Block]

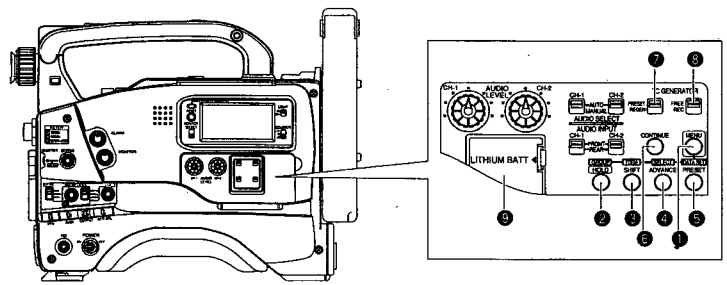

❶ [MENU] button
Press this button to enter the VCR setup menu mode. When the VCR setup menu mode is engaged, the "MENU" indicator in the LCD display lights and the counter display and viewfinder display are changed to the menu indication. In the VCR setup menu mode, pressing this button resumes the normal mode.

❷ [HOLD/GROUP] button
- Press this button when presetting the time code or user's bit. The presently displayed data is held (the "HOLD" indicator lights on the display) and the leftmost digit of the counter blinks. Pressing this button during presetting of time code or user's bit cancels the operation and recalls the previous display contents.
- In setup menu mode, this button is used to select the menu group.

❸ [SHIFT/ITEM] button
- During presetting of time code or user's bit, press this button to select the digit to be set. Each press of the button shifts the digit to be set (which blinks) to the right.
- In setup menu mode, this button is used to select the menu item.

❹ [ADVANCE/SELECT] button
- During presetting of time code or user's bit, press to select the value of the digit to be set. Each press of the button increases the number by 1.
- In setup menu mode, this button is used to select the value of a menu item.

❺ [PRESET/DATA SET] button
- During presetting of time code or user's bit, press to save the set value in the preset memory. The set time code or user's bit will be preset in the time code generator.
- In setup menu mode, this button is used to confirm the menu item setting and save the data in the memory.

- For details of the presetting of time code or user's bit, see page 56.
- For details on the setup menus, see page 67.

❻ [CONTINUE] button
If this button is pressed simultaneously with the LOG button ❺ on page 19 during the stop mode, the tape winds to the last S.S.F. data OUT point.

☞ See "About the Scene End Cue Up Function" on page 63.

TIME CODE GENERATOR setting switches

❼ [PRESET/REGEN] switch
Toggles the time code generator mode between PRESET and REGEN.
PRESET: Preset mode. Set to this position when newly presetting and recording the time code.
REGEN : Regeneration mode, in which the unit reads existing time codes on the tape and records time codes in continuation of the existing ones. Set to this position when you want to add additional time codes to time codes already recorded on the tape.

❽ [REC/FREE] run switch
Selects the time code running mode while the time code generator is in preset mode. This switch is not effective in the REGEN mode.
REC : The time code runs only during recording. This position allows you to record continuous time codes when recording scenes one after another.
FREE : The time code runs permanently.
* If this position is used when recording scenes one after another, the time codes become discontinuous at the change points between scenes.

❾ Lithium Battery Installation Compartment
Install a lithium battery (CR2032) in this compartment. The battery is used for the backup of the time code. The GY-DV500 is delivered without the battery installed.
The provided lithium battery is for test use. It is recommended to install a new lithium battery. A new lithium battery can power the backup for about one year. See "Inserting and Replacing Backup Lithium Batteries" on page 34.

2-2 Right Side Section (Cont'd)

[VCR Display Section]

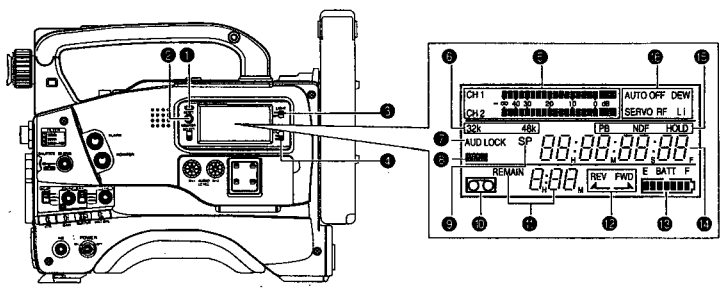

❶ [OPERATE/WARNING] indicator
Normally lights green.
Lights orange during the VTR SAVE (tape protect) mode.
This indicator lights or blinks in red in the case of a warning condition related to the remaining tape time, remaining battery power or other abnormal condition in the unit.
For details, see "ALARM INDICATIONS" on pages 86.

❷ [RESET] button
- Press to reset the CTL counter value.
- Pressing the button during presetting of time code or user's bit resets the time code or user's bit data to "00:00:00:00".

❸ [LIGHT] switch
Turns the illumination of the back-lit display ON or OFF.
ON : The display is illuminated.
OFF : The display is not illuminated.
(Keep this switch at OFF during battery operation of the GY-DV500 or when it is required to reduce the power consumption for some reason.)

Note:
When a videocassette is loaded and the VTR switch is set to SAVE mode, the illumination will go out even if the backlight is ON.

❹ [COUNTER] switch
Selects the contents displayed on the LCD counter display. The displayed contents when TC or UB is set can be selected using the VCR Setup Menu item No. 516 DISPLAY SELECT.
CTL : Set to this position to display the CTL counter.
TC : Set to this position to display time codes or for presetting the time code. (When the Menu item No. 516 DISPLAY SELECT is set to "TC".)
Time (Hour, Min., Sec.) is displayed. (When the Menu item No. 516 DISPLAY SELECT is set to "CLOCK".)
UB : Set to this position to display the user's bits of time codes or presetting the user's bit. (When the Menu item No. 516 DISPLAY SELECT is set to "TC".)
Date (Month, Day, Year) is displayed. (When the Menu item No. 516 DISPLAY SELECT is set to "CLOCK".)
☞ See "VCR Setup Menu Contents" on page 69.

❺ Audio level meters
Show the audio input level of the CH-1 and CH-2 channels in the record mode or EE mode.
In the playback mode, the meters show the playback audio level.
"OVER" lights in case of excessive input.

CAUTION:
Immediately after the power is switched ON, the level meters may fluctuate. This is not a malfunction.

❻ 32K/48K sampling frequency indication
Indicates whether audio recording or playback occurs with 12-bit, 32 kHz sampling or 16-bit 48 kHz sampling.
- In the recording mode, the sampling frequency is set using the VCR Setup Menu item No. 245 SAMPLING RATE.
In the playback mode, the indication conforms to the sampling rate of the recorded sound.

❼ [AUD LOCK] indicator
Indicates whether the audio signal is locked to the video signal during recording and playback.

❽ [MENU] indicator
Appears when the MENU button ❽ on page 15 is pressed to select the VCR Setup Menu.

❾ SP indicator
Indicates the tape speed in record mode.

❿ Cassette indicator
Lights when the unit is loaded with a videocassette. Blinks during ejection or tape loading.

⓫ [REMAIN] indicator
The remaining tape time (minutes and seconds) is shown.
For details, see page "Remaining Tape Time Display" on page 22.

2-2 Right Side Section (Cont'd)

⓬ Tape transport direction indicators
◢REV FWD◣ One of the indicators lights according to the tape transport direction.
◢— —◣ is displayed in the record-pause mode and in the still picture mode.

⓭ Remaining Battery Power Display
The 7-dot segment bar display shows the remaining battery power.
- To display the remaining battery power accurately, set the VCR Setup Menu item No. 396 BATTERY TYPE according to the type of the battery pack in use.

☞ See "Remaining Battery Power Display" on page 22.

⓮ Counter display
- Usually, this section shows the data of the CTL counter, time code or user's bit. The display mode can be selected with the ❺ COUNTER switch.
- Displays the VCR setup menu data when the GY-DV500 is in the VCR setup menu mode by pressing the MENU button ❽ on page 15. The VCR setup menu includes the hour meter (accumulated drum operating time).
- This section shows an error code when an abnormal condition occurs with the unit.

☞ See "Counter Display Contents" on page 22.
☞ See "TROUBLES WITH ERROR CODE OUTPUTS" on page 90.

⓯ Section for time code related indications
■ **[PB] Time code playback indicator**
Lights when the time code is in playback mode.
■ **[NDF] Non-drop frame indicator (U-ver. only)**
Lights when the internal time code generator or the playback time code framing mode is non-drop frame. "DF" is displayed in the drop-frame mode.
- It never lights when the CTL counter is displayed.

■ **[HOLD] indicator**
Lights when the time code generator display is held by pressing the HOLD button in the time code setting block. The time code or user's bit can be preset while this indicator is lit.

☞ See "Displaying Time Code" on page 56.

⓰ Warning indicators
■ **[AUTO OFF] Indicator**
Lights when a non-recoverable error (e.g. tape winding error, drum stopped, etc.) occurs with the unit. This indicator also lights if condensation occurs.

☞ See "TROUBLES WITH ERROR CODE OUTPUTS" on page 90.

■ **[DEW] indicator**
Lights when condensation (dewing) occurs on the drum or other mechanism in the unit.
The unit rejects all operations while this indicator is lit.
When the condensation has disappeared, the indicator turns off and the unit accepts operations again.
■ **[SERVO] indicator**
Lights in the case of trouble with the drum servo during recording to indicate that normal recording is not being accomplished.
■ **[RF] indicator**
Lights when the video head is clogged. Head clogging is detected during playback and recording check using the RET button on the lens section. Note that it is not detected during recording.

* Should this indicator light up, clean the head using the provided head cleaning tape. For instructions on head cleaning tape, read the separate sheet "Precautions for Use of Head Cleaning Tape".

■ **[Li] Lithium battery indicator**
Lights and indicates the necessity of replacement when the lithium battery that backs up data of the built-in time code generator is nearly exhausted.

☞ See "Insefting and Replacing Backup Lithium Batteries" on page 34.

For servicing
See the service manual page 2-7 "2.4.3 Cleaning".

For servicing
The protocol of VCR control is not included in this service manual.

2-3 Left Side Section

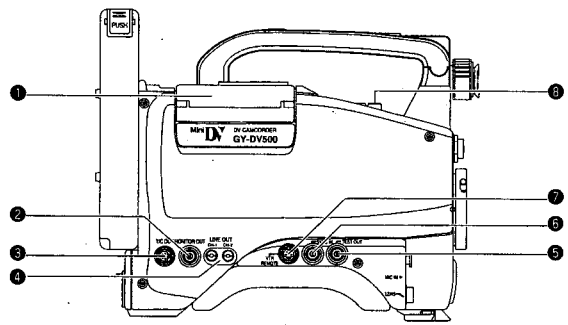

❶ Cassette cover

Pressing the EJECT switch on top of the section opens this cover so that a videocassette can be inserted or removed from the unit. The cover can be locked automatically by pushing and closing it.

* If the cassette cover is not closed, the GY-DV500 will remain inoperative.

Memo:
To prevent penetration of foreign objects into the unit, do not leave the unit with the cassette cover open.

❷ [MONITOR OUT] monitor output connector (BNC)

- Composite video signal output with setup (for U-ver.). Composite video signal output (E-ver.).
- An EE image or the playback image is output through the VCR section.
  An EE image is output during other modes than the playback mode.

* Data for the Camera and VCR setup menus or time code is not output.

❸ [Y/C OUT] connector (4P)

Separate YC video signal output connector.

❹ [LINE OUT CH-1/CH-2] connector (RCA)

Output connector for audio signals.

- Outputs the input audio signal in the record and stop modes.
- Outputs the playback audio signal in the playback mode.
- Alarm sound is not output.

❺ [TEST OUT] connector (BNC)

Composite video signal output connector.
Outputs the camera image.

❻ [SYNC.IN] connector (BNC)

For inputting the sync signal when the GY-DV500's camera image is synchronized with an external component.

Memo:

- The camera cannot be synchronized with a VCR playback signal.
- When the power is switched ON while an external sync signal is input, the screen moves in a vertical direction for a few seconds. This is not a malfunction.
- Only for the combined H (horizontal)/V (vertical) synchronizing signal. Synchronization with the SC (sub-carrier) of the input signal is not possible.
  Even if SC adjustment is performed, a phase shift will take place at the time of power on/off. The SC phase must be adjusted each time the power is turned on.
- Color frame synchronization is not possible.
- If the external sync signal is disrupted during recording, the "SYNC INH" (SYNC INHIBIT) indicator is displayed on the counter display and recording stops.
- If the external sync signal is disrupted during playback, playback of the disturbed video image continues. Start playback again after synchronization is obtained and the signal is stabilized.

❼ [VTR REMOTE] connector

A part of the unit's functions can be controlled externally. To remote control the unit using the control signal of this connector, the VCR Setup Menu item No. 050 REMOTE SELECT must be set to "RS232C".
For details, please consult your JVC dealer.

Note:

- When a cable is connected to the VTR REMOTE connector, the VTR Setup Menu is not displayed in the viewfinder. Make settings on the VTR Setup Menu while the cable is not connected.
- When a cable is connected to the VTR REMOTE connector, the VCR operation mode will not be displayed correctly on the Status 1 screen in the viewfinder.

❽ Microphone attachment holes

For attaching the microphone holder KA-A50 (optional).
☞ See "Attaching the Microphone (optional)" on page 32.

2-4 Top Section

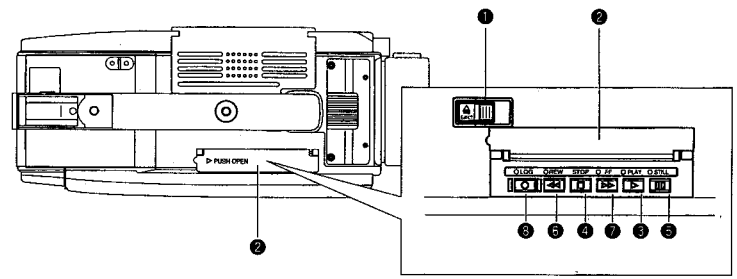

❶ [EJECT] switch

Slide to the side when inserting or ejecting the videocassette. Sliding this switch opens the cassette cover. If the switch is moved while the power is off, the cassette cover opens but it is not possible to insert or eject the cassette.

❷ Operation cover

Open this cover when operating in the playback mode. Otherwise, keep this cover closed.

❸ [PLAY] button

Press to start playback. In play mode, the unit outputs the video and audio signals of normal playback and the LED indicator above the PLAY button lights.

* If the auto tracking is active at the moment the play mode is entered, the playback video will be interfered with digital noise.

❹ [STOP] button

Press to enter stop mode. The drum keeps rotating in stop mode. However, when stop mode has continued for about 30 minutes, the unit enters the tape protect mode, in which the drum stops rotation and the tape tensioner is released. It takes more time than usual to enter the record or play mode from the tape protect mode.

* The time until the tape protect mode is initiated can be set to 3 or 30 minutes with the VCR Setup Menu item No. 307 LONG PAUSE TIME. When used in a cold environment, the setting will be 3 minutes regardless of the setting on the VCR Setup Menu.

☞ See page 69.

❺ [STILL] button

Press to enter the still picture mode during playback or in the search mode.
When the still picture mode has continued for about 30 minutes, the unit automatically switches to the stop mode. (Tape protect mode)

* The time until the tape protect mode is initiated can be set to 3 or 30 minutes with the VCR Setup Menu item No. 307 LONG PAUSE TIME.
  When used in a cold environment, the setting will be 3 minutes regardless of the setting on the VCR Setup Menu.

❻ [REW] button

Press to rewind the tape.

- Pressing the button in stop or fast forward mode initiates the rewind mode. The LED indicator above the REW button lights in this mode.
- Pressing the button during playback, still or forward search initiates reverse search at about 10 times the normal play speed. The LED indicators above the PLAY and REW buttons light during reverse search.

❼ [FF] button

Press to fast forward tape.

- Pressing the button in stop or rewind mode initiates fast forward mode. The LED indicator above the FF button lights in this mode.
- Pressing the button during playback, still or reverse search initiates forward search at about 10 times the normal play speed. The LED indicators above the PLAY and FF buttons light during forward search.

❽ [LOG] button

- When the REW button is pressed while this button is kept pressed, the S.S.F. data stored in the unit's memory are written to the tape. The LED indicator above the LOG button lights while S.S.F. data is being written to the tape.
- When the CONTINUE button (❽ on page 15) is pressed while this button is kept pressed in the stop mode, the tape winds to the S.S.F. data's last OUT point, after which the unit enters the record-pause mode. (Scene End Cue Up)
  The FF button's LED blinks during Scene End Cue Up.
  ☞ See "Writing S.S.F. Data to Tape" on page 63.

CAUTION:

- Only the EJECT switch and STOP button work during recording.
- If the cassette cover is open, all operations are rejected.

2-5 Rear Section

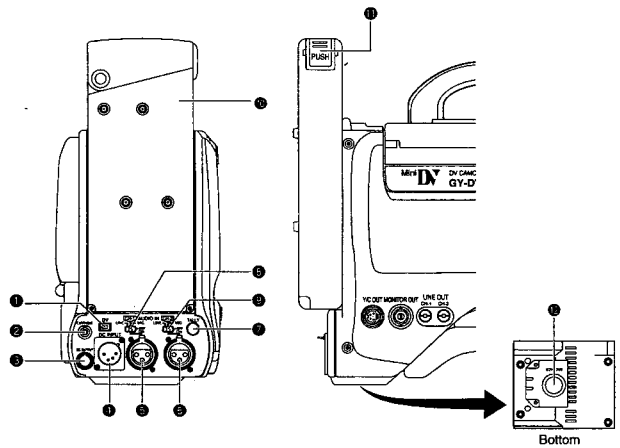

❶ [DV] connector

Using a DV cable (optional), a digital video component with DV connector can be connected here.
This connector is used for input and output of the DV signal or to input the VCR control signal from the digital video component with DV connector.

- To record the DV signal from this connector, set the VCR Setup Menu item No. 126 INPUT SELECT to "IEEE1394".
- To remote control the VCR with a VCR control signal from this connector, set the VCR Setup Menu item No. 050 REMOTE SELECT to "IEEE1394".

The setup level signal for the DV output connector is not provided. (NTSC only)

❷ [EAR.] earphone jack

This is a stereo mini-jack for connecting an audio monitoring earphone. Plug in an earphone or headphone with a 3.5 mm diameter plug. (Monaural mini jack)
The earphone can also be used to monitor alarm tones depending on situations.
The sound from the monitoring loudspeaker is interrupted when an earphone is connected here.

Memo:
Only the left-channel sound is heard when a stereo mini-jack is used.

❸ [DC OUTPUT] connector

Power output connector to a wireless microphone transmitter, etc. The supply voltage is identical to the voltage supplied to the unit (DC 12V max. 0.1 A).

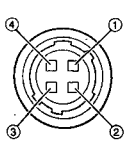

No.	Signal
①	GND
②	—
③	—
④	DC +12V (power through)

(Surface profile)

❹ [DC INPUT] connector (XLR 4-pin)

Power input connector for 12 V DC. Connect with the AA-P250 optional AC power adapter. When a cable is connected here, the power supply from the battery pack is interrupted and the source is switched to the power supplied through this connector.

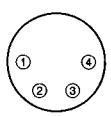

No.	Signal
①	GND
②	—
③	—
④	+12V

❺ [CH-1 AUDIO IN] CH-1 audio input connector (XLR 3-pin)

Connect the external audio equipment or microphone to this connector. Set the CH-1 AUDIO IN LINE/MIC select switch ❽ according to the connected equipment.
The audio signal input through this connector is recorded on the CH-1 audio channel. To record the audio of this connector, set the CH-1 AUDIO INPUT switch ❼ on page 14 to "REAR".

(AUDIO IN connector)

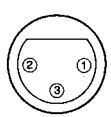

No.	Signal
①	GND
②	HOT
③	COLD

2-5 Rear Section (Cont'd)

❻ [CH-2 AUDIO IN] CH-2 audio input connector (XLR 3-pin)

Connect the external audio equipment or microphone to this connector. Set the CH-2 AUDIO IN LINE/MIC select switch ❾ according to the connected equipment.
The audio signal input through this connector is recorded on the CH-2 audio channel. To record the audio of this connector, set the CH-2 AUDIO INPUT switch ❾ on page 14 to "REAR".

❼ Back tally lamp

This lamp lights up when the GY-DV500 enters the record mode. It blinks during the transition to the record mode.

- Use the VCR Setup Menu item No. 082 BACK TALLY MODE to select whether or not the lamp should light and the lighting pattern.

☞ See "BACK TALLY MODE" on page 68.

❽ [CH-1 AUDIO IN LINE/MIC] CH-1 AUDIO select switch

Selects the audio signal input to the ❺ CH-1 AUDIO IN connector.

LINE : Set to this position when connected to audio equipment, etc. The reference input level is +4 dBs.
MIC : Set to this position when the microphone is connected. The reference input level is -60 dBs.
MIC +48V ON:
Set to this position when the microphone requiring +48 V power supply (phantom microphone, etc.) is connected.
This connector supplies +48 V DC current.

❾ [CH-2 AUDIO IN LINE/MIC] CH-2 AUDIO select switch

Selects the audio signal input to the CH-2 AUDIO IN connector ❻.

LINE : Set to this position when connected to audio equipment, etc. The reference input level is +4 dBs.
MIC : Set to this position when the microphone is connected. The reference input level is -60 dBs.
MIC +48V ON:
Set to this position when a microphone requiring +48 V power supply (phantom microphone, etc.) is connected. This connector supplies +48 V DC current.

CAUTION:
When connecting a component that does not require +48 V power supply, make sure that the switch is not set to this position before the connection is made.

❿ Battery holder

Mount a Flat Shape type battery pack here.

☞ See "Attaching a Flat Shape Type Battery Pack" on page 36.

⓫ Battery holder lock release knob

This knob is used to open the battery case cover. Press the knob to open the cover.

⓬ [BRAKER]

The braker trips when the power consumption exceeds the capacity.
If the braker trips, confirm that the power consumption does not exceed the wattage rating. Then press BRAKER before turning the power ON again to put the camera in the operating status.
If the unit still does not work normally, please consult the person in charge of professional video equipment at your nearest JVC-authorized service agent.

For servicing
See the service manual page 1-1 "RESETTING THE POWER CIRCUIT PROTECTION BREAKER".

2-6 Counter Display Contents

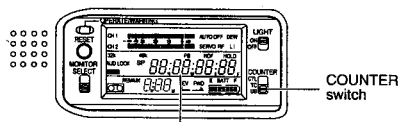

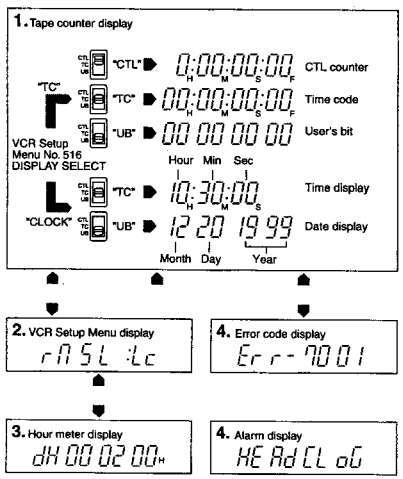

Remaining Tape Time Display

This display shows the remaining tape time (minutes/seconds) in record and play modes.

- Example: 30 minutes of remaining tape.

REMAIN 0:30 M

- This indicator blinks when remaining tape time is equivalent to less than 2 minutes.
- An alarm sounds as a warning when remaining tape time is equivalent to less than 2 minutes in the record mode

REMAIN 0:02 M

- The following display appears when no videocassette is loaded or during the calculation of remaining tape that takes place immediately after a videocassette is inserted.

REMAIN - : - - H M

The counter display shows the following 4 types of information.

1. Tape counter display
The counter display usually functions as a tape counter (hour, minute, second, frame). It can be switched to a CTL counter, time code or user's bit display by using the COUNTER switch. (When the VCR Setup Menu item No. 516 DISPLAY SELECT is set to "TC".)

- **CTL counter**: Time between -9 hr. 59 min. 59 sec. 29 frames and 9 hr. 59 min. 59 sec. 29 frames can be displayed. Running mode is fixed as non-drop frame.
  * CTL counter indication may also corrupt at playback of segment which time code signal is not continuously recorded.
- **Time code** : Time between 0 hour and 23 hr. 59 min. 59 sec. 29 frames can be displayed.
- **User's bit** : Hexadecimal number from 0 to F is displayed in 8 digits.

When the VCR Setup Menu item No. 516 DISPLAY SELECT is set to "CLOCK", the date and time are displayed. Set the COUNTER switch to TC or UB.
TC: Time (Hour, Min., Sec.) is displayed.
UB: Date (Month, Day, Year) is displayed.

- Press the MENU button to switch to the VCR Setup Menu setting display.

2. VCR Setup Menu setting display
This display is used when setting the setup menus. After setting of the setup menus, the tape counter display returns. For details, see "DISPLAYING AND SETTING VCR SETUP MENUS" on page 67.

3. Hour meter display
The hour meter is displayed by selecting the HM group from the VCR Setup Menu.
The hour meter data refers to the accumulated head drum running time.

4. Error code/Alarm display
The error code or alarm indicator is displayed automatically in case an abnormal condition occurs with the unit.
☞ See "TROUBLES WITH ERROR CODE OUTPUTS" on page 90.
☞ See "ALARM INDICATIONS" on page 86.

Remaining Battery Power Display

The 7-dot segment bar display shows the remaining battery power. The lighted segment bars decrease as the remaining battery power decreases.

- To display the remaining battery power accurately, set the VCR Setup Menu item No. 396 BATTERY TYPE according to the type of the battery pack in use.

All segment bars light when a fully charged battery pack is attached.

The last 2 segment bars and "BATT" start to blink when the battery is nearly exhausted. Replace with a fully charged battery pack.

When the battery capacity has run out, "E" and "BATT" blink and the unit stops operation automatically.

2-6 Counter Display Contents

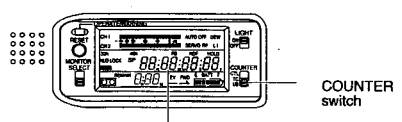

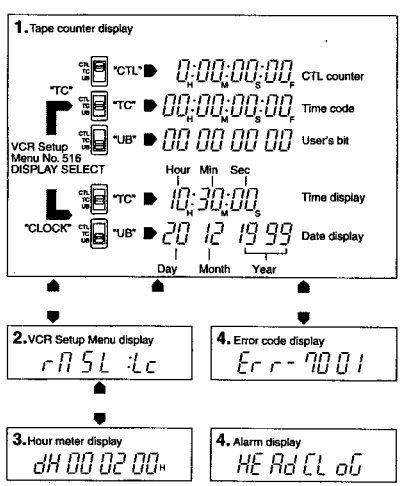

Remaining Tape Time Display

This display shows the remaining tape time (minutes/seconds) in record and play modes.

- Example: 30 minutes of remaining tape.

REMAIN 0:30 M

- This indicator blinks when remaining tape time is equivalent to less than 2 minutes.
- An alarm sounds as a warning when remaining tape time is equivalent to less than 2 minutes in the record mode

REMAIN 0:02 M

- The following display appears when no videocassette is loaded or during the calculation of remaining tape that takes place immediately after a videocassette is inserted.

REMAIN - : - - H M

The counter display shows the following 4 types of information.

1. Tape counter display
The counter display usually functions as a tape counter (hour, minute, second, frame). It can be switched to a CTL counter, time code or user's bit display by using the COUNTER switch. (When the VCR Setup Menu item No. 516 DISPLAY SELECT is set to "TC".)

- **CTL counter**: Time between -9 hr. 59 min. 59 sec. 24 frames and 9 hr. 59 min. 59 sec. 24 frames can be displayed.
  * CTL counter indication may also corrupt at playback of segment which time code signal is not continuously recorded.
- **Time code** : Time between 0 hour and 23 hr. 59 min. 59 sec. 24 frames can be displayed.
- **User's bit** : Hexadecimal number from 0 to F is displayed in 8 digits.

When the VCR Setup Menu item No. 516 DISPLAY SELECT is set to "CLOCK", the date and time are displayed. Set the COUNTER switch to TC or UB.
TC: Time (Hour, Min., Sec.) is displayed.
UB: Date (Day, Month, Year) is displayed.

- Press the MENU button to switch to the VCR Setup Menu setting display.

2. VCR Setup Menu setting display
This display is used when setting the setup menus. After setting of the setup menus, the tape counter display returns. For details, see "DISPLAYING AND SETTING VCR SETUP MENUS" on page 67.

3. Hour meter display
The hour meter is displayed by selecting the HM group from the VCR Setup Menu.
The hour meter data refers to the accumulated head drum running time.

4. Error code/Alarm display
The error code or alarm indicator is displayed automatically in case an abnormal condition occurs with the unit.
☞ See "TROUBLES WITH ERROR CODE OUTPUTS" on page 90.
☞ See "ALARM INDICATIONS" on page 86.

Remaining Battery Power Display

The 7-dot segment bar display shows the remaining battery power. The lighted segment bars decrease as the remaining battery power decreases.

- To display the remaining battery power accurately, set the VCR Setup Menu item No. 396 BATTERY TYPE according to the type of the battery pack in use.

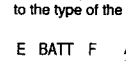

All segment bars light when a fully charged battery pack is attached.

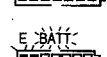

The last 2 segment bars and "BATT" start to blink when the battery is nearly exhausted. Replace with a fully charged battery pack.

When the battery capacity has run out, "E" and "BATT" blink and the unit stops operation automatically.

2-7 Lens (optional)

[S14 x 7.3B12]

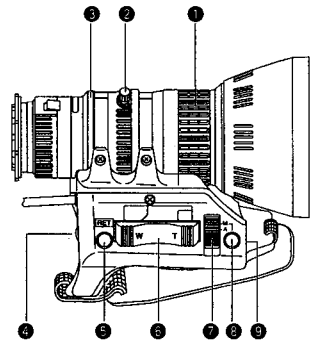

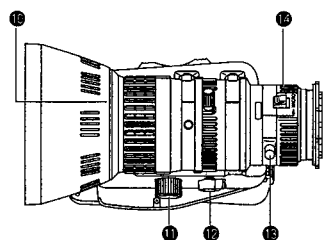

❶ **FOCUS ring**
Manual focus ring.

❷ **ZOOM lever/ring**
This is the manual zoom ring equipped with a zoom lever. To adjust the zoom manually, turn the zoom mode knob ⓬ to position "M".

❸ **IRIS ring**
Manual iris ring. To activate the auto iris feature, set the Iris Mode switch ❼ to A.

❹ **[VTR] Trigger button**
To start/stop shooting.

❺ **[RET] return video button**
The return video signal from the VCR section can be monitored in the viewfinder only while this button is pushed.
* The playback picture can be viewed in the viewfinder during this operation.

❻ **ZOOM servo control lever**
To operate the servo zoom feature with this lever, set the ZOOM knob ⓬ to S.
- Pressing the W section of this lever increases the angle of the lens for a wider shooting angle.
- Pressing the T section of this lever narrows the lens angle perspective for telephoto shots.
- Pushing harder changes the speed of the zoom.

❼ **IRIS mode switch**
A: Activates the auto iris feature.
M: Allows manual iris control.

❽ **Momentary auto iris button**
When the IRIS MODE switch ❼ is at "M", pushing this button activates the Auto Iris Function while it is held down only.

❾ **[S] IRIS speed adjusting control**
For adjusting the iris operation speed.

> **Memo:**
> If the speed becomes too fast, hunting may occur.
> • To avoid the phenomena described above, perform adjustment again.

❿ **FILTER thread**
Protect the lens with a clear filter or UV filter by screwing the filter onto the thread inside the lens hood from the front. Other filters can be used for various effects.

> **CAUTION:**
> The filter thread section rotates, so pay attention when mounting a polarizing filter.

⓫ **ZOOM servo connector**
Connect an optional zoom servo unit here.

⓬ **ZOOM mode knob**
S: Servo zoom mode. Allows operation by the zoom servo control lever ❻.
M: Manual zoom mode. Allows zoom control by the zoom lever/ring ❷.

⓭ **BACK FOCUS ring/fixing screw**
For back focus adjustment only. Secure with the screw knob after adjustment.
☞ See "Back Focus Adjustment" on page 44.

⓮ **Macro focusing ring (for close-up shooting)**
By rotating this ring in the direction of the arrow, close-up shooting of very small objects becomes possible.
Normal focus adjustment and zooming are not available in the macro mode.
To shoot images in the macro mode, set the focus ring ❶ to the infinite position and the zoom ring ❷ to the maximum wide-angle position. To adjust the focus of the macro image, rotate this ring in the direction of the arrow until the object is focused.

> **CAUTION:**
> • The back-focus knob is located close to the macro ring, be careful not to mistake the back-focus knob for the macro ring.
> • After the required operation, be sure to return the macro focusing ring to the normal position.

☞ See "Attaching the Zoom Lens (optional)" on page 31.
☞ See "Back Focus Adjustment" on page 44.

2-8 1.5-Inch Viewfinder (optional)

[VF-P115B]

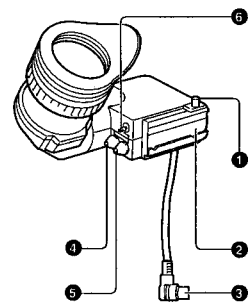

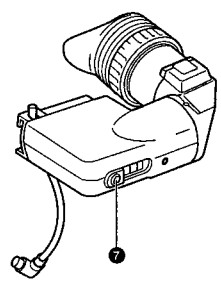

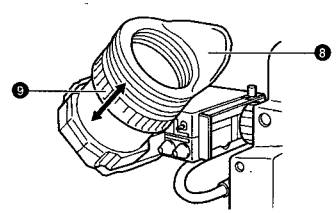

❶ **Stopper screw**
This screw prevents the viewfinder from coming off the camera.

❷ **Mounting guide**
To attach on the camera.

❸ **Connector**
Connect to the camera.

❹ **[CONT] contrast adjustment**
To adjust the contours of the viewfinder image.

❺ **[BRIGHT] brightness adjustment**
To adjust the brightness of the viewfinder.

❻ **[TALLY] switch**
Set this switch to OFF to prevent the tally light ❼ from turning on and informing people that they are being recorded. However, the REC indicator lamp in the eyepiece will not turn off.

❼ **Tally light**
Lights when recording is in progress. To prevent this light from coming on, set the tally switch ❻ to "OFF".

❽ **Eyepiece**
Ensures that ambient light does not reach the viewfinder screen or falls into the eye of the cameraman.
The eyepiece can be opened to allow direct observation of the viewfinder screen.

❾ **Eyepiece focusing ring**
Loosen this ring to move the eyepiece back or forth to adjust the diopter.

2-9 Indications in Viewfinder

■ WARNING LED INDICATORS INSIDE THE VIEWFINDER

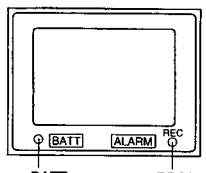

The viewfinder has two LED indicators below the screen. These LEDs light or blink to indicate the present status of the camera or the VCR.

- **[BATT] battery lamp**
  This lights red when the battery voltage becomes too low for operating the camera.
- **REC/ALARM lamp**
  This lights or blinks green under the following circumstances.
  Steady green : During recording.
  Blinks green : • While the GY-DV500 switches from record-pause to recording.
  • Immediately before the tape is running out or when it has run out.
  • When an error occurs in the GY-DV500.

■ VIEWFINDER SCREEN DISPLAY

The following indications are displayed on the viewfinder screen. (However, this information is not displayed while the VCR section is playing back a tape.)

- Status screens (screens for use in checking the current camera settings)
- Alarm message display
- Safety zone display
- Setting screen (screen for use in the camera and VCR setup)
- Auto white balance display
- Shutter speed display

■ Status Screens

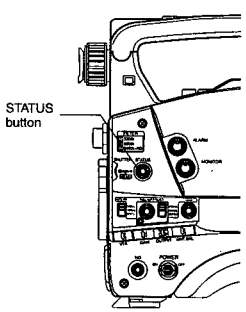

Press the STATUS button during normal screen display to show one of the status screens in the viewfinder. One of the three status screens will be displayed every time the button is pressed.

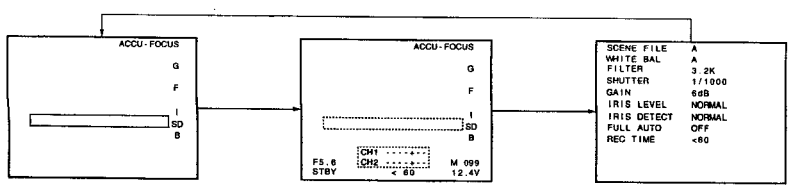

Status 0 Status 1 Status 2

2-9 Indications in Viewfinder (Cont'd)

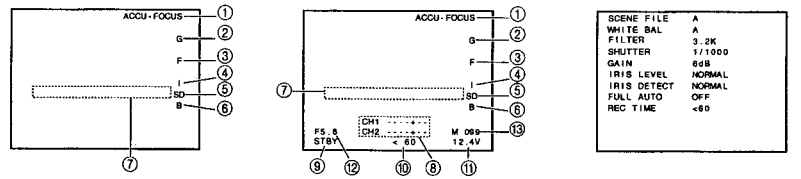

Status 0 Status 1 Status 2

- **Status 0**

Display Position	Display	Function
①	ACCU-FOCUS	Blinks during the ACCU-FOCUS operation.
	SKIN AREA	Blinks while the skin tone detail color area is displayed.
	S	Displayed when the SHUTTER or V-SCAN is ON.
	FAS	Displayed when the Full Auto Shooting is ON.
	ALC	Displayed when the ALC alone is ON.
②	G	Displayed in other modes than 0 dB, LOLUX and ALC.
	L	Displayed during LOLUX operation.
③	F	Displayed when FAW alone is ON.
④	I	Displayed when IRIS BACK LIGHT or IRIS SPOT LIGHT is selected.
⑤	SD	Displayed while the Skin Detail function is in operation.
⑥	B	Displayed when BLACK STRETCH or BLACK COMPRESSION is selected.
⑦	Event display	See the table below.

⑦ Event display

Event is displayed in the viewfinder for only about 2 seconds when any of the following switches is operated.

Switch	Event Display Contents	
ZEBRA	ZEBRA	ON, OFF
BLACK	BLACK	STRETCH, NORMAL, COMPRESS
GAIN	GAIN	–3 dB, 0 dB, 6 dB, 9 dB, 12 dB, 18 dB, ALC
WHT. BAL	WHITE BAL	A, B, PRESET, FAW
FULL AUTO	FULL AUTO	ON, OFF
AUTO IRIS	IRIS	BACK.L, NORMAL, SPOT.L
LOLUX	LOLUX	ON, OFF
FILTER knob	FILTER	3.2K, 5.6K, 5.6K+ND
VTR	VTR	STBY, SAVE
AUTO KNEE	AUTO KNEE	ON, OFF

2-9 Indications in Viewfinder (Cont'd)

• Status 1

In addition to the information on the Status 0 screen, this screen displays audio indicators and information on remaining tape, voltage and lens F-number.

Display position	Display	Function
⑧	(Example) CH1- - - - + - - CH2- - - - + - -	Shows the input level of the audio input channel. Display ON/OFF can be selected using the VF DISPLAY menu screen. ☞ See "AUDIO DISPLAY" on page 72.
⑨	STBY	VCR in standby mode
	SAVE	VCR in save mode
	STOP	VCR in stop mode
	REC	VCR in record mode
	FF	VCR in fast-forward mode
	REW	VCR in rewind mode
	EJECT	VCR in reverse search mode
⑩	(Example) < 60 (Example) 12: 34: 56: 20	Remaining tape indication (displayed in 1-minute steps) When the tape is used for a long time, the remaining tape may not be indicated accurately. At the beginning of the tape, in particular, the indication may show smaller value than the actual one. Time code display Time code display is available when the "REC TIME" item on the VF DISPLAY menu screen is set to TIME CODE. ☞ See "REC TIME" on page 72.
⑪	(Example) 12.4V	Voltage indication (displayed in 0.1 V steps)
⑫	OPEN, F2, F2.8, F4, F5.6, F8, F11, F16, CLOSE	Shows the F-number of the connected lens. It is not displayed when the lens is removed. For some lenses, no display appears. Display ON/OFF can be selected on the VF DISPLAY menu screen. ☞ See "F NO.DISPLAY" on page 72.
⑬	(Example) M:99	In the Super Scene Finder (S.S.F.) mode, the number of memorized scenes is shown. M: In MARK mode C : In CUE mode Number: Number of memorized scenes

Note:
When the RS-232C cable is connected, the VCR operation mode may not be displayed correctly.

• Status 2

This screen displays the camera setup statuses.
Event display is not available while this screen is displayed.

Indication	Indication Contents
SCENE FILE	A, B, OFF
WHITE BAL	A, B, PRESET, FAW
FILTER	3.2K, 5.6K, 5.6K+ND
SHUTTER	OFF, 1/100, 1/250, 1/500, 1/1000, 1/2000, 1/60.1 to 1/2084.6 (in VARIABLE mode), EEI (in ALC mode)
GAIN	-3dB, 0dB, 6dB, 9dB, 12dB, 18dB, LOLUX, ALC
IRIS LEVEL	NORMAL, BACK L, SPOT L
FULL AUTO	ON, OFF
REC TIME	Remaining tape time or time code.

2-9 Indications in Viewfinder (Cont'd)

■ Alarm Message Display

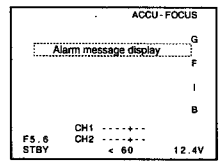

The following alarm messages are displayed on the status 0 and status 1 screens.

Indication	Contents
LOW BATTERY	The battery capacity is nearly exhausted.
CLOSE CASSETTE COVER	The cassette cover is not closed.
VTR WARNING [HEAD]	Head clogging
VTR WARNING [SERVO]	Servo error
VTR WARNING [DEW]	Condensation
VTR WARNING [HARD]	Hardware error
VTR WARNING [STOP]	Operation stopped
VTR WARNING [REW]	Rewinding abnormality
TAPE NEAR END	Remaining tape time is less than about 2 minutes in the record mode
TAPE END	Tape end reached
REC INHIBIT	An unrecordable videocassette (the switch on the back of the cassette is set to SAVE) is inserted.
NO TAPE	VTR trigger is pressed with no tape loaded.

2-9 Indications in Viewfinder (Cont'd)

■ Safety Zone

Three types of safety zone items can be displayed in the viewfinder. Select the required one with the SAFETY ZONE item on the VF DISPLAY menu screen.

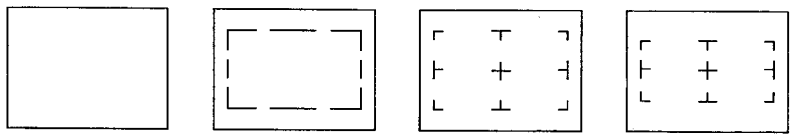

OFF ZONE 1 ZONE 2 ZONE 3

■ Setting the Screen Display

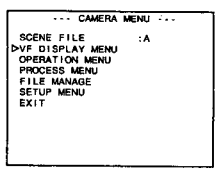

Screen used for making various settings of the camera and VCR.
☞ See "Camera Menu Screen Flow" on page 70.
☞ See "VCR Setup Menu" on page 66.

■ Auto White Balance Display

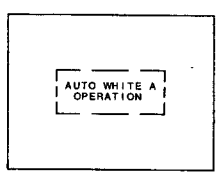

This screen appears during the auto white balance adjustment operation to display various data.
☞ See "White Balance Adjustment" on page 45.

■ Shutter Speed Display

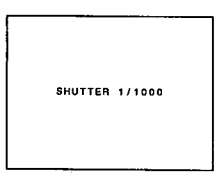

When the SHUTTER dial is pressed, a shutter speed is displayed (for approx. 5 sec.). In addition, whenever the shutter speed is altered by using the SHUTTER dial, the shutter speed is displayed. While this display is shown, other displays disappear.
☞ See "SHUTTER/MENU dial" on page 12.

For servicing
See the service manual page 1-16 "1.11.7 Tripod base".

3. BASIC SYSTEM CONNECTIONS AND ADJUSTMENTS

3-1 Basic System

For information on connection with the individual attachments, refer to the page explaining the respective connection methods.

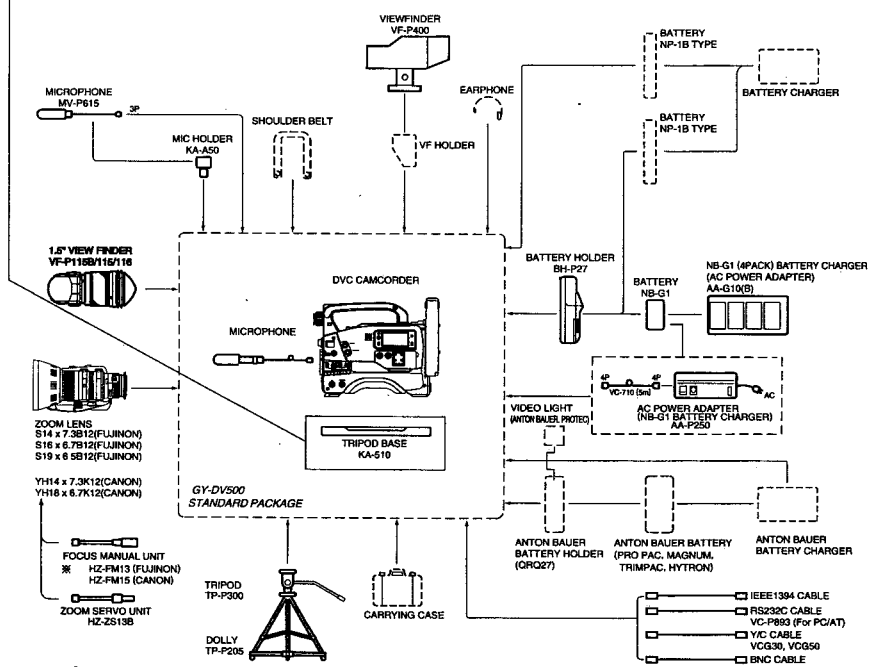

* HZ-FM13 cannot be used with S14X7.3B12/U.
Please use the Focus Manual Unit (FMM-8, CHF-3, CFC-12-990) manufactured by Fujinon.

3-2 Attaching the Zoom Lens (optional)

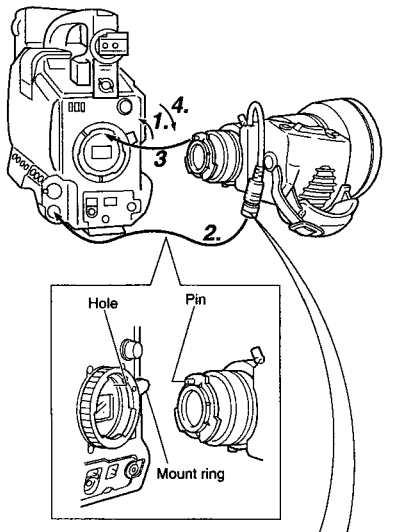

When unplugging the cable connector, first remove the lens itself. Then grasp this portion and pull straight out.

1. Loosen the mount ring.
2. Connect the cable connector.
3. Attach the lens with its pin aligned with the hole in the mount.
4. Tighten the mount ring.

CAUTION:

Be sure to tighten the mount ring completely. Incomplete tightening may result in the lens dropping off or disturbed back focus.

3-3 Attaching the Viewfinder

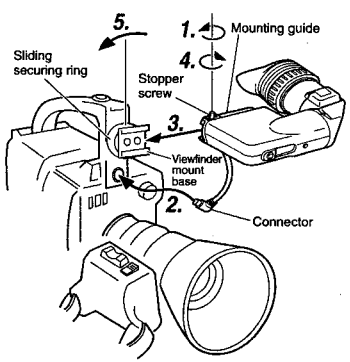

1. Loosen the stopper screw on the viewfinder.
2. Connect the connector.
3. Align the mounting guide with the camera's viewfinder mount base and attach the viewfinder.
4. Tighten the stopper screw.
5. Tighten the sliding securing ring.

* To detach the viewfinder, reverse the mounting procedure.

3-4 Attaching the Microphone (provided)

Provided Microphone

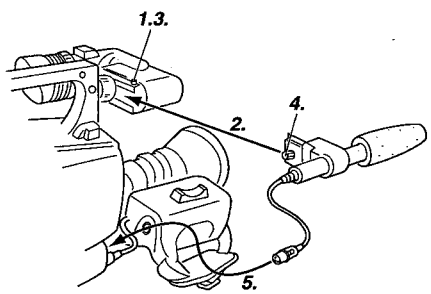

Connecting the provided microphone to the viewfinder. The provided microphone is a phantom microphone.

1. Loosen the stopper screw on the viewfinder.
2. Attach the microphone to the attachment guide on the viewfinder as illustrated.
3. Confirm that there is no gap between the microphone and the viewfinder, and then tighten the stopper screw.
4. Tighten the microphone screw. The microphone should be firmly attached.
5. Connect the cable from the microphone to the MIC IN connector on the front section of the camera.
6. Secure the microphone cable using the cable clamp provided on the front side of the microphone holder.

CAUTION:

When this microphone is attached, the range that the viewfinder can be moved to the left will be reduced. Please purchase a separately sold microphone if you prefer to observe through the viewfinder using your left eye.

3-5 Attaching the Microphone (optional)

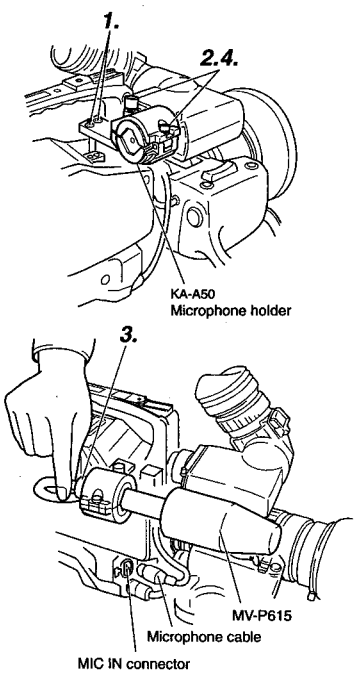

With the optional KA-A50 microphone holder, the optional microphones MV-P615 (Phantom microphone) can be used.

■ Attaching the Microphone with KA-A50

1. Secure the microphone holder with 2 screws.
2. Turn the small knob located on the outer side of the microphone holder anticlockwise to loosen it, and loosen the large knob located on the inner side in the same way. Rotate the large knob fully anticlockwise to open the holder.
3. Attach the microphone to the microphone holder so that the microphone does not interfere with the cassette cover.
4. Set the microphone holder so that the height is level, and tighten the inside and outside knobs to secure the microphone.
5. Connect the microphone cable to the MIC IN input connector.
   - When the microphone is connected to CH-1 AUDIO or CH-2 AUDIO connector on the rear panel, set the CH-1 or CH-2 Audio select switch according to the microphone used.
6. Secure the microphone cable using the cable clamp provided on the front side of the microphone holder.
7. Make sure to perform the correct settings for use of a phantom microphone.
   ☞ See "CAM MIC +48V" on page 77.

Note:

- When the light mounted on the camera is used at the same time, if the microphone in use has a long sound collecting section (ultra-directional type, etc.), the microphone's shadow may influence the image.

For servicing
See the service manual page 1-16 "1.11.7 Tripod base".

3-6 Attaching the Tripod Base (provided)

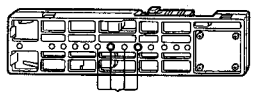

1. Tripod mounting holes

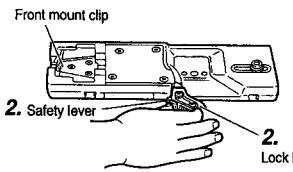

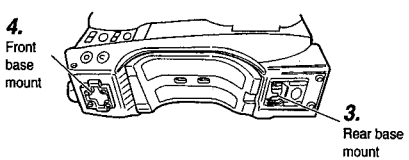

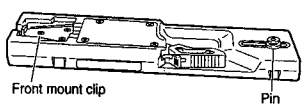

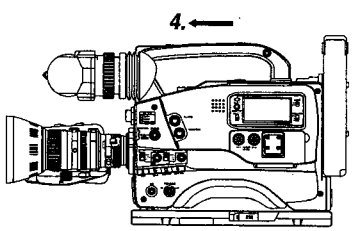

Use the provided tripod base to place the camera on a tripod.

1. Attach the tripod base on the tripod by using the hole that balances the unit most optimally.
2. While pushing the safety lever, pull the lock lever toward the front until the front mount clip clicks into place.
3. Place the unit on the tripod base by aligning the rear base mount of the unit with the pin on the tripod base.
4. Push the unit from the upward direction and slide it toward the front so that the front base mount of the unit is locked by the front mount clip of the tripod base as it clicks into place.

CAUTION:
- The front base mount may be locked while the pin of the tripod base is not inserted into the hole on the rear base mount of the unit. Therefore, after mounting, make sure that these parts are engaged properly.
- When moving the unit mounted on a tripod, any impact or vibration should be avoided as this may cause the unit to become detached and to drop from the tripod. Be sure to remove the unit from the tripod before transporting it.

3-7 Inserting and Replacing Backup Lithium Batteries

The GY-DV500 uses a lithium battery for backup of the time code data. Install the provided lithium battery before actually using the unit.

- **Lithium battery: CR2032**

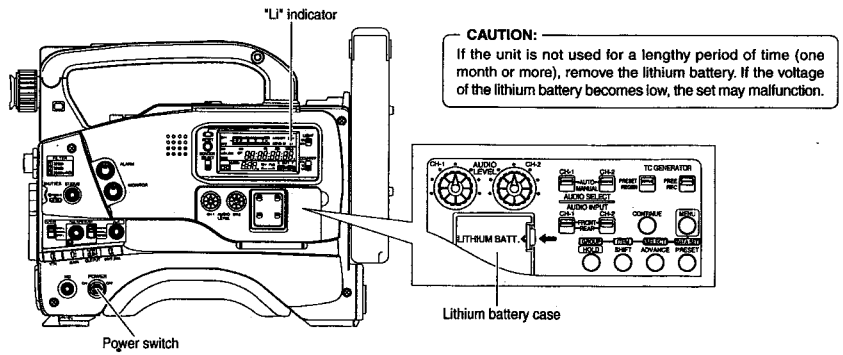

CAUTION:
If the unit is not used for a lengthy period of time (one month or more), remove the lithium battery. If the voltage of the lithium battery becomes low, the set may malfunction.

When the lithium battery is not in place or the battery is exhausted and requires a replacement, the "Li" indicator in the LCD display will light up.

Replace lithium batteries with the POWER switch set to ON. Doing it with the POWER switch set to OFF will cause the loss of backup data.

■ How to Install the Lithium Battery

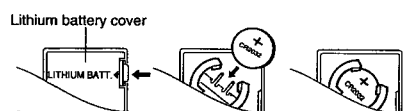

1. Push the lithium battery cover in the direction of the arrow as illustrated and remove the cover.
2. Slide the battery into place with its ⊕ marked surface facing upward.
3. Return the lithium battery cover to its original position in the unit.

■ How to Remove Lithium Batteries

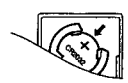

■ The lithium battery is easily removed if you press at the edge of the lithium battery at the place indicated in the illustration on the left and then pull the battery out.

After replacing the lithium battery, set the date and time.
To do this, see page 41 "Setting the Date and Time".

4. POWER SUPPLY

The GY-DV500 is operable with AC power supply or battery pack.

4-1 AC Operation

Use the JVC AA-P250 AC power adapter (max. rated output 12.5 V DC, 3.5 A) as the AC power supply.

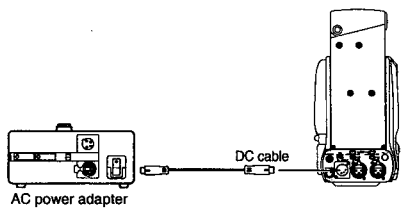

Do not use any power source with large fluctuations in the power source voltage, or power sources generating noise, such as ripples.

1. After making sure that the power switches of the GY-DV500 and of the AA-P250 are set to OFF, connect the DC cable from the AA-P250 to the DC INPUT connector of the GY-DV500 as shown in the illustration.
2. When the AA-P250 is used, set the CHARGE/CAMERA switch to CAMERA.
3. Press the POWER switch of the GY-DV500 to ON. Power is supplied to the VCR section and the camera.
   * For details, read the instruction manual of the AA-P250.

Note:
Do not remove or connect the DC cable while recording is being performed.

4-2 Battery Pack Operation

The GY-DV500 can be operated with the following battery packs.

- **Flat shape type battery pack**
- **Anton-Bauer battery pack**
  - Propack 13/14 Series
  - Trimpack 13/14 Series
  - Magnum 13/14 Series
  - Compack 13/14 Series

* An Anton-Bauer battery pack cannot be connected directly to the GY-DV500. It is necessary to mount the optional battery holder.
  Battery holder: Anton-Bauer QRQ27
  For details, see page 37 "Using an Auton-Bauer Battery Pack".

- When the DC cable is connected to the DC INPUT connector, the power supply from the battery pack is interrupted and the power starts to be supplied through the DC INPUT connector.
- Do not connect or disconnect the DC cable while operating with a battery pack.
  The following symptoms may occur if the DC cable is connected or disconnected while operating with a battery pack.
  - The power is cut off for a moment when the DC cable is disconnected.
  - Noise to the video and audio signals occurs. Audio signal are muted.
- When operation is continued with DC input after the battery pack capacity has been used up, set the POWER switch to OFF after the DC power is applied. Then switch ON again.
- If the GY-DV500 is left with the battery pack attached, a small amount of power is consumed even if the POWER switch on the GY-DV500 is set to OFF. Remove the battery pack when the GY-DV500 is not going to be used.

4-2 Battery Pack Operation (Cont'd)

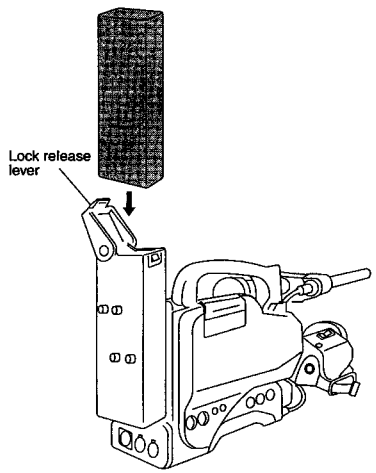

Attaching a Flat Shape Type Battery Pack

1. Open the battery case cover while pushing the lock release lever.
2. Insert the battery pack into the battery case with its electrodes facing the unit.
3. Close the battery case cover.

Be sure to set the POWER switch to OFF before replacing the battery pack.

4-2 Battery Pack Operation (Cont'd)

Using an Anton-Bauer Battery Pack

To use an Anton-Bauer battery pack (Propack 13/14, Trimpack 13/14, Magnum 13/14, Compack 13/14 Series), it is necessary to detach the battery case from the GY-DV500 and replace it with the Anton-Bauer battery holder. Use the following battery holder.
• Battery holder: Anton-Bauer QRQ27

Detaching the Battery Case From the GY-DV500 and Attaching The Anton-Bauer Battery

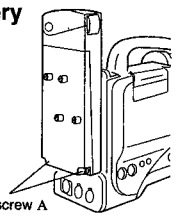

1. Black screw A

1. Remove the two black screws A on the battery case.
2. Remove the lower half of the battery case cover in the downward direction.

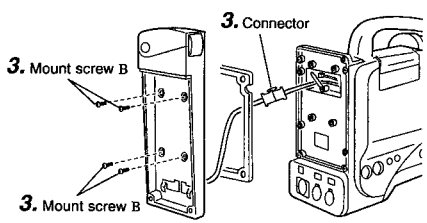

3. To remove the battery case, remove the four screws B fixing the battery case and the connector connecting the battery case to this unit.

Attaching the Anton-Bauer Battery Holder
Anton-Bauer Battery Holder

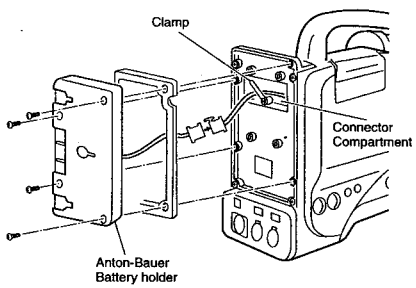

4. Connect the connectors protruding from the GY-DV500 with the connectors on the battery holder.
   * Following connection of the connectors, insert them into the connector compartment and secure with the clamp.
5. Secure the battery holder to the GY-DV500 with the four mount screws provided with the battery holder.

* Take care not to pinch the wires. This could result in damage.

Attaching and Detaching an Anton-Bauer Battery Pack

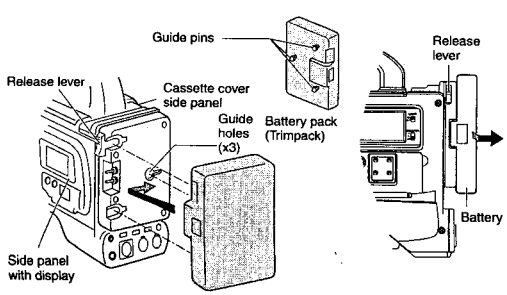

Attaching the Battery Pack

1. Align the 3 guide pins of the battery pack with the guide holes on the battery holder, and push straight to insert the battery pack.
   The battery cannot be attached properly if the guide pins are not inserted straight.
2. Slide the battery pack toward the side panel where the cassette cover is located until it clicks. Now the battery pack has been attached.

Detaching the Battery Pack

■ While pushing and holding the release lever, slide the battery pack toward the side panel where the LCD display is located, then pull the battery pack outward to remove.

4-2 Battery Pack Operation (Cont'd)

REMAINING BATTERY POWER DISPLAY

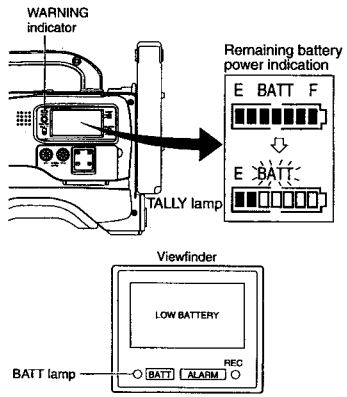

To display the remaining battery power accurately, set the VCR Setup Menu item No. 396 BATTERY TYPE according to the type of the battery pack in use.
☞ See page 69.

The status of the remaining battery power can be checked by the Remaining Battery Power Display.
☞ See page 22.

■ When the remaining battery power is nearly exhausted, the following warning messages will appear. In this case, replace with a fully charged battery as soon as possible.
- Remaining battery power indication:
  Segment bar and "BATT" indicator start to blink
- WARNING indicator and TALLY lamp blink
- Viewfinder:
  - BATT lamp and TALLY lamp blink
  - "LOW BATTERY" character indication (Status 0 or Status 1 mode)
- Alarm sound beeps

After the remaining battery power warnings appear, the GY-DV500 automatically stops operation if the battery power operation is continued.

Operating Time with Battery Pack

When the VF-P115B is used as the viewfinder and a fully charged battery pack is attached, the approximate continuous operating time is as follows:

Battery Pack	Continuous Operating Time (at 25 °C)
NP-1B	60 minutes
Magnum 14	130 minutes
NP-L40	80 minutes

- Battery operating time may differ depending on the number of times the battery has been charged, charging conditions and the operating environment, etc. Use the values in the table on the left for approximate reference times.
- Operating time is reduced in areas with a cold environment.
- Operating time is reduced when the power zoom lens is used frequently.

PRECAUTIONS FOR THE BATTERY PACK

- When the battery pack is not in use, it must be stored in a cool, dry place.
  Do not leave the battery pack in a place where it might be subject to a high temperature (under direct sunlight in a car, etc.), this could cause leakage of the fluid or shorten service life.
- When the terminal section of the battery pack gets dirty, the operating time will be shortened.
- If the operating time becomes greatly reduced even immediately after recharging, the service life of the battery pack is nearly finished. Purchase a new battery pack.

Recharging

- Recharge the battery pack after completely discharging it. Repeated recharging with residual charge remaining could result in reduced battery capacity.
- If the battery capacity is reduced by repeating incomplete recharging, or recharging without discharging, once discharge the battery pack completely, then recharge it to restore the battery capacity.
- If the battery pack is recharged with its internal temperature raised immediately after use, recharging may not be performed completely.

5. PREPARATIONS

5-1 Turning the Power ON

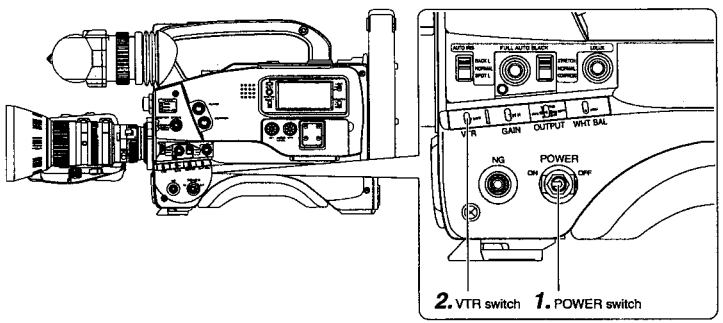

1. Turn the POWER switch to ON.
- ■ The power is then supplied to the unit.
- • Video image is output to the viewfinder.
- • The display of the VCR section is turned on.

2. Select the GY-DV500 operation mode with the VTR switch.
- • The GY-DV500 operation mode may differ when the power is turned ON and when the cassette is loaded depending on the setting of the VTR switch as follows:

VTR switch setting	GY-DV500 operation mode
SAVE	GY-DV500 enters the SAVE mode (tape protect mode) and stops the drum motor. "SAVE" is displayed in the VCR operation indicating section of the Status 1 mode screen in the viewfinder. In this mode, the tape is effectively protected. In this condition, press the VTR trigger button to start recording. However, it takes longer for the operation to take place from this condition than from the STBY mode.
STBY	When a recordable videocassette is loaded, the GY-DV500 enters the record-pause mode automatically. (The drum motor is still rotating.) "STBY" is displayed on the Status 1 screen in the viewfinder. In this condition, pressing the VTR trigger button starts recording immediately.

CAUTION:
Wait at least 5 seconds before turning the power ON again once it has been turned OFF.
When the power is turned OFF, the unit automatically enters the tape protect mode. It takes approximately 5 seconds to enter the tape protect mode. Do not turn the power ON again within this interval.

5-2 Cassette Loading and Unloading

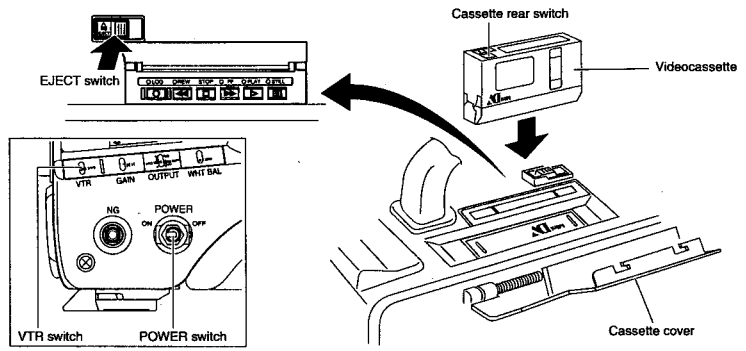

- • A cassette cannot be loaded or unloaded while the GY-DV500 is in POWER OFF mode.
- • Use a videocassette tape marked MiniDV.
- • The videocassette should be held vertical and inserted straight into the slot.

Loading the Cassette

1. Set the POWER switch to ON.

2. Slide the EJECT switch to the side to open the cassette cover.

3. Insert a videocassette into the cassette slot after removing the tape slack.
Ensure that the videocassette is fully inserted.

The cassette indicator on the display blinks during tape loading and lights steadily after the loading has been completed.

4. Slowly close the cassette cover by pushing it in all the way.
When the cassette cover is closed, the OPERATE LED lights up green and the unit is in the condition where it can be operated. In the SAVE mode, the OPERATE LED lights orange.

- • The condition at the completion of loading varies depending on the position of the VTR switch and the switch on the back of the videocassette as shown below.

VTR switch	Switch on Back of Videocassette	
	REC	SAVE
STBY	Enters record-pause mode after back-spacing.	The unit enters stop mode. "REC INH" is displayed for a few seconds on the counter display.
SAVE	In the record-pause mode and the drum rotation is stopped.	

* Recording can be started by pressing the VTR trigger button from the record-pause condition. For details, see page 50 "Basic Record-ing Operation".

After the cassette cover is closed, it takes about 8 seconds before the unit can start recording or before it enters the stop mode.

CAUTION:
The GY-DV500 cannot be operated while the cassette cover is open. Make sure to close the cover before operating the unit.

Unloading the Cassette

1. Set the POWER switch to ON.

2. Slide the EJECT switch all the way to the side to start tape ejection.

The cassette indicator on the display blinks during tape ejection and turns off after the ejection has been completed.

- • It takes a few seconds before the cassette is ejected after the EJECT switch is moved.

3. Take out the videocassette.

4. Close the cassette cover.

CAUTION:
Do not leave the unit for a long period with the cassette cover open as dirt or other foreign objects may enter the VCR section and cause malfunction.

5-3 Setting the Date and Time

The date and time of the built-in clock should be set. During shooting, the date and time data are recorded in the sub-time code area on the tape.
During playback, the data are shown on the counter display. Powered by the backup lithium battery, the set date and time data continue to count even when the power is switched off.

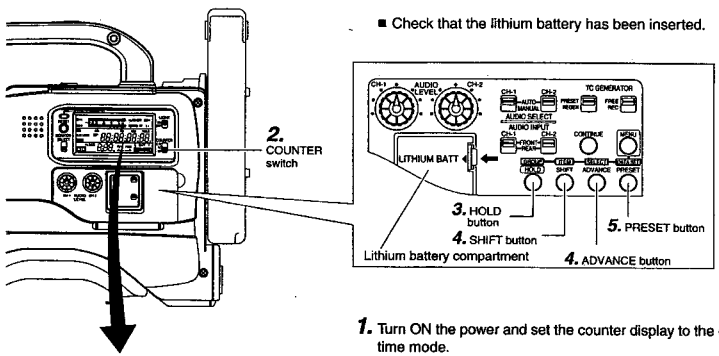

■ Check that the lithium battery has been inserted.

Time display (COUNTER switch: TC)

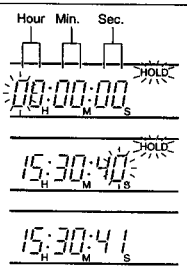

Date display (COUNTER switch: UB)

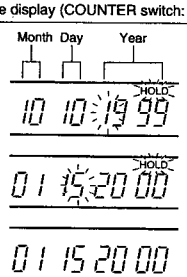

1. Turn ON the power and set the counter display to the date/time mode.
- Set the VCR Setup Menu item No. 516 DISPLAY SELECT to "CLOCK".
  ☞ See "Displaying and Setting VCR Setup Menus" on page 67.
  ☞ See "VCR Setup Menu" on page 69.

2. Set the COUNTER switch to TC or UB.
■ To set the time: Set the switch to TC.
The time (Hour, Min., Sec.) is indicated on the counter display. (24-hour clock system)
■ To set the date: Set the switch to UB.
The date (Month, Day, Year) is indicated on the counter display.

3. Press the HOLD button to enter the setting mode.
The "HOLD" indicator lights up on the display to indicate that the unit is in the setting mode.
The leftmost digit on the counter blinks.

4. Set the date and time.
- Each time the ADVANCE button is pressed, the value of the blinking digit increases.
- Each time the SHIFT button is pressed, the digit to the right of the currently blinking one starts blinking. When pressed while the rightmost digit is blinking, the leftmost digit starts blinking again.
  Repeat the above procedure to set the value of all the digits.

5. To decide the set date and time data, press the PRESET button.
The "HOLD" indicator on the display turns off and the date/time display stops blinking.
The time starts counting.

Memo:
To display and set the time code or user's bit, set the VCR Setup Menu item No. 516 DISPLAY SELECT to "TC".

6. SETTING AND ADJUSTMENTS BEFORE SHOOTING

6-1 Camera Settings

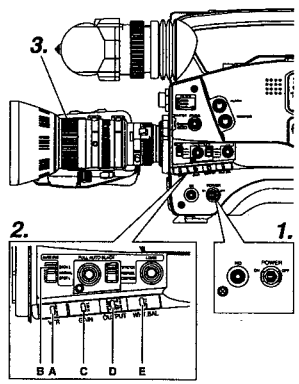

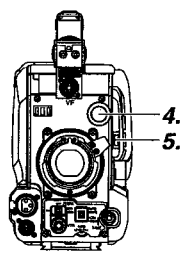

1. POWER ON
① First place a charged battery pack in the battery case on the rear section of the unit. If battery pack is not used, connect DC power to the DC INPUT connector on the rear section of the unit using the AC power adapter (AA-P250) to supply DC 12 V current.
② Set the POWER switch on the unit to ON.

2. SWITCH positions
A. Set the VTR switch to STBY.
B. AUTO IRIS switch; set to NORMAL.
C. GAIN switch; set to L. The L position is 0 dB.
D. OUTPUT switch; set to CAM\AUTO KNEE OFF.
E. WHT. BAL (Auto White Balance) switch; set to A or B.

3. Set the lens' iris mode switch to "A" (AUTO IRIS side)

4. Choose the proper color temperature conversion filter.

	FILTER	Suitable Location
1	3200K	Indoors, dark outdoors
2	5600K	Outdoors
3	5600K+ND	Outdoors under clear sky

5. Using the SHUTTER dial, set the shutter speed to OFF.

6-2 Viewfinder Adjustment

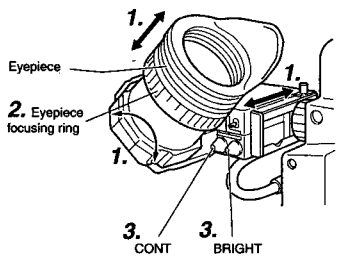

1. Adjust the position and angle of the viewfinder.

2. Diopter adjustment

Rotate the eyepiece focusing ring until the viewfinder screen image is clearly visible.

3. Brightness and contrast adjustment

When the ambient brightness changes, etc., the brightness and contrast of the viewfinder screen can be adjusted with the BRIGHT and CONT controls.

6-3 External Monitor Adjustment

Display the camera built-in color bar signal on the video monitor and adjust the colors, contrast and brightness.

1. Connect a color video monitor to the MONITOR OUT connector of the GY-DV500.
2. Set the OUTPUT switch to BARS to output the color bar signal (SMTPE type color bars).
3. Set the monitor's BLUE CHECK function to ON so that the screen turns entirely blue.
4. Adjust the CHROMA control of the monitor so that there is no difference in brightness between the color bars 1 and 8, 7 and D.
5. With the BLUE CHECK function ON, adjust the PHASE control of the monitor so that there is no difference in brightness between the color bars 3 and 0, 5 and B.
6. If the phase control adjustment above causes a difference in brightness between the color bars 1 and 8, 7 and D, start again from the CHROMA control adjustment in step *4*.
7. Set the monitor's BLUE CHECK function to OFF to switch the monitor back to the standard screen (R, G and B will all appear).
8. Use the monitor's brightness control to adjust so that the color bars H and I disappear but J is visible.

1. Connect a colour video monitor to the MONITOR OUT connector of the GY-DV500.
2. Set the OUTPUT switch to BARS to output the colour bar signal (EBU type colour bars).
3. Set the monitor's BLUE CHECK function to ON so that the screen turns entirely blue.
4. Adjust the CHROMA control of the monitor so that there is no difference in brightness between the colour bars 1 and 7.
5. With the BLUE CHECK function ON, adjust the PHASE control of the monitor so that there is no difference in brightness between the colour bars 3 and 5.
6. If the phase control adjustment above causes a difference in brightness between the colour bars 1 and 7, start again from the CHROMA control adjustment in step *4*.
7. Set the monitor's BLUE CHECK function to OFF to switch the monitor back to the standard screen (R, G and B will all appear).

■ SMTPE type color bars

White	Yellow	Cyan	Green	Magenta	Red	Blue
①	②	③	④	⑤	⑥	⑦
Blue ⑧	Black ⑨	Magenta ⑩	Black ⑪	Cyan ⑫	Black ⑬	White ⑭
Black ⑮	White ⑯	Black ⑰			⑱ ⑲ ⑳	㉑

■ EBU type colour bars

White	Yellow	Cyan	Green	Magenta	Red	Blue	Black
①	②	③	④	⑤	⑥	⑦	⑧

The colour bar screen has a configuration as shown above.
The description hereinafter refers to the positions in the colour bar screen using the numbers.

6-4 Back Focus Adjustment

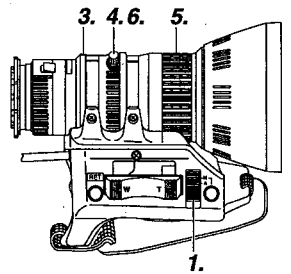

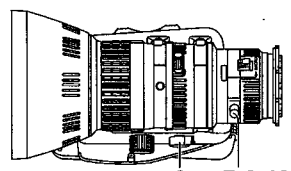

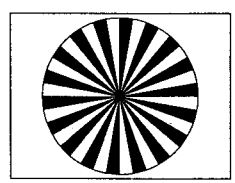

Siemens star chart

It is only necessary to perform this when the lens is attached for the first time or when focusing is not correct in both the telephoto and wide-angle positions. Adjust the viewfinder for sharpness first.

It is easier to adjust back focus when the subject is more than 3 meters from the camera.
The optimal subject for this adjustment is a Siemens star chart.

1. Set the IRIS mode switch to M (Manual).
2. Set the zoom mode to MANU (Manual).
3. Open the iris ring. If the illumination is too strong, reduce it or move to a darker place.
4. Turn the zoom lever until the lens is at the maximum telephoto position.
5. Bring the subject into focus.
6. Set the lens to maximum wide-angle.
7. Loosen the back focus ring retaining knob.
8. View the same subject and adjust the back focus ring for the best possible focus.
9. Repeat steps *4.* through *8.* about three times for fine adjustment until the subject remains in focus in both the telephoto position and the wide-angle position.
10. Tighten the back focus ring retaining knob to secure the ring.

Memo:

ACCU FOCUS can also be used in the above step *3.*

6-5 White Balance Adjustment

Since the color of light (color temperature) varies depending on the light source, it is necessary to re-adjust the white balance when the main light source illuminating the subject changes.

Note:
When a subject illuminated by a halogen lamp with a color temperature of 3,200K is shot while the color temperature conversion filter setting is set to 5,600K, a proper white balance adjustment and (FAW) Full Time Auto White balance may not be accomplishable. In this case, change the color temperature conversion filter setting to 3,200K and then carry out the white balance adjustment and (FAW) again.

- Do not adjust using any highly reflective objects, such as metal, etc., as this may result in improper white balance adjustment.

WHITE BALANCE ADJUSTMENT

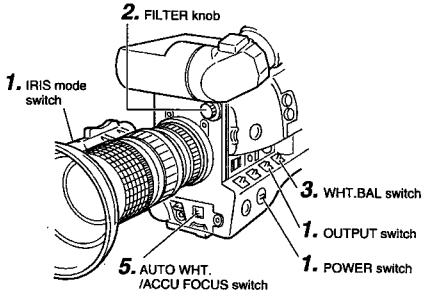

During operation

Result message

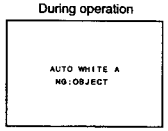

Improper object

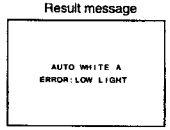

Insufficient illumination

Excessive illumination

Two kinds of white balance adjustment results can be stored in memories AUTO1 and AUTO2.

■ **Adjustment procedure**

1. Set the following switches.
   - Set the POWER switch to ON.
   - Set the OUTPUT switch to CAM-AUTO KNEE OFF.
   - Set the IRIS mode switch of the lens to A (Auto).
2. Set the FILTER knob according to the current lighting.
3. Set the WHT.BAL switch to A or B.
4. Place a white object near the centre of the screen under the same lighting conditions as the target subject and zoom in to fill the screen with white.
5. Tilt the AUTO WHT./ACCU FOCUS switch upward (to AUTO WHITE) once and release it.
   "AUTO WHITE A, B OPERATION" is displayed in the viewfinder while the auto white balance adjustment circuit operates.
   "AUTO WHITE A, B OK" is displayed when the white balance has been adjusted properly.

Error messages

- **NG: OBJECT (Improper object)**
  Displayed when there is not enough white color on an object or the color temperature is not suitable.
  Replace the color temperature conversion filter or use another white object and re-adjust the white balance.
- **ERROR: LOW LIGHT (Insufficient illumination)**
  Displayed when the illumination is dim. Increase the illumination and then re-adjust the white balance.
- **ERROR: OVER LIGHT (Excessive illumination)**
  Displayed when the light is excessively bright. Decrease the illumination and then re-adjust the white balance.

FULL-TIME AUTO WHITE BALANCE (FAW)

The FAW function adjusts the white balance value automatically as the lighting condition changes.

This mode is convenient when you have no time to adjust the white balance or when the camera is moved frequently in and out of places under different lighting conditions.

■ **Setting procedure**

The FAW function can be activated with item "FAW" on the OPERATION MENU.
This item allows allocation of the FAW function to one of the WHT.BAL switch positions, A, B or PRESET.
☞ See "OPERATION Screen" on page 73.

CAUTION:
- The FAW (Full-time Auto White balance) function cannot provide optimum white balance with a subject outside the FAW adjustment range, for example when it contains only a single color or not enough white color.
- The accuracy of the FAW (Full-time Auto White balance) is inferior to that of the manual white balance.
- When the power is turned on with the FAW mode selected, it takes about 10 seconds for the FAW adjustment to be completed. Do not shoot within this interval.

6-6 Switch Settings of the VCR Section

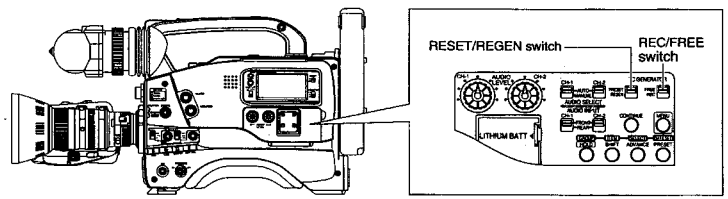

■ **Audio input signal selection**
Use the AUDIO INPUT switch to select whether the sound recorded on audio channel 1 or 2 is the sound from the microphone connector on the front section or the sound from the AUDIO INPUT connector on the rear section.
☞ See page 47.

■ **Audio recording level adjustment selection**
Select "AUTO" or "MANUAL" for the recording level adjustment mode for each audio channel.
☞ See page 48.

■ **VCR Setup Menu setting**

- REMOTE SELECT
  Confirm that "LOCAL" is selected if you want to operate on the GY-DV500 only.
- BACK TALLY MODE
  Select the lightning pattern of the BACK TALLY lamp.
- INPUT SELECT (U-ver. only)
  Select the input video signal. To record the GY-DV500's signal, set to "CAMERA".☞ See page 68.
- LOW CUT IN
  For each audio input connector, select whether or not the lower frequency components of the audio signal are cut.
  Set to this position to eliminate the wind noise of the microphone.
- SAMPLING RATE
  Select the sampling rate for audio recording (48 kHz or 32 kHz).
- FRONT VOLUME ENABLE
  Set whether or not the front section's audio volume control should be used. The front section's audio volume control only affects the CH1 audio channel.
- LONG PAUSE TIME
  Select the time (in minutes) until the GY-DV500 enters the tape protection mode (drum rotation stops) when the record-pause mode is continued for long time.
- SSF MODE
  Select the mode of the S.S.F. (Super Scene Finder) function.
  S.S.F. function: Stores the time code of desired scenes or cue points in the unit's memory.
  ☞ See "How to Use the S.S.F. Function" on page 60.
- DISPLAY SELECT
  Select the counter display (time code or date/time indication) when the COUNTER switch is set to "TC" or "UB".

■ **Setting the time code recording function**

The GY-DV500 records SMPTE-standard time code for U-ver. or EBU-standard time code for E-ver. during recording. Set the switches according to applications.

- To record a time code as set in the built-in time code generator:
  - Set the PRESET/REGEN switch to PRESET.
  - Set the REC/FREE switch.
    If it is required to record continual time codes across different scenes, set the switch to REC.
  - VCR Setup Menu setting (U-ver. only)
    Select the time code generator's framing mode as drop frame or non-drop using the VCR Setup Menu item No. 416 "NON DROP/DROP".
- To record a time code in continuation of the existing time code on the tape:
  - Set the PRESET/REGEN switch to REGEN.

For details on the time code operations including time code presetting, see "TIME CODE OPERATION" on page 56.

6-7 Audio Input Signal Selection

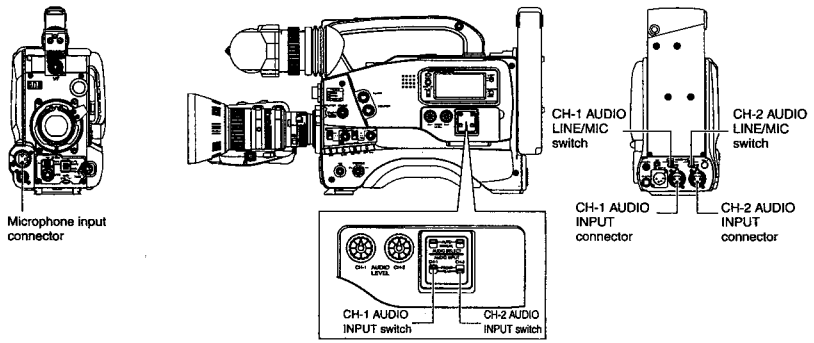

The GY-DV500 is provided with the microphone connector on the front section and the two AUDIO INPUT connectors at the rear section for audio input.
On the other hand, two channels of sound can be recorded on the tape in digital PCM format.
Using the AUDIO INPUT switch, select for each channel (CH1 and CH2) whether the sound to be recorded should be the sound from the microphone connector on the front section or the sound from the AUDIO INPUT connectors on the rear section.

■ Selecting the CH-1 channel input sound

Make the selection using the CH-1 AUDIO INPUT switch.
FRONT : The sound from the microphone connector on the front section is recorded on the CH-1 channel.
REAR : The sound from the CH-1 AUDIO INPUT connector on the rear section is recorded on the CH-1 channel.

■ Selecting the CH-2 channel input sound

Make the selection using the CH-2 AUDIO INPUT switch.
FRONT : The sound from the microphone connector on the front section is recorded on the CH-2 channel.
REAR : The sound from the CH-2 AUDIO INPUT connector on the rear section is recorded on the CH-2 channel.

■ Selecting the front section's microphone connector

A microphone (phantom microphone, etc.) requiring +48 V power supply or other type of camera microphone (monaural) can be connected.
- In accordance with the connected microphone, specify the phantom microphone or other type of microphone using the Camera Setup Menu item CAM MIC +48V.
- The reference input level is -60 dBs.

■ Selection of rear audio input connectors

Select the audio signal input to the AUDIO INPUT connector using the [LINE/MIC] switch. Make settings for the CH-1 and CH-2 AUDIO IN connectors separately.

LINE : Set to this position when connected to audio equipment, etc.
The reference input level is +4 dBs.

MIC : Set to this position when using a monaural microphone.
The reference input level is -60 dBs.

MIC +48 V : Set to this position when a microphone (phantom microphone) requiring +48 V DC power supply is connected.

CAUTION:
When connecting a component that does not require +48 V power supply, make sure that the LINE/MIC switch is not set to MIC +48V.
When using the microphone on the front section, set the Camera SETUP screen item "CAM MIC +48V" to "OFF". Neglecting this could cause damage to the connected component. ☞ See page 77.

6-8 Recording Level Adjustment

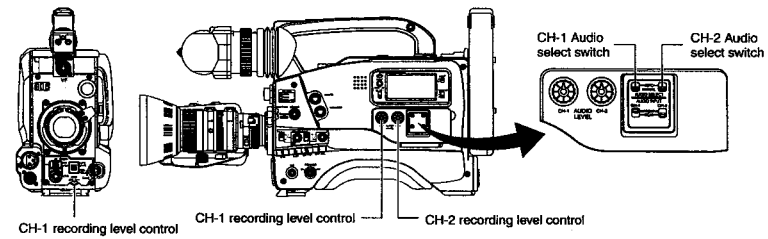

For each audio channel, use the AUDIO SELECT switches to select whether the recording level adjustment should be set to AUTO mode or MANUAL mode.
- When set to AUTO: Recording level is fixed. In this mode, the recording level control does not function.
- When set to MANUAL: Recording level can be adjusted using the recording level controls for each audio input.

■ Adjusting the recording level control of the front section

The recording level control on the front section only affects the CH-1 channel sound.
To use the recording level control on the front section, make the following settings.
- Set the CH-1 AUDIO SELECT switch to MANUAL.
- Set the VCR Setup Menu item No. 246 FRONT VOLUME ENABLE to "ENABLE".

CAUTION:
The recording level controls on the side section work regardless of the setting of the VCR Setup Menu item No. 246 FRONT VOLUME ENABLE. ☞ See page 68.

Manual Adjustment of Recording Level

The recording level can be adjusted manually when the GY-DV500 is in the record, record-pause or stop mode.

1. Set the AUDIO SELECT switch of the channel whose recording level that you want to adjust manually to MANUAL.
2. Rotate the recording level control corresponding to the audio input to be adjusted.
   - Adjust so that the peak level does not exceed the -3dB point when a loud sound is input.
   - With microphone input, since the limiter circuit is activated, the recording level will not exceed 0 dB even if the recording level control is turned up.

■ How to use the recording level control on the front section

① Set the recording level control on the front section to maximum (10) position.
② Initially, adjust the recording level using the CH1 recording level control on the side.
③ When a loud sound is input during recording, use the recording level control on the front section to lower the recording level.

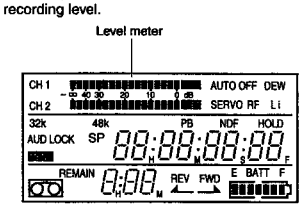

Viewfinder Status 1 Mode

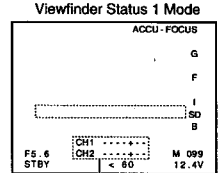

Indicator level (reference)

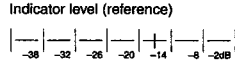

CAUTION:
When the AUDIO INPUT LINE/MIC switch on the rear section is set to MIC, be sure to check that the microphone is connected to the AUDIO INPUT connector. If the microphone is not connected, increasing the recording level could cause noise from the input connector to be recorded on the tape. When the microphone is not connected to the AUDIO INPUT connector on the rear panel, set the LINE/MIC switch to LINE or turn down the recording level control.

6-9 Monitoring Audio during Recording

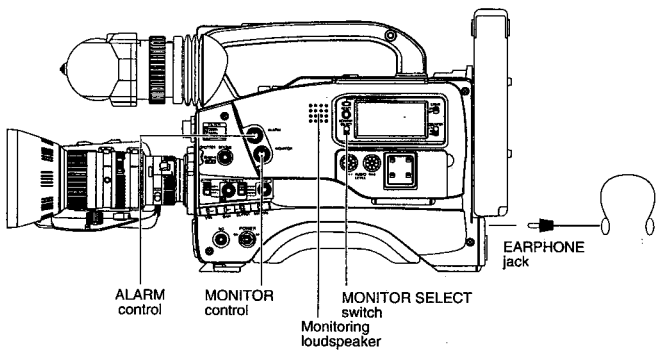

The audio input during recording, in record-pause or stop mode can be monitored through the monitoring loudspeaker or earphone.

- The monitoring audio is not output from the loudspeaker while the EARPHONE jack is in use.
- Select the audio channel to be monitored using the MONITOR SELECT switch.
  CH-1 : The sound input to the CH-1 channel is output.
  MIX : The sound input to the CH1 and CH2 channels is output mixed.
  CH-2 : The sound input to the CH-2 channel is output.
- The MONITOR volume control adjusts the monitoring volume.
- The loudspeaker or earphone outputs an alarm tone in the case of an abnormal condition occurring in the unit.
  An alarm tone is also output when the tape end is reached or when the battery is running down. The alarm tone volume can be adjusted with the ALARM control. For details on the alarm tone, see page 87.

* Do not increase the audio monitoring volume excessively; otherwise howling with the camera microphone may occur.

7. SHOOTING OPERATION

7-1 Basic Recording Operation

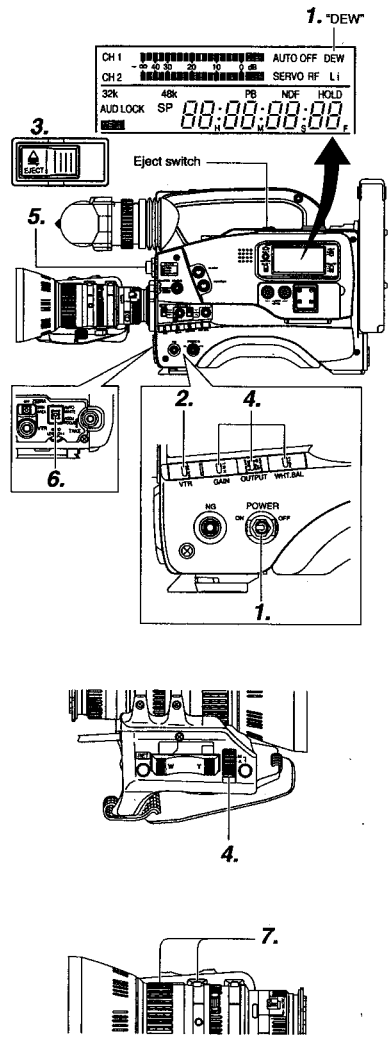

1. Set the POWER switch to ON.

Power is supplied to the unit.
Check that the condensation indicator "DEW" does not appear on the display. If it is lit, wait until the indicator goes out.

2. Set the VTR switch to the STBY position.

Even when the VTR switch is set to the "SAVE" position, pressing the VTR trigger button will start recording. However, in this case, it is necessary to wait a short time until the recording actually starts.
For details on the VCR SAVE mode, see page 52.

3. Slide the EJECT switch to open the cassette cover.
- Ensure that the switch on the back of the videocassette is set to REC and insert the cassette correctly.
  When the cassette is inserted, the tape is loaded and the unit enters the record-pause mode.
- Slowly close the cassette cover.

- Use a videocassette marked MiniDV.
- If the cassette cover is not closed, the GY-DV500 will remain inoperative.
- At the loading time and power switch set to on time, the built-in head cleaner will emit a sound while operating. This does not indicate a malfunction.
- After the cassette cover is closed, it takes about 8 seconds before the unit is ready for recording.

4. Set the switches as required.
- GAIN : Sensitivity suitable for the subject
- OUTPUT : "CAM/AUTO KNEE ON"
- WHT-BAL : "A" or "B"
- Set the IRIS switch of the lens to "A".

5. Select the FILTER according to the lighting condition.
Position 1 (3200K) : For shooting indoors or outdoors when illumination is not sufficient
Position 2 (5600K) : For shooting outdoors
Position 3 (5600K + ND): For shooting outdoors under a clear sky.

6. Adjust the white balance.
☞ See "White Balance Adjustment" on page 45.

7. Point the camera at the subject and determine the angle of view and focus with the zoom lever and the focusing ring.

7-1 Basic Recording Operation (Cont'd)

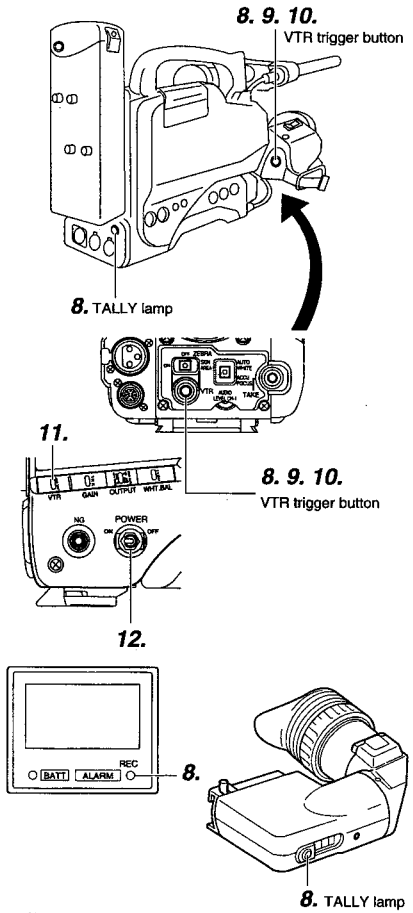

8. Press the VTR trigger button on the GY-DV500 or lens to start recording.
Once recording has started, the BACK TALLY lamp on the rear section of the unit and the tally lamp on the viewfinder light red, and the REC indication in the viewfinder lights green.

Note:
* The lightning conditions of the BACK TALLY lamp on the rear section of the unit can be changed by setting the VCR Setup Menu item No. 082 BACK TALLY MODE.
* The lamp in the viewfinder and on the front section will blink from when the button is pressed and until recording actually starts. ☞ See page 68.

9. To stop recording, press the VTR trigger button again. The TALLY lamp and REC indicator lamp go out and the unit enters the record-pause mode.
When the VTR trigger button is pressed, the unit enters the record-pause mode after rewinding the tape for about 2 seconds (back-spacing).

10. To restart recording:
Press the VTR trigger button on the GY-DV500 or lens.

11. Ending recording:
Enter record-pause mode and perform the following operations as required.
- When it is required to unload the videocassette:
  - Slide the EJECT switch.
- When it is required to put the unit in save mode:
  - Set the VTR switch to SAVE.
    Drum rotation stops and the GY-DV500 enters the tape protection/power-saving mode.

12. When shooting is completely finished, eject the cassette and set the POWER switch to "OFF".
When the unit is not going to be used for a long period, detach the battery pack.

About the QUICK REC Mode

If the VTR trigger button is pressed immediately after the videocassette is inserted, the mode becomes the QUICK REC mode that enables quick start of recording.
However, when shooting starts in the middle of the tape, a blank space appears as the new scene will not be linked smoothly with the previous image.
Also, the time code does not continue. (Some overlap may also occur.)

Note:
- The unit enters stop mode at tape-end automatically, and if kept longer than 3 or 30 minutes in this mode, SAVE mode is maintained. ☞ See "Menu No. 307: LONG PAUSE TIME" on page 69.
- If the VTR trigger button is pushed very quickly and repeatedly, or the POWER switch is moved immediately after being pressed, the viewfinder REC indicator lamp may blink and the GY-DV500 may not enter the record mode. To remedy this condition set the POWER switch to OFF and wait for 5 seconds or more before turning the power on again.
- A neat transition to the next recorded scene cannot be guaranteed if you end a recording by turning the POWER switch or DC power supply OFF, or by removing the battery pack.
- Before recording a scene that is particularly important, perform test shooting to ensure that normal recording is possible.
- The power consumption can be reduced by setting the LIGHT switch on the display and TALLY lamp to OFF.
- The microphone may pick up the sound of the lens' iris if the iris is changed abruptly or the iris is manually moved abruptly during recording. If you find the noise annoying, please purchase an optional microphone in order to move the microphone away from the lens or ensure that the iris is not changed abruptly during shooting.

For servicing
The QUICK REC mode of this unit is different from conventional models such as (GY-X1, GY-X2, and GY-X2B). It is not a fully automatic mode operation. In this case it is a function that shortens the time to the initiation of the start of the recording.

7-2 VCR Save Mode

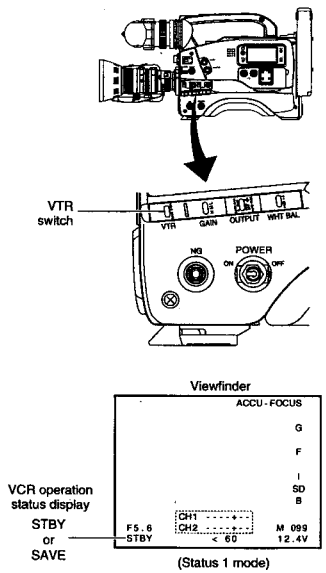

When a recordable videocassette is loaded, the GY-DV500 enters the record-pause mode. However, the record-pause operation condition differs depending on the setting of the VTR switch.

- **VTR switch setting**

STBY : The GY-DV500 enters the record-pause mode, and the drum is rotating at this time. (Standby mode)
The "STBY" indicator appears in the VCR operation status display in the viewfinder (in Status 1 mode).
- In this condition, recording starts immediately when the VTR trigger button is pressed.

SAVE : The GY-DV500 enters the record-pause mode but the drum is not rotating. (Save mode).
The tape is protected.
The "SAVE" indicator appears in the viewfinder (in Status 1 mode).
The OPERATE indicator lights orange. The display backlight turns off.

Note:
When the VCR Setup Menu item No. 396 SSF MODE is set to the CUE MODE or MARK mode, the VCR save mode is not entered.

Recording from the Save mode

- In the save mode, pressing the VTR trigger button will start recording.
  However, in this case, it takes several seconds before the GY-DV500 starts recording.
- Pressing the VTR trigger button again interrupts the recording and the GY-DV500 enters the save mode again.

7-3 If Unit is Left in Record-Pause (Standby) Mode

When the GY-DV500 has remained in record-pause (standby) mode for about 30 minutes, the unit enters the save mode, in which the drum rotation is stopped automatically and the tape tension is released. (Save mode)

- To start recording from the save mode, press the VTR trigger button; the drum starts to rotate and recording starts in about 3 seconds.
- To return to the record-pause mode from the save mode, press the VTR trigger button TWICE; the drum starts to rotate.

- The time until the unit enters the save mode after it is placed in record-pause mode can be set to 3 minutes or 30 minutes with the VCR Setup Menu item No. 307 LONG PAUSE TIME.
  When used in a cold environment, the setting will be 3 minutes regardless of the setting on the VCR Setup Menu.
  ☞ See page 69.

For servicing
See the service manual page 2-7 "2.4.3 Cleaning".

7-4 Checking Recorded Contents in Record-Pause Mode (Recording Check Function)

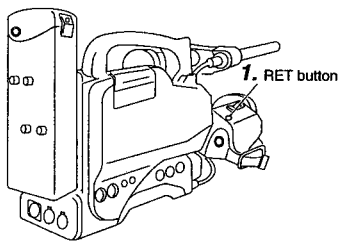

The recording check function is only valid in the standby mode (VTR switch set to STBY).
In the record-pause mode, approximately 2 seconds of the last recorded portion can be played back.

- The recorded contents can be checked in the viewfinder or on a monitor connected to the MONITOR OUT or Y/C OUT connectors.
- In the viewfinder or on the monitor connected to the MONITOR OUT or Y/C OUT connectors, the video image from the VCR section is output.

1. In the record-pause mode, press the RET button on the camera lens section.
- The tape is slightly rewound and played back for approximately 2 seconds.
  After playback is finished, the tape returns to the position at which the RET button is pressed and the record-pause mode resumes.

■ When the RET button is kept pressed, the tape is rewound and played back for approximately 10 seconds at maximum.
- While the RET button is pressed, the record-mode is not entered even if the VTR trigger button is pressed.

- This function does not work when the GY-DV500 is in the save mode or stop mode.
- During recording check, the following indications will appear if the error rate increases due to head clogging, etc.
  - "RF" appears on the display panel.
  - "HEAD CLOG" appears on the counter display.
  - "VTR WARNING (HEAD)" appears in the viewfinder.

See the instructions page 8 "Head Cleaning".

8. PLAYBACK MODE

8-1 Playback Procedure

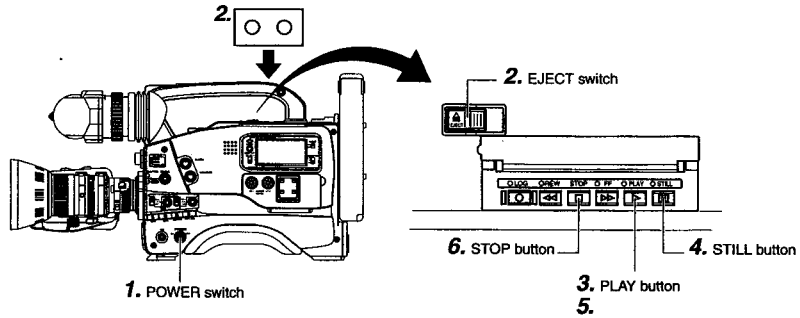

Operation

1. Set the POWER switch to ON.

2. Load the recorded videocassette correctly.
- Slide the EJECT switch to the side. When the cassette cover opens, insert the videocassette and then close the cassette cover again.
- ■ When a recordable videocassette (with the switch on the back of the cassette set to REC) is loaded, the unit enters the record-pause mode (STBY mode).
  In this case, press the STOP button to release the record-pause mode.

3. Press the PLAY button.
➡ The PLAY indicator lights and playback starts.

4. Press the STILL button to stop playback temporarily.
➡ The STILL indicator lights and the unit enters the still mode.

5. To re-start playback, press the PLAY button.
➡ The STILL indicator goes out and playback starts again.

6. To stop playback, press the STOP button.
➡ The PLAY indicator goes out and the unit enters the stop mode.

CAUTION:
- When the still picture mode or stop mode has continued for about 30 minutes, the unit automatically switches to the save mode to protect the tape.
  The time until the tape protect mode is initiated can be set to 3 or 30 minutes with the VCR Setup Menu item No. 307 LONG PAUSE TIME.
  When used in a cold environment, the setting will be 3 minutes regardless of the setting on the VCR Setup Menu.
- Noise may appear in the picture during still mode. This does not indicate a malfunction.
- When the automatic tracking function is activated at the start of the playback mode, digital noise may appear on the playback image. This does not indicate a malfunction.
- This unit does not allow manual tracking adjustment.
- When playing back a tape recorded on another unit, digital noise may appear during playback. This does not indicate a malfunction.
- Following the loading, the built-in head cleaner will emit a sound while operating. This does not indicate a malfunction.

8-2 Fast-Forward, Rewind

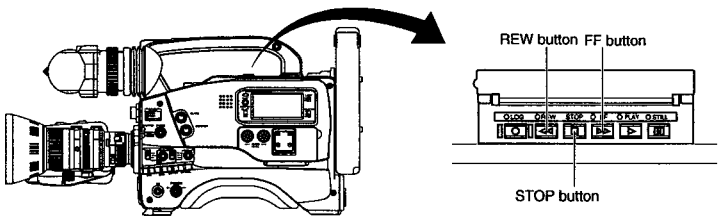

- Press the FF button in stop mode to fast forward the tape. Press the REW button in stop mode to rewind the tape.
- Press the STOP button to stop fast forwarding or rewinding.

- When the tape approaches the end during fast forwarding or rewinding, the tape speed decelerates to protect the tape.
- The time required for fast forwarding and rewinding may become longer when used in a cold environment. This is not a malfunction.

8-3 Search

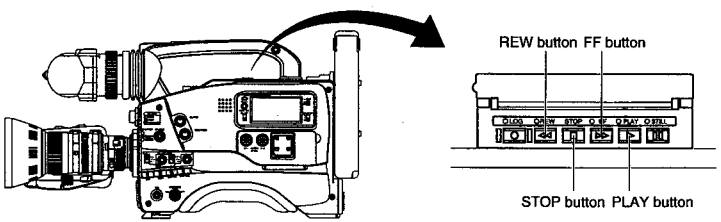

- Press the FF button in play mode to search the tape in the forward direction at about 10 times the normal speed.
  - Press the REW button in play mode to search the tape in the reverse direction at about 10 times the normal speed.
- Press the PLAY button to resume normal playback.
- Press the STOP button to stop.

- The audio is reproduced during the search.
- Video noise may be observed or the image may become unstable during the search, but this is not a malfunction.

9. TIME CODE OPERATION

The GY-DV500 records SMPTE-standard time codes for U-ver. or EBU-standard time codes for E-ver. and user's bits. In the play or the record mode, the reproduced time codes or user's bits are shown on the counter display.
• Time code data cannot be output through the unit's connectors.

9-1 Displaying Time Code

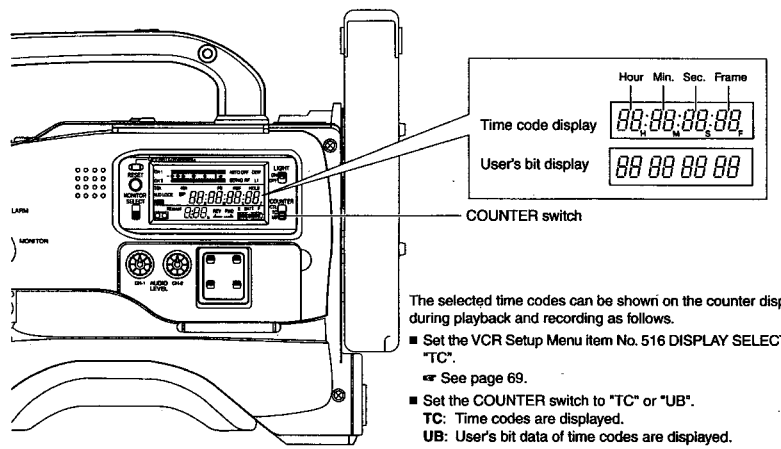

The selected time codes can be shown on the counter display during playback and recording as follows.

- Set the VCR Setup Menu item No. 516 DISPLAY SELECT to "TC".
  ☞ See page 69.
- Set the COUNTER switch to "TC" or "UB".
  TC: Time codes are displayed.
  UB: User's bit data of time codes are displayed.

9-2 Presetting and Recording of Time Code

The time code or user's bit data to be recorded onto the tape can be preset to a desired value.

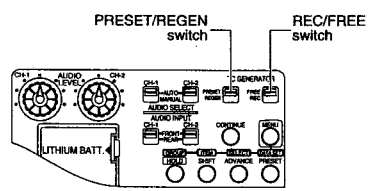

U-ver. only

Drop frame/Non-drop frame mode
In the NTSC system, the actual number of frames per 1 second is approximately 29.97 frames, but the number of frames that becomes the processing reference of the time code is 30 frames. To compensate for this difference, the mode called drop mode drops frame 00 and 01 for every minute that cannot be divided by 10.
The non-drop frame mode is when no frames are dropped and the actual time shift is neglected.

Note:

When the VCR Setup Menu item No. 398 SSF MODE is set to CUE MODE or MARK MODE, the time code generator's running method is internally set to the REGEN mode.
If No. 398 SSF MODE is not set to OFF, the time code cannot be preset.

■ Setting the time code related switches

- Set the PRESET/REGEN switch to "PRESET".
- Set the REC/FREE switch.

REC : The data preset in the time code generator runs only during recording.
Use this setting if it is required to record continual time codes across different scenes.
* However, approximately ±1-frame variations may occur in scene transition accuracy.

FREE : The time code starts to run from the time it is preset in the time code generator.

■ Setting the VCR Setup Menu (U-ver only)

- Set the VCR Setup Menu item No. 516 DISPLAY SELECT to "TC".

Select the time code generator's framing mode using the VCR Setup Menu item No. 416 NON DROP/DROP.

DROP : The time code generator's running method is set to the drop frame mode.
Use this setting when placing emphasis on the recording time.
The "DF" indicator lights up on the display in the drop-frame mode.

NON DROP : The time code generator's running method is set to the non drop frame mode.
Use this setting when placing emphasis on the number of frames.

In the NON DROP frame mode, the "NDF" indicator lights on the display.

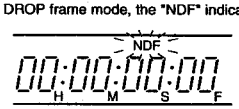

TIME CODE PRESETTING PROCEDURE (for U-ver.)

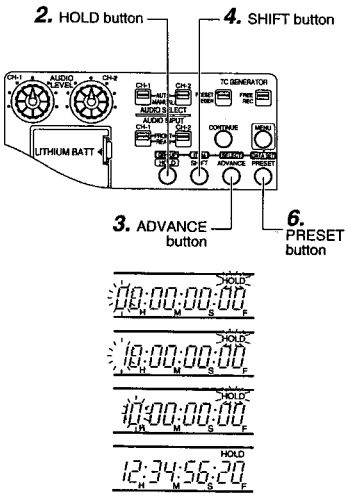

1. Display the time code on the counter display.
   Set the COUNTER switch to "TC".
   - Time code up to 23 hrs. 59 min. 59 sec. 29 frames can be preset.
2. Place the time code generator in preset mode.
   Press the HOLD button.
   - The "HOLD" indicator lights on the display to indicate the preset mode. The first digit of the counter display blinks.
3. Set the value of the blinking digit.
   Press the ADVANCE button.
   - The value of the blinking digit changes.
4. Change the blinking digit.
   Press the SHIFT button.
   - The blinking digit changes.
5. Set the desired value for all digits.
   Repeat steps *3.* and *4.* for each digit.
6. Preset the set data in the memory.
   Press the PRESET button.
   - The set data is saved as the time code generator value. Following the above operation, the "HOLD" indicator disappears from the display, the counter stops blinking and the time code is preset.
   - If the REC/FREE switch is set to FREE, the time code starts to run.

■ If you preset a wrong time code, perform steps *2. 3. 4. 5.* and *6.* again.

TIME CODE PRESETTING PROCEDURE (for E-ver.)

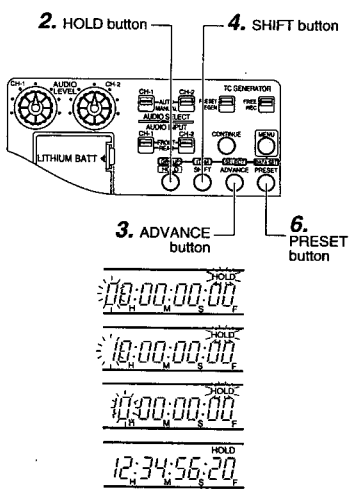

1. Display the time code on the counter display.
   Set the COUNTER switch to "TC".
   - Time code up to 23 hrs. 59 min. 59 sec. 24 frames can be preset.
2. Place the time code generator in preset mode.
   Press the HOLD button.
   - The "HOLD" indicator lights on the display to indicate the preset mode. The first digit of the counter display blinks.
3. Set the value of the blinking digit.
   Press the ADVANCE button.
   - The value of the blinking digit changes.
4. Change the blinking digit.
   Press the SHIFT button.
   - The blinking digit changes.
5. Set the desired value for all digits.
   Repeat steps *3.* and *4.* for each digit.
6. Preset the set data in the memory.
   Press the PRESET button.
   - The set data is saved as the time code generator value. Following the above operation, the "HOLD" indicator disappears from the display, the counter stops blinking and the time code is preset.
   - If the REC/FREE switch is set to FREE, the time code starts to run.

■ If you preset a wrong time code, perform steps *2. 3. 4. 5.* and *6.* again.

PRESETTING USER'S BIT DATA

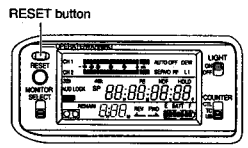

- Pressing the RESET button in the preset mode resets the time code or user's bit data to 00 00 00 00.
- If you press the HOLD button by mistake, press the HOLD button once more to return to the previous display.

■ Display user's bit data on the counter display and perform the same procedure as the time code presetting procedure.
- The user's bit can be specified using numerals or alphabetic letters from 0 to F for each digit.

Note:
Do not specify F in the user's bit data.
Specification of F results in a special setting and reading of user's bit data during playback may become impossible.
If all user's bit digits are set to F, the data cannot be read.

9-3 Recording Time Codes in Continuation of Time Codes Recorded on Tape

The GY-DV500 also incorporates a time code reader. Therefore, when the unit enters record mode from record-pause mode, it can read the time code data recorded on the tape and record time codes in continuation of the existing data. The recorded user's bit data is identical to the user's bit data recorded on tape.
* However, approximately ±1-frame variations may occur in scene transition accuracy.
To enable this, set the time code related switches as follows before starting recording.

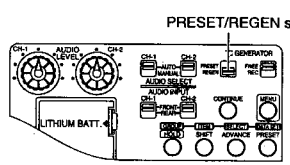

Setting

■ Set the VCR Setup Menu item No. 516 DISPLAY SELECT to "TC".
☞ See page 69.

■ Set the counter display to show time codes or user's bit data.

■ Set the PRESET/REGEN switch to REGEN.
- The time code run mode becomes unrelated to the REC/FREE switch settings.
- The time code framing mode automatically becomes the mode (drop frame or non drop frame) already recorded on the tape.

9-4 Reproducing Time Codes

The GY-DV500 incorporates a time code reader. During playback, the time code or user's bit data recorded on the tape is displayed on the counter display.

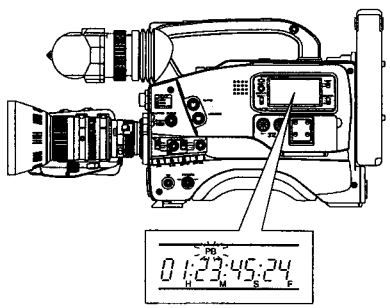

- Set the VCR Setup Menu item No. 516 DISPLAY SELECT to "TC".
  ☞ See page 69.
- Set the counter display to indicate time code or user's bit data.
- Reproducing time codes
  Press the PLAY button.
  - The "PB" indicator lights up on the display and the time code or user's bit data are indicated.

- When passing sections where the time code does not continue during playback, the time code stops running. The playback mode continues.

Note:
When a tape containing more than two hours of recorded time codes is played back on DV video equipment for normal consumer use, the time code may not be played back correctly.

10. S.S.F. (Super Scene Finder) FUNCTION

10-1 Explanation of the S.S.F. Function

During recording, the SSF function records the time code data at the point of time of a desired recorded scene in the unit's memory. Using the S.S.F. data stored in memory during after-processing of the recorded image allows efficient use of the tape.
The S.S.F. function comprises the two modes CUE and MARK. Select the mode using the VCR Setup Menu item No. 398 S.S.F. MODE.
When the VCR Setup Menu item No. 398 SSF MODE is set to CUE MODE or MARK MODE, the time code generator's running method is internally set to the REGEN mode.
When shooting in either of the modes, the time code data is stored in the unit's memory when the TAKE button on the front section is pressed.

- CUE Mode:
  When the TAKE button is pressed at the desired scene during shooting of a given cut, the time code data at that point is stored as CUE data in the unit's memory.

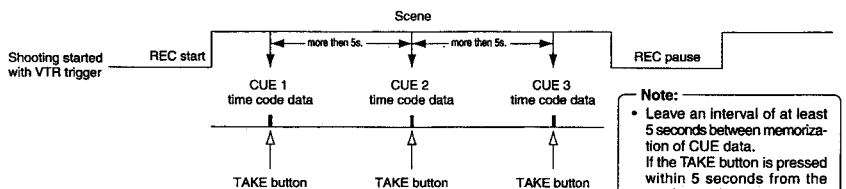

Note:
- Leave an interval of at least 5 seconds between memorization of CUE data.
  If the TAKE button is pressed within 5 seconds from the previous point, the new point is not memorized.
- In the CUE mode, the REC start/pause time code data have an error margin of approximately 3 frames.

- MARK MODE
  During shooting of a given cut, press the TAKE button at beginning of a desired scene and then press the TAKE button again at the ending of the scene.
  The time code data at the point where the TAKE button is pressed first becomes the start point of the scene and time code data at the point where the TAKE button is pressed the second time becomes the ending point, and both are stored in the unit's memory.

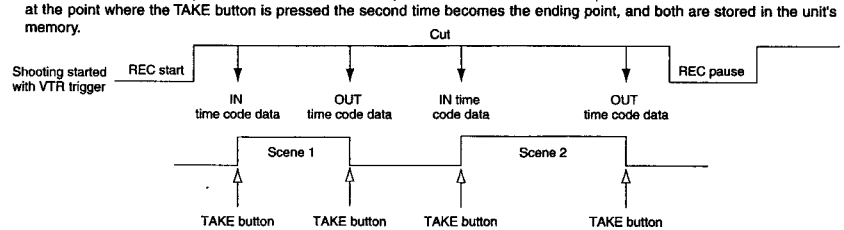

- In the MARK mode up to 119 scenes can be stored in memory. When the memory becomes full, the indication showing the number of recorded scenes on the viewfinder screen becomes "M: - - -".
  However, if mixed with the CUE mode, the maximum number of scenes that can be stored decreases for each scene.
- In the CUE mode up to 237 points can be stored in memory.
  However, for each REC start/stop the maximum number of points that can be stored decreases by two points for each scene.
  The same is true when the CUE mode is mixed with the MARK mode.
- When the videocassette is replaced, new S.S.F. data is generated. S.S.F. data for six videocassettes can be stored in the internal memory.

Note:
- Be sure to record S.S.F. data continuously on the same tape. It is not possible to rewind the tape for overwriting during the recording.
  If the tape is rewound in the middle of a recording, or after similar operation is performed, be sure to use the Scene End Cue Up function in order to ensure that new data are recorded in continuation of the existing data.
  ☞ See page 63.
- In the S.S.F. mode, the VTR save mode is not activated.

10-2 How to Use the S.S.F. Function

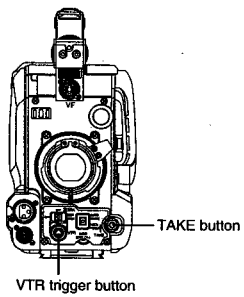

CUE Mode

1. Set the S.S.F. mode as CUE mode.
   Set the VCR Setup Menu item No. 398 S.S.F. MODE to "CUE".
   ☞ See page 69.
   • The CUE mode is indicated in the lower part of the Status 1 screen in the viewfinder.

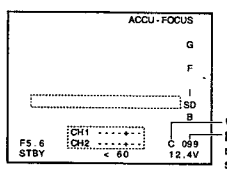

CUE mode
Number of memorized scenes
* This indicator is not indicating the number of the CUE point.

2. Press the VTR trigger button to start the recording.
3. When you reach the point that you want to memorize as the CUE point, press the TAKE button.
   • The time code data of the point where the TAKE button is pressed is stored in the unit's memory as CUE data.
   The LOG button's LED lights during memorization of the CUE point and the "*" mark is shown in the viewfinder.
   ■ Press the TAKE button each time you reach a point that you want to memorize as CUE data.
4. Stop the recording.
   Press the VTR trigger button.

MARK Mode

1. Set the S.S.F. mode as MARK mode.
   Set the VCR Setup Menu item No. 398 S.S.F. MODE to "MARK".
   ☞ See page 69.
   • The MARK mode is indicated in the lower part of the Status 1 screen in the viewfinder.

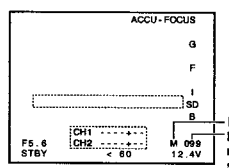

MARK mode
Number of memorized scenes

2. Press the VTR trigger button to start the recording.
3. When you reach the scene that you want to memorize, press the TAKE button.
   • The time code data of the point where the TAKE button is pressed is stored in the unit's memory as the start point of the scene.
4. When you reach the scene that you want to memorize as the ending point, press the TAKE button again.
   • The time code data of the point where the TAKE button is pressed is stored in the unit's memory as the ending point of the scene.
   • The LOG button's LED lights during memorization of the IN point and the "*" mark is shown in the viewfinder.
   The LOG button's LED remains off during memorization of the OUT point and the "*" mark is not shown in the viewfinder.
   ■ For each scene that you want to memorize, repeat steps *3.* and *4.*
5. Stop the recording.
   Press the VTR trigger button.

Note:
- Once the S.S.F. data has been written to a videocassette, it is not possible to record S.S.F. data to the tape again.
- Once a tape with recorded S.S.F. data is rewound but not ejected before playback or recording is performed on it again, the previous S.S.F. data cannot be automatically erased when S.S.F. data are recorded (when you overwrite the previous image). Therefore, the S.S.F. data of the overlapped sections will not correspond to the video image.
  Furthermore, please note that the time code data may differ from the actual data if recording is started in the CUE mode in this situation.

10-3 Deleting S.S.F. Data

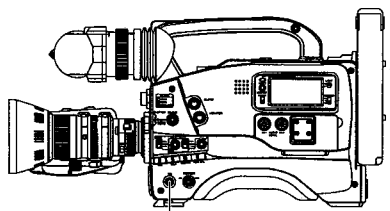

The S.S.F. data recorded in the unit's memory can be deleted in the record mode and the record-pause mode.
This function is only valid in the MARK mode.

■ In the record mode, press the NG button after the IN point has been stored or after the scene has been stored.
  • The S.S.F. data of the cut that you are currently shooting is deleted.
  When the NG button is pressed after the IN point has been stored, the scene number is not updated.
  * The S.S.F. data of previous cuts are not deleted.
■ In the record-pause mode, press the NG button.
  At the point when the TAKE button is used to store the next scene, the S.S.F. data of the immediately preceding cut is deleted.

Note:
The NG button is only valid for the immediately preceding scene. The erase of scene data by the NG button cannot be confirmed on the unit.

10-4 Resetting S.S.F. Data

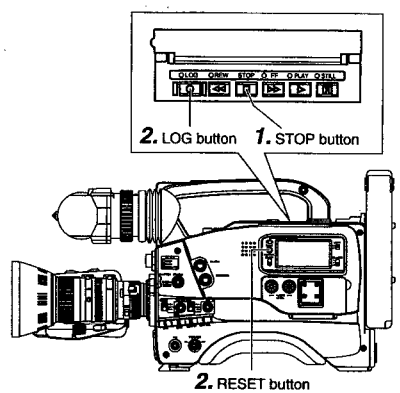

Operation

1. Press the STOP button to enter the stop mode.
2. Press the RESET button while the LOG button is kept pressed.
   • All the S.S.F. data held in the memory are erased.
   However, the reel number is not cleared.

Note:
The unit is not provided with a function for reading out the S.S.F. data from a tape.
Necessary data should be moved to another device before resetting. Also, to read out the S.S.F. data from a tape, please use the optional DV Videocassette Recorder BR-DV600.

10-5 Writing S.S.F. Data to Tape

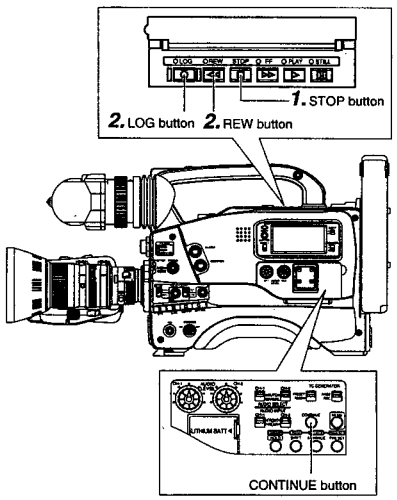

S.S.F. data stored in the unitís memory can be written to the beginning of tape.

Operation

1. Press the STOP button to enter the stop mode.
2. Press the REW button while the LOG button is kept pressed.
   - The REW indicator blinks during tape transport in the writing position.
   - The LOG indicator lights while S.S.F. data are being written to the tape.
   - When writing to the tape is completed, the LOG indicator goes out.

About the Scene End Cue Up Function

■ When the CONTINUE button is pressed while the LOG button is kept pressed in the stop mode, the tape winds to the S.S.F. data's last OUT point, after which the unit enters the record-pause mode. (Scene End Cue Up) The FF button's LED blinks during the Scene End Cue Up mode.

Note:

Once a tape with recorded S.S.F. data is ejected and then reinserted again, the previous data will be erased if new S.S.F. data are recorded on the tape.

10-6 Outputting S.S.F. Data

The S.S.F. data stored in the unit's memory can be output by RS-232C control via the VTR REMOTE connector.

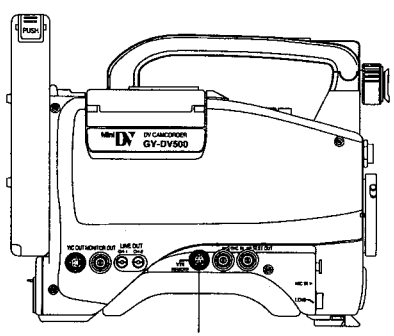

11. USING EXTERNAL COMPONENTS

11-1 Connecting a Video Component with DV Connector

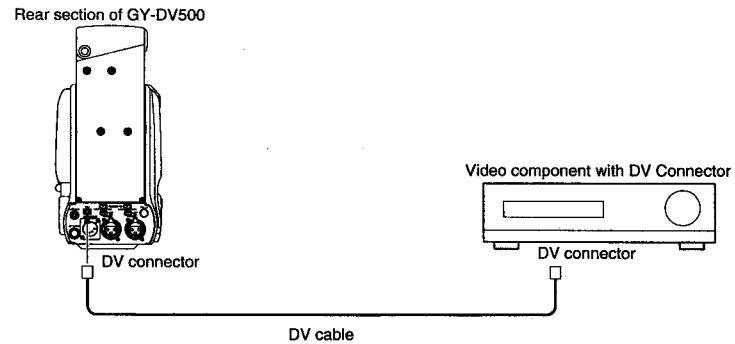

Connection

Connect the DV connector on the GY-DV500 to the DV connector on the video component using the DV cable.

Settings

■ Recording the image of the video component with DV connector on the GY-DV500

- To input the image via the DV connector, set the VCR Setup Menu item No. 126 INPUT SELECT to "IEEE1394".
  - Settings cannot be changed during recording.

☞ See page 68.

U-ver. only

■ Recording the playback image or audio of the GY-DV500 on the video component with DV connector

- To remote control the playback operation of the GY-DV500 from the video component with DV connector, set the VCR Setup Menu item No. 050 REMOTE SELECT to "IEEE1394".

☞ See page 68.

11-2 Connecting a PC

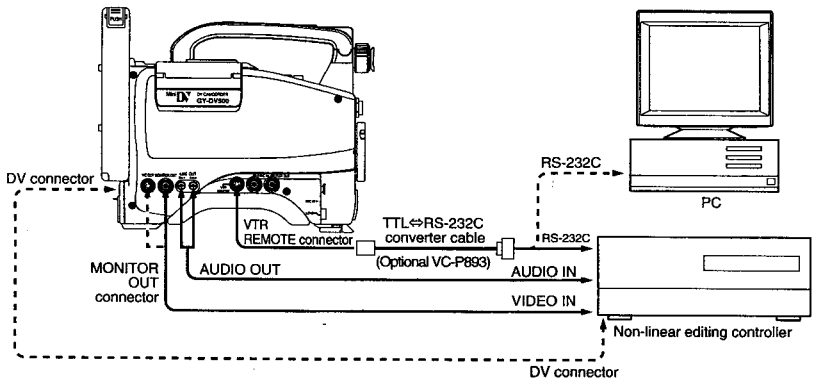

Connections

Connect the GY-DV500's VTR REMOTE connector to the RS-232C connector on the PC or the non-linear editing controller using the TTL ⇔ RS-232C converter cable.
Or connect the GY-DV500's DV connector and the DV connector of the non-linear editing controller using a DV cable.
For compatible non-linear editing controller, consult with your JVC dealer.

Settings

- To remote control the PC or non-linear editing controller by means of RS-232C, set the VCR Setup Menu item No. 050 REMOTE SELECT to "RS232C". ☞ See page 68.
- To remote control the GY-DV500's VCR using the DV connector's IEEE1394 option, set the VCR Setup Menu item No. 050 REMOTE SELECT to "IEEE1394". ☞ See page 68.

Note:

- When a cable is connected to the VTR REMOTE connector, the VTR Setup Menu is not displayed in the viewfinder. Make settings on the VTR Setup Menu while the cable is not connected.
- When a cable is connected to the VTR REMOTE connector, the VCR operation mode will not be displayed correctly on the Status1 screen in the viewfinder.

■ The S.S.F. data stored in the unit's memory is output from the VTR REMOTE connector.

12. SETUP MENU

12-1 VCR Setup Menu

The setup menus for the VCR section can be set while observing the menu in the viewfinder and on the unit's counter display.
The set contents are stored in the memory and retained even after the power is switched OFF.

VCR SETUP MENU CONFIGURATION

The VCR Setup Menu is a two-layer construction.
The VCR Setup Menu consists of seven group menus divided according to functions. When a Group menu is selected, the menu's Item menu opens. Each Item menu contains one or several items, and the various items can be set individually as required.

VCR Setup Menu

Group Name	Item Menu Contents
000 SERVO/SYSTEM	Selection of remote control to control the unit Selection of BACK TALLY lamp lighting pattern
100 VIDEO (U-ver. only)	Selection of video input
200 AUDIO	Selection of low cut for audio input signals Selection of sampling frequency for audio input signals Selection of front section audio volume control
300 SYSTEM	Selection of long pause/still duration Selection of battery type Selection of S.S.F. (Super Scene Finder) mode
400 TIME CODE (U-ver. only)	Selection of time code framing mode
500 ON SCREEN	Selection of counter display method (Time code/Date/Time)
HM HOUR METER	Display of hour meter (accumulated running time of head drum)

U-ver.

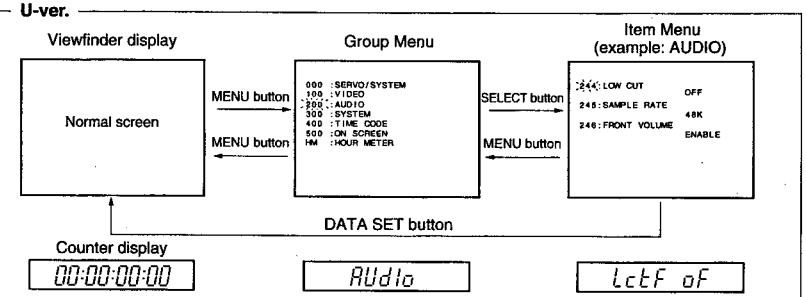

E-ver.

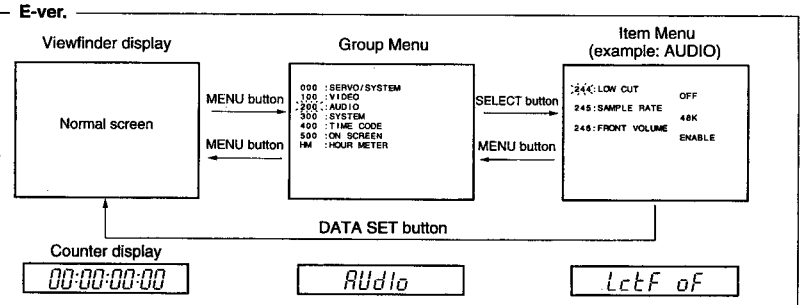

12-1 VCR Setup Menu (Cont'd)

DISPLAYING AND SETTING VCR SETUP MENUS

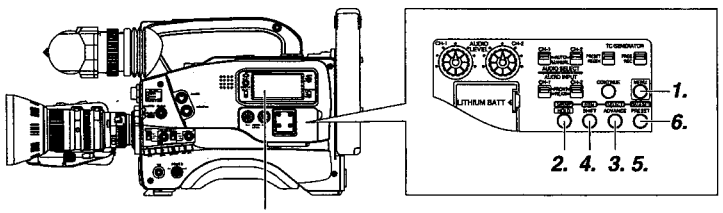

"MENU" indication

Viewfinder

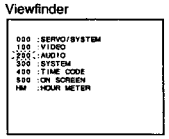

GROUP menu screen for U-ver.

Viewfinder

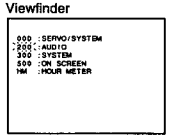

GROUP menu screen for E-ver.

Counter display

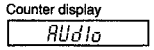

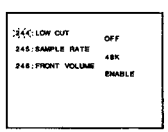

Item menu screen

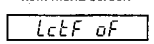

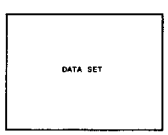

DATA SET display

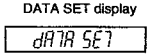

1. Engaging the VCR Setup Menu mode.
Press the MENU button.
- The "MENU" indication in the display section starts blinking and the VCR Setup Menu appears in the viewfinder and on the counter display.

Note:
When a cable is connected to the VTR REMOTE connector, the VTR Setup Menu is not displayed in the viewfinder.

2. Selecting the GROUP.
Press the GROUP button.
- Each time the GROUP button is pressed the selected GROUP number is shown blinking on the viewfinder screen. The counter display shows the selected group.

3. Open the Item menu of the selected GROUP.
Press the SELECT button.

4. Selecting the Item.
Press the ITEM button.
- Each time the ITEM button is pressed the selected item number is shown blinking on the viewfinder screen. The counter display shows the selected item.

5. Changing the setting value of the item.
Press the SELECT button and select the setting value.
- When multiple items should be set, repeat the operations of steps *4.* and *5.*
- To set menu items in other groups, press the MENU button. When the relevant group menu is displayed, perform the setting.
- When the GROUP button is pressed, the items of the higher order group menu are displayed.

6. Saving the setting value.
Press the DATA SET button.
- "DATA SET" appears in the viewfinder and on the counter display and the setting value is saved in the GY-DV500's memory. The display returns to the normal screen mode when data has been saved.
- If the MENU button is pressed without pressing the DATA SET button, the display returns to the normal screen mode without the setting value being changed.

12-1 VCR Setup Menu (Cont'd)

VCR SETUP MENU CONTENTS

Group	Item Upper row: Viewfinder display Lower row: Counter display indication	Setting Value	Contents	Factory Setting
SERVO /SYSTEM	050: REMOTE SELECT	LOCAL IEEE1394 RS232C	Selection of the method for remote control of the VCR. LOCAL : Choose this setting when the VCR should be controlled using the operation buttons on the GY-DV500 only. IEEE1394 : Choose this setting when the VCR should be remote controlled from a DV connector equipped video component connected to the DV connector on the rear section of the GY-DV500. RS232C : Choose this setting for control by means of the VCR remote control signal from the VTR REMOTE connector on the GY-DV500. * The operation buttons on the GY-DV500 remain effective even when set to IEEE1394 or RS232C.	LOCAL
	rmSL	Lc IE 23		
	082: BACK TALLY MODE	OFF ON BLINK	Selection of the lighting pattern of the BACK TALLY lamp on the rear section during recording. OFF : The lamp is always off. ON : The lamp lights during recording. It remains off until the VTR trigger button is pressed to start the recording. BLINK : The lamp lights during recording. It blinks when the VTR trigger button is pressed to start the recording.	BLINK
	rtMd	oF on bL		
VIDEO (U-ver. only)	126: INPUT SELECT	CAMERA IEEE1394	Selection of the input video signal. Settings cannot be changed during recording. CAMERA : Camera image is input. IEEE1394 : The image from the DV connector equipped video component connected to the DV connector on the rear section is input.	CAMERA
	vId	cA IEEE1394		
AUDIO	244: LOW CUT	OFF CH1 CH2 CH1 & CH2	To select whether or not the low frequencies of the audio signal from the audio input connectors are cut. Set to ON to reduce the wind noise of the microphone. OFF : The CH1 and CH2 low frequencies are not cut. CH1 : Only the low frequencies of the audio signal input to the CH1 channel are cut. CH2 : Only the low frequencies of the audio signal input to the CH2 channel are cut. CH1& CH2 : The low frequencies are cut for both CH1 and CH2.	OFF
	LctF	oF 01 02 on		
	245: SAMPLING RATE	32K 48K	To select the sampling rate for digital PCM audio recording. 32K : Digital recording occurs with 12-bit, 32 kHz sampling 48K : Digital recording occurs with 16-bit 48 kHz sampling. * The DV format offers recording tracks for up to 4 channel when recording using 12-bit, 32 kHz sampling. The GY-DV500 records two of these tracks. The GY-DV500 does not allow after-recording.	48K
	snPL	32 48		
	246: FRONT VOLUME ENABLE	DISABLE ENABLE	To select whether or not the front section recording level control should be operative. The front section recording level control only affects the audio signal recorded on CH1. DISABLE : Use of the front section recording level control is disabled. ENABLE : Use of the front section recording level control is enabled. * The CH-1 recording level control on the side section works regardless of the setting.	ENABLE
	FruL	oF on		

12-1 VCR Setup Menu (Cont'd)

Group	Item Upper row: Viewfinder display Lower row: Counter display indication	Setting Value	Contents	Factory Setting
SYSTEM	307: LONG PAUSE TIME	3MIN 30MIN	To select the time (minutes) before the save mode (drum head rotation stopped) is engaged when the record-pause, still or stop condition continues. 3MIN : 3 minutes 30MIN : 30 minutes * When used in a cold environment, the setting will be 3 minutes regardless of the setting.	30MIN
	LGPt	03 30		
	396: BATTERY TYPE	12V 13.2V 14.4V	To be set in accordance with the used battery back type. 12V : Choose this setting when using 12V battery (12V DC Flat Shape type). 13.2V : Choose this setting when using 13.2V battery (Anton-Bauer Trimpack 13, Propack 13, Magnum 13, Compack 13). 14.4V : Choose this setting when using 14.4V battery (Anton-Bauer Trimpack 14, Propack 14, Magnum 14, Compack 14). **Note:** • If this setting is neglected, the unit's display of remaining of battery power and generation of battery alarm will not work correctly. • This setting is valid when battery pack is used. It is invalid when a DC power supply is used.	12V
	bAtt	12 13 14		
	398: SSF MODE	OFF CUE MODE MARK MODE	Selection of the S.S.F. (Super Scene Finder) mode. S.S.F. function:While recording, the time code data of a desired recorded scene is stored in the unit's memory when the TAKE button on the front section is pressed. Settings cannot be changed during recording. OFF : S.S.F. function is not available. CUE MODE : Selects the CUE mode. When the TAKE button is pressed, the time code data of the scene recorded at that point is stored in the memory. MARK MODE: Selects the MARK mode. When the TAKE button is pressed the first time, the time code of this point is stored as start point of the scene. When the TAKE button is pressed the second time, the time code of this point is stored as ending point of the scene. For details on the S.S.F. function, see page 60. • When the VCR Setup Menu item No. 398 S.S.F. MODE is set to CUE or MARK, the time code generator's running method is internally set to the REGEN mode.	OFF
	SSF	oF cU nr		
TIME CODE (U-ver. only)	416: NON DROP/DROP	DROP NON DROP	Selection of the time code generator's framing mode as either drop or non-drop mode. DROP : The internal time code generator runs in drop mode. Choose this setting when emphasizing the recorded time. NON DROP: The internal time code generator runs in non drop mode. Choose this setting when emphasizing the frame number.	DROP
	tcG	dF nF		
ON SCREEN	516: DISPLAY SELECT	TC CLOCK	Selection of the appearance of the counter display when the COUNTER switch is set to "TC" or "UB". TC : The time code is displayed. CLOCK: The date/time is displayed.	TC
	dSP	tc cL		

12-2 Camera Menu Screen Flow

Camera Menu Screen Flow

As illustrated below, the Camera Menu is a menu screen comprising several layers. The first layer of the CAMERA MENU screen is for choosing and setting the menus required in accordance with functions or purposes.
The unit also allows the contents of menu settings to be stored in three files (SCENE FILE A, B, OFF).

- SCENE FILE A, B ..... By performing the FILE STORE operation on the FILE MANAGE screen, the contents of menu settings can be stored and retained in the unit. However, the SET UP menu contents are stored even if the FILE STORE operation is not performed.
  Use SCENE FILE A or B to store and retain the contents of menu settings that remain more or less fixed.
- SCENE FILE OFF ..... Whenever you want to change the menu settings, use this SCENE FILE.
  The menu setting contents are stored in the unit even if the FILE STORE operation is not performed.

When shooting, select the file with the menu settings to be used from among the three SCENE FILE files on the CAMERA MENU screen.

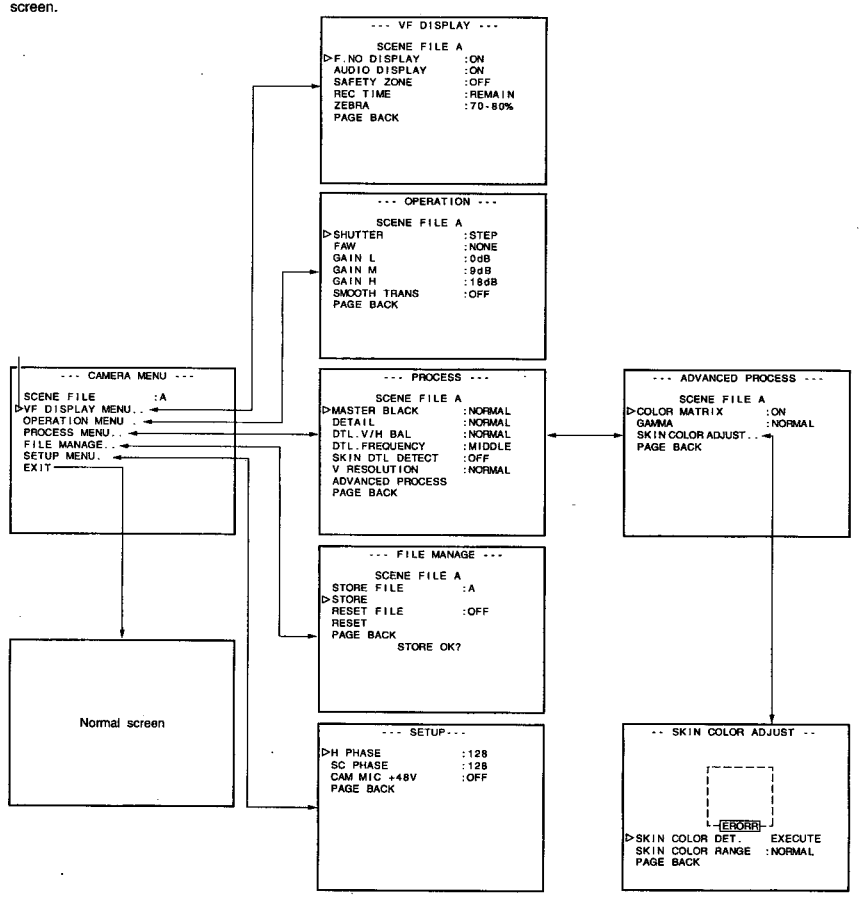

12-3 How to Select from the Camera Menu

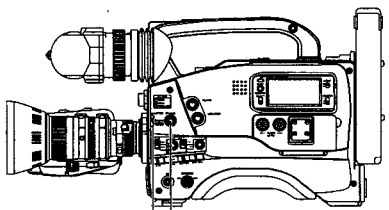

STATUS button

2. 3. 4. 5. 6. 8.

SHUTTER dial

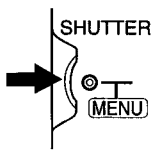

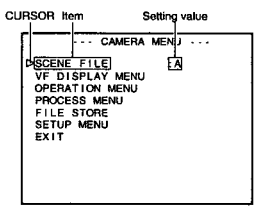

CAMERA MENU screen

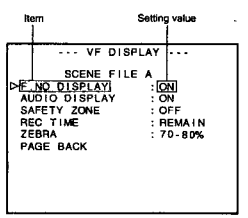

VF DISPLAY MENU screen

1. Press the STATUS button for 1 second to display the CAMERA MENU screen in the viewfinder.

2. Choose the file with the camera menu settings to be used. (SCENE FILE A, B or OFF)

① Turn the SHUTTER dial up or down to align the cursor with SCENE FILE, and then press the SHUTTER dial in the direction of the arrow.

- The area with the setting value starts blinking, and the value can now be changed.

② Turn the SHUTTER dial up or down to select the setting value. (A, B or OFF)

③ Press the SHUTTER dial in the direction of the arrow.

- The setting value stops blinking but remains lit.

3. Turn the SHUTTER dial up or down to align the cursor with the menu item to be set, and then press the SHUTTER dial in the direction of the arrow.

- The selected menu screen appears in the viewfinder.

4. Choose the menu item from the menu screen.
Turn the SHUTTER dial up or down to align the cursor with the menu item to be set, and then press the SHUTTER dial in the direction of the arrow.

- The area with the setting value starts blinking, and the value can now be changed.

5. Change the setting value.
Turn the SHUTTER dial up or down to change the setting value, and then press the SHUTTER dial in the direction of the arrow.

- The setting value stops blinking but remains lit.
- To change multiple items, repeat steps ***4.*** and ***5.*** above.

6. Return to the CAMERA MENU screen.
Turn the SHUTTER dial up or down to align the cursor with the PAGE BACK item, and then press the SHUTTER dial in the direction of the arrow.

- To change the settings of other menu screens, perform the operations described in steps ***3.*** to ***6.*** above.

7. If SCENE FILE A or B is selected, choose the FILE MANAGE item from the CAMERA MENU screen and perform the operations for storing a file.
☞ See "FILE MANAGE Screen" on page 76.

* It is not necessary to perform the file storage operations for changes made to the SETUP MENU.

8. Complete the CAMERA MENU setting.
Turn the SHUTTER dial up or down to align the cursor with the EXIT item on the CAMERA MENU screen, and then press the SHUTTER dial in the direction of the arrow.

- The normal screen returns in the viewfinder.

12-4 VF Display Screen

Item	Function, Operation	Variation Range	Initial Setting
F NO. DISPLAY	Selects whether or not the F-number of the lens iris is displayed on the Status 1 screen. ON ..... F-number is displayed. OFF ..... F-number is not displayed.	ON OFF	ON
AUDIO DISPLAY	Selects whether or not the audio indicator is displayed on the Status 1 screen. ON ..... Audio indicator is displayed. OFF ..... Audio indicator is not displayed.	ON OFF	ON
SAFETY ZONE	Selects the safety zone setting. ☞ See "Safety Zone" on page 29.	OFF ZONE 1 ZONE 2 ZONE 3	OFF
REC TIME	Sets whether the remaining tape recording time or TIME CODE is displayed on the Status 1 screen. TIME CODE ..... TIME CODE is displayed. * The time code is displayed even if the VCR Setup Menu item No. 516 DISPLAY SELECT is set to "CLOCK". REMAIN ..... Remaining time is displayed.	TIME CODE REMAIN	REMAIN
ZEBRA	Switches the luminance level of the subject sections where the zebra pattern is displayed. 70-80% ..... Zebra pattern is displayed in sections with luminance levels between 70% and 80%. 85-95% ..... Zebra pattern is displayed in sections with luminance levels between 85% and 90%. OVER 95% ..... Zebra pattern is displayed in sections with luminance levels over 95%. OVER 100% ..... Zebra pattern is displayed in sections with luminance levels over 100%.	70-80% 85-95% OVER95% OVER100%	70-80%
PAGE BACK	The CAMERA MENU returns when the SHUTTER dial is pressed with the cursor at this position.	–	–

12-5 OPERATION Screen

Item	Function, Operation	Variation Range	Initial Setting
SHUTTER	The SHUTTER button on the right side section is used to select STEP for fixed shutter speed or V.SCAN variable scanning rate for shooting computer monitor screens. STEP ..... Enables setting of different fixed shutter speeds. [1/100, 1/250, 1/500, 1/1000, 1/2000] : U-ver. [1/120, 1/250, 1/500, 1/1000, 1/2000] : E-ver. VARIABLE..... Selected when shooting computer monitor screens, etc. [Variable range: 60.1 to 2084.6 Hz, 60.3 to 2084.6 Hz (V. MAX mode)] : U-ver. [Variable range: 50.1 to 2067.8 Hz, 50.3 to 2067.8 Hz (V. MAX mode)] : E-ver.	STEP VARIABLE	STEP
FAW	Selects the W.BAL switch (⑯ on page 13) position to which the FAW (Full-Time Auto White Balance Adjustment) function is to be assigned. NONE ..... FAW function is not used. A ..... FAW is assigned to the A position. B ..... FAW is assigned to the B position. PRESET ..... FAW is assigned to the PRESET position.	NONE A B PRESET	NONE
GAIN L **GAIN M** **GAIN H**	Selects the gain value in each position of the GAIN switch (⑨ on page 13).	–3dB 0dB 6dB 9dB 12dB 18dB ALC	L: 0dB M: 9dB H: 18dB
SMOOTH TRANS	Smoothens the transition when the GAIN switch (⑨ on page 13), or WHT.BAL switch (⑯) is switched over and achieves gradual change in place of sudden change. However, the smooth transition function does not function when switching the GAIN switch set in ALC, FAS button and the LOLUX button. ON ..... Activates the smooth transition function. OFF..... Deactivates the smooth transition function.	ON OFF	OFF
PAGE BACK	The CAMERA MENU returns when the SHUTTER dial is pressed with the cursor at this position.	–	–

12-6 PROCESS Screen

Item	Function, Operation	Variation Range	Initial Setting
MASTER BLACK	Adjusts the pedestal level (master black), which is the reference of black. • To increase the pedestal level..... Increase the number. (UP) • To decrease the pedestal level .... Decrease the number. (DOWN)	MAX (100) 99 201 gradations to NORMAL (0) to -99 MIN (-100)	NORMAL
DETAIL	Adjusts the detail enhancement level. • To sharpen details ..... Increase the number. (UP) • To soften details ..... Decrease the number. (DOWN)	MAX (9) 8 16 gradations to NORMAL (0) to -5 MIN (-6)	NORMAL
DTL V/H BAL	Sets the direction, horizontal (H) or vertical (V), in which stronger detail enhancement is applied. To strengthen the H enhancement ... .. Increase the number (UP). To strengthen the V enhancement ... .. Decrease the number (DOWN). **Note:** While the LOLUX function is operating, the setting value is fixed at NORMAL and "FIX" is displayed.	H-MAX (4) 3 9 gradations to NORMAL (0) to -3 H-MIN (-4)	NORMAL
DTL. FREQUENCY	Varies the detail enhancement level by changing the detail enhancement frequency. Set in accordance with the subject HIGH ..... Applies strong detail enhancement. Used to shoot subjects with fine patterns. MIDDLE ..... Applies medium detail enhancement. LOW ..... Applies weak detail enhancement. Used to shoot subjects with large patterns. **Note:** While the LOLUX function is operating, the setting value is fixed at MIDDLE and "FIX" is displayed.	HIGH MIDDLE LOW	MIDDLE
SKIN DTL DETECT	Sets the Skin Detail function to ON or OFF. ON ..... Skin Detail function activated. OFF..... Skin Detail function not activated. ☛ See "Using the Skin Detail Function" on page 84.	ON OFF	OFF
V. RESOLUTION	Increases the vertical resolution. • NORMAL .... Vertical resolution 380 lines. • V.MAX ..... Vertical resolution 450 lines **Note:** The sensitivity is degraded and the bright sections may be colored depending on the subject.	NORMAL V.MAX	NORMAL
ADVANCED PROCESS	ADVANCED PROCESS Displays the ADVANCED PROCESS Screen. ☛ See "ADVANCED PROCESS Screen" on page 75.		
PAGE BACK	The CAMERA MENU returns when the SHUTTER dial is pressed with the cursor at this position.	–	–

12-7 ADVANCED PROCESS Screen

Item	Function, Operation	Variation Range	Initial Setting
COLOR MATRIX	Sets the color matrix OFF..... Deactivates the color matrix function ON ..... The color reproducibility is enhanced, but noise increases. **CAUTION:** During the LOLUX operation, COLOR MATRIX is fixed to the OFF setting and "FIX" is displayed.	ON OFF	ON
GAMMA	Correction of the gamma curve to decide the reproducibility of black color. • To enhance the black color reproducibility. However, halftones will be lost for white section ..... Increase the number • When reproducibility of the black color is not so important ..... Decrease the number **CAUTION:** • During LOLUX operation, "FIX" is displayed because GAMMA is fixed at the MIN value.	MAX (8) 7 17 gradations to NORMAL (0) to -7 MIN (-8)	NORMAL
SKIN COLOR ADJUST	Pressing the SHUTTER dial once when the cursor is at this position switches the screen to display the SKIN COLOR ADJUST screen.		
PAGE BACK	The PROCESS MENU returns when the SHUTTER dial is pressed with the cursor at this position.	–	–

12-8 SKIN COLOR ADJUST Screen

Item	Function, Operation	Variation Range	Initial Setting
SKIN COLOR DETECT	Sets whether it is possible to change the color used by the Skin Detail function. EXECUTE ..... Choose this setting to allow detection of the color used by the Skin Detail function. STOP ..... Choose this setting to stop detection of the color used by the Skin Detail function. ☞ See "Using the Skin Detail Function" on page 84.	STOP EXECUTE	STOP
SKIN COLOR RANGE	The setting of this item can only be changed when the SKIN COLOR DETECT item is set to EXECUTE. This setting is for adjusting the skin color range where Skin Detail functions. (When this item is selected, the area where the Skin Detail function is applicable is indicated by zebra patterns on the screen.) While viewing the zebra pattern range, perform the adjustment. Increasing the range ..... Increase the number Increasing the range . ..... Decrease the number	WIDE +19 (33 gradations) to NORMAL to -11 NARROW	NORMAL
PAGE BACK	The ADVANCED PROCESS MENU returns when the SHUTTER dial is pressed with the cursor at this position.	–	–

For servicing

See the service manual page 1-17 "1.12 CHANGING THE COLOR MATRIX SETTING".

12-9 FILE MANAGE Screen

The unit has three files that can be used for storing camera menus. The FILE MANAGE screen is for performing the operations for saving the set CAMERA MENU.

- When menu settings are made using SCENE FILE A or B, the contents of the settings will be invalid if the storage operations are not performed on this screen. However, the SETUP MENU settings will be valid even if the storage operations are not performed.
- When menu settings are made using SCENE FILE OFF, the contents are stored in the unit at the time settings are changed on each menu screen even if the storage operations are not performed.

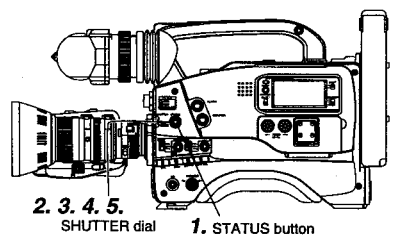

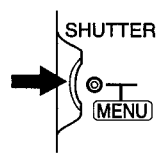

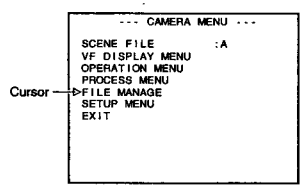

CAMERA MENU screen

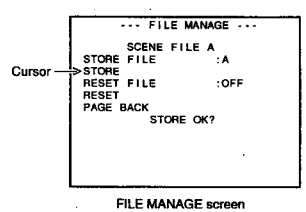

FILE MANAGE screen

Storage Operation

1. Press the STATUS button for about 1 second to display the CAMERA MENU screen.

2. Turn the SHUTTER dial to align the cursor with the FILE MANAGE item, and then press the SHUTTER dial in the direction of the arrow.
- The FILE MANAGE screen appears in the viewfinder.

3. Choose the file to save in (A or B).
① Turn the SHUTTER dial to select the STORE FILE item, and then press the SHUTTER dial in the direction of the arrow.
② Turn the SHUTTER dial to select the file to save in (A or B), and then press the SHUTTER dial in the direction of the arrow.

4. Save the menu settings.
Turn the SHUTTER dial to align the cursor with the STORE item, and then press the SHUTTER dial in the direction of the arrow.
- The "STORE OK?" message appears in the lower section of the centre of the screen.

When the SHUTTER dial is pressed in the direction of the arrow once more, the menu settings are stored in the selected STORE FILE.

5. Close the FILE MANAGE screen
Turn the SHUTTER dial to align the cursor with PAGE BACK, and then press the SHUTTER dial in the direction of the arrow.
- The CAMERA MENU screen returns in the viewfinder.

Memo:

- When changing the menu settings in SCENE FILE A and saving in STORE FILE B:
  SCENE FILE B: The contents become the menu contents of the changed settings.
  SCENE FILE A: The contents become the menu contents valid before the settings were changed.
- When changing the menu settings in SCENE FILE OFF and saving in STORE FILE B:
  SCENE FILE B: The contents become the menu contents of the changed settings.
  SCENE FILE OFF: The contents become the menu contents of the changed settings.

■ Resetting the menu settings to the initial settings is also done using the FILE MANAGE screen.

☞ See "Resetting the Camera Menu Settings" on page 78.

12-10 SETUP Screen

Item	Function, Operation	Variation Range	Initial Setting
H PHASE	For adjusting the horizontal phase of the unit in relation to the signal (external sync signal) input through the SYNC IN connector on the left side of the unit. Delaying the horizontal phase of the unit in relation to the external sync signal . ..... Increase the number Speeding up the horizontal phase of the unit in relation to the external sync signal . ..... Decrease the number * Adjustment is not possible if the external sync signal is not input. Possible values are indicated by ***.	0 to 256	128
SC PHASE	For adjusting the sub-carrier (SC) of the unit in relation to the signal (external sync signal) input through the SYNC IN connector on the left side of the unit. Rotating the sub-carrier clockwise in relation to the external sync signal ..... Increase the number Rotating the sub-carrier anticlockwise in relation to the external sync signal ..... Decrease the number * Adjustment is not possible if the external sync signal is not input. Possible values are indicated by ***. The phase will change when the power is turned on/off. The SC phase must be adjusted each time the power is turned on.	0 to 256	128
CAM MIC +48V	To set whether or not 48V voltage should be applied to the MIC IN connector on the front section. ON ..... 48V applied. OFF ..... 48V not applied.	ON OFF	ON
PAGE BACK	The CAMERA MENU returns when the SHUTTER dial is pressed with the cursor at this position.	–	–

12-11 Resetting of Camera Menu Setting Values

Using the FILE MANAGE screen, the CAMERA MENU settings can be reset to the initial setting values. On the FILE MANAGE screen, select the file of the CAMERA MENU to be reset, and then perform the resetting operation.

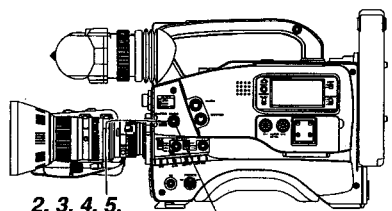

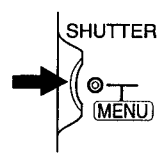

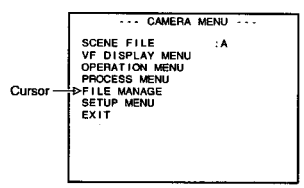

CAMERA MENU screen

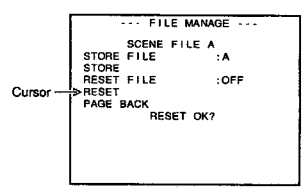

FILE MANAGE screen

Reset Operation

1. Press the STATUS button for about 1 second to display the CAMERA MENU screen.

2. Turn the SHUTTER dial to align the cursor with the FILE MANAGE item, and then press the SHUTTER dial in the direction of the arrow.
- The FILE MANAGE screen appears in the viewfinder.

3. Choose the file of the CAMERA MENU to be reset (A, B, OFF or ALL)
- If ALL is selected, all the CAMERA MENU files will be reset.

① Turn the SHUTTER dial to align the cursor with the RESET FILE item, and then press the SHUTTER dial in the direction of the arrow.

② Turn the SHUTTER dial to select the file to be reset, and then press the SHUTTER dial in the direction of the arrow.

4. Reset the camera menu settings.
Turn the SHUTTER dial to align the cursor with the RESET item, and then press the SHUTTER dial in the direction of the arrow.
- The "RESET OK?" message message appears in the lower section of the centre of the screen.

When the SHUTTER dial is pressed in the direction of the arrow once more, the CAMERA MENU settings of the selected file are reset to the initial settings.

5. Close the FILE MANAGE screen
Turn the SHUTTER dial to align the cursor with PAGE BACK, and then press the SHUTTER dial in the direction of the arrow.
- The CAMERA MENU screen returns in the viewfinder.

13. FEATURES OF THE CAMERA SECTION

13-1 Full-Time Auto White Balance (FAW)

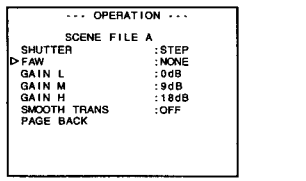

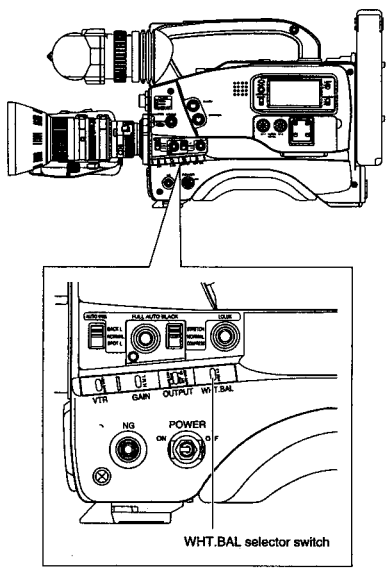

The FAW function adjusts the white balance value automatically as the lighting condition changes.

This mode is convenient when you have no time to adjust the white balance or when the camera is moved frequently in and out of places under different lighting conditions.

Setting procedure

The FAW function can be activated with item "FAW" on the OPERATION Menu.
This item allows allocation of the FAW function to the A, B or PRST position of the WHT.BAL selector switch.
☞ See "OPERATION Screen" on page 73.

CAUTION:

The FAW (Full-time Auto White balance) function cannot provide optimum white balance with a subject outside the FAW adjustment range, for example when it contains only a single color or not enough white color.

13-2 IRIS (Brightness) Adjustment

ADJUSTMENT OF LENS IRIS

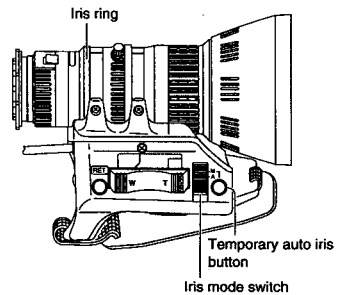

The lens iris can be adjusted using any of the following three methods.

- **Automatic adjustment**
  Set the iris mode switch to **"A"** (Auto).
  The iris is adjusted automatically according to the brightness of the object.
- **Manual adjustment**
  Set the iris mode switch to **"M"** (Manual).
  The iris can be adjusted manually by rotating the iris ring.
- **Temporary auto iris adjustment**
  During manual iris adjustment, the auto iris adjustment mode is activated only while this button is held depressed.

■ Changing the auto iris adjustment setup

Under special lighting conditions such as backlight, it is often appropriate to change the value set by the auto iris adjustment.
This can be done by the following methods.
- Setting the AUTO IRIS LEVEL switch of the camera
☞ See "SWITCH FUNCTIONS" on page 83.

ZEBRA PATTERN DISPLAY DURING MANUAL ADJUSTMENT

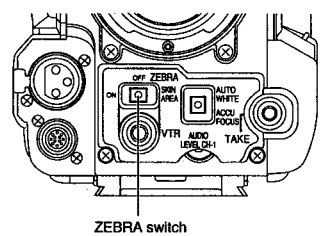

By setting the ZEBRA switch to **ON**, oblique stripes (zebra pattern) can be displayed in the sections with a luminance level of 70% to 80% or sections with levels over 100% in the viewfinder.
The zebra pattern can be used as a reference for manual iris adjustment.
When adjusting the iris manually, adjust it so that the zebra patterns are displayed in the section that you want to stress in the subject.

- The initial setting is 70 to 80%. However, using the "ZEBRA" setting on the VF DISPLAY MENU, zebra patterns can be displayed in the sections with a luminance level of 85 to 95%, over 95% and over 100%.

☞ See "VF DISPLAY MENU Screen" on page 72.

13-3 Shooting the Screen Image on a Computer Monitor

Video monitor

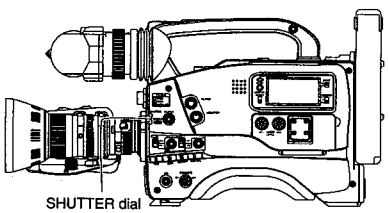

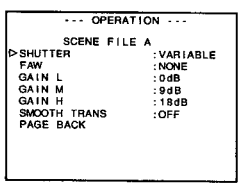

OPERATION MENU screen

■ Outline

The following operation allows the alignment of the shutter speed of the camera with the variable scanning rate of a computer monitor or display.
When a computer monitor screen or display is shot with the camera, a bright horizontal line indicating excessive exposure is displayed in cases when the scanning rate of the monitor is faster than the shutter speed of the camera. A dark horizontal line indicating insufficient exposure is displayed in cases when the monitor's scanning rate is slower than the camera's shutter speed.
The scanning frequency of a monitor varies due to various reasons during the computer operation. Adjust the scanning rate to obtain a stable image while observing the image in the viewfinder.

■ Variable Scan [V.SCAN]

- **Basic operation**
  Set the SHUTTER item on the OPERATION MENU screen to VARIABLE. Then move the SHUTTER knob upwards or downwards to change the shutter speed.
  (The speed is displayed on the viewfinder screen.)
- **Compatible frequencies**
  The variable scan function is compatible with scanning frequencies in the following range.
  60.1 to 2084.6 Hz (U-ver.)
  50.1 to 2067.8 Hz (E-ver.)

CAUTION:
This function is not compatible with slow-speed computer monitors with a vertical scanning speed of 60 Hz (U-ver.)/ 50 Hz (E-ver.).

13-4 Gain (Sensitivity) Adjustment

The gain should be switched when the brightness is insufficient due to poor lighting conditions.

GAIN SWITCHING

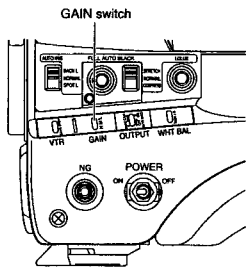

This switch allows the gain to be boosted when the illumination of the subject is insufficient.

Switch Position	Factory-Set Gain
L	0dB
M	9dB
H	18dB

When the GAIN switch is switched, the newly set gain is displayed for about 2 seconds on the Status 0 or Status 1 screen in the viewfinder.
Set it to L (0 dB) in normal use.

- The gain set for each of the switch positions can be changed with "GAIN" on the OPERATION MENU screen.
- It is also possible to use the ALC function that varies the gain automatically.
  ☞ See page 73 for details.
- To make the gain transition smoother, set "SMOOTH TRANS" on the OPERATION MENU to "ON".
  ☞ See page 73.
  However, note that the SMOOTH TRANS function is not available if gain is set to ALC.

CAUTION:
When gain is set to "ALC", gain is boosted automatically as the illumination becomes darker. However, noise will increase a little because the screen becomes brighter as the ALC (Auto Level Control) function boosts the gain more than in the case of manual adjustment.

GAIN BOOST UNDER LOLUX CONDITION

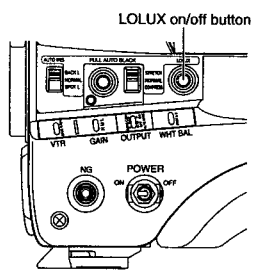

The LOLUX button is used when the illumination is still insufficient after compensating with the GAIN switch.
Press the button to enter the LOLUX mode in which the gain is boosted by about 33 dB.
"LOLUX ON" is displayed for about 2 seconds on the Status 0 or Status 1 mode screen in the viewfinder.
Pressing the button again cancels the LOLUX mode.
"LOLUX OFF" is displayed for about 2 seconds.

- When the LOLUX function is in use, the image definition on the screen will degrade to increase residual images, but this is not a malfunction.

[Relationship between gain, iris and shutter]

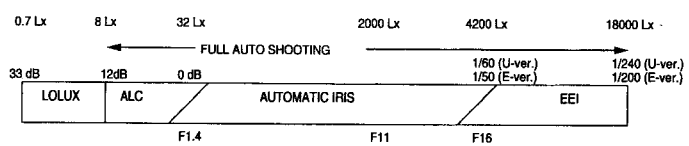

13-5 Switch Setup According to Illumination and Subject

Various switch settings are performed to accommodate the conditions of the illumination and the subject when shooting.

SWITCH FUNCTIONS

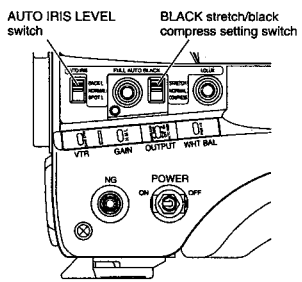

①AUTO IRIS LEVEL switch

This switch allows the reference value for the auto iris adjustment to be changed according to the lighting condition.

BACK. L : When the subject is in backlit conditions.
Sets the Auto Iris reference value to a value that is about 1 step wider than the standard setting.

NORMAL: Normal lighting condition.

SPOT. L : When the subject is under a spotlight.
Sets the Auto Iris reference value to a value that is about 1 step narrower than the standard setting.

②BLACK stretch/black compress switch

This switch makes the image easier to see by varying the black gain.

BLACK STRETCH : Boosts the gain of black areas to improve the reproducibility of black.

NORMAL : Normal black gain.

BLACK COMPRESS : Attenuates the gain of black areas to make the image sharper.

FULL AUTO SHOOTING (FAS) FUNCTION

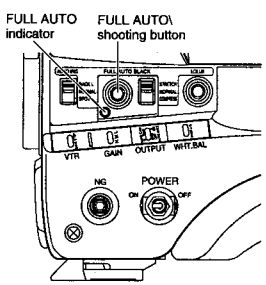

The FAS function provides a wide range of compatibility with shooting conditions that varies as you move between indoors and outdoors or between bright and dark locations. It eliminates the need to change the switch and filter positions every time you move.
The FAS function provides an integrated control of the ALC (Automatic Level Control), Auto iris and FAW (Full-time Auto White balance) functions.

Operation

1. Simply press the FULL AUTO button to enter the FAS mode, in which the FULL AUTO indicator lights and "FAS" is displayed to the right in the viewfinder.
2. Pressing the FULL AUTO button again cancels the FAS mode and turns the FULL AUTO indicator off.

■ Automatic Setting Contents

- If you have been displaying the color bars, the screen is switched automatically to the camera image.
- The auto iris adjustment mode is entered even if the iris mode switch of the lens is set to manual.
- The GAIN switch and WHT.BAL switch settings are defeated in the FAS mode.
- The LOLUX button setting is active even in the FAS mode. However, the ALC and EEI are defeated in the LOLUX mode, in which only the auto iris adjustment and FAW are used.
- All of the previous setting contents are recalled when the FAS mode is cancelled.
- The SMOOTH TRANS function is defeated during switch to the FAS function.

CAUTION:
- When the power is turned on while the camera is in the FAS mode, it takes about 10 seconds before the automatic adjustment of FAS is completed.
- In the FAS mode, the audio recording level is not set automatically to the AUTO mode.
  To select the AUTO mode, set the AUTO/MANUAL switch of the VCR section to AUTO.

13-6 How to Use Skin Detail

The contour emphasis in the skin color areas of the video signal can be controlled and made to appear gentle and smooth.

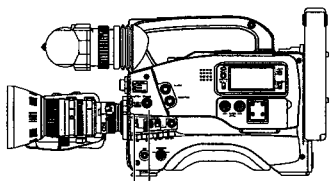

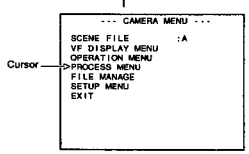

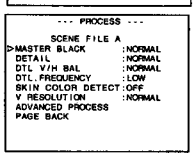

PROCESS screen

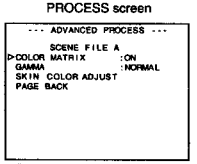

ADVANCED PROCESS screen

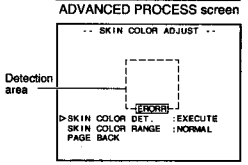

SKIN COLOR ADJUST screen

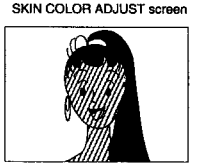

SKIN COLOR ADJUST screen

■ Setting the Color and Range of the Skin Detail Function

1. Press the STATUS button for about 1 second to display the CAMERA MENU screen.
2. Turn the SHUTTER dial downward to align the cursor (>) with the PROCESS item. Then press the SHUTTER dial in the direction of the arrow to display the PROCESS screen.
3. Turn the SHUTTER dial downward to align the cursor (>) with the ADVANCED PROCESS item. Then press the SHUTTER dial in the direction of the arrow to display the ADVANCED PROCESS screen.
4. Turn the SHUTTER dial downward to align the cursor (>) with the SKIN COLOR ADJUST item. Then press the SHUTTER dial in the direction of the arrow to display the SKIN COLOR ADJUST screen.
   - The frame shown on the screen indicates the detection area of the skin detail function.
5. When the cursor (>) is aligned with the SKIN COLOR DET. item, the SHUTTER dial is pressed in the direction of the arrow and EXECUTE selected, the skin color detection mode is activated.
6. Shoot so that the area with the color that you want to detect is brought within the detection area frame. To decide on the color for the detection, press the SHUTTER dial to set SKIN COLOR DET. to STOP.
   - The areas recognized by the skin detail function appear with superimposed zebra patterns.
   - If the color is not recognized as a color that the skin detail function works with, "ERROR" is displayed on the screen.
7. If you want to change the color range recognized by the skin detail function, perform the following operations.
   Set the SKIN COLOR DET. item to EXECUTE.
   ① Turn the SHUTTER dial to align the cursor (>) with SKIN COLOR RANGE, and then press the SHUTTER dial in the direction of the arrow.
   ➡ The area with the setting value starts blinking, and the value can now be changed.
   ② Turn the SHUTTER dial up or down to widen or narrow the color range.
   • Adjust the range while observing the zebra patterns.
   ③ To decide the color range, press the SHUTTER dial in the direction of the arrow.
   ➡ The setting value stops blinking but remains lit.
8. To stop the SKIN COLOR ADJUST operation, align the cursor (>) with BACK PAGE and press the SHUTTER dial in the direction of the arrow.

13-6 How to Use Skin Detail (Cont'd)

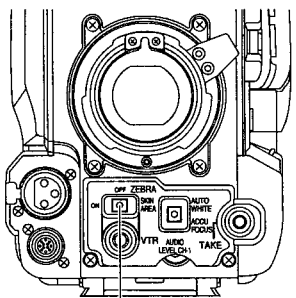

ZEBRA switch

■ Confirming the color tone area adjusted with the Skin Detail function

When the ZEBRA switch on the front section is pressed to the "SKIN AREA" side, the color tone areas adjusted with Skin Detail are displayed in the viewfinder.

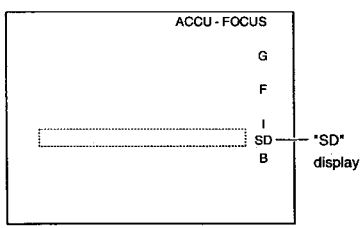

STATUS 0

■ Using the Skin Detail Function

To use the skin detail function set on the SKIN COLOR ADJUST screen, set the SKIN DTL DETECT item on the PROCESS menu to "ON".

While the Skin Detail function operates, the "SD" indicator is displayed on the Status 0 and Status 1 screen in the viewfinder.

For servicing
See the service manual page 2-7 "2.4.3 Cleaning".

14. OTHERS

14-1 Troubleshooting

Warnings concerning problems with the unit are provide in the form of indicators, display indications and monitor tones.
The warnings are of the following two types.
- Alarm indications : These indications are given to provide warning on the status of the unit, for example when the tape or battery pack should be replaced.
- Error code display : In case an error occurs during operation, the unit self-diagnoses the cause and shows the diagnostics results on the counter display. When this happens, the unit stops operation automatically or ejects the videocassette.

ALARM INDICATIONS

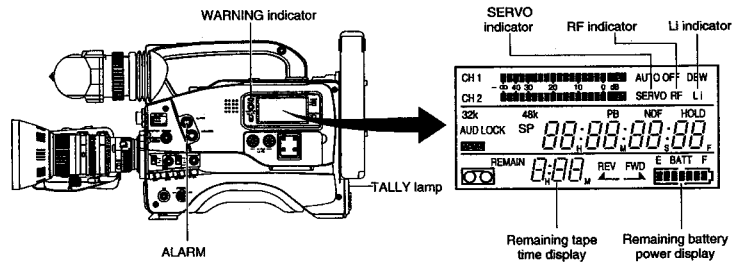

When an alarm is indicated, the unit operates in the following ways.

Alarm Indicator on VCR Display	Symptom	VCR Operation and Remedy
DEW	Indicates dew formation (condensation).	Operation : The VTR rejects operation. Remedy : Leave the power on, and wait until the indication disappears.
SERVO (Counter display) "SYnc inh"	Lights in the case of troubles with the drum servo during recording. Lights when the input sync signal is disturbed or the unit is subjected to physical shock. (Displayed only in record mode)	Operation : During recording the mode becomes the stop mode. During playback, playback of the disturbed video image continues. Remedy : • Also check the input sync signal. • Signal is disturbed when the unit is subject to a violent shock. In other cases, please consult the person in charge of professional video equipment at your nearest JVC-authorized service agent.
RF (Counter display) "HEAd CLoG"	Lights in case of video head clogging. (Head clogging is detected and indicated during playback and recording check using the RET button on the lens section.)	Operation : Continues. Remedy : Clean the head with the special head cleaning tape. (See page 7 and the separate sheet "Precautions for Use of Head Cleaning Tape".)
(Counter display) Pc TAPE	Improper cassette type	Operation : Operation stops. Remedy : Use recordable MiniDV cassette for recording video and audio.
Li	Lights when the lithium battery for backup of time code generator and date/time data is exhausted.	Operation : Continues. Remedy : Replace with a new lithium battery. See page 34.
Remaining tape time REMAIN 0:02	* About 2 minutes before tape end. (The TALLY lamp and alarm sound are activated only in the record mode.)	Operation : Continues.
	* When the tape has ended completely.	Operation : Stops.
Remaining battery power E BATT	When the remaining battery capacity is low.	Operation : Continues. Remedy : Replace battery pack early.
E BATT	When the battery capacity drops to an insufficient level.	Operation : Stops automatically. The camera may generate abnormal signals. This is not a malfunction.

14-1 Troubleshooting (Cont'd)

Alarm Indications (Cont'd)

Depending on the alarm conditions, the warning indicators in the LCD display, the WARNING indicator, the TALLY lamp, alarm tones and the viewfinder appear as shown in the following table.

Alarm Indications				Viewfinder		
LCD Display	WARNING Indicator	TALLY Lamp	Alarm Tone	WARNING Lamp: REC Lamp	WARNING Lamp: BATT. Lamp	On Screen Display
"DEW" indicator	⊛	⊛	⊛	⊛	—	VTR WARNING (DEW)
"SERVO" indicator "SYnc inh" indicator	⊛	⊛	⊛	⊛	—	VTR WARNING (SERVO)
"RF" indicator "HEAd CLoG" indicator	⊛ (Only during the interval from when the VTR trigger button is pressed and until recording starts.)	⊛	⊛	⊛	—	VTR WARNING (HEAD)
"Li" indicator	—	—	—	—	—	—
Remaining tape time	◑	◑ (In record mode only)	▬	◑	—	TAPE NEAR END About 2 min. before tape end.
	●	⊛	⊛	⊛	—	TAPE END
Remaining battery power E BATT	◑	◑ (Except for play /search mode)	▬	◑	●	LOW BATTERY
E BATT	●	⊛	⊛	⊛	●	LOW BATTERY

The WARNING indicator normally lights green or orange to indicate that operation is possible.
The color changes to red to indicate an alarm and appears as described above.
The alarm tone output is superimposed on the audio signal output from the monitoring loudspeaker or EARPHONE jack.
The volume of the alarm tone can be adjusted with the ALARM volume control.

Display symbols

● : Steady lighting. ◑ : Blinking once per second. ⊛ : Blinking 4 times per second.
▬ : Continuous sound. ▬ ▬ : Sound interrupted once per second. ▮▮▮▮ : Sound interrupted 4 times per second.

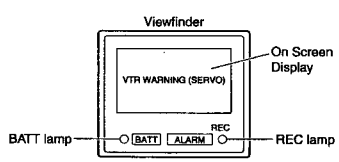

14-1 Troubleshooting (Cont'd)

WARNINGS IN VIEWFINDER

Viewfinder Warning Lamps

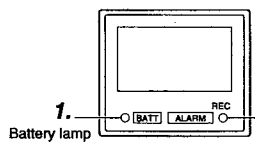

1. BATTERY lamp
This red lamp lights under the following circumstance.
Lights red : • When the battery voltage becomes too low for the camera to operate.

2. REC/ALARM lamp
This lamp lights or blinks green under the following conditions.
Lights Green : • While recording
Blinks Green : • During the interval where the unit switches from record-pause to record mode.
• Immediately before the tape runs out or has run out.
• If the unit malfunctions.

■ Character display warnings:

LOW BATTERY : This blinks when the battery level becomes too low.
TAPE NEAR END: Less than 3 minutes tape remaining.
TAPE END : The tape has run out.

■ Function Failures

When an abnormality occurs in the unit or an improper operation is performed, one of the following warning messages will appear in the viewfinder.

- **VTR WARNING (HEAD):**
  Lights in case of video head clogging.
  (Head clogging is detected and indicated during playback and recording check using the RET button on the lens section.)
- **VTR WARNING (SERVO):**
  Lights in the case of drum servo trouble during recording.
- **VTR WARNING (DEW):**
  Lights when condensation occurs in the unit.
- **VTR WARNING (STOP):**
  Lights in case the unit stops operating.
- **VTR WARNING (HARD):**
  Lights when abnormality occurs in the unit.
- **VTR WARNING (REW):**
  Lights when abnormality occurs with tape rewind operation.
- **CLOSE CASSETTE COVER:**
  Lights when the cassette cover has not been closed.
- **REC INHIBIT:**
  Indicated when an unrecordable videocassette (the switch on the back of the cassette is set to SAVE) is loaded.
- **NO TAPE:**
  Lights when the VTR trigger button is pressed with no videocassette loaded.

Status 0 or
Status 1 mode

■ Warnings on the White Balance Function

- **AUTO WHITE A, B NG: OBJECT** — Improper object.
  • Check whether the object being shot is white enough.
  • Check that selected filter suits the illumination conditions.
- **AUTO WHITE A, B ERROR: LOW LIGHT** — Amount of incident light insufficient.
  • Check to see if it is necessary to increase illumination or perform iris adjustment.
- **AUTO WHITE A, B ERROR: OVER LIGHT** — Amount of incident light excessive.
  • Check to see if illumination and iris adjustment are appropriate.

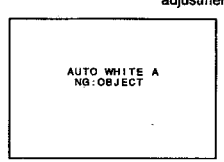

14-1 Troubleshooting (Cont'd)

In the case of troubles occurring during operation of the GY-DV500, it performs a self-test to identify the cause and displays the result in the form of an error code. The error code consists of the "main code" which indicates its contents and the "sub-code" which indicates the details. Depending on the status of the GY-DV500 at this time, indications may also appear on the LCD display, the WARNING indicator may activate and the alarm tone may be generated.
In the viewfinder, the "VTR WARNING (DEW)" indication appears when condensation is detected, and the "VTR WARNING (STOP)", "VTR WARNING (HARD)" or "VTR WARNING (REW)" indication appears depending on the contents of the error code when some of the other error codes are displayed.

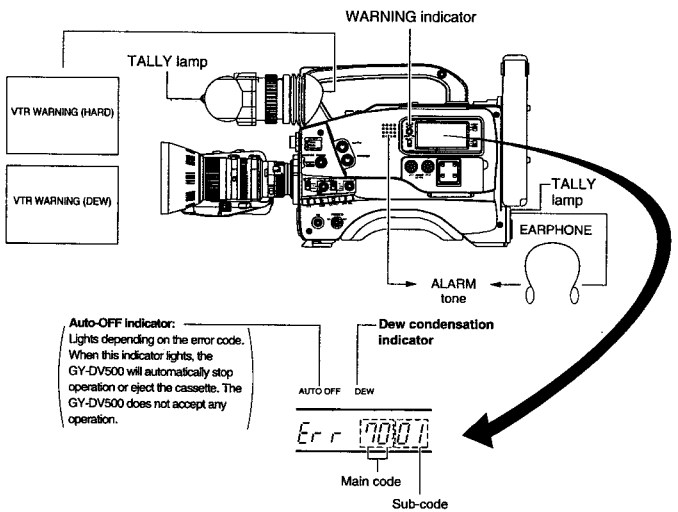

WARNING indicator	Alarm Tone	Display	GY-DV500 Operation
Red. blinking	Continuous	"Error code"	• Automatically ejects the cassette. It can be inserted again.
		"Error code" plus "AUTO OFF"	• Automatically stops operation or ejects the cassette. (Auto OFF) * The GY-DV500 does not accept any operation.
Red, blinking	Intermittent	"DEW "	• Dew condensation inside the unit. The GY-DV500 does not accept any operation until the DEW indicator disappears from the display.

* In the Auto OFF status, it is impossible to operate the GY-DV500. This condition can be cancelled by switching the POWER switch OFF and then switching it ON again. If the same problem occurs again after the power is turned ON, there may be something wrong with the GY-DV500. Please consult the person in charge of professional video equipment at your nearest JVC-authorized service agent.

The GY-DV500 is a microcomputer-controlled piece of equipment, which may malfunction due to external noise or interference. In this case, set the POWER switch to OFF, remove the lithium backup battery, and then set the POWER switch to ON again after a few minutes.

For servicing
See the service manual page 1-22 "1.16 WARNING CODES".

14-1 Troubleshooting (Cont'd)

TROUBLES WITH ERROR CODE OUTPUTS

Error Code	Error Details	GY-DV500 Operation	Remedy
3200	Tape loading impossible.	Operation stops. All operations are rejected.	Switch the power OFF and then switch it back ON. However, the tape may be damaged depending on the situation. Please consult the person in charge of professional video equipment at your nearest JVC-authorized service agent.
3300	Tape unloading impossible.	Operation stops. All operations are rejected.	
4000	Irregular cassette intake operation.	Operation stops. All operations are rejected.	
4100	Irregular eject operation.	Operation stops. All operations are rejected.	
4200	Cassette housing abnormality.	Operation stops. All operations are rejected.	
5605	Tape is cut.	Operation stops. All operations are rejected.	Open the cassette cover by using the EJECT switch and then switch the power ON again.
5606 to 5607	Tape is slack.	Operation stops. All operations are rejected.	Switch the power OFF and then switch it back ON. However, the tape may be damaged depending on the situation. Please consult the person in charge of professional video equipment at your nearest JVC-authorized service agent.
5702	Tape end sensor error.	Operation stops. All operations are rejected.	
5802	Tape beginning sensor error.	Operation stops. All operations are rejected.	
7001	Drum rotation stopped.	Operation stops. All operations are rejected.	Switch the power OFF and then switch it back ON. However, the tape may be damaged depending on the situation. Please consult the person in charge of professional video equipment at your nearest JVC-authorized service agent.
7101	Capstan rotation stopped.	Operation stops. All operations are rejected.	
7202 to 7203	Supply reel rotation error.	Operation stops. All operations are rejected.	
7302 to 7303	Take up reel rotation error.	Operation stops. All operations are rejected.	
7305	Irregular tape winding when unloading.	Operation stops. All operations are rejected.	

14-1 Troubleshooting (Cont'd)

TROUBLES WITHOUT ERROR CODE OUTPUTS

Symptoms	Remedy
Power cannot be switched ON.	• Is power supply connected properly? • Is battery pack recharged? • When the lithium battery is depleted, it may not be possible to turn on the power. • Was the power turned ON immediately after being turned OFF? Wait at least 5 seconds before turning the power ON again once it has been turned OFF.
Operation buttons on the GY-DV500 don't work.	• Is the cassette cover open? The GY-DV500 remains inoperative as long as the cassette door is open.
Recording is not possible.	• Is switch on cassette set to REC? If it is set to SAVE, set it to REC. • When not connected via the DV connector, is the VCR Setup Menu item No. 126 INPUT SELECT set to "IEEE1394"? If so, set to "CAMERA".
Even if the image appears in the viewfinder, the signal is not output to the MONITOR OUT or YC OUT connectors. (U-ver. only)	• When not connected via the DV connector, is the VCR Setup Menu item No. 126 INPUT SELECT set to "IEEE1394"? If so, set to "CAMERA".
Noise interferes with playback video.	• Video head may be clogged with dirt. Clean head with the special head cleaning tape. (See page 7 and the separate sheet "Precautions for Use of Head Cleaning Tape".)
Sound and picture are disturbed during playback.	• Is the sync signal input to the SYNC IN connector disturbed? If so, check and remedy the input sync signal.
Time code data is not shown as on-screen-display.	• Time code data is not shown as on-screen-display during recording or playback. The data is shown only on the counter display.
Time code and user's bit data are not shown on the counter display.	• Is the COUNTER switch set to "CTL"? If so, set the switch to "TC" or "UB".
Remaining battery power display is incorrect.	• The VCR Setup Menu item No. 396 BATTERY TYPE may not be set correctly in accordance with the type of battery in use. If the menu item setting is incorrect, set it correctly using the VCR setup menu item BATTERY TYPE. • Is the battery old?
Battery alarm is displayed and the GY-DV500 enters the non-operating mode even when a fully charged battery is used.	
Cassette cannot be ejected after the power is turned ON.	• The capacity of the power supply may be insufficient. Check the power voltage.
Viewfinder image looks dark or unclear.	• Adjust the viewfinder's contrast and bright controls. • Is the filter turret set to 5600K+ND? • Is the iris closed? • Is the shutter speed too fast? • Is the viewfinder cable correctly connected?
Noise appears when playing back a tape recorded on another unit.	• When a tape recorded on another unit is played back or used for recording, this phenomenon may occur due to tracking errors.
The transient section between scenes recorded on other units and those recorded on this unit may appear disturbed.	
The front section's recording level control doesn't work.	• Is the VCR Setup Menu item No. 246 FRONT VOLUME ENABLE set to "DISABLE". If so, set to "ENABLE".
The front section's recording level control doesn't change the recording level of the sound input to CH2.	• The front section's recording level control cannot be used to change the recording level of the sound input to CH2. Use the side section's CH2 recording level control for this purpose.
Recording operation stopped.	• Is the SERVO indicator or "SYNC INH" displayed on the counter display? If so, check the input sync signal.

For servicing

See the service manual page 2-7 "2.4.3 Cleaning".

14-2 Hour Meter Display

The unit can display the accumulated running time of the head drum as hour meter data on the counter display. The hour meter can be displayed by selecting HM (HOUR METER) on the VCR Setup Menu. Use this as a guide for periodical maintenance.

☞ See page 7.

Note:

The hour meter is not shown correctly when no videocassette is inserted.

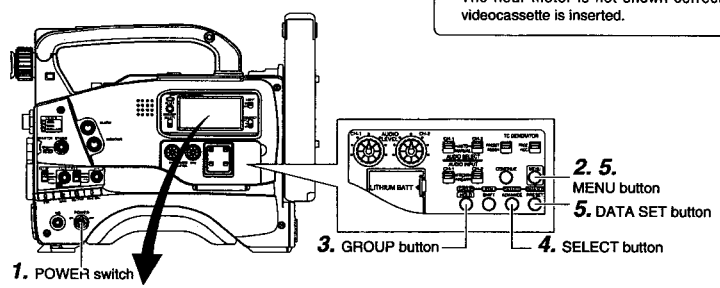

Counter display

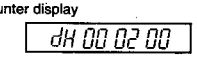

Accumulated drum running time: 200 hrs.

Viewfinder

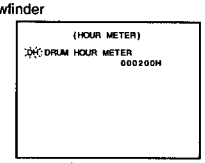

1. Set the POWER switch to ON.

2. Press the MENU button to display the VCR Setup Menu. "MENU" lights in the display, and the VCR Setup Menu's group menu appears in the viewfinder and on the counter display.

3. Press the GROUP button and choose "HM: HOUR METER".
- "HM HOUR METER" is shown blinking in the viewfinder. The counter display shows "Hour".

4. Press the SELECT button.
The accumulated running time of the head drum is indicated in the viewfinder and on the counter display.

5. To return to the normal mode, press the DATA SET button.
- Pressing the MENU button returns you to the group menu.

14-3 Specifications

■ CAMERA SECTION

Image pickup devices: 1/2-inch interline CCD x 3
Color separation optical system:
F1.4 3-color separation prism
Number of effective pixels:
380,000 pixels ((H) 768 x (V) 494) : U-ver.
440,000 pixels ((H) 752 x (V) 582) : E-ver.
Color system : NTSC (R-Y, B-Y encoder)
PAL (R-Y, B-Y encoder)
Color bars : SMPTE color bar : U-Ver.
EBU color bar : E-Ver.
Sync system : Internal sync (built-in SSG)
External sync (VBS or BB)
Lens mount : Bayonet system
(compatible with 1/2-inch lenses)
Optical filter : 3200 K, 5600 K, 5600 K + ND (1/64)
Sensitivity : F11, 2000 lx
Minimum illumination: 0.75 lx (F1.4, LOLUX mode)
Gain : -3, 0, 6, 9, 12, 18 dB, ALC, LOLUX,
Shutter speed : 1/100, 1/250, 1/500, 1/1000, 1/2000 : U-ver.
1/120, 1/250, 1/500, 1/1000, 1/2000 : E-ver.
V.SCAN speed : 60.1 Hz to 2084.6 Hz : U-ver.
50.1 Hz to 2067.8 Hz : E-ver.
Registration : 0.05% or less (excluding lens distortion)
Contour correction : Horizontal: dual-edged. Vertical: 2 H

■ VCR SECTION

Format : Mini DV (SP mode only)
Tape speed : 18.812 mm/s : U-ver.
18.831 mm/s : E-ver.
Record/Play time : 60 minutes
(With M-DV60ME cassette)
F.F/Rewind time : Approx. 3 minutes 30 seconds
(With M-DV60ME cassette)

[VIDEO]
Recording format : 8-bit, 13.5 MHz, 4:1:1 component recording : U-ver.
8-bit, 13.5 MHz, 4:2:0 component recording : E-ver.

[AUDIO]
Recording format : 16-bit, 48 kHz, 2-channel PCM audio/12-bit, 32 kHz 2-channel PCM audio
Frequency response : 20 Hz to 20 kHz (48 kHz mode)
Wow & flutter : Below measurable limit

[Time Code System]
Time code signal : Compliance with SMPTE standard : U-ver.
Compliance with EBU standard : E-ver.

■ INPUT/OUTPUT SIGNALS

Video signal output : 1 V (p-p), 75 ohms (BNC) unbalanced composite output.
YC output : Y 1 V (p-p) 75 ohms unbalance
C 0.286 V (p-p) for U-ver. or 0.3 V (p-p) for E-ver. 75 ohms unbalance (4-pin)
Lens : 12-pin connector
Audio input : Microphone -60dBs, 3 kohm balanced (XLR-3)
Line +4dBs, 10 kohm balanced (XLR-3)
Audio output : -6 dBs, low impedance, unbalanced
Earphone output : -60 dBs to -17 dBs, at 8-ohm load (Monaural mini jack)
DC input : 12V DC (11 to 15 V DC) (XLR-4)
Auxiliary power output: 12 V DC, max. 0.1A (11 to 15 V DC) (4-pin)
DV connector : 4-pin
RS-232C : Mini DIN 6-pin

■ GENERAL

Power consumption : 18W with VF-P115B (when recording)
Mass : Approx. 5.0 kg (with lens, viewfinder, battery, videocassette). Approximately 2.9 kg (main unit only)
Operating temperatures: 0 °C to 40 °C (32°F to 104°F)
Operating humidity : 30 % RH to 80 % RH
Storage temperatures: -20 °C to 60 °C (–4°F to 140°F)

■ ACCESSORIES

Microphone : x 1
Tripod base : x 1
Lithium battery : x 1 (CR2032)
Head cleaning tape : x 1
Instruction Manual : x 1
Precautions for Use of Head Cleaning Tape : x 1

Design and specifications are subject to change without notice.

14-3 Specifications (Cont'd)

OPTIONAL ACCESSORIES

Viewfinder : VF-P115B, VF-P116
Power zoom lens : S14 x 7.3B12, S16 x 6.7B12, S19 x 6.5B12 (FUJINON)
YH14 x 7.3K12, YH18 x 6.7K12 (CANON)
AC power adapter : AA-P250
Microphone : MV-P615
Microphone holder : KA-A50

EXTERNAL DIMENSIONS (unit: mm)

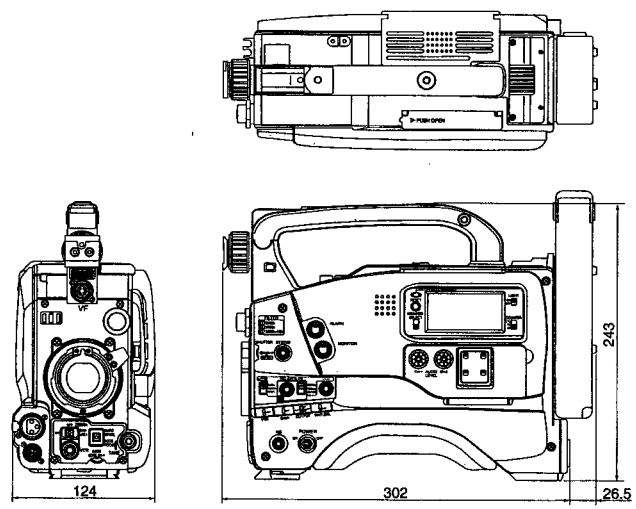

* Design and specifications are subject to change without notice.

SECTION 1
SERVICE CAUTIONS AND DISASSEMBLY

1.1 RESETTING THE POWER CIRCUIT PROTECTION BREAKER

This unit employs a power circuit protection breaker in place of a fuse to disconnect from the main power and to thus protect the internal circuitry from damage caused by any current overload. The power can be re-connected by resetting the breaker.

> To prevent any complications resulting from the failure, check the cause of the shutdown and repair it before resetting the circuit breaker.

(1) Switch OFF the POWER of this unit as well as that of any equipment supplying power to it.
(2) The circuit breaker Ⓐ is located below the VCR at the rear. Press the BREAK button to re-connect the power line.

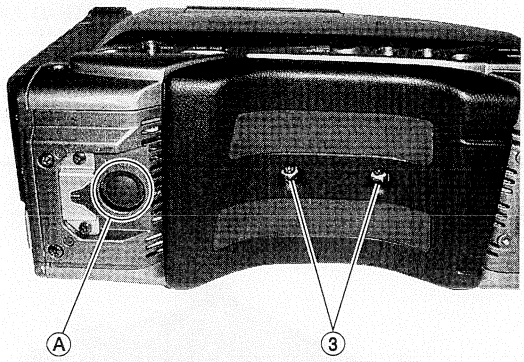

Fig. 1-1 Position of the Circuit Breaker

1.2 REMOVING THE EXTERIOR COVERS

1.2.1 Removing the Left Side Cover

(1) Open the cassette door by pressing the EJECT switch.
(2) Loosen the 4 screws ① and remove the left side cover.

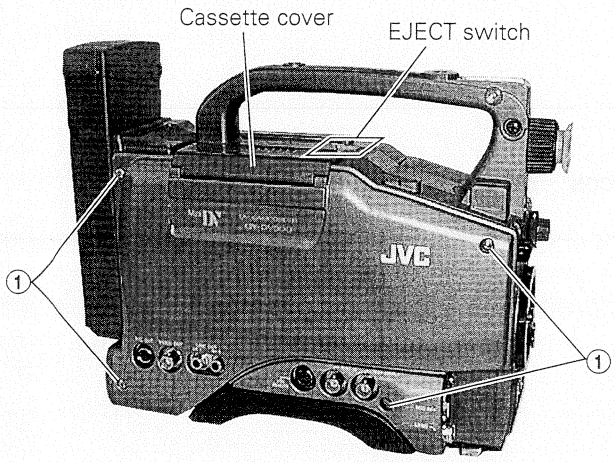

Fig. 1-2-1 Removing the Left Side Cover

1.2.2 Opening the Right Side Cover

(1) Loosen the 4 screws ②.

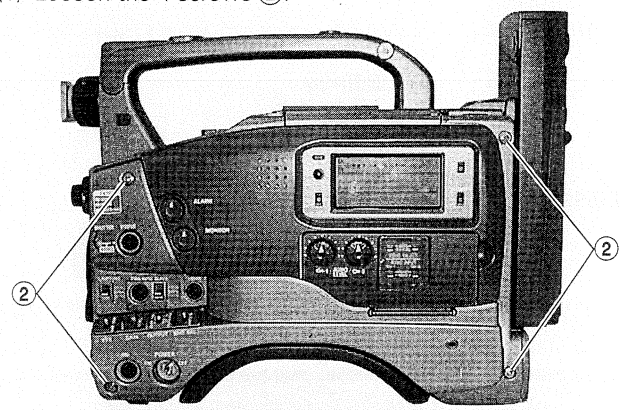

Fig. 1-2-2(1) Opening the Right Side Cover

(2) Flip open the right side cover toward the front.

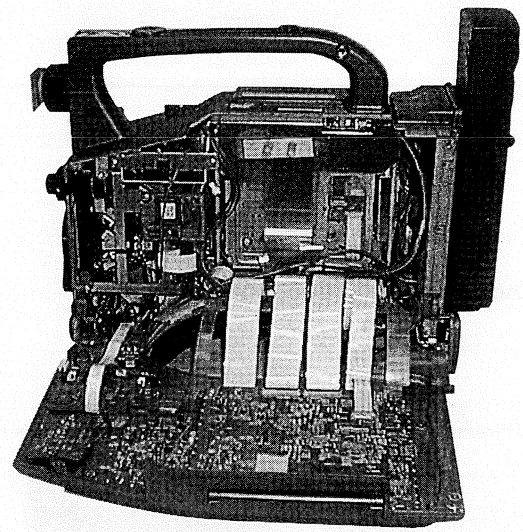

Fig. 1-2-2(2) View of the Opened Right Side Cover

1.2.3 Removing the Bottom Cover

(1) Remove the left side cover (see section 1.2.1).
(2) Remove the 2 screws ③ and remove the shoulder pads (see Fig. 1-1).
(3) Remove the 4 screws ④ and remove the bottom cover.

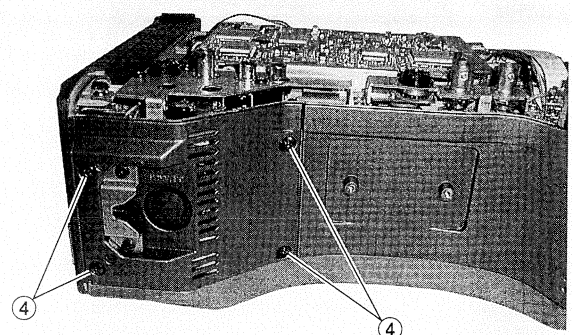

Fig. 1-2-3 Removing the Bottom Cover

1.3 LAYOUTS OF THE MAJOR BOARDS

On the side of the left-hand side cover

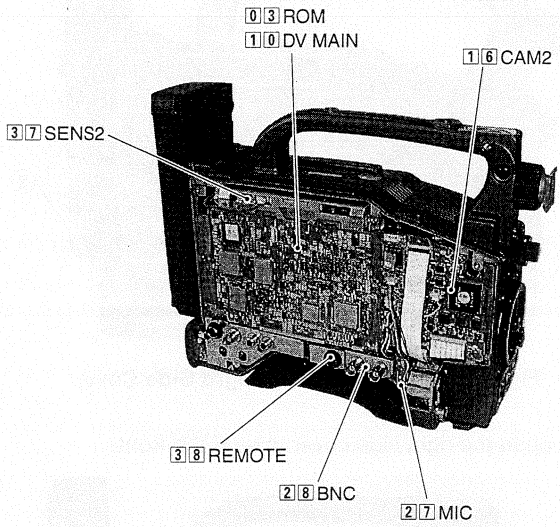

On the side of the bottom cover

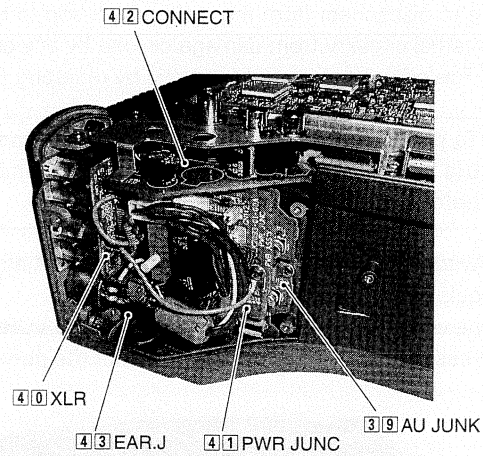

On the side of the right-hand side cover

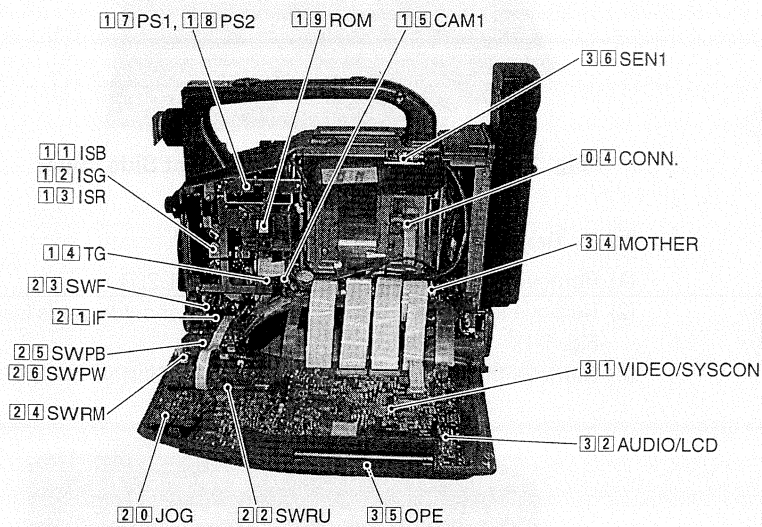

VCR section

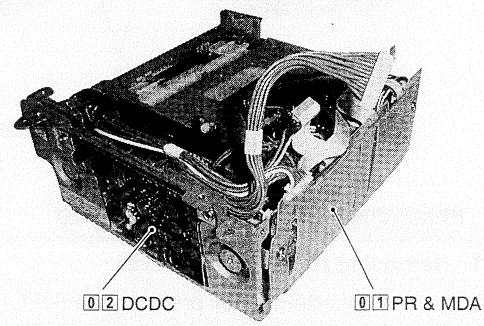

1.4 REMOVING THE OPTICAL BLOCK ASSEMBLY AND THE OPTICAL FILTER ASSEMBLY

(1) Remove the right side cover (see section 1.2.2).
(2) Remove the screw ① retaining the ROM board.

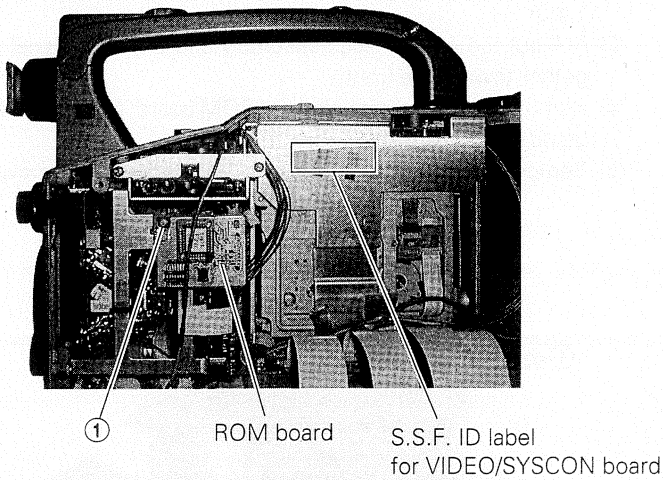

Fig. 1-4-1

(3) Remove the 4 screws ②.

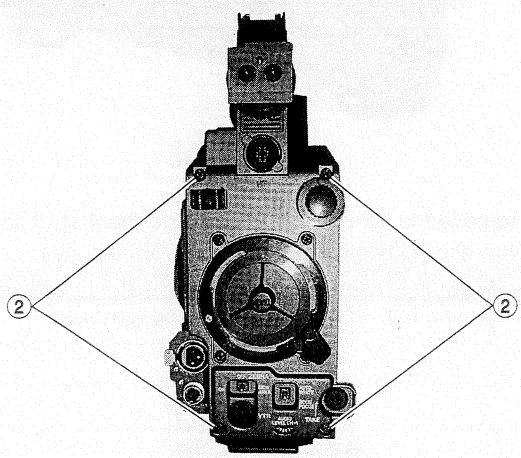

Fig. 1-4-2

(4) Pull out the optical block assembly and the front panel together toward the front.

CAUTION

Be careful not to damage the boards or the FC cables.

(5) Loosen the 2 screws ③ and remove the connector Ⓐ.
(6) Remove the optical filter assembly in the direction of the arrow.

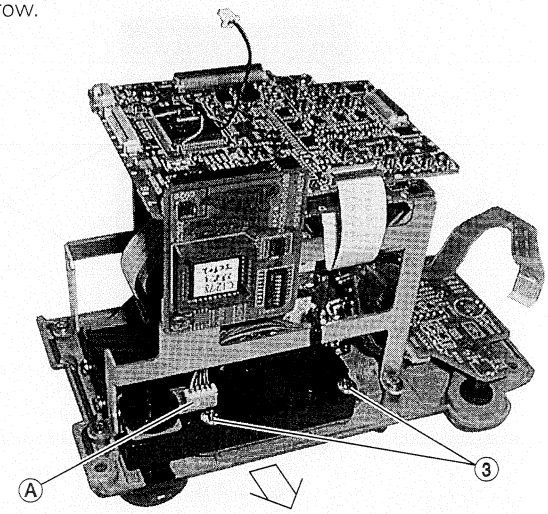

Fig. 1-4-3

(7) Remove the 4 screws ④ and remove the TG board and CP board mounting brackets.

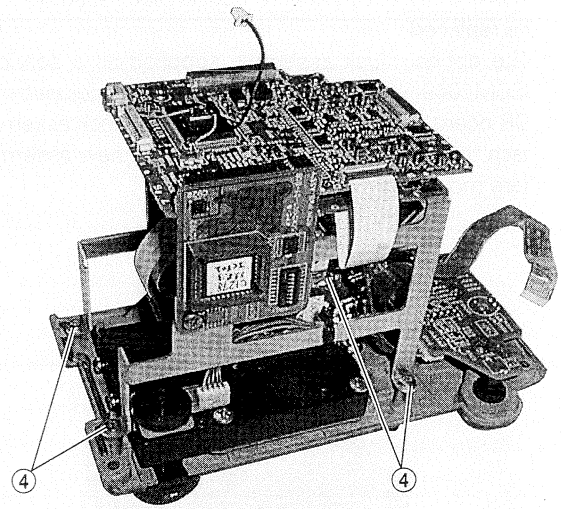

Fig. 1-4-4(1)

(8) Flip open CN11, CN12 and CN13 and unplug the flexible cables.

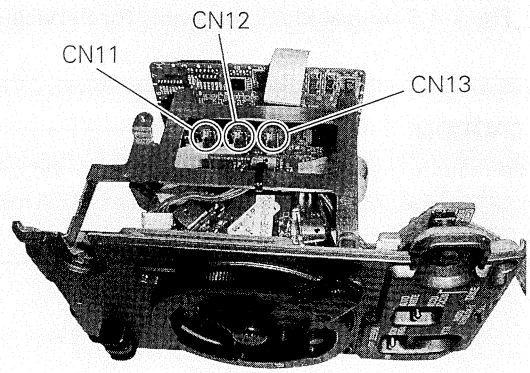

Fig. 1-4-4(2)

(9) Remove the 4 screws ⑤and separate the optical block assembly from the front panel.

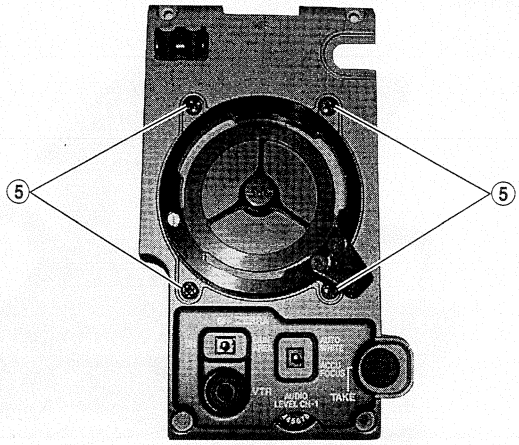

Fig. 1-4-5

NOTES

- The CCDs are bonded precisely to the prism. In case of trouble with a CCD, it is not possible to replace an individual CCD, but the entire optical block assembly should be replaced.
- The optical block assembly supplied as a service part (SCM1049-N0A (NTSC)/P0A (PAL)) is not equipped with the DR board. When replacing the optical block assembly, attach the surrounding PC boards to the new assembly before mounting it in the camera.

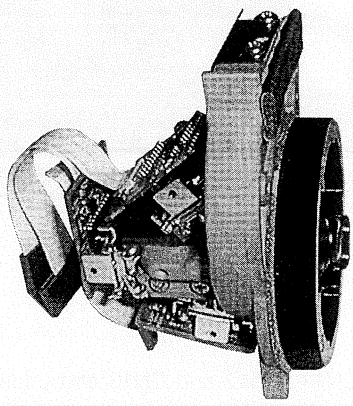

Fig. 1-4-6 Optical Block Assembly for Servicing

CAUTION

When mounting the optical block assembly in the camera, take care of the positioning of the wire assembly. A malfunction may occur if a wire is somehow caught up.

1.5 REMOVING MAJOR BOARDS FROM THE CAMERA

1.5.1 Removing the CP and TG Boards.

(1) Remove the right side cover (see section 1.2.2).
(2) Remove the 4 screws retaining the front panel (see section 1.4.3).
(3) Pull out the optical block assembly and the front panel together toward the front.
(4) Remove the screw retaining the ROM board. Now the ROM board can be removed.
(5) Remove the 4 screws ①. Now the CP board can be removed.

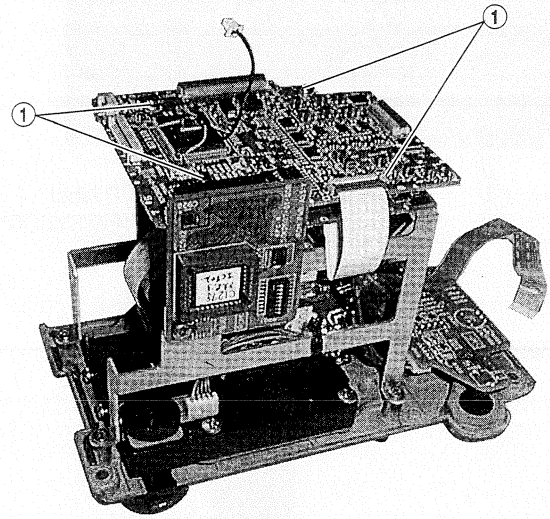

Fig. 1-5-1(1)

(6) Remove the CP board, then remove the 4 stud screws ④. Now the TG board is disengaged from the stay.
(7) Unplug the flexible cables connecting the IS boards and the TG board. Now the TG board can be removed.

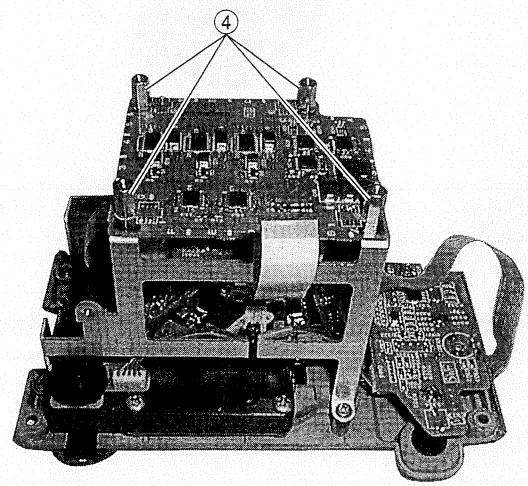

Fig. 1-5-1(2)

1.5.2 Removing the CAM1 Board

(1) Remove the left side cover (section 1.2.1).
(2) Remove the 6 screws ②.
(3) The DV MAIN board on the VCR side and the CAM2 board are connected by a board-to-board connector. Open the two boards together in the direction of the arrow.

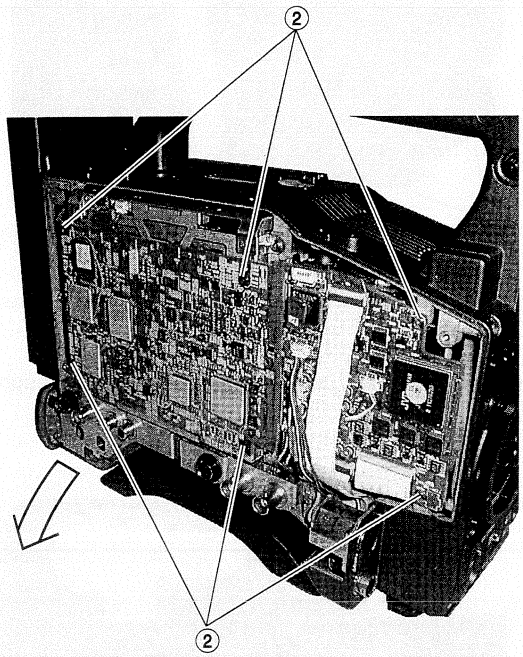

Fig. 1-5-2(1)

(4) The opened boards can be secured by fitting them into the notches on the VCR side frame as shown in the figure.

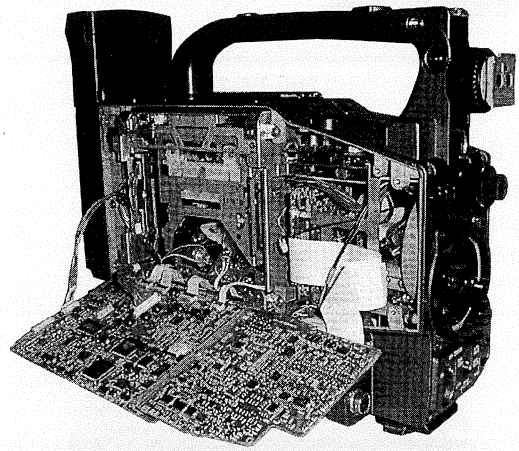

Fig. 1-5-2(2)

The operation of the VCR can be confirmed when the circuit boards are tilted.
When the circuit boards are tilted, take care that the electrical circuitry on each board is not short-circuited by the BNC connector located below the board.

1.5.3 Removing the SW Boards

(1) Open the right side cover (see section 1.2.2).
(2) The JOG, SWRU, SWRM, SWPW and SWRB boards are attached on the right side cover. Remove them as required.

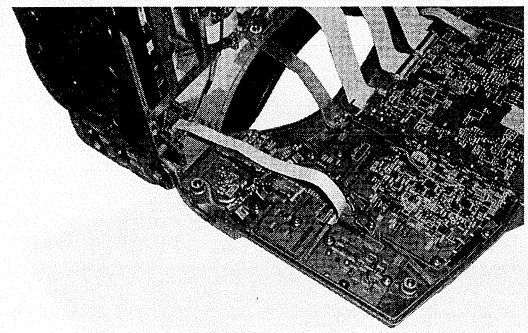

Fig. 1-5-3

1.5.4 Removing the PS 1 & 2 board.

(1) Open the right side cover (see section 1.2.2).
(2) Remove the 2 screws ③ retaining the PS 1 & 2 board.
(3) Pull out the PS 1 & 2 board, along the guide rail in the direction of the arrow.

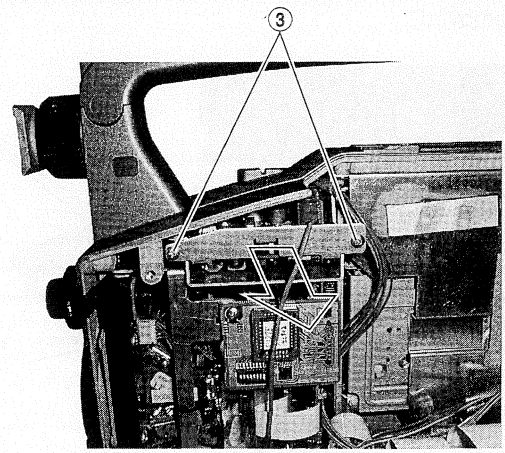

Fig. 1-5-4

1.6 REMOVING THE MAJOR BOARDS FROM THE VCR

1.6.1 Removing the VIDEO/SYSCON Board and Audio/ LCD Board

(1) Open the right side cover (see section 1.2.2).
The VIDEO/SYSCON board is clamped to the right side cover.
(2) Remove the 2 screws ①. Now the VIDEO/SYSCON board can be removed.

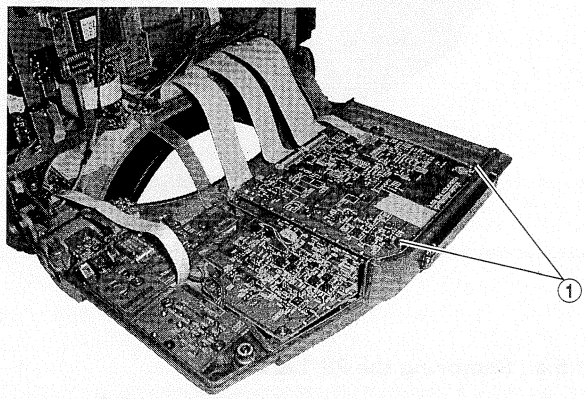

Fig. 1-6-1(1)

(3) After removing the VIDEO/SYSCON board, remove the 6 screws ② and 2 studs ③. Now the AUDIO/LCD board can be removed.

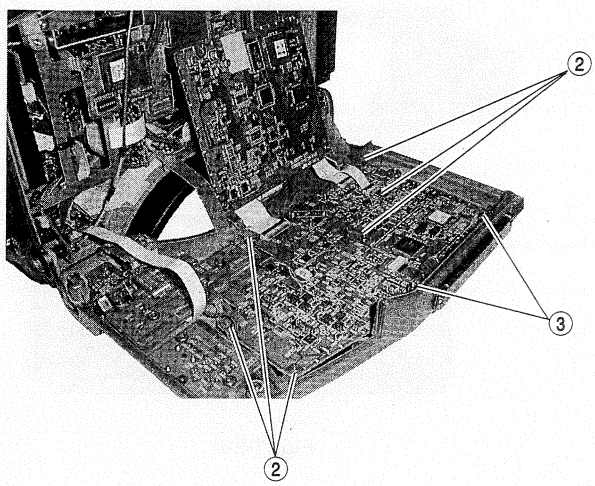

Fig. 1-6-1(2)

1.6.2 Removing the VCR Unit

(1) Remove the left side cover (see section 1.2.1).
(2) Remove the 4 screws ④.
(3) Pull out the VCR unit gently in the direction of the arrow. As the VCR unit is connected to the CAM2 board with a board-to-board connector, disconnect it gently.

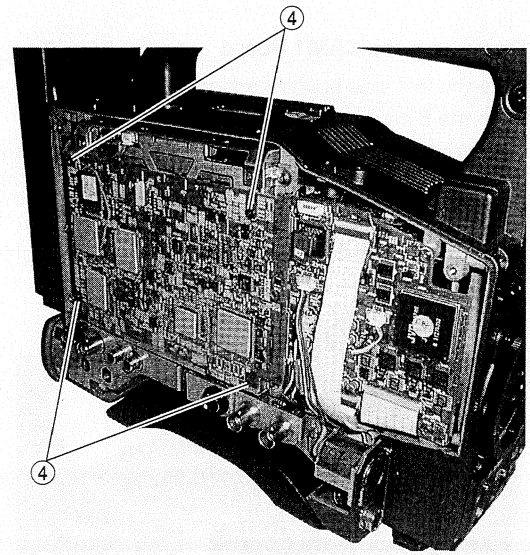

Fig. 1-6-2(1)

(4) Remove the EJECT switch wire Ⓐ and power supply wire Ⓑ.

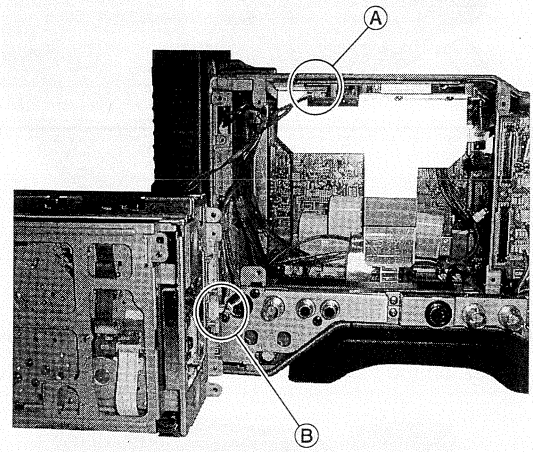

Fig. 1-6-2(2)

1.6.3 Removing the DV MAIN Board

(1) Remove the VCR unit (see section 1.6.2).
(2) Remove the 4 screws ⑤.
(3) Now the DV MAIN board can be removed.

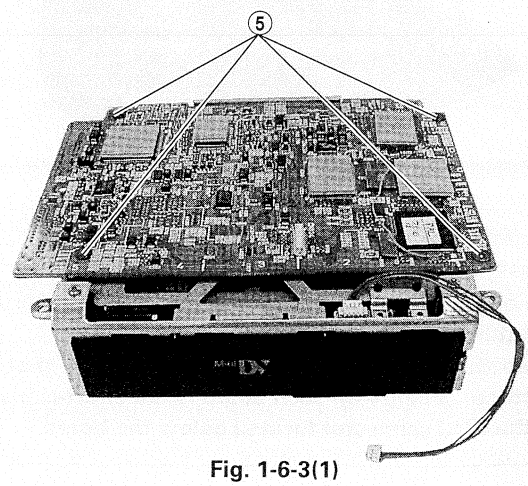

Fig. 1-6-3(1)

(4) After removing the DV MAIN board, leave it standing up by fitting it into the notches on the unit frame, as shown in the figure.

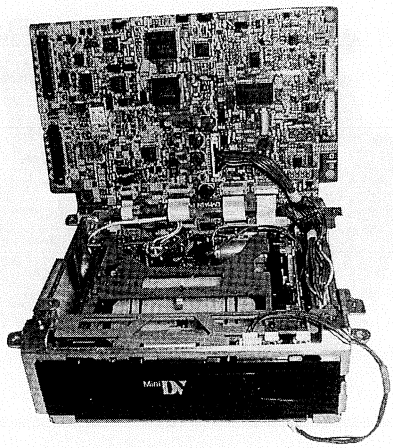

Fig. 1-6-3(2)

1.6.4 Removing the Battery Case

(1) Remove the 2 screws ① and remove the rear cover of the battery case.
(2) Remove the 4 screws ② and remove the battery case from the main unit.

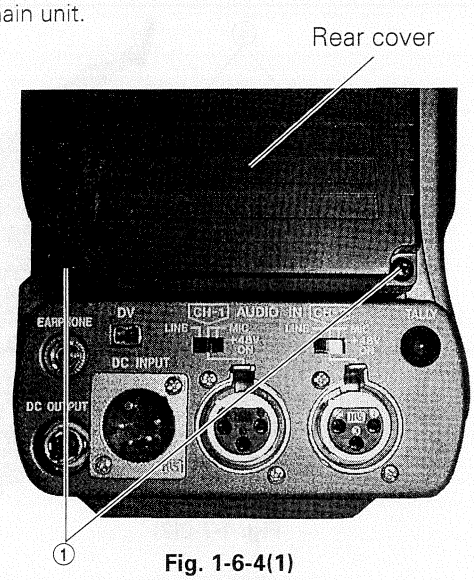

Fig. 1-6-4(1)

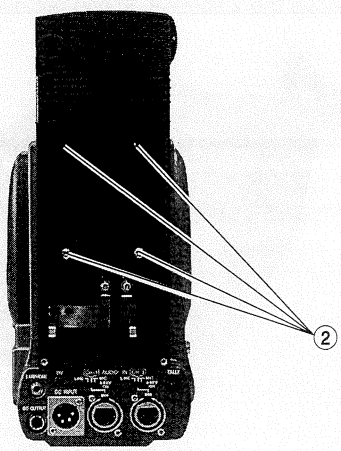

Fig. 1-6-4(2)

(3) Unplug the power cable that supplies power from the battery case to the main unit, from the connector Ⓒ.

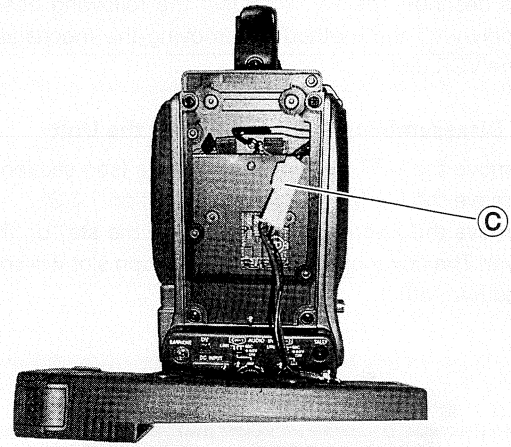

Fig. 1-6-4(3)

1.6.5 Removing the REG Board

(1) Remove the battery case (see section 1.6.4).
(2) Remove the 2 screws ③ and remove the panel.

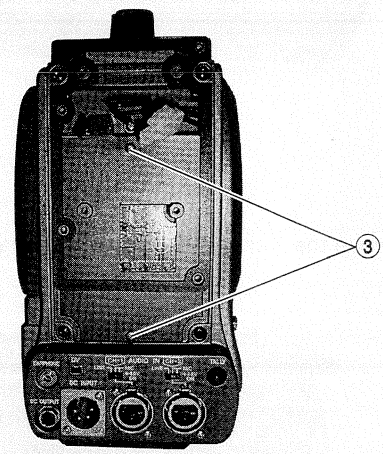

Fig. 1-6-5(1)

(3) Remove the 2 screws ④ and remove the REG board.

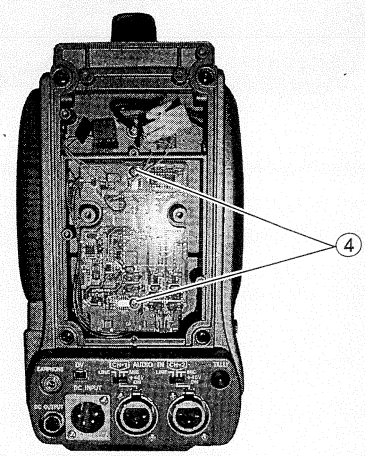

Fig. 1-6-5(2)

1.7 DISASSEMBLY OF THE VCR UNIT

The mechanism unit incorporated in the unit can be disassembled as described below. Note that the following description deals only with the method of removing the mechanism unit from the VCR unit.

1.7.1 Disassembling the Front Part of the Unit

(1) Remove the VCR unit from the camera (see section 1.6.2).
(2) Remove the DV MAIN board (see section 1.6.3).
(3) Remove the 2 screws ① and remove the stay on the front cover. The cover of the cassette insertion slot will come out together with it.

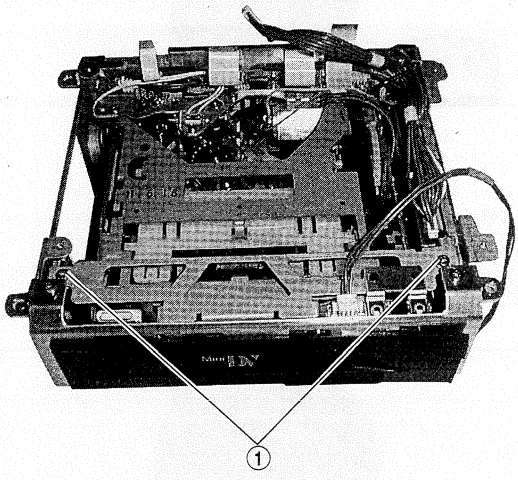

Fig. 1-7-1(1)

(4) Remove the 2 screws ② and remove the front stay.

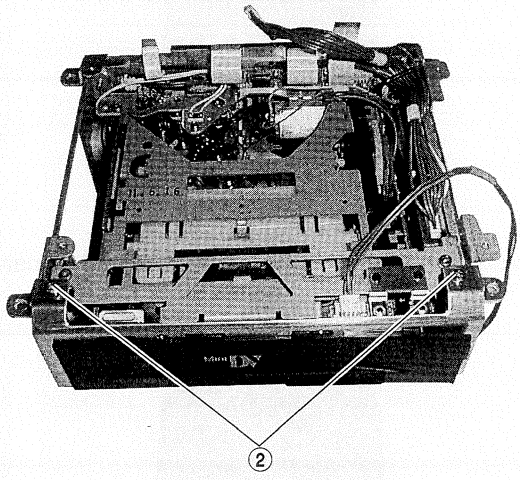

Fig. 1-7-1(2)

1.7.2 Disassembling the Rear Part of the Unit

(1) Remove the 2 screws ③ and remove the rear side stay.

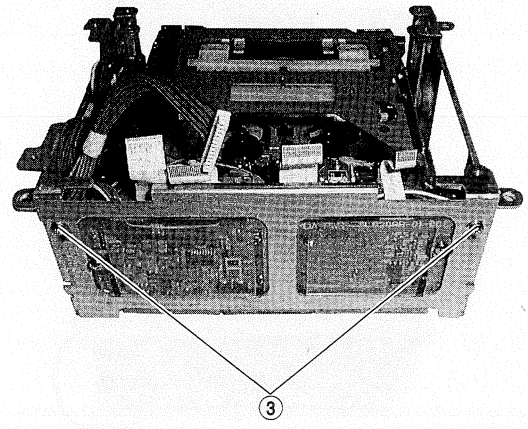

Fig. 1-7-2(1)

(2) Remove the 2 screws ④ and remove the active head cleaner. During this operation, be careful not to apply excessive force to the wire that is connected between the active head cleaner assembly and CN609 on the PR & MDA boards.

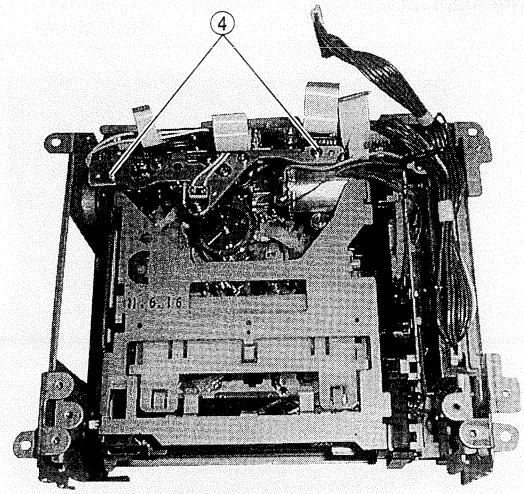

Fig. 1-7-2(2)

(3) Remove the 2 screws ⑤ and remove the side stays.

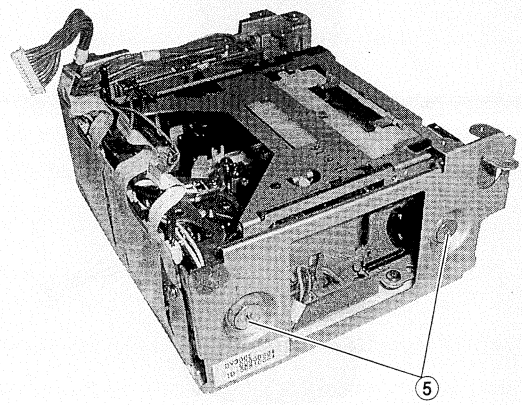

Fig. 1-7-2(3)

(4) Insulators (blue) are attached to the retaining screws. Be sure to attach the insulators when re-assembling the side stays.
(5) The side stays to both sides are attached in the same way. Remove the 2 screws ⑥ and remove the side stays.

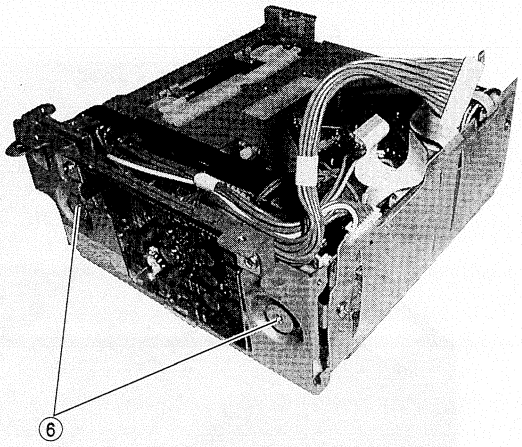

Fig. 1-7-2(4)

(6) After removing the rear stays and side stays (left and right), remove the 2 screws ⑦ then remove the PR & MDA board. When removing the PR & MDA boards, be careful not to damage the wires and FFCs connecting them to the deck assembly housing motor and power supply board.

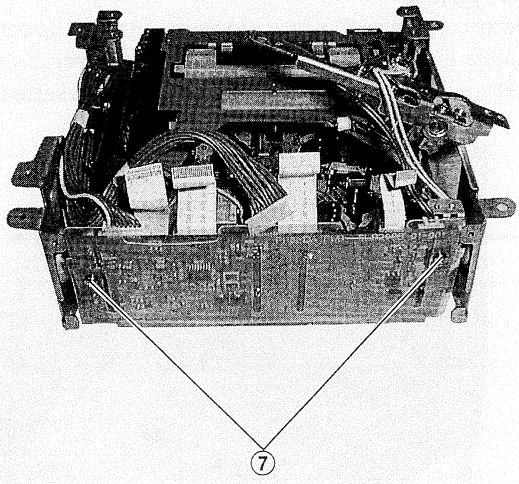

Fig. 1-7-2(5)

1.7.3 Removing the Cassette Housing Assembly

(1) Remove the 2 screws ⑥ and remove the cassette housing assembly.

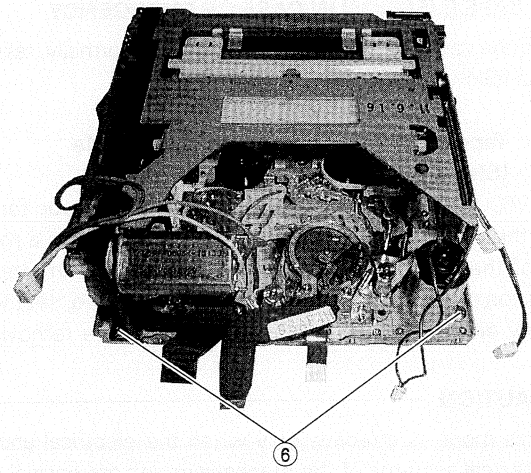

Fig. 1-7-3

1.7.4 Removing the Mechanism Unit

(1) Remove the 3 screws ⑧. This allows the mechanism unit to be removed from the stays When it is required to disassemble the mechanism unit itself, see SECTION 2.

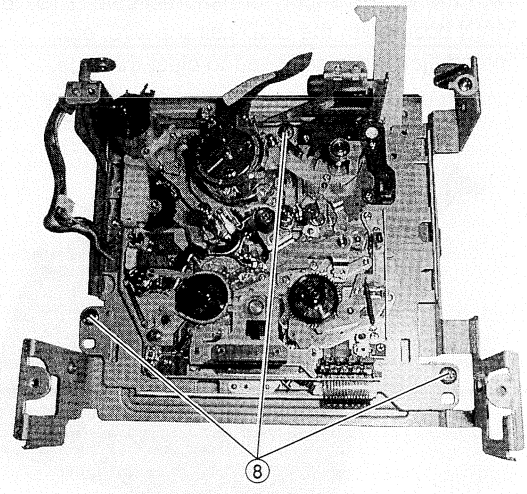

Fig. 1-7-4(1)

(2) When the remove the mechanism unit completely, also remove the connector Ⓐ from the rear.

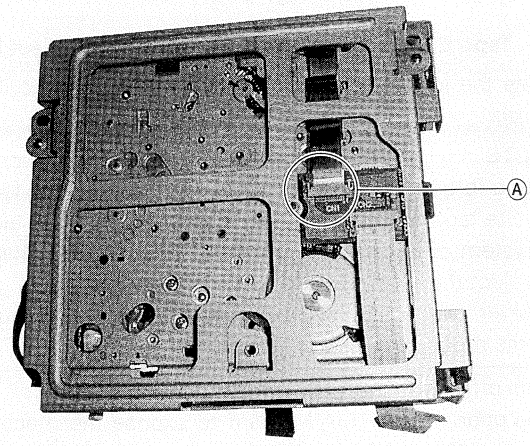

Fig. 1-7-4(2)

1.8 TAPE EJECTION IN CASE OF EMERGENCY

When the cassette tape cannot be ejected normally, take it out by the following methods.

1.8.1 Tape Ejection Using Forced Eject Mode (Short-circuiting of Internal TP)

GY-DV500 is provided with a compulsory eject mode for use in case the button operations are not accepted due to a malfunction of the mechanism control circuitry. When an attempted operation of the operation buttons is not accepted, set the compulsory eject mode as described below before removing the tape.

CAUTION

- This mode is effective only when the electrical and mechanical systems of the mechanism unit are normal and a tape ejection operation is not accepted due to a problem of the electrical system.
- If there is a problem in the mechanical system of the unit, this mode may be ineffective. If compulsory ejection is performed in such a case, the tape could be damaged or cut.

(1) Remove the left side cover (see section 1.2.1).
(2) With the power supply on, short-circuit TP107 on the DV MAIN board with the GND using a wire, etc.
(3) Forced ejection is activated to eject the tape.

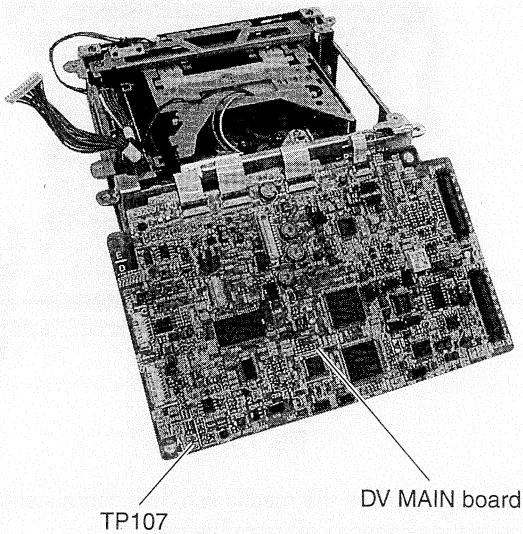

Fig. 1-8-1

1.8.2 Tape Ejection without Using the Forced Eject Mode

Activate the loading motor by applying DC voltage to its two terminals.

NOTE

When a forced ejection is not accepted because the loaded cassette tape cannot be ejected due to a fault in the electrical system or because of some problem in the mechanism unit, eject the tape by using the following procedure.
However, as this mode drives the loading motor, it assumes that the mechanical system is operating normally.

(1) Turn off the power supply to the unit.
(2) Flip open the DV MAIN board to expose the mechanism (see section 1.6.3).
(3) Apply 3 V DC to the electrodes at the top of the loading motor (red wire to + pole, brown wire to - pole) to unload the tape. Unload it little by little because it could be damaged or contaminated by grease if the pole base assemblies are returned completely beyond the position of the tape.

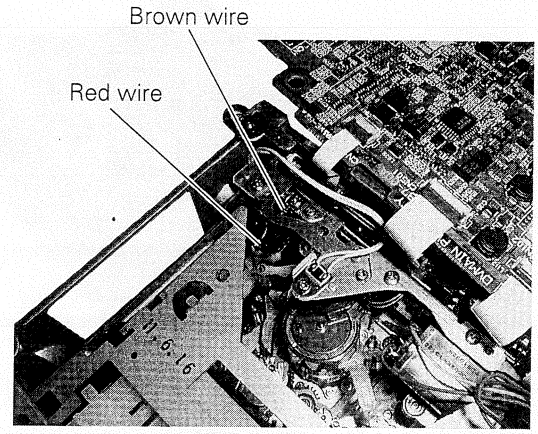

Fig. 1-8-2(1)

(4) If the tape slackens, take it up by rotating the shaft at the top of the capstan motor in the direction of the arrow using a sharp-tipped object (chip IC replacement tool, etc.).
(5) Repeat steps (3) and (4) above until the tape is taken up completely.
(6) After confirming that the tape has been taken up completely, rotate the gear of the cassette housing assembly in the direction of the arrow in order to eject the cassette tape.

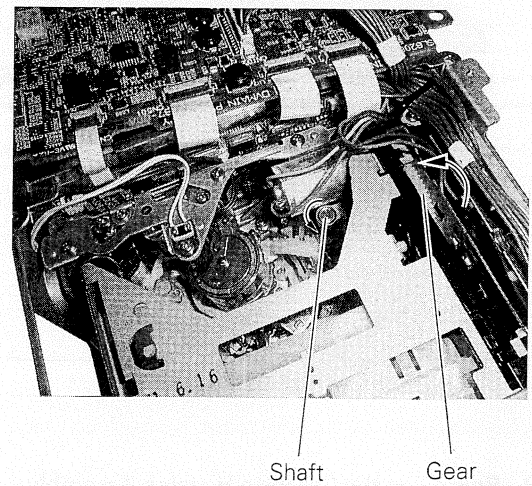

Fig. 1-8-2(2)

1.8.3 Manual Tape Ejection

If the loading motor cannot be run by the procedure outlined in section 1.8.2, the mechanism may be defective. When the loading motor is defective, remove the tape as described below.

(1) Remove the mechanism unit from the main unit. See section 1.6.2 for the removal method.
(2) After removing the mechanism unit, remove the DV MAIN board (see section 1.6.3).
(3) Remove the 2 screws and remove the active head cleaner assembly (see section 1.7.2).
(4) Remove the side cover to easy operation (see section 1.7.2).
(5) Remove the 2 screws and remove the rear panel from the side of the PR & MDA board.
Carefully unplug the wires so as not to damage them, then remove the PR & MDA board (see section 1.7.2).

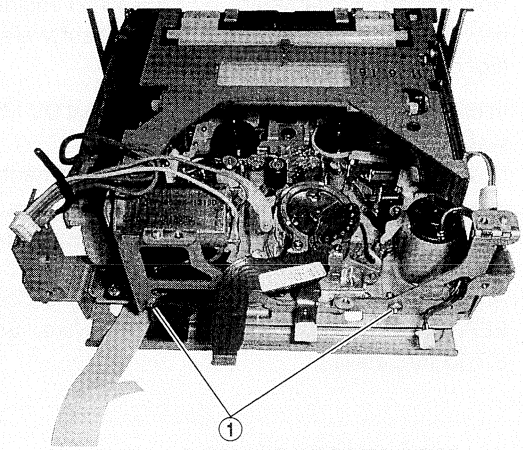

Fig. 1-8-3(1)

(6) Remove the 2 screws ① and remove the active head cleaner stay.

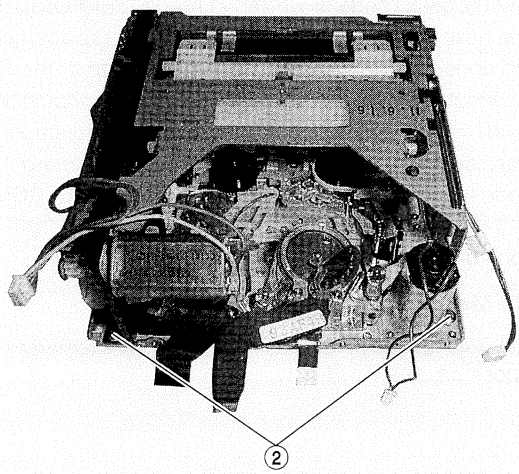

Fig. 1-8-3(2)

(7) Loosen the 2 screws ② so that the cassette housing is separated freely.
(8) Remove the 4 screws ③ and remove the loading motor.

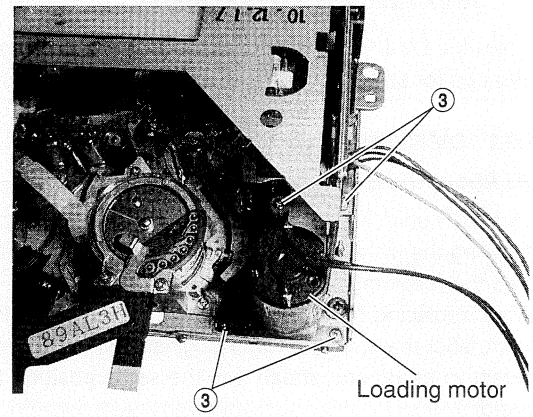

Fig. 1-8-3(3)

(9) Unload the pole base assemblies by rotating the gear shown in the figure in the direction of the arrow.

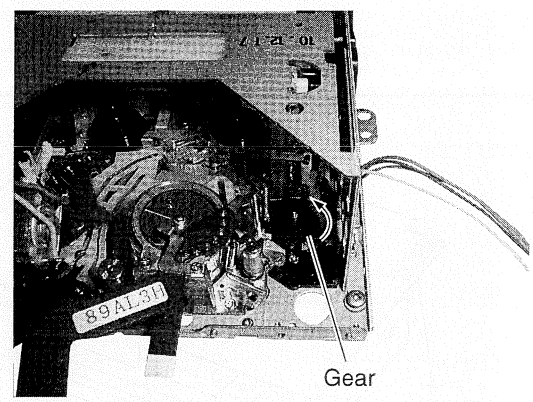

Fig. 1-8-3(4)

(10) The pole base assemblies should be unloaded little by little. If they are returned completely beyond the position of the tape, the tape may slacken and become damaged or stained by grease.
(11) If the tape slackens, take it up by rotating the shaft on the top of the capstan motor in the direction of the arrow using a sharp-tipped object (chip IC replacement tool, etc.) (see section 1.8.2-(4)).
(12) Repeat steps (9) and (10) above until the tape is taken up completely.
(13) After confirming that the tape has been taken up completely, tighten the cassette housing retaining screws which were loosened in step (6).
(14) Attach and clamp the cassette housing again, then rotate the gear of the housing assembly in the direction of the arrow to eject the cassette tape in the same way as in section 1.8.2-(6).

1.9 CAUTION FOR REPLACING THE DV MAIN BOARD AND VIDEO SYSCON BOARD

When the DV MAIN board or VIDEO SYSCON board has been replaced for servicing, be sure to enforce the following items.

1.9.1 DV MAIN Board

[A] About the ID Management Label

Each VCR unit carries an ID label in compliance with IEEE1394 showing the unique ID assigned on the production line.
(See the following figure for the label position.)
When replacing the DV MAIN board, remove the ID management label that was provided originally with the unit from the defective board and attach it in the same position to the new board.

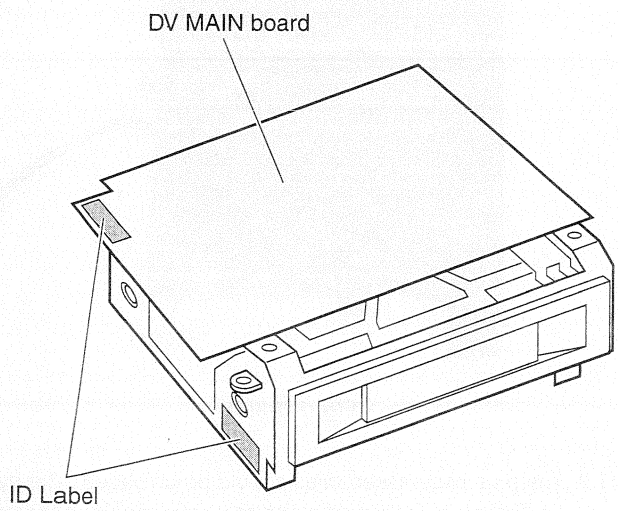

Fig. 1-9-1

[B] Load EEPROM Internal Data

The EEPROM provided with the new board for replacement contains no data, while the EEPROM originally provided with the VCR unit contains the IEEE1394 ID data as well as all adjustment data written in the assembly and adjustments written on the production line. This means that the new VCR unit will not function if the new EEPROM is used in the condition in which it is delivered.
When replacing the DV MAIN board, load the internal data of the EEPROM on the original board to the EEPROM of the new board.

(1) How to use original EEPROM to new DV MAIN board.
Remove the EEPROM from the original DV MAIN board, and attach the chip to the new board.

(2) How to write data from the original board to the new EEPROM
How to load all parameters in EEPROM on original board to new EEPROM by using the adjustment software.
(For details, see section 3.7.13)

(3) In case of original EEPROM on the original DV MAIN board was broken.
Load the default data before making adjustments with the adjustment software, write the data in the new EEPROM, then make adjustments by following the adjustment procedures. (See section 3.7.12 for details.)
And then, input the ID number on the original board to new EEPROM by using the adjustment software. (See section 3.7.13 for details.)

1.9.2 VIDEO SYSCON Board

[A] Transporting of IC407 (EEPROM) Data

When the SSF function is used, the cassette number recorded on tape (see section 9.4.1) has the model ID code appended to it. The model ID code is written in IC407 (EEPROM). However, as the new EEPROM mounted on the new replacement circuit board does not have the ID code written into it, the SSF function cannot work normally (the model ID code should be written in IC407 for the correct operation of the SSF function).
Nevertheless, no means is provided for transporting the model ID code from the original EEPROM to the new EEPROM. Therefore, it is recommended to remove the original IC from the original board and mount it on the new board.

[B] ID Management Label

An ID management label is attached to the camera head. For the position, see Fig. 1-4-1.

1.10 FUNCTIONS OF INTERNAL SWITCHES

1.10.1 DIP Switch S901 on ROM Board

Symbol	No.	Name	Function	Shipment
S901	1	Adjustment mode	Adjustment mode ON/OFF	OFF
	2	Check mode	Check mode ON/OFF	OFF
	3	Not used		OFF
	4	Character mixing	TEST OUT character display ON/OFF	OFF
	5	Not used		OFF
	6	Color matrix adjustment	Color matrix adjustment mode ON/OFF	OFF
	7	Setup (NTSC model only)	ON (0% setup)/ OFF (7.5% setup)	OFF
	8	Function setting	Initial setting of camera functions	OFF

Table 1-10-1

(1) Adjustment mode (S901-1)
Set S901-1 to ON to initiate the camera electrical adjustment mode.
For details, see section 3.3.

(2) Check mode (S901-2)
Set S901-2 to ON to display the camera's check mode screen on the viewfinder.
In this mode, the auto white balance and auto iris control data in the microcomputer controlling the camera can be viewed and checked. (This mode is not used for adjustments but is intended to simply allow the checking of control values and their functions.)

```
- CHECK MODE -
R-G            : *
B-G            : *
R GAIN LEVEL   : *
B GAIN LEVEL   : *
PEAK           : *
APL            : *
NAM ERROR      : *
GAIN *dB       : *
```

Fig. 1-10-1(1)

R-G/B-G
Shows the data on the R/G/B signals input to the CPU for use in white balance control in terms of R-G and B-G. The values are variable between -127 and 128.
These values approach 0 if the white balance circuit is activated by capturing a non-color image such as a gray scale.

R GAIN LEVEL/B GAIN LEVEL
Show the levels of the R and B channel white balance control signals.
These values are variable between 0 and 255.
The R value tends to decrease and the B value tends to increase under low color temperatures (reddish lighting), and the R value tends to increase and the B value tends to decrease under high color temperatures (bluish lighting).

PEAK
Shows the peak hold value of the video signal in a vertical scanning period.

APL
Shows the average picture signal level.

NAM ERROR
Shows the NAM value used in the auto iris control.
The value is variable between -127 and 128.
The value approaches 0 when the auto iris control approaches the optimum level.

GAIN
Shows the electrical gain value set with the GAIN switch on the right-hand side of the unit.
Shows "ALC" in the full auto-shooting mode.

(3) Character mixing (S901-4)
Set S901-4 to ON to superimpose the same characters as those displayed on the viewfinder-screen in the output signal from the TEST OUT terminal. This is a convenient facility for adjustment because the adjustment menu and screen can be displayed on an external monitor.

(4) Color-matrix adjustment (S901-6)
Set S901-6 to ON to view the color-matrix adjustment-mode screen on the
Viewfinder-screen.
This mode makes it possible to set color-matrix parameters in details (see section 1.12).

* Note that the color-matrix adjustment is not a normal adjustment item. It is usually not required to adjust the color-matrix because this has been set to the optimum level before shipment.
* In case a color-matrix adjustment becomes necessary because of a user's request, it should be performed in accordance with the description in section 1.2.

(5) Setup (S901-7): NTSC only
Set S901-7 to ON or OFF to select whether or not the output signal setup is included in the TEST OUT and MONITOR OUT terminals output.
(Note that the signal recorded onto tape is not affected by the position of this switch. The signal is always recorded without the setup information.)
As changing the position of this switch does not alter the signal level, it is not necessary to re-adjust the signal recording according to the position of this switch. This switch is effective only on the camera video output. With the video signal obtained by playing back a previously recorded tape, whether the setup is included or not can be selected with the item "SETUP" in the Service Menu (see section 1.13.3).

(6) Function setting (S901-8)
This switch is used to set the functions shown in Table 1-9-1(2).
This switch is usually used to switch the defaults of the domestic and export-oriented models.

Function		S901-8		
		NTSC		PAL
		OFF	ON	Do not care
GAIN	L	0 dB	0 dB	0 dB
	M	6 dB	9 dB	9 dB
	H	9 dB	18 dB	18 dB
V. SCAN		60.1 to 251.3	60.1 to 2067.0	50.1 to 2053.6
ALC GAIN		0 to + 18 dB	0 to + 18 dB	0 to + 18 dB

Table 1-9-1(2)

* The L/M/H positions of GAIN can also be set individually using the [CAMERA MENU].

1.11 MODES REQUIRED IN SERVICING

1.11.1 Camera Service Menu

The CAMERA SERVICE MENU can be displayed on the viewfinder screen by setting the [POWER] switch to ON while tilting the AUTO WHITE/ACCU FOCUS switch upward (toward AUTO WHITE).

```
— — — CAMERA SERVICE MENU — — —
        Cxxxx  V*. ** <U>
CCD CORRECT                : ON
ERROR DETECT START
WHITE CLIP LEVEL           : 108%
END
```

Fig. 1-11-1

Select an item by turning the SHUTTER dial, and push the SHUTTER dial to select or set it.
Cxxxx V*.**<U>
This item displays the version number of the camer control software (IC902 on ROM board).

* The Character "U" after the Version No. indicates that U version software is running. When "E" is shown here, the software for E version is running.

CAUTION

Also be sure to reset the system after replacing IC902 (ROM) on the ROM board. See section 1.11.2, "System Reset".

CCD CORRECT (ON/OFF)
This item sets whether white blemish due to CCD is to be corrected or not.
To correct : ON
Do not correct : OFF
The factory shipment condition is ON. Even when OFF is selected with this menu, it is temporary and the correction status (ON) is recalled automatically the next time the power is turned on.

NOTE

- To correct any white blemish interference produced after the factory shipment, perform the "ERROR DETECT START" described on the next page. Be sure to warm up the camera by leaving it on for more than 2 hours before performing the "ERROR DETECT START".

- The white blemish correction is performed with the lens iris closed or with the lens cap on. In normal use, the lens iris closes automatically when performing a white blemish correction. However in a case when the lens cable is disconnected and the lens iris cannot be closed, "ERROR DETECT FAIL" will be displayed on the viewfinder and the white blemish correction cannot be executed. Before performing the white blemish correction again, be sure to first close the lens.

ERROR DETECT START

When this item is selected and the SHUTTER dial is pushed, the white blemish detection for correcting CCD white blemish starts automatically.

The following messages are displayed on the viewfinder screen during detection.

ERROR DETECT EXECUTING
↓
ERROR DETECT END

After the completion of error detection, the camera is automatically set to the white blemish correction ON condition.

The following types of white blemish can be corrected.

(1) White blemish correction target area

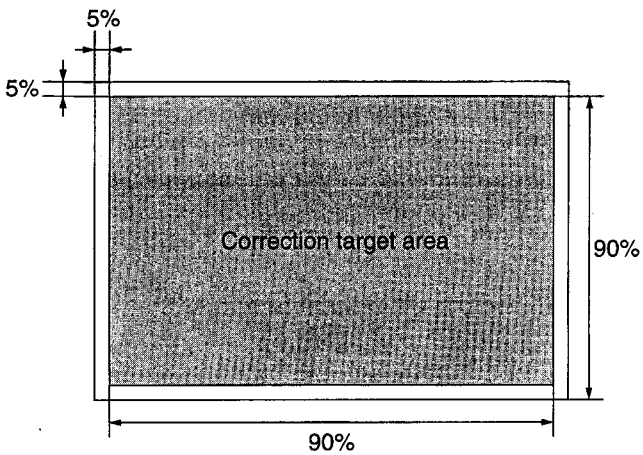

Fig. 1-11-2

(2) Details of correctable white blemishes

- White blemishes at luminance levels of 30 mV or more can be corrected. The total number of white blemishes that can be corrected is up to 7 for the R, G and B signals.
- Even when there are 2 white blemishes on a single scanning line, both of them can be corrected. (However, when they are adjacent, the results of a correction appear inferior to those of the results of the correction of a single white blemish. These results are due to the correction characteristics themselves.)

WHITE CLIP

The white clip level of the through-camera composite output signal that is output at TEST OUT can be selected from the following 2 values:

100% or 108% (shipment setting)

1.11.2 System Reset

While pushing the [SHUTTER] dial, press the [POWER] switch to ON. This resets the system and initializes the menu set items to their default values.

The following description shows items that are initialized to the defaults by a system reset and those that are not.

1.11.3 Resetting DSP Data

While pushing the [SHUTTER] dial and [STATUS] switch tilted toward "SKIN AREA", press the [POWER] switch to ON. This resets the internal setting data (color matrix setting data) in the DSP to the default setting.

1.11.4 Displaying Auto Iris Area Gate

While holding the [AUTO WHITE/ACCU FOCUS] switch down (toward ACCU FOCUS), press the [POWER] switch to ON. The area gate for the auto iris control is displayed in the viewfinder screen.

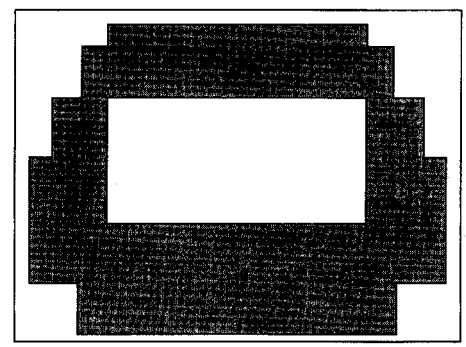

Fig. 1-11-3

1.11.5 List of Servicing Switches (Camera)

The following table that shows the switches described above is for use in servicing. Use this table as a reference in servicing.

Switch Operation	Result
[AUTO WHITE] + [POWER] ON	Service menu display
[SHUTTER] + [POWER] ON	System reset
[STATUS] + [SHUTTER] + [POWER] ON	DSP data reset
[ACCU FOCUS] + [POWER] ON	Area gate display

Table 1-11-4

1.11.6 EEPROM in Camera

IC905 on the CAM1 board is an electrically erasable/rewritable EEPROM. It stores the following data.

- Camera adjustment data set in the adjustment mode.
- Settings in [CAMERA MENU].
- White blemish position coordinate data for use in white blemish correction.
- Auto white balance control data (A/B).
- Camera status at the last power OFF (positions of non-lock type switches, etc.).

Therefore, when retention of the above data becomes impossible due to a failure in the EEPROM or over the 1 million times of rewrite count, the EEPROM should be replaced with a new one and the data should then be re-set in it.

1.11.7 Tripod base

See the KA-510U servide manual NO. 60065 for servicing.
The tripod is not exactly same as KA-510U. See note for the difference.

Note

These 1/4 and 3/8 inch fixing tripod holes are not povided for the KA-510U.

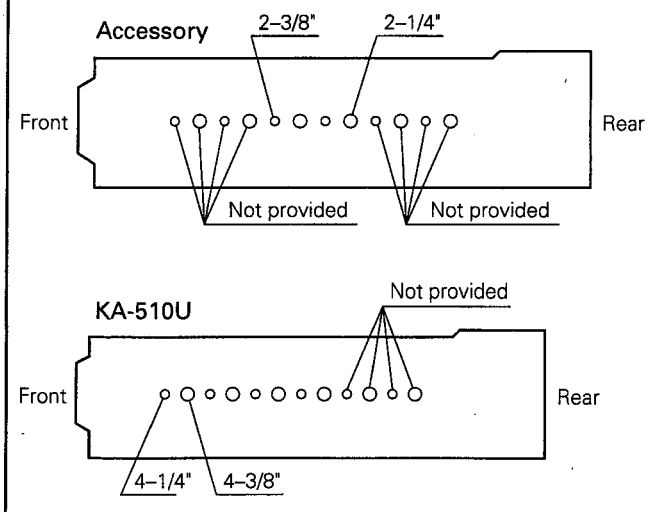

1.12 CHANGING THE COLOR MATRIX SETTING

NOTE

The color reproduction properties of the color-matrix circuit built into the DSP can be re-set by varying the values of 9 parameters. However, as these parameters have been set at the factory to the default values based on detailed studies of the product development process, it is usually not recommended to alter them. Note that this adjustment is not a normal electrical adjustment item.
Should a re-adjustment of the color matrix (a color reproducibility change) be required as a result of a user request, etc., this should be performed only after studying and understanding the details of the following instructions.

1.12.1 Setting the Color Matrix

Preparation

The color matrix setting requires a color chart for use as a reference for color reproduction and a vectorscope. As we do not specify a color chart for this purpose, discuss the matter with any user requesting a custom setting and use a color chart to be agreed by the user.

Adjustment

The color-matrix circuit can be set using menus displayed on the screen (the viewfinder-screen or the test out screen).

MODE	:	M3	M2	M1	DATA
R※(R-G)	:	※	※	※	※
R※(R-B)	:	※	※	※	※
G+(G-R)	:	X	※	※	※
G–(G-R)	:	※	X	※	※
G+(G-B)	:	X	※	※	※
G–(G-B)	:	※	X	※	※
B+(B-G)	:	X	※	※	※
B–(B-G)	:	※	X	※	※
B※(B-R)	:	※	※	※	※

Fig. 1-12-1

Use the following procedure.

(1) Remove the right side cover (see section 1.3.1)
(2) Set DIP switch S901-6 on the ROM board to ON to display the color-matrix setting menu on both the viewfinder and testout screens.
(3) Move the cursor (mark of "▓") to the desired item by using the [SHUTTER] dial.
(4) When the cursor set on the desired item, pushing the [SHUTTER] dial causes the selected item to blink. (This is the status of the value adjustment.)
(5) When the adjustment value is blinking, rotating the [SHUTTER] dial varies the adjustment value. The available adjustment values are "M3", "M2", "M1" which is 0 or 1, and "DATA" which is between 0 and 31.

(6) Set DIP switch S901-6 on the ROM board to OFF. The color-matrix setting menu is canceled and the normal screen appears again.

NOTE

The settings are stored and reflected every time a value in an item is changed. The setting values marked "X" do not need to be changed.

NOTE

If the [STATUS] switch is pressed during the value of some adjustment item is blinking, all of the data being set is reset to the default values.

1.12.2 Details of Setting Items

As described above, the color matrix setting consists of varying 12 items using 9 parameters. The following table shows a comparison of the setting items.

NOTE

The model diagrams in the table may be interpreted as follows.

(Example)

This diagram represents the display area of the vectorscope.

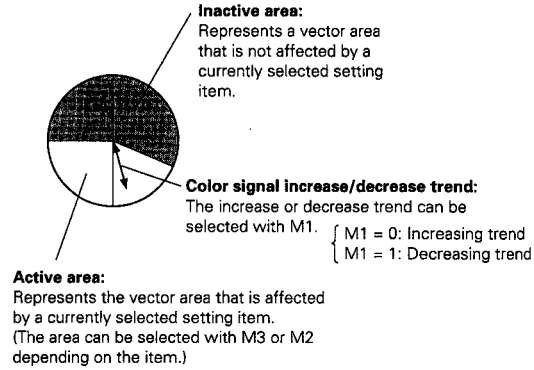

MODE	Active Area Graph display	M3 0 : Active 1 : Inactive	M2 0 : Active 1 : Inactive	M1 0 : Increase 1 : Decrease	DATA 0 – 31
R±(R-G)	M3 → 0 or 1 M2 → 0 or 1			0 or 1	※
R±(R-B)	M3 → 0 or 1 M2 → 0 or 1			0 or 1	※
G+(G-R)	M2 → 0 or 1	×		0 or 1	※
G–(G-R)	M3 → 0 or 1		×	0 or 1	※
G+(G-B)	M2 → 0 or 1	×		0 or 1	※
G–(G-B)	M3 → 0 or 1		×	0 or 1	※
B+(B-G)	M2 → 0 or 1	×		0 or 1	※
B–(B-G)	M3 → 0 or 1		×	0 or 1	※
B±(B-R)	M3 → 0 or 1 M3 → 0 or 1			0 or 1	※

Table 1-12-1

1.13 SERVICE MENU

1.13.1 Operation Method

When the [MENU] button is pressed, the setup menu appears on the viewfinder screen to allow the user to perform setups. (For the contents of the setup menu, refer to page 66 of the instruction manual). Then, with the setup menu displayed, press the [MENU] button while holding down the [LOG] button to display the service menu.

To change a menu setting value, press the [DATA SET] button. The viewfinder screen and counter display show the blinking "DATA SET" indicators and the set returns to normal mode.

To return to the setup menu, turn the power off and then on again.

1.13.2 Configuration of the Service Menu (Displayed on the Viewfinder Screen)

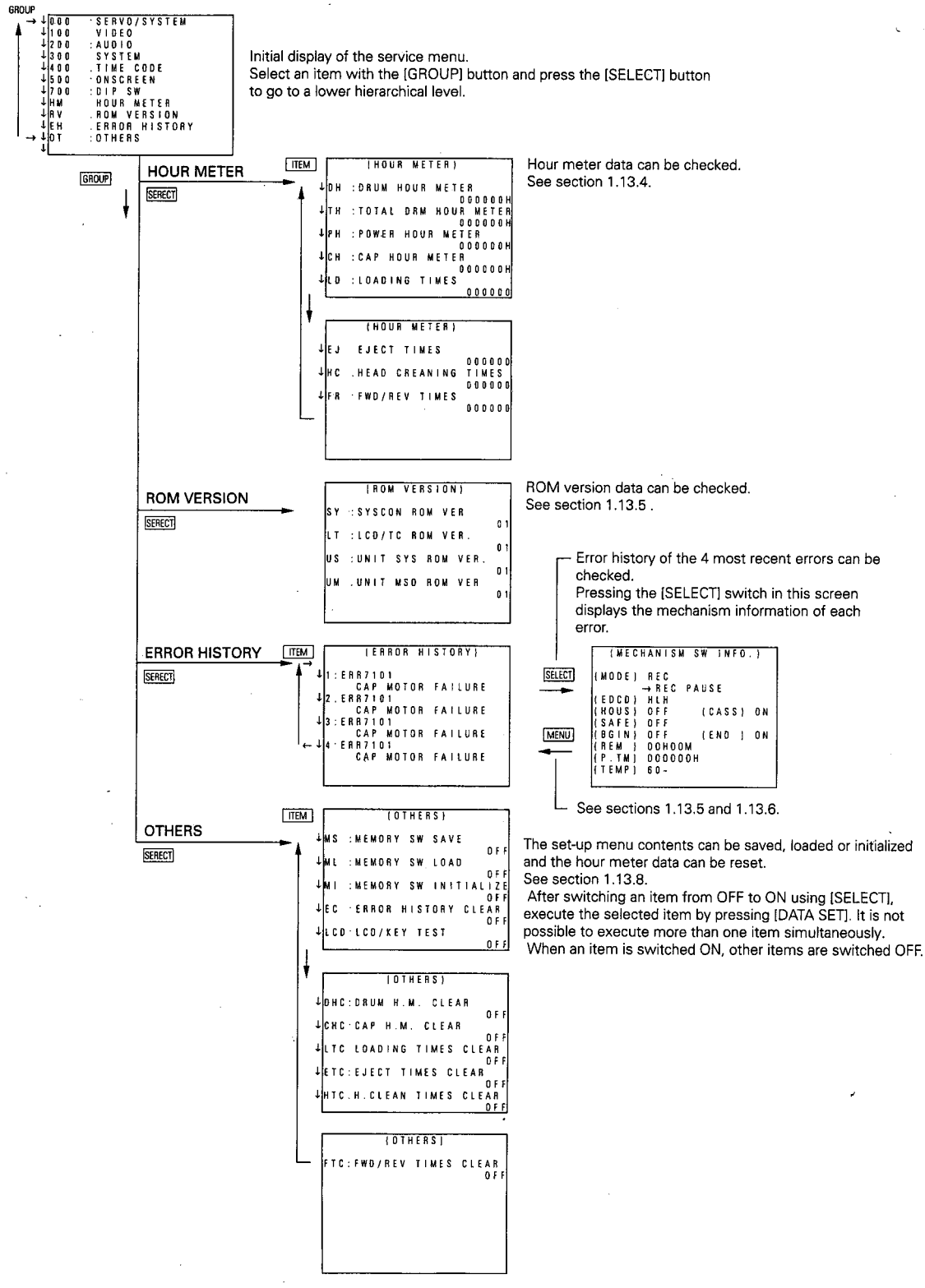

1.13.3 Contents of Service Menu

Group	Item	Settings	Counter Display	Factory Default	Description
000 SERVO/ SYSTEM	002: OPERATION LOCK	ON OFF	002 01 00	OFF	Operation lock setting.
	050: REMOTE SELECT	LOCAL IEEE1394 RS232C	rMSL Lc 1E 23	LOCAL	User setup menu (Refer to page 68 of the instruction manual.)
	080: BATTERY SHUTDOWN V	10.5 – 11.0V (0.1V step)	bE 105	10.5V	Battery empty detection voltage setting.
	081: BATTERY ALARM V	10.5 – 12.0 V (0.1V step)	bA 110	11.0V	Battery alarm detection voltage setting.
	082: BACK TALLY MODE	BLINK OFF ON	rtMd bL oFF on	BLINK	User setup menu (Refer to page 68 of the instruction manual.)
	083: FRONT TALLY MODE	BLINK ON	083 03 01	BLINK	Select the front tarry BLINK: Blinking ON: Lighting
100 VIDEO	125: SET UP (Only U-ver.)	OFF ON	125 00 01	ON	Select the setup of MONITOR OUT in playback mode. ON: Setup added. OFF: No setup.
	126: INPUT SELECT	CAMERA IEEE1394	ud cM 1E	CAMERA	Input signal selection User setup menu (Only U-ver.) (Refer to page 68 of the instruction manual.)
200 AUDIO	244: LOW CUT	OFF CH1 CH2 CH1&CH2	LctF oF 01 02 on	OFF	User setup menu (Refer to page 68 of the instruction manual.)
	245: SAMPLING RATE	32K 48K	SMPL 48 32	48K	User setup menu (Refer to page 68 of the instruction manual.)
	246: FRONT VOLUME ENABLE	DISABLE ENABLE	FruL oF on	ENABLE	User setup menu (Refer to page 68 of the instruction manual.)
300 SYSTEM	303: WARNING DISABLE	ENABLE DISABLE	303 00 01	ENABLE	ENABLE: Warning enabled. DISABLE: Warning disabled.
	305: REC REPEAT	OFF ON	305 00 01	OFF	OFF: REC Full Repeat enabled. ON: REC Full Repeat disabled.
	306: LONG PAUSE DISABLE	ENABLE DISABLE	306 00 01	ENABLE	ENABLE: Long pause is canceled after specified period of time (set using Menu 307). DISABLE: Long pause is not canceled.
	307: LONG PAUSE TIME	3MIN 30MIN	LGPt 03 30	30MIN	User setup menu (Refer to page 68 of the instruction manual.)
	396: BATTERY TYPE	12V 13.2V 14.4V	bAtt 12 13 14	12V	User setup menu (Refer to page 68 of the instruction manual.)
	398: SSF MODE	OFF CUE MODE MARK MODE	SSF oF cU Mr	CUE MODE	User setup menu (Refer to page 68 of the instruction manual.)
400 TIME CODE	406: USERS BIT GROUP	NOT SPECIFIED ISO CHAR UNASSIGNED1 UNASSIGNED2	40b 00 01 02 03	NOT SPECIFIED	User bit's binary group flag setting
	416: NON DROP/DROP (Only U-ver.)	DROP NON DROP	tcG dF nF	DROP	User setup menu (Refer to page 68 of the instruction manual.)
500 ON SCREEN	515: CALENDAR SELECT	JAPAN USA EUROPE	515 00 01 02	U-ver: USA E-ver: EUROPE	Calendar display format selection. JAPAN: Year/Month/Day USA: Month/Day/Year EUROPE: Day/Month/Year
	516: DISPLAY SELECT	TC CLOCK	dSP tc cL	TC	User setup menu (Refer to page 68 of the instruction manual.)

Group	Item	Settings	Counter Display	Factory Default	Description
700 DIP SW	700: DIP SWITCH-0	OFF ON	700 00 01	OFF	Operate LED display switching OFF: Blinks in amber when the cassette cover is opened. ON: Extinguished when the cassette cover is opened.
	701: DIP SWITCH-1	OFF ON	701 00 01	OFF	OFF: Other operations than ejection are inhibited when the cassette cover is opened. ON: Operations are valid even when the cassette cover is opened.
	702: DIP SWITCH-2 to 715: DIP SWITCH-15	OFF ON	702 00 01 to 715 00 01	All OFF	Switching inhibited. Must be set to OFF.

Operations are not accepted when the cassette cover is open. Therefore, DIP switch-0 and -1 can be used in checking the operation when the side cover is open or in the compatibility adjustment.

1.13.4 HOUR METER

This screen allows the data of hour meters to be checked.

Item	Counter Display	Description	Max. Display Hours/Count
DRUM HOUR METER	dH******	Displays the drum rotation hours.	999999H
TOTAL DRM HOUR METER	tH******	Displays the total drum rotation hours. This data cannot be reset.	999999H
POWER HOUR METER	PH******	Displays the power ON hours. This data cannot be reset.	999999H
CAP HOUR METER	cH******	Displays the capstan motor rotation hours.	999999H
LOADING TIMES	LH******	Displays the loading count.	999999TIMES
EJECT TIMES	Ej******	Display the ejection count.	999999TIMES
HEAD CLEANING TIMES	Hc******	Displays the active cleaning head operation count.	999999TIMES
FWD/REV TIMES	Fr******	Displays the forward or reverse operation count	999999TIMES

****** are the figures of time (or count).

1.13.5 ROM VERSION

This screen allows the ROM versions to be checked.

Item	Counter Display	Board Name Symbol No.	Remark
SYSCON ROM VER.	SY **	Video/Sys-con board IC403	PLSL1063-V1-**
LCD/TC ROM VER.	Lt **	Audio/LCD board IC601	UPD78P058BT***
UNIT SYS ROM VER.	US **	DV MAIN board IC101	MN102F1617HL-**
UNIT MSD ROM VER.	UN **	DV MAIN board IC401 ROM board IC1 (The MSD CPU program is written in IC401 and ROM board IC1.)	M31020EAVP-*** M27W102-80N6-** (The ROM version No. of PAL begins with "80".)

** is the version number.

1.13.6 ERROR HISTORY

This screen allows the history of the 4 most recent errors to be checked.

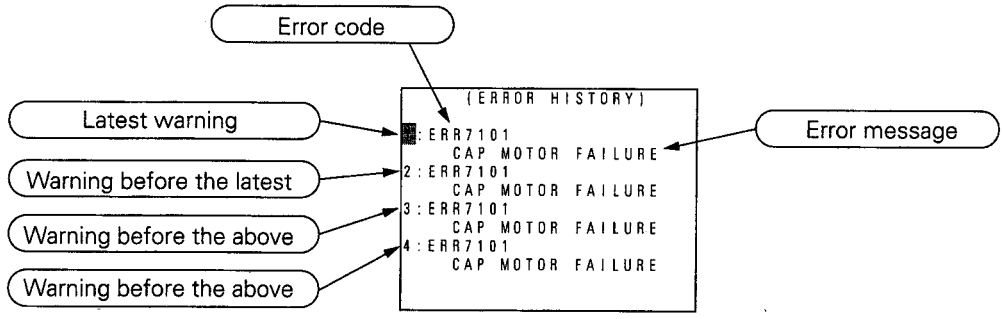

1.13.7 MECHANISM SW INFO

This screen allows the mechanism mode at each error to be displayed.

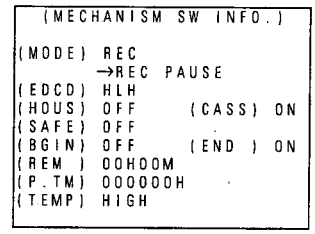

Display

Item	Description	Input Pin	Display
(MODE)	Mode at the moment of VCR error & mode immediately before.	—	PLAY, STILL, REC, REC PAUSE, NO CASSETTE, EJECT, STNDBY-ON, FF, REW, SHTL, STILL, SHTL X10, SHTL X-10
(ECOD)	Rotary encoder output.	DV MAIN board IC401 Pin 44 → CAM0 Pin 45 → CAM1 Pin 46 → CAM2	Shows H or L according to the mechanism position. Rotary encoder terminal (ENCD) H L H CAM0 CAM1 CAM2
(HOUS)	Cassette housing switch status.	DV MAIN board IC401 pin 27	ON : Housing inserted/ejected status OFF : Housing operating status
(CASS)	Cassette switch status.	DV MAIN board IC401 pin 32	ON : Cassette tape inserted OFF : Cassette tape not inserted or during insertion /ejection
(SAFE)	REC safety switch status.	DV MAIN board IC401 pin 47	ON : Non-recordable tape inserted, cassette tape not inserted or during insertion /ejection OFF : Recordable tape inserted
(BGIN)	Tape begin sensor status.	DV MAIN board IC401 pin 126	ON : Tape leader section detected OFF : Magnetic tape section detected
(END)	Tape end sensor status.	DV MAIN board IC401 pin 125	ON : Tape leader section detected OFF : Magnetic tape section detected
(REM)	Remaining tape at the moment of error.	—	Remaining tape time
(P.TM)	POWER HOUR METER data at the moment of error.	—	POWER HOUR METER time
(TEMP)	Set's internal temperature at the moment of error	DV MAIN board IC101 pin 75	UNDER : under 10°C NORMAL : 10 to 40°C HIGH : 40 to 60°C OVER : over 60°C

1.13.8 OTHERS

This screen allows the setup menu to be saved temporarily, loaded or initialized.
To execute an item, switch it from "OFF" (displayed as "00") to "ON" (displayed as "01") with the [SELECT] button, then press the [DATA SET] button (excluding hour meter). As switching an item "ON" switches other items automatically "OFF", it is not possible to execute more than one item simultaneously.

Item	Counter Display	Factory Default	Description
MEMORY SW SAVE	SA 00	OFF	Saves the data set with the setup menu.
MEMORY SW LOAD	LA 00	OFF	Loads the data set for the setup menu.
MEMORY SW INITIALIZE	AI 00	OFF	Initializes the setup menu data to the factory defaults.
ERROR HISTORY CLEAR	Ec 00	OFF	Clears the error history.
LCD/KEY TEST	Lcd 00	OFF	Checks the lighting of operation key LEDs. After changing the setting to "START", press the [DATA SET] button. The viewfinder screen and LCD display show "PERFORM" and the key test mode is set. In this mode pressing an operation key, lights the corresponding LED but does not cause the VCR to operate. To exit from the key test mode, change the setting to "STOP" and press the [DATA SET] button. The viewfinder screen and LCD shows "PERFORM" and the normal mode is reset.
DRUM H.M. CLEAR	dHc 00	OFF	Resets the drum hour meter.
CAP H.M. CLEAR	cHc 00	OFF	Resets the capstan hour meter.
LOADING TIMES CLEAR	L Tc 00	OFF	Resets the loading count.
EJECT TIMES CLEAR	E Tc 00	OFF	Resets the ejection count.
H. CLEAN TIMES CLEAR	H Tc 00	OFF	Resets the head cleaning count.
FWD/REV TIMES CLEAR	F Tc 00	OFF	Resets the forward/reverse operation count

1.14 ALARM DETECTION METHODS

The unit incorporates the alarm display function, which notifies the user of the VCR status, remaining tape and remaining battery power. For the contents of the alarm display, see page 86 of the instruction manual. This section describes the methods applied for alarm detection.

Item	Description	Status After Detection	Detection Method
Servo lock error "SERVO" (Counter display) SYnc inh	When the drum rotation phase is deviated by more than 10 or when the capstan motor rotation speed is deviated by more than 20%.The alarm sound is generated in REC mode. The alarm display only appears in the PLAY mode. When external sync input signal SYNC IN is disturbed, "SYnc inh" (sync inhbit) is displayed.	Same mode is maintained.	The MSD microcomputer detects the drum rotation phase from the phase error between the TSR and HID signals. The capstan motor rotation speed is detected based on the CAP FG signal.
Head clog "RF" (Counter display) HEdCLog	Measures the error rate during playback or quick review with RET button and displays "HEAD CLOG" when the viterbi is ON and exceeds 2000 (total).	Same mode is maintained.	—
Dew condensation "DEW"	When dew warning occurs with the VCR.	See error code "0201 DEW" in 1.16.	
Lithium battery exhaustion "Li"	When the built-in lithium battery for the timecode backup is exhausted or not installed.	Same mode is maintained.	Decrease in the battery voltage below 2.6 V.
Remaining battery	When the remaining battery power is low.	• Battery nearly empty: Operation is maintained. • Battery empty: Operation stops automatically.	Detects the voltage at system controller pin 62.

1.15 BATTERY POWER DETECTION METHODS

The battery voltage is detected to display the remaining power on the LCD. Since the detection voltage is variable depending on the 12 V/13.2 V/14.4 V battery types, correct settings should be made with the setup menu.

Detection voltage and remaining battery display

Display	Battery Type		
	12V	13.2V	14.4V
E ■ ■ BATT ■ ■ F ■	12.6V –	3.9V –	15.1V –
E ■ ■ BATT ■ ■ F □ ("F" off)	12.0V – 12.5V	13.2V – 13.8V	14.4V – 15.0V
E ■ ■ BATT ■ □ F □ ("F" off)	11.8V – 11.9V	13.0V – 13.1V	14.2V – 14.3V
E ■ ■ BATT ■ □ □ F □ ("F" off)	11.6V – 11.7V	12.8V – 12.9V	13.9V – 14.1V
E ■ ■ BATT □ □ □ F □ ("F" off)	11.3V – 11.5V	12.4V – 12.7V	13.6V – 13.8V
E ■ ■ BATT □ □ □ F □ ("F" off)	11.2V	12.3V	13.4V – 13.5V
E ■ ■ BATT □ □ □ F □ ("F" off, "BATT" blinking) (Segment blinking)	11.0V – 11.1V	11.6V – 12.2V	12.6V – 13.3V
E ■ □ BATT □ □ □ F □ ("F" off, "BATT" blinking) (Segment blinking)	10.6V – 10.9V	10.6V – 11.5V	10.6V – 12.5V
E □ □ BATT □ □ □ F □ ("F" off, "BATT" blinking) (Segments off)	– 10.5V	– 10.5V	– 10.5V

1.16 WARNING CODES

If a problem occurs during operation, the unit diagnoses the cause by itself, provides a warning through the "warning LED" and "buzzer", and displays the diagnosis results in the counter display.

[LCD counter]
Error display appears. (**** is the error code.)
*Err-****
[Warning LED]
The red LED blinks (at about 4 Hz).

[Buzzer]
Generates a continuous tone. However, the tone is intermittent (at about 4 Hz) in case of dew alarm.

0201 Condensation

•VCR operation
In save mode:
· If a cassette is loaded, enters the AUTO OFF mode.
· If a cassette is not loaded, the warning LED lights and the SAVE mode is maintained.
In other modes:
· If a cassette is loaded, the AUTO OFF mode is initiated.
· If a cassette is not loaded, the warning LED lights and the drum rotates. An operation is accepted after any condensation has evaporated.
•Cause : Condensation of moisture.
•Detection method : Check the voltage at the pin 124 of IC401.
DEW ON : 2.4 V or more
DEW OFF : 1.8 V or less

0601 WRONG CASSETTE TYPE

•VCR operation : The AUTO OFF mode is initiated.
•Cause : A wrong type of cassette for the computer is inserted.
•Detection method : An error in the cassette type is detected (at pins 117, 118 and 119 of IC401) after the insertion is completed.

3200 LOADING INCOMPLETE

•VCR operation : The AUTO OFF mode is initiated.
•Cause : Malfunction of the loading motor, rotary encoder or mechanism.
•Detection method : The rotary encoder output is checked (at pins 44, 45 and 46 of IC401) and an error is detected when loading has not completed in 4 seconds.

3300 UNLOADING INCOMPLETE

- •VCR operation : After the first unloading error, the cassette is loaded temporarily, then unloading is retried. If the retry fails again, the AUTO OFF mode is initiated.
- •Cause : Malfunction of the loading motor, rotary encoder or mechanism.
- •Detection method : The rotary encoder output is checked (at pins 44, 45 and 46 of IC401) and an error is detected when unloading has not completed in 4 seconds.

4000 INTAKE INCOMPLETE

- •VCR operation : The AUTO OFF mode is initiated.
- •Cause : Malfunction of the cassette housing switch or cassette housing motor.
- •Detection method : When completion of insertion is not detected (at pin 27 of IC401) within 3 seconds after the start.

4100 EJECTION INCOMPLETE

- •VCR operation : The AUTO OFF mode is initiated.
- •Cause : Malfunction of the cassette housing switch or cassette housing motor.
- •Detection method : When completion of ejection is not detected (at pin 27 of IC401) within 3 seconds after the start.

5605 TAPE BEGIN/END DETECTED SIMULTANEOUSLY

- •VCR operation : The AUTO OFF mode is initiated.
- •Cause : Tape is cut due to abnormal tension or a mechanism defect or because the cassette was inserted while the tape was slack.
- •Detection method : When both the tape begin sensor (at pin 126 of IC401) and the tape end sensor (at pin 125 of IC401) output Low level together when a cassette is loaded.

5606 SP REEL RUNAWAY DURING UNLOADING

- •VCR operation : The AUTO OFF mode is initiated.
- •Cause : Tape is cut due to abnormal tension or a mechanism defect or because the cassette was inserted while the tape was slack.
- •Detection method : When the detected TU reel rotation count (at pin 59 of IC401) exceeds 30 revs. per sec. (1200 pulses) during unloading.

5607 TU/SUP REEL STOPPED DUE TO A CUT TAPE

- •VCR operation : The AUTO OFF mode is initiated.
- •Cause : Tape is cut due to abnormal tension or a mechanism defect or because the cassette was inserted while the tape was slack.
- •Detection method : When the FGs from the SUP and TU reels were not detected at all (at pins 59 and 60 of IC401) during loading.

5702 TAPE END DETECTED AFTER SHORT REW

- •VCR operation : The AUTO OFF mode is initiated.
- •Cause : Tape is cut after the end of the tape has been detected. The mode transition of the mechanism failed.
- •Detection method : When the tape end sensor output (at pin 125 of IC401) remains Low even after 3 seconds have elapsed since the start of the short REW operation following the tape end detection in play mode, etc.

5802 TAPE BEGIN DETECTED AFTER SHORT FF

- •VCR operation : The AUTO OFF mode is initiated.
- •Cause : Tape is cut after the end of the tape has been detected. The mode transition of the mechanism failed.
- •Detection method : When the tape begin sensor output (at pin 126 of IC401) remains Low even after 3 seconds have elapsed since the start of the short FF operation following the tape beginning detection in the reverse search mode, etc.

7001 DRUM MOTOR ROTATION ERROR

- •VCR operation : The AUTO OFF mode is initiated.
- •Cause : Malfunction of the drum motor, MDA circuit or FG detector circuit.
- •Detection method : When the drum FG has not been detected (at pin 54 of IC401) for more than 4 seconds in the drum driving mode.

7101 CAPSTAN MOTOR ROTATION ERROR

- •VCR operation : The AUTO OFF mode is initiated.
- •Cause : Malfunction of the capstan motor, MDA circuit or FG detector circuit.
- •Detection method : When the drum FG has not been detected (at pin 55 of IC401) for more than 2 seconds in the capstan driving mode.

7202 SUP TAPE SLACK DURING CAPSTAN DRIVE

- •VCR operation : The AUTO OFF mode is initiated.
- •Cause : The timing belt is cut or one of the reel control parts in the mechanism is malfunctioning.
- •Detection method : When the SUP reel FG has not been detected (at pin 60 of IC401) during 5 rotations of the capstan in the capstan driving mode.

7302 TU TAPE SLACK DURING CAPSTAN DRIVE

- •VCR operation : The AUTO OFF mode is initiated.
- •Cause : The timing belt is cut or one of the reel control parts in the mechanism is malfunctioning.
- •Detection method : When the TU reel FG has not been detected (at pin 59 of IC401) during 5 rotations of the capstan in the capstan driving mode.

7305 NO TU REEL ROTATION DURING UNLOADING

- •VCR operation : The AUTO OFF mode is initiated.
- •Cause : Malfunction of the cassette housing switch or cassette housing motor.
- •Detection method : When the TU reel rotation detected (at pin 59 of IC401) during unloading is less than 1/2 turn.

1.17 ANALYSIS OF BLOCK NOISE (SYMPTOMS: POOR VIDEO, ABSCNCE OF AUDIO)

1.17.1 Analysis Flow Chart

In case of trouble, perform troubleshooting using the following flow chart.

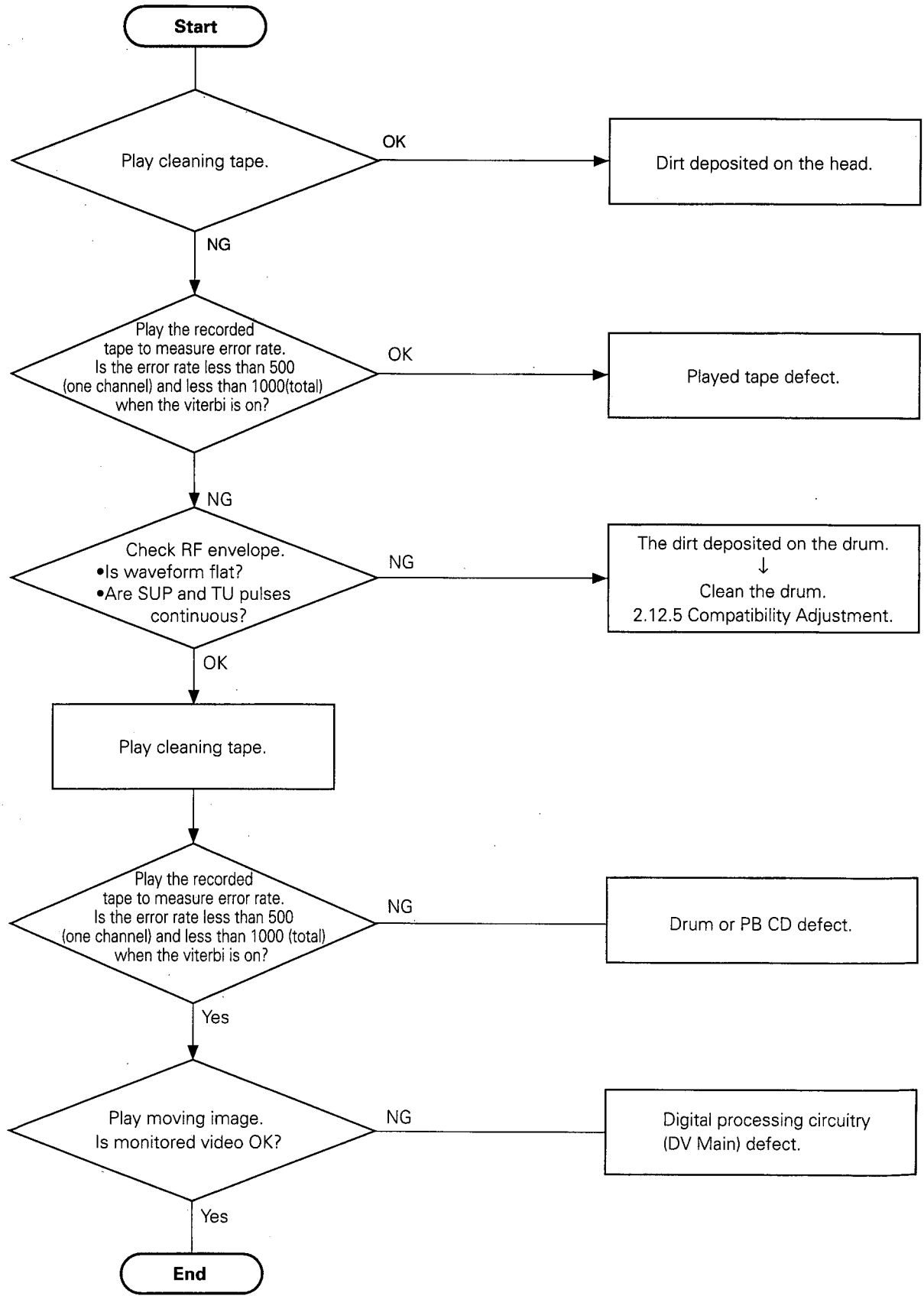

1.17.2 RF Envelope Check

Symptom Observed on Monitor Screen	RF envelope	Audio, etc.	Possible Causes
Block noise on left 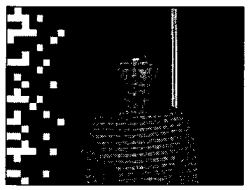	SUP dropout 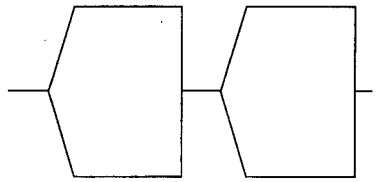	• No audio output. • Intermittent audio.	• Supply guide roller adjustment failure. • Dirt on supply side of drum.
Block noise on right 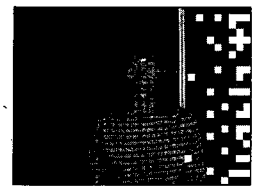	TU dropout 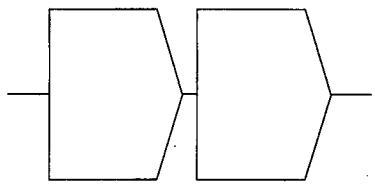	• Timecode not counted.	• Take-up guide roller adjustment failure. • Dirt on take-up side of drum.
One CH frozen 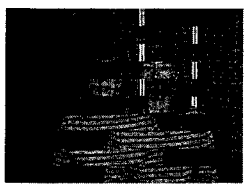	No video output from one CH 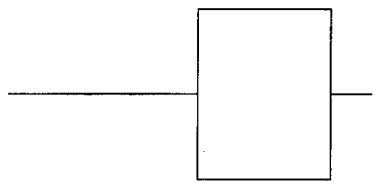	• Audio is output.	• Dirt attached on one CH of head. • Drum assembly defective. • PR & MDA board IC901 defective.
Frozen 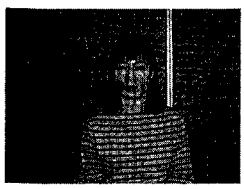	Low level 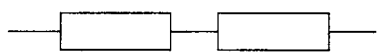	• No audio output.	• Dirt attached on head. • Drum assembly defective.

The RF envelope condition can be confirmed to a certain degree in the Error Rate adjustment display.

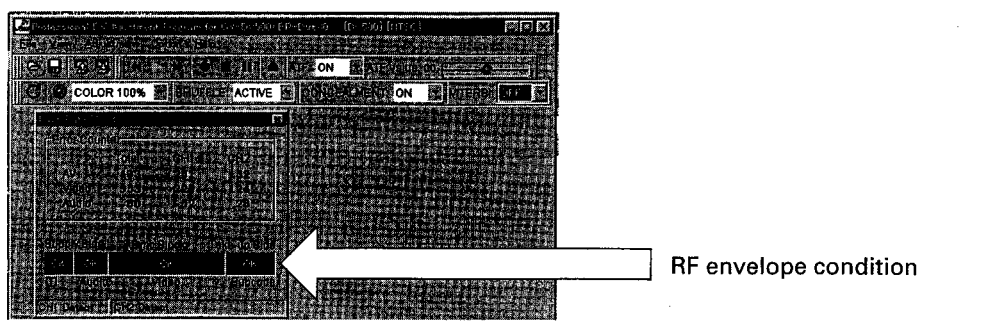

SECTION 2
MECHANICAL ADJUSTMENTS

2.1 BERORE ADJUSTMENTS

2.1.1 Precautions

1) Be sure to apply a screw securing torque when attaching a part.
   The securing torque should be 0.04 N-m (0.4 kgf-cm) unless otherwise specified.
2) Always unplug the power cord of the set before attaching, removing or soldering a part.
3) When unplugging a connector, do not pull the wire but grasp the connector body.
4) Do not make an adjustment or rotate a potentiometer blindly while the source of trouble is not identified.
5) Before adjusting electrical circuitry, be sure to wait for more than 10 minutes after turning the power on.

2.1.2 Measuring instruments required for adjustments

Instrument	Condition
Oscilloscope	Calibrated instrument with measuring bandwidth of 100 MHz or more.
Personal computer	Microsoft Windows 95 environment, Pentium 133 MHz or better, Memory 16 MB or more.

Table 2-1-1

2.1.3 Equioment required for adjustments

1 DV 12 V power supply(AA-G10/AA-P250) Output capability of 3 A or more. 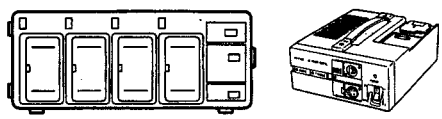	7 Slit washer attaching tool YTU94121A 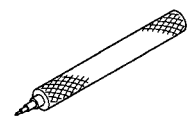
2 Alignment tape MC-1 (NTSC) MC-2 (PAL) 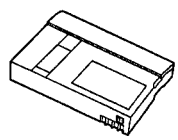	8 Connector cable PTU94018A 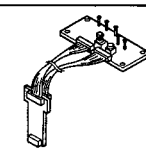
3 DV tape For use in self-recording/playback. (60 ME) 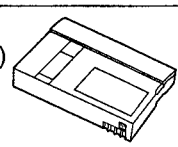	9 PC cable QAM0099-001 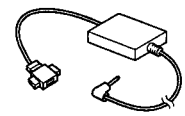
4 Cassette torque meter YTU94150A 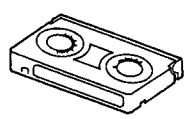	10 Adjustment software PLSC1304 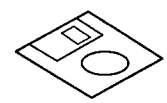
5 Guide screwdriver YTU94085 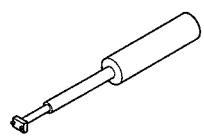	11 Chip IC replacement tool PTS40844-2 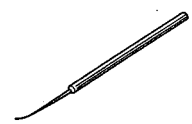
6 Torque screwdriver YTU94088 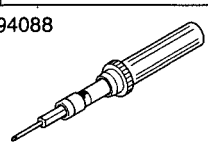	YTU94088-003 Replaceable bit (long type)

Table 2-1-2

2.2 BASICS OF MECHANISM DISASSAMBLY/ASSEMBLY

2.2.1 Assembly mode

The disassembly and assembly of the mechanism can be done in the ASSEMBLY mode (see Table 2-2-1).
The ASSEMBLY mode is provided in the intermediate position between C-IN and S.FF. As the C-IN (Cassette IN) mode is usually set when a cassette tape is ejected, the ASSEMBLY mode should be entered after entering the C-IN mode. To set the ASSEMBLY mode, apply 3 V DC to the electrodes at the top of the loading motor shown in Fig. 2-2-1. The ASSEMBLY mode is set when the markings (red) on two gear teeth of the rotary encoder are aligned with the confirmation holes.

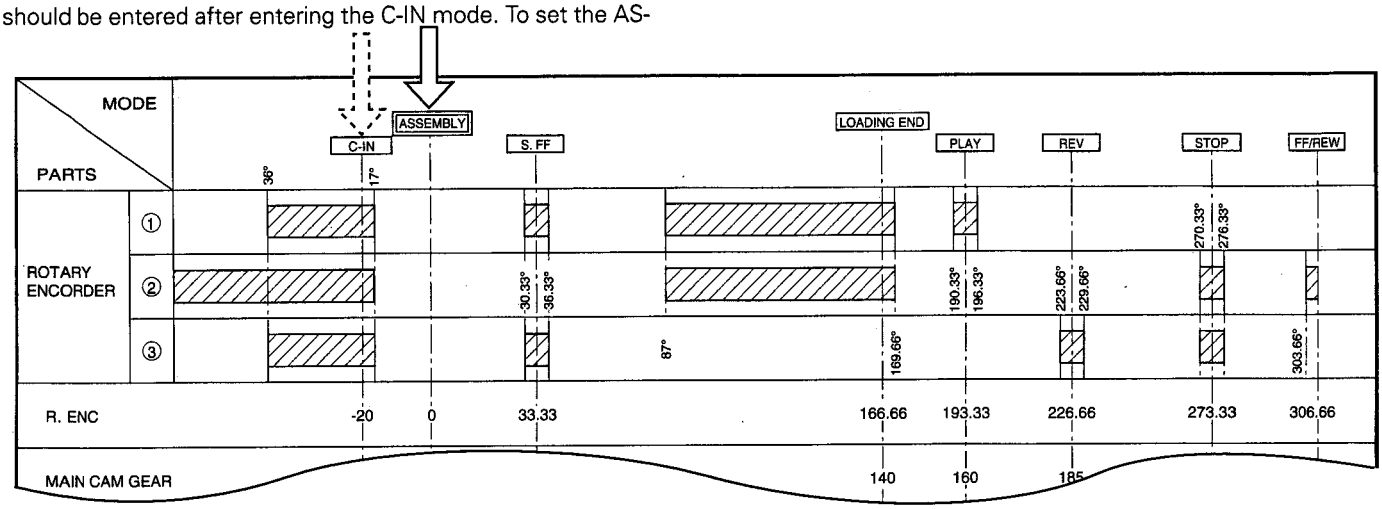

Table 2-2-1

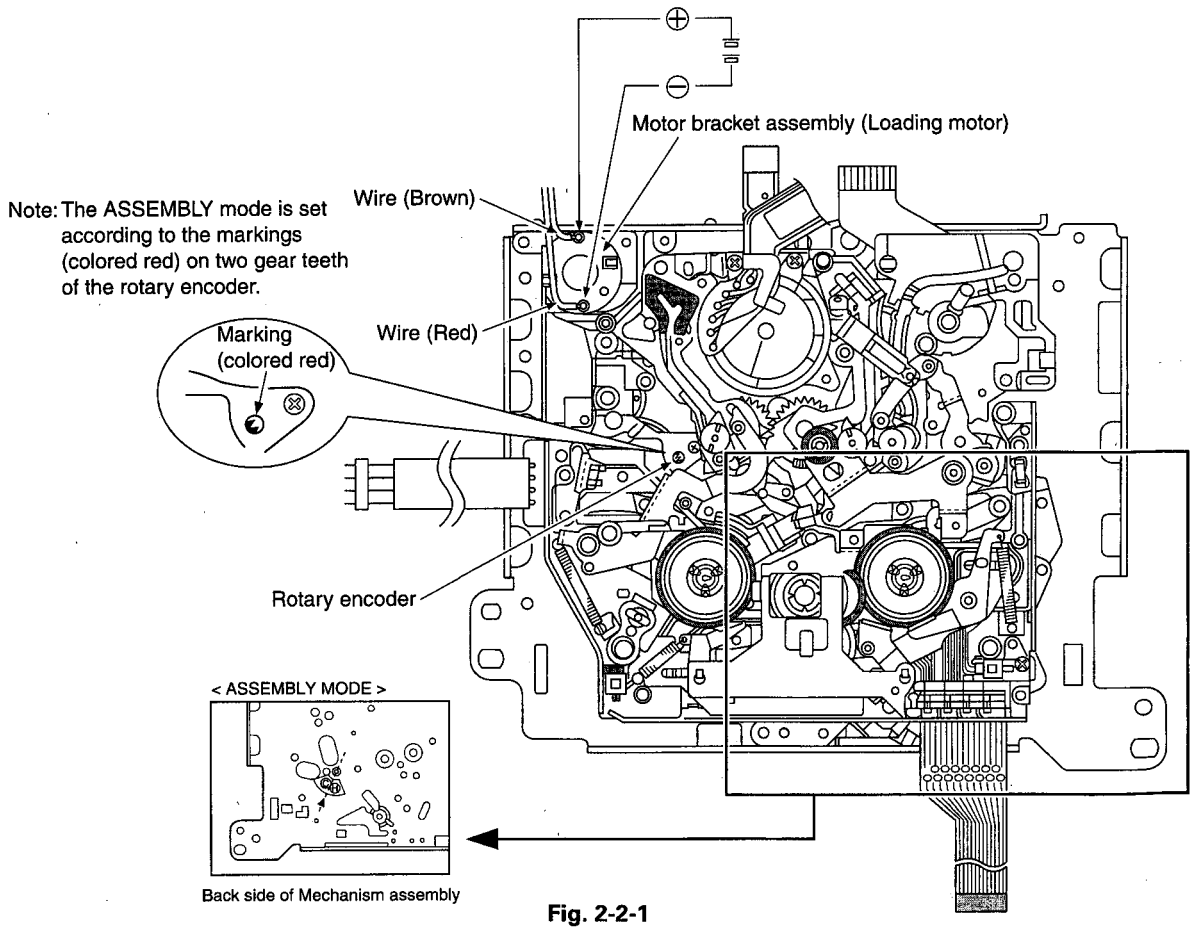

Fig. 2-2-1

2.2.2 Mechanism modes

The mechanism has 6 modes as shown in Table 2-3-1.
The current mode can be confirmed by observing the markings on the sub-cam gear and the ▲ mark on the main deck at the back side of mechanism assembly. See Figs. 2-2-2 to -7.

1. Mechanism mode confimation

<C-IN : Ⓒ>

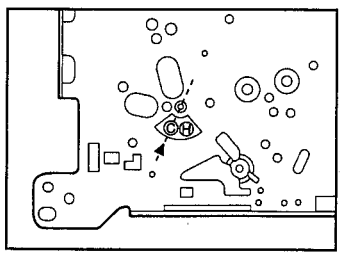

Fig. 2-2-2

<S-FF : Ⓗ>

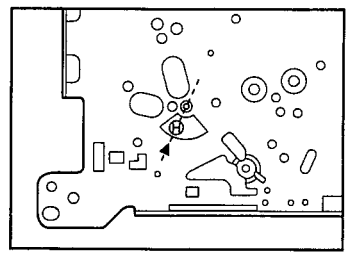

Fig. 2-2-3

<PLAY : Ⓟ>

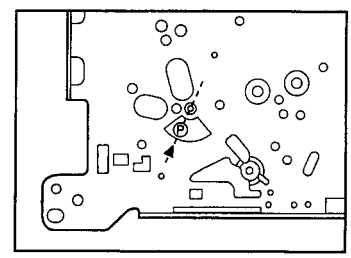

Fig. 2-2-4

<REV : Ⓡ>

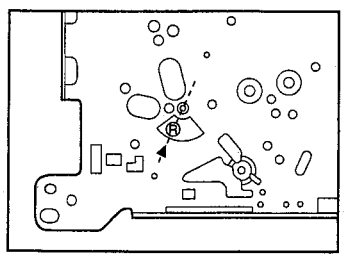

Fig. 2-2-5

<STOP : Ⓢ>

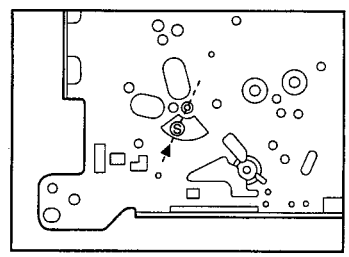

Fig. 2-2-6

<FF/REW : Ⓕ>

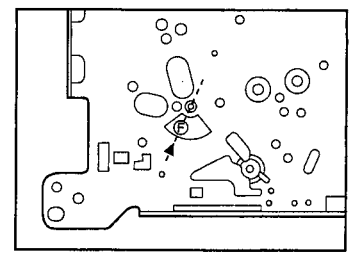

Fig. 2-2-7

2.3 MECHANISM TIMIN CHART

See following table (Table 2-3-1).

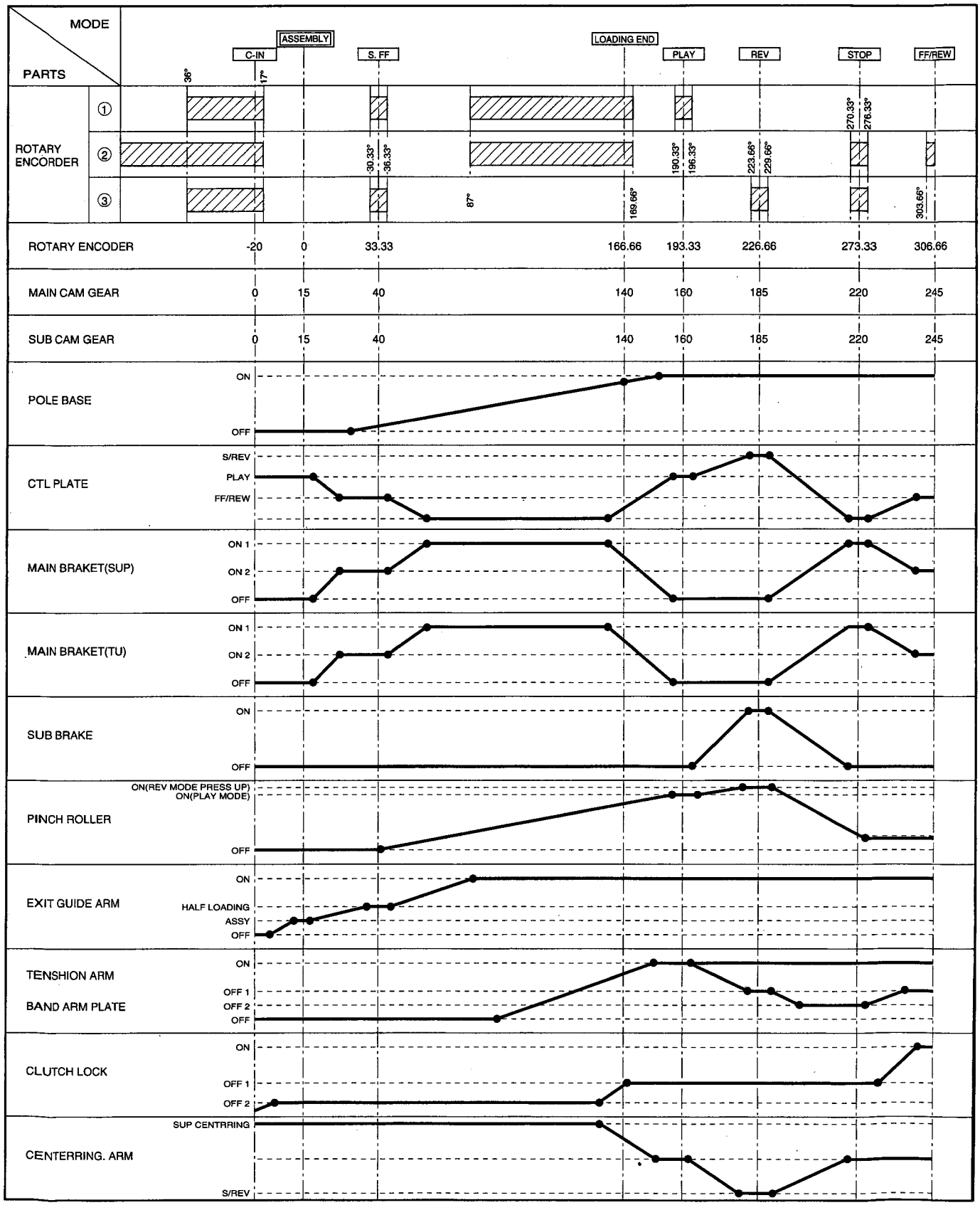

Table 2-3-1

2.4 MAINTENANCE AND INSPECTION OF MAJOR PARTS

Periodical inspection and maintenance are requisite to maintain the initial performance and reliability of the product. Table 2-4-1 (Maintenance & Inspection List) has been compiled assuming standard operating conditions, and the specifications in the table are greatly variable depending on the actual operating environment and conditions. Remember that, if the maintenance and inspection are not enforced properly, the operating hours of the product will not only reduce considerably but other unfavorable influences may produce.

Rubber parts may deform or degrade after long period of storage even if they are not used in this period.

The service life of the drum is variable depending on the tape used and operating environment.

2.4.1 Layout of Major Parts

To attach the Active Head Cleaner Assembly, refer to "1.7.2. Disassembling the Rear Part of the Unit".

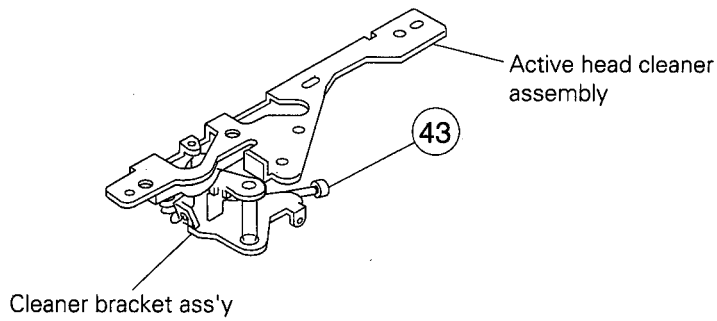

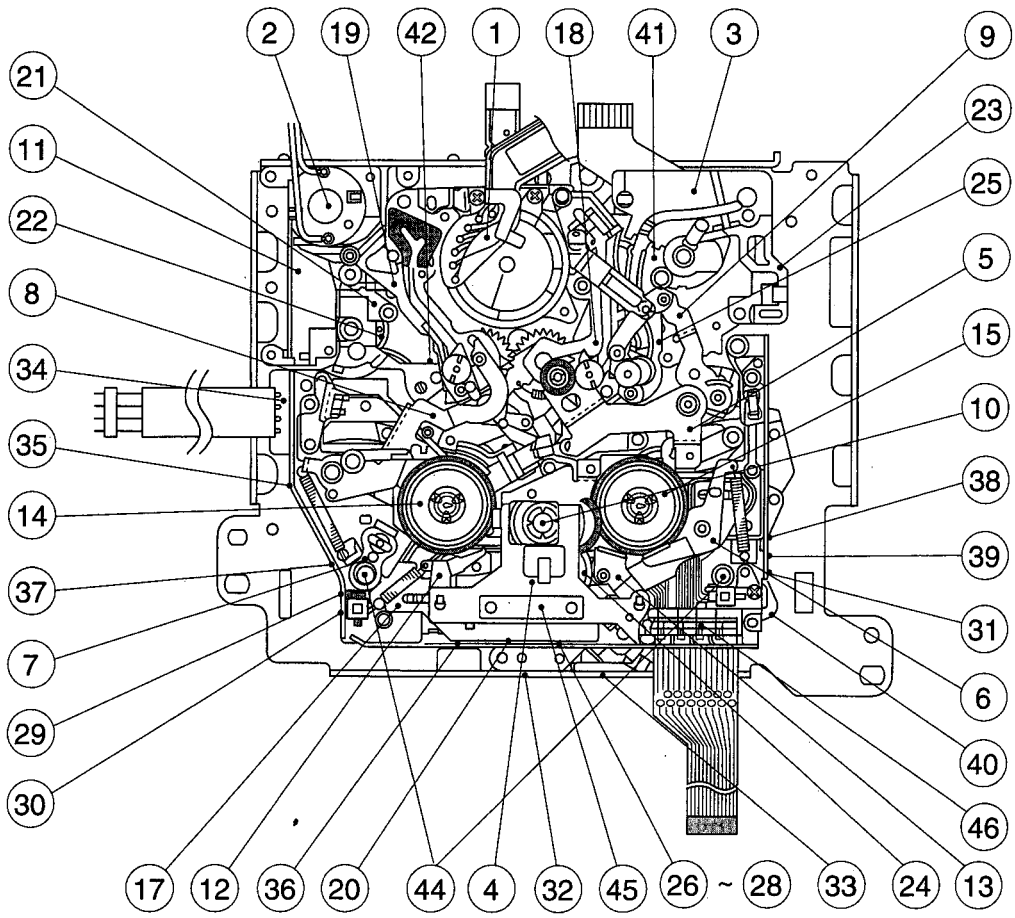

2.4.2 Maintenance and insoection list

1) The 6000 H maintenance consists of a replacement of the entire mechanism assembly.
2) When mounting the capstan motor on the main deck, control of the verticality is required. Therefore, when the capstan motor reaches the end of its service life, the entire mechanism assembly should be replaced.

	Part Name	Symbol No.	Operating Hours (DRUM Hour Meter)												Ref.
			500	1000	1500	2000	2500	3000	3500	4000	4500	5000	5500	6000	
1	Tape transport parts		★	★	★	★	★	★	★	★	★	★	★	–	
2	㉑ ENT. guide base assembly	M6 43	★	○★	★	●	★	○★	★	●	★	○★	★	–	2.7.14
3	⑧ Tension arm sub-assembly	M6 40	★	○★	★	●	★	○★	★	●	★	○★	★	–	2.7.8
4	⑲ Guide rail (S) assembly	M6 22	★	○★	★	●	★	○★	★	●	★	○★	★	–	2.7.12
5	⑮ Guide rail (T) assembly	M6 23	★	○★	★	●	★	○★	★	●	★	○★	★	–	2.7.12
6	③ Middle catcher assembly	M6 24	★	○★	★	●	★	○★	★	●	★	○★	★	–	2.7.5
7	⑦ Capstan shaft	M6 4	★	★	★	★	★	★	★	★	★	★	★	–	
8	⑤ Pin roller arm assembly	M6 44	★	○★	★	●	★	○★	★	●	★	○★	★	–	2.7.3
9	⑨ Exit guide arm assembly	M6 43	★	○★	★	●	★	○★	★	●	★	○★	★	–	2.7.4
10	① Drum assembly	M6 50	★	★	★	●	★	★	★	●	★	★	★	–	2.7.2
11	㊶ Capstan motor	M6 4	–	–	–	–	–	○	○	○	○	○	○	●	–
12	㉕ Reel drive pulley assembly	M6 33	–	○△	–	●△	–	○△	–	●△	–	○△	–	–	2.7.15
13	㉔ Center gear assembly	M6 34	○	●△	○	●△	○	●△	○	●△	○	●△	○	–	2.7.14
14	㉓ Timing belt	M6 11	○	●	○	●	○	●	○	●	○	●	○	–	2.7.14
15	㉘ Clutch lock gear (1) ㉗ Clutch lock gear (2)	M6 12 M6 14	–	○△	–	●△	–	○△	–	●△	–	○△	–	–	2.7.15
16	⑥ Sub-brake assembly	M6 36	–	○	–	●	–	○	–	●	–	○	–	–	2.7.10
17	⑫ Main brake (S) assembly	M6 38	–	○	–	○	–	○	–	○	–	○	–	–	2.7.10
18	⑬ Main brake (T) assembly	M6 37	–	○	–	●	–	○	–	●	–	○	–	–	2.7.10
19	⑭ 15Reel disk assemblies	M6 39	–	○	–	●△	–	○	–	●△	–	○	–	–	2.7.11
20	⑦ Band arm plate assembly	M6 41	–	○	–	●	–	○	–	●	–	○	–	–	2.7.8
21	⑩ Swing arm assembly	M6 42	○	●	○	●	○	●	○	●	○	●	○	–	2.7.7
22	㉒ Worm wheel 2	M6 3	–	○	–	●	–	○	–	●	–	○	–	–	2.7.14
23	② Motor bracket assembly	M6 20	–	○	–	●	–	○	–	●	–	○	–	–	2.7.2
24	㉞ Rotary encoder assembly	M6 21	–	○	–	●	–	○	–	●	–	○	–	–	2.7.18
25	㊲ Centering arm assembly	M6 26	–	○	–	●	–	○	–	●	–	○	–	–	2.7.18
26	㉟ Min cam	M6 8	–	○	–	●	–	○	–	●	–	○	–	–	2.7.18
27	㊳ Sub cam	M6 9	–	○	–	●	–	○	–	●	–	○	–	–	2.7.19
28	㊸ Cleaner assembly	M5 29	○	●	○	●	○	●	○	●	○	●	○	●	2.7.20
29	㊹ Cassette guide pin	M6 35	★	★	★	★	★	★	★	★	★	★	★	–	
30	㊺ Cassette guide	M6 35	★	★	★	★	★	★	★	★	★	★	★	–	
31	㊻ MIC contact	M6 35	★	★	★	★	★	★	★	★	★	★	★	–	
32	Mechanism assembly (including cassette housing assembly)	M6 1	–	–	–	–	–	–	–	–	–	–	–	●	

★: Clean with ethanol. ○: Check and replace if required. ●: Replace. △: Oil the shaft.
After replacing a part, apply lubricant to the required points.

Table 2-4-1

2.4.3 Cleaning

The tape transport system should be cleaned periodically. Be sure to clean the tape transport system upon receipt of a set for servicing, etc. To clean use a good quality fine-textured cloth moistened with ethyl alcohol.

1) When the video head is stained, the playback output decreases and a read error will not be able to be corrected by the error correction. If this occurs, the video will be interfered by block noise, the audio will not be output, and the video output will eventually be lost when the video head becomes extremely dirty. To clean the drum, while applying cleaning cloth (service part No. : KSMM-01) or high quality paper gently to the upper drum, rotate the upper drum in the normal (counterclockwise) rotation direction.
   The dirt deposited on the video head can be removed by playing a cleaning tape.

CAUTION

Do not move the cleaning paper while applying it to the video head. Otherwise, the video head may be damaged.

2) The lower drum tends to attract dirt on the leader section and the linearity cannot be guaranteed when the lower drum becomes extremely dirty. Particularly, the tape inlet and output sections gather dirt easily, causing symptoms such as dropout of the reproduced FM signal, deterioration of video quality and lack of audio output. In order to clean the leader section, rub a a cotton swab gently along its edge.

3) Stain of the tape transport system leads to tape damage. When magnetic powder or dirt penetrates inside the rollers, a rotation malfunction may affect the video. Clean the tape transport parts carefully using a cleaning cloth or cotton swab moistened with ethyl alcohol.

2.4.4 Oiling and Greasing

Table 2-4-2 shows the oil and greases used with the set.

Classification	Name	Part No.
Oil	Cosmo Hydro HV100	YTU94027
Grease	Maltemp SH-P	KYODO-SH-P
	Hanal	RX-410R

Table 2-4-2

1) Oiling should be performed periodically. Oil the shafts by referring to the maintenance table.
2) After replacing a part, grease the required points. For the parts to be greased see the exploded diagram in chapter 5, "DISASSEMBLY DRAWINGS AND PARTS LIST".
3) As Hanal separates over time, be sure to mix it (shake) well before use.
4) Take care not to leave grease or oil on the tape transport parts which come into contact with the tape or on the brake pads.
5) Take care not to apply too much oil or grease. The standard oiling quantity is one drop and the standard greasing quantity is the quantity with which the grease does not overflow.

2.5 PERIODICAL MAINTENANCE

Perform maintenance at the correct times in accordance with the maintenance table.
Fig. 2-5-1 shows the flow chart of periodical maintenance procedures at different operating hours.

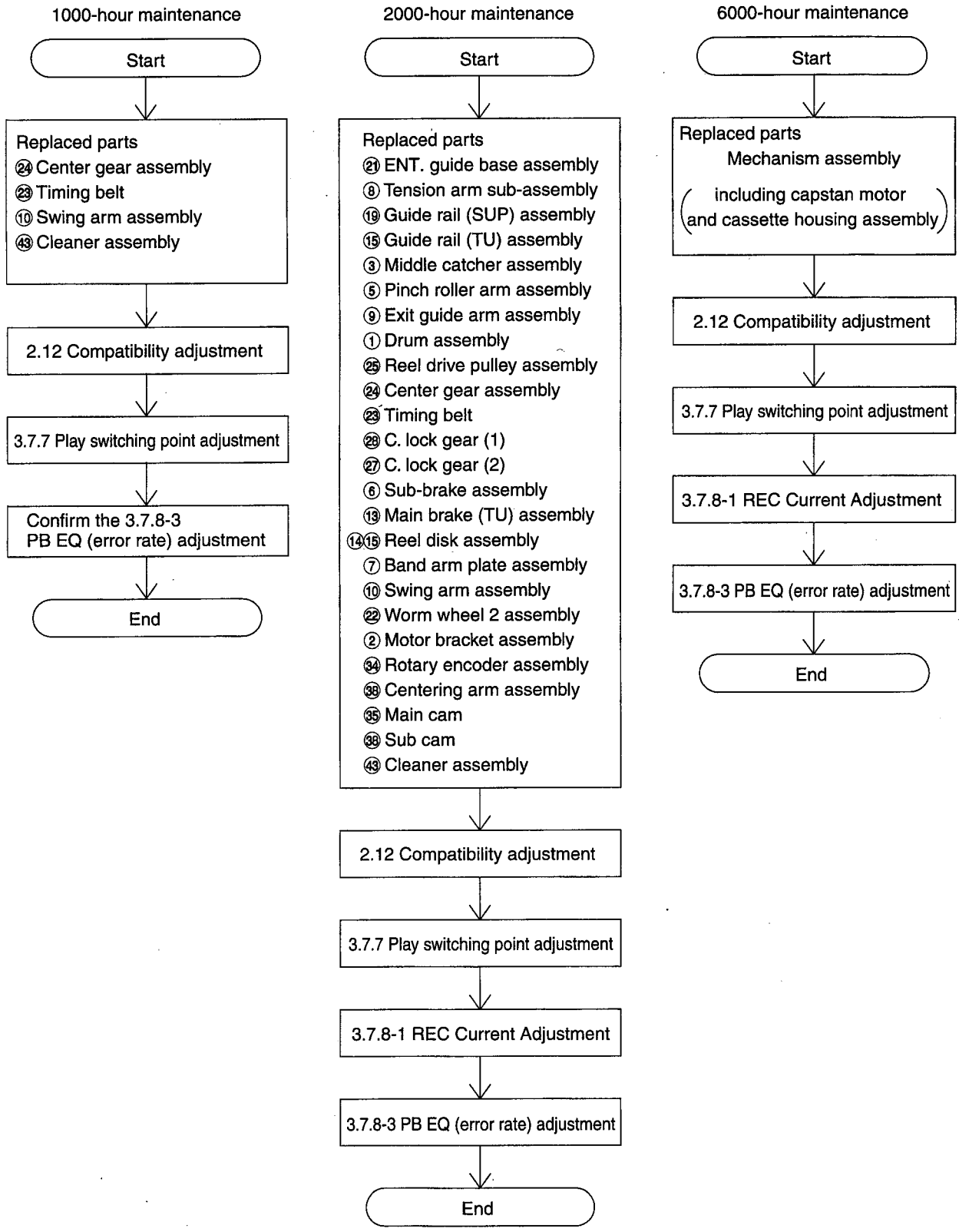

Fig. 2-5-1

2.6 DISASSEMBLY/ASSEMBLY OF MECHANISM ASSEMBLY

2.6.1 Assembly/Disassembly

The following table shows the mechanism assembly/disassembly procedures.

① : Names of the disassembled/assembled parts.
② : Items of disassembly.
③ : Parts to be removed for disassembly, such as screws, washers and springs, and points.

Symbol	Name or Point
S	Screw
W	Washer
P	Spring
*	Connector, lock (L), soldering (SD), shield, etc.

2.6.2 Screws and Washers Used in Mechanism Assembly Disassembly/Assembly

Table 2-6-1 shows the symbols, designs, part numbers and colors of the screws and washers used with the Mechanism assembly.
When disassembling or assembling the Mechanism assembly, be sure to attach the correct screws and washers by referring to the following table.

Symbol	Design	Part No.	Color
(S1)		QYSDSP2005Z	Gold
(S2)		YQ43893	Silver
(S3)		YQ43893-7	Black

Symbol	Design	Part No.	Color
W1		YQ44246	Red
W2		YQ44246-3	Black
W3		YQ43933-2	Black

Fig. 2-6-1

	Part Name	Step	Points	Remark
1	Ⓐ Cassette housing assembly, Ⓑ Main deck assembly	1	2(S1), (L1) to (L5)	
2	① Drum assembly	2	3(S2)	
3	② Motor bracket assembly	2	4(S2)	
4	③ Middle catcher assembly	3	3(S2)	
	↑ ①	↑ ②	↑ ③	

2.6.3 Mechanism Assembly Disassembly Procedure Table

	Part Name	Item	Points	Remark
1	Ⓐ Cassette housing assembly	1	2 (S1), (L1) to (L5)	
2	① Drum assembly	2	3 (S2)	
3	② Motor bracket assembly	2	4 (S2)	
4	③ Middle catcher assembly	5	3 (S2)	
5	④ Reel cover assembly	6	(S2), 2 (L6)	
6	⑤ Pinch roller arm assembly	3	(W1), (L7)	
7	⑥ Sub-brake assembly	10	(P1), (W1), (L8)	
8	⑦ Band arm plate assembly	8	(S3), (L9), (P2), (W2)	
9	⑧ Tension arm sub-assembly	8	(P3)	
10	⑨ Exit guide arm assembly	4	(W1)	
11	⑩ Swing arm assembly	7	–	Position alignment
12	⑪ Sub-deck assembly	9	4 (S2)	Position alignment
13	⑫ Main brake (SUP) assembly	10	(P4), (L10)	
14	⑬ Main brake (TU) assembly	10	(P5), (L11)	
15	⑭ Reel base assembly (SUP)	11	–	
16	⑮ Reel base assembly (TU)	11	–	
17	⑯ Prism	7	(S2)	
18	⑰ Control plate	11	(2 (L12)	
19	⑱ Guide rail (TU) assembly	12	4 (S2)	Position alignment
20	⑲ Guide rail (SUP) assembly	12	(S2), 2 (L13)	Position alignment
21	⑳ Base plate assembly	13	(S2), 2 (L14)	
22	㉑ ENT. guide base assembly	14	(S2)	
23	㉒ Worm wheel 2	14	–	Phase alignment
24	㉓ Timing belt	14	–	
25	㉔ Center gear assembly	14	–	
26	㉕ Reel drive pulley assembly	15	(W1)	
27	㉖ Push plate	15	(W1)	
28	㉗ Clutch lock gear (2)	15	(W3)	
29	㉘ Clutch lock gear (1)	15	(P6)	
30	㉙ Tension control arm assembly	16	(L15)	Position alignment
31	㉚ Brake control arm assembly	16	(W1), (L16)	Position alignment
32	㉛ Charge arm assembly	16	(L17)	Position alignment
33	㉜ Connect gear 2 (SUP)	17	(S2)	(Phase alignment)
34	㉝ Connect gear 2 (TU)	17	(S2)	(Phase alignment)
35	㉞ Rotary encoder assembly	18	2 (S2)	Phase alignment
36	㉟ Main cam	18	(W1)	Phase alignment
37	㊱ Arm gear 1 assembly	18	Collar	Position alignment
38	㊲ Centering arm assembly	18	(L18)	Position alignment
39	㊳ Sub cam	19	(S2)	Phase alignment
40	㊴ Arm gear 2 assembly	19	–	Position alignment
41	㊵ Clutch lock lever assembly	19	(L19)	Position alignment
42	㊶ Capstan motor			Change with mechanism assembly
43	㊷ Drum base deck		3 (S2)	

Table 2-6-2

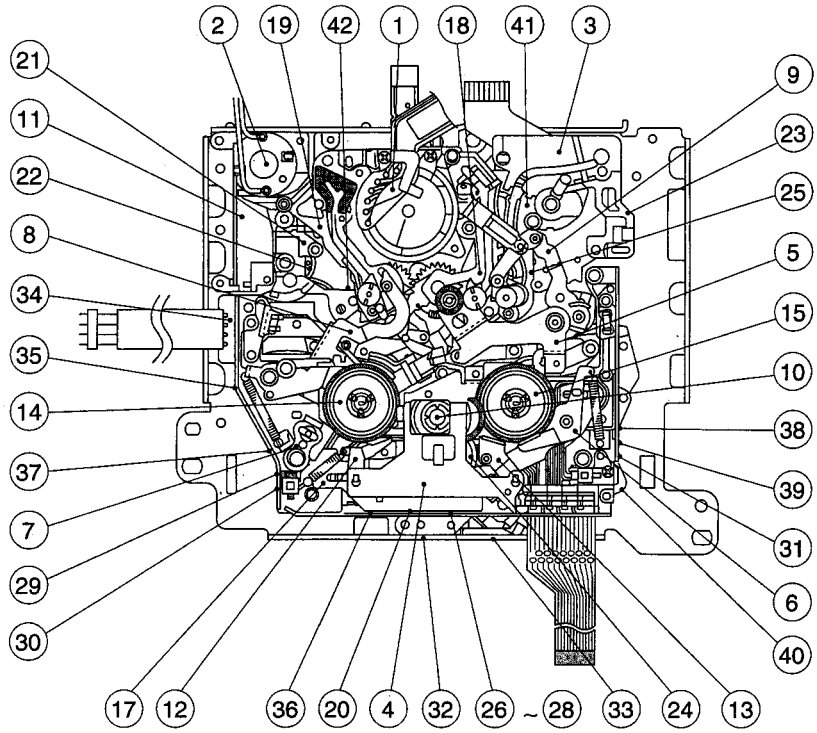

Fig. 2-6-1

2.6.4 Mechanism disassembly/assembly procedure chart

<How to read the chart>

- The following chart shows the disassembly/assembly procedures by dividing them into blocks A to I.
- To remove the tension arm sub-assembly which is located in block D; start disassembly from block A. The tension arm sub-assembly can be removed as the fourth operation after the removals of the cassette housing assembly (block A) → reel cover assembly (block B) → band arm plate assembly (block C).
- The parts enclosed in thick frames are the maintenance parts listed in the maintenance table.
- For details on the disassembly/assembly, see section 2.7, "Replacement of Major Parts".

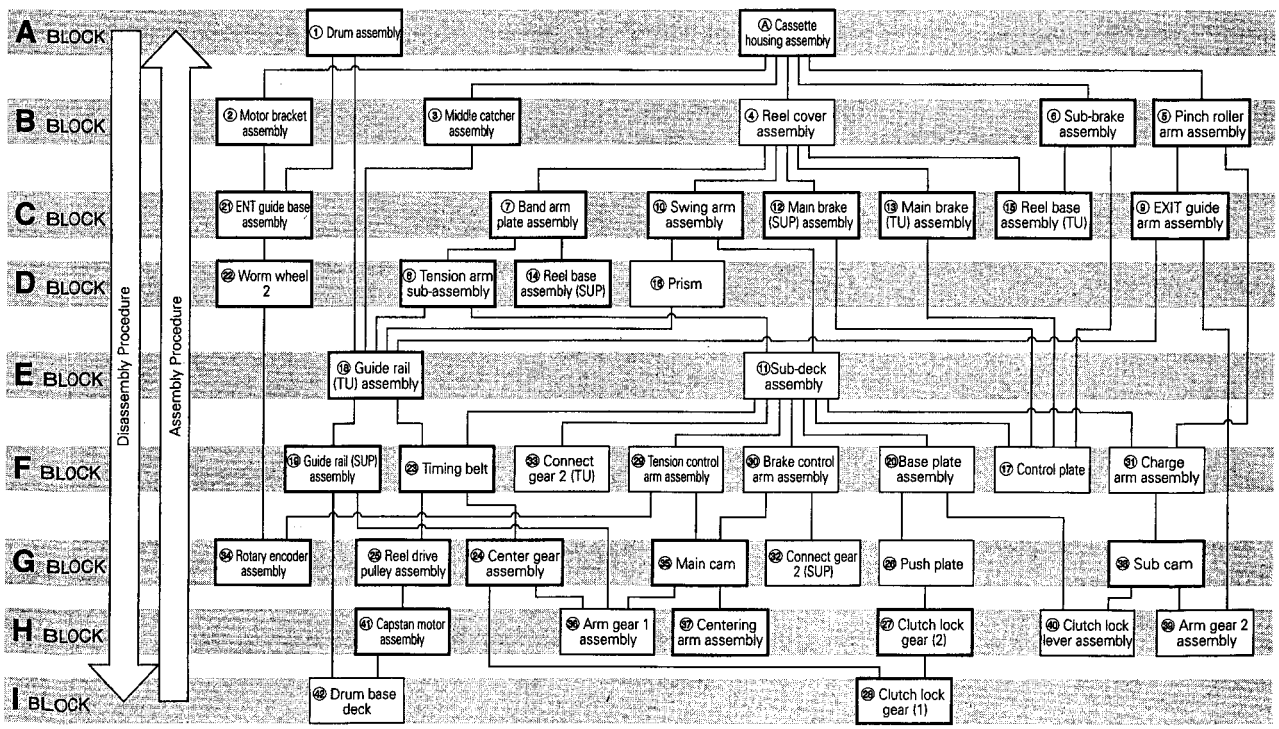

Fig. 2-6-2

No.	Item	Reference picture/drawing	Procedure

2.7 REPLACEMENT OF MAJOR PARTS

- Make sure that the mechanism is in the ASSEMBLY mode before proceeding to disassembly or assembly. (See section 2.1, "Assembly Mode".)
- Screws must always be tightened using a torque screwdriver and at the specified torque.

1	Ⓐ Cassette housing assembly 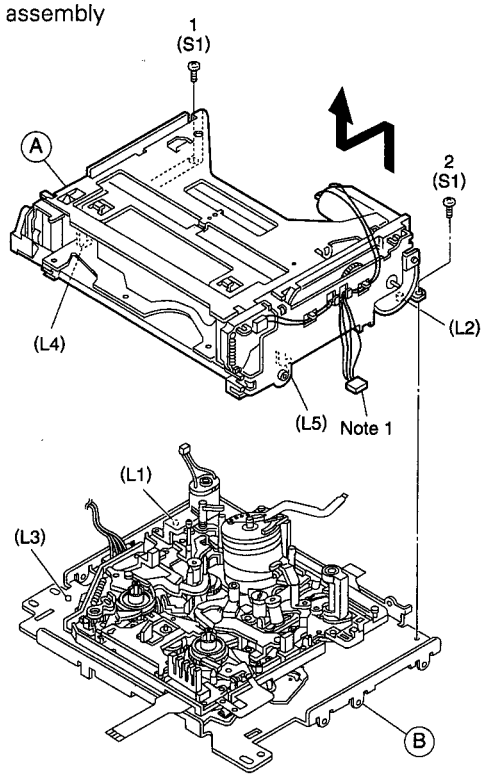 **Fig. 2-7-1**	**<Removal>** 1) Remove the 2 screws (S1) then take out the cassette housing by sliding it upward and toward the front. **<Attaching>** 1) Reverse the removal procedure.
2	① Drum assembly, ② Motor bracket assembly 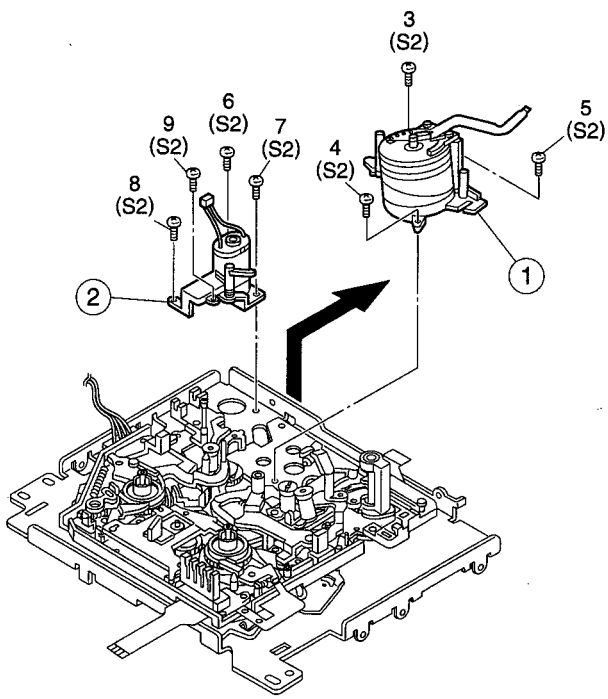 **Fig. 2-7-2**	**<Removal>** ① Drum assembly 1) Remove the 3 screws (S2) and take out the assembly. ② Motor bracket assembly 1) Remove the 4 screws and take out the motor bracket assembly. **<Attaching>** 1) Reverse the removal procedure

No.	Item	Reference picture/drawing	Procedure
3	⑤ Pinch roller arm assembly	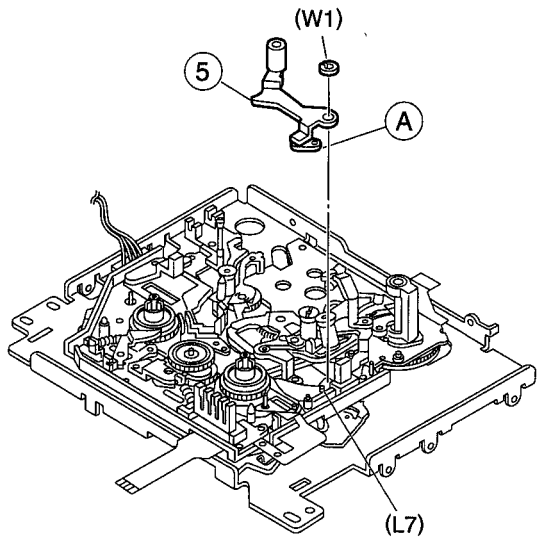 Fig. 2-7-3	**<Removal>** 1) Remove the washer (W1) and pull out the assembly. **<Attaching>** 1) Fit the pinch roller arm assembly Ⓐ into the boss (L7) of the charge arm assembly. 2) Attach the washer (W1).
4	⑨ Exit guide arm assembly	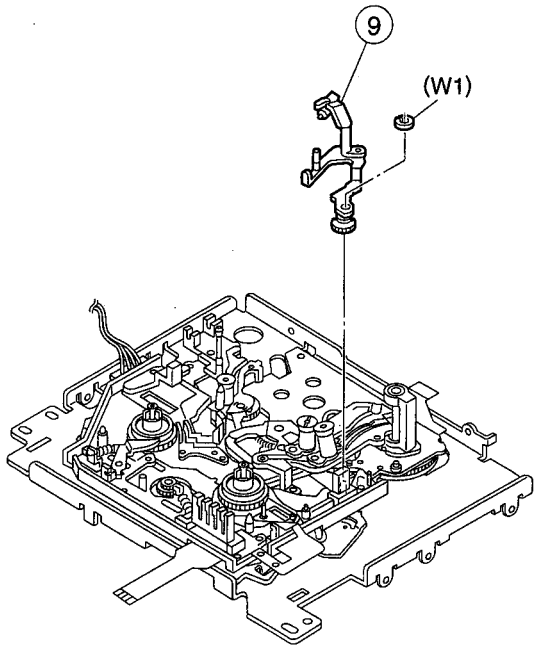 Fig. 2-7-4	**<Removal>** 1) Remove the washer (W1) and pull out the assembly. **<Attaching>** 1) Reverse the removal procedure.

No.	Item	Reference picture/drawing	Procedure
5	③ Middle catcher assembly	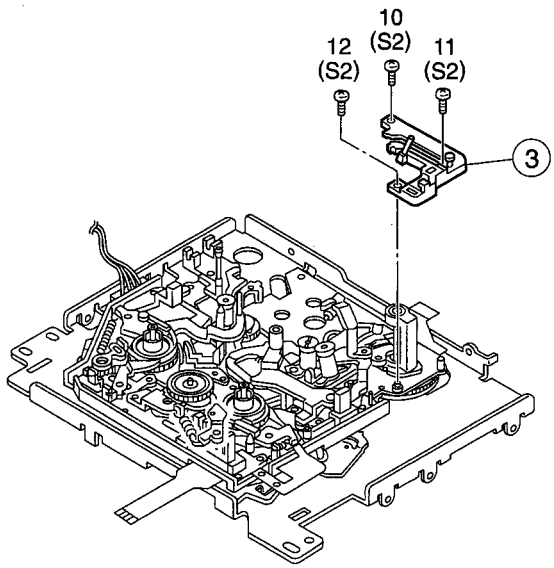 Fig. 2-7-5	**<Removal>** 1) Remove the 3 screws (S2) and remove the assembly. **<Attaching>** 1) Reverse the removal procedure.
6	④ Reel cover assembly	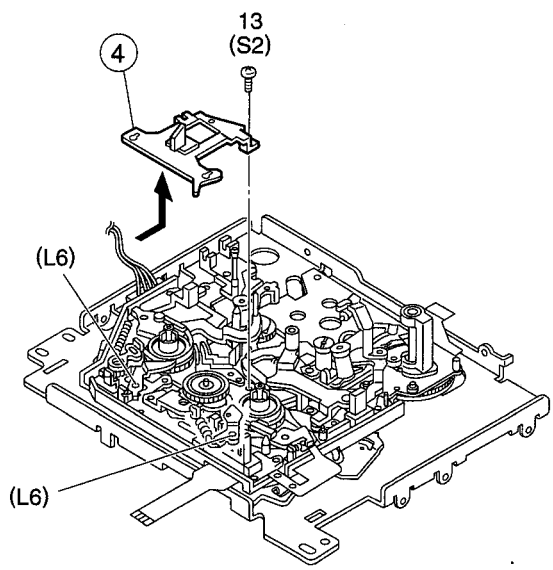 Fig. 2-7-6	**<Removal>** 1) Remove the screw (S2). 2) Slide the assembly toward the drum and lift the assembly up to remove it. **NOTE** · **After having removed the reel cover, take care because the parts located below the reel cover tend to slip out easily.** **<Attaching>** 1) Insert the reel cover into (L6) and attach by reversing the removal procedure.

No.	Item	Reference picture/drawing	Procedure
7	⑩ Swing arm assembly	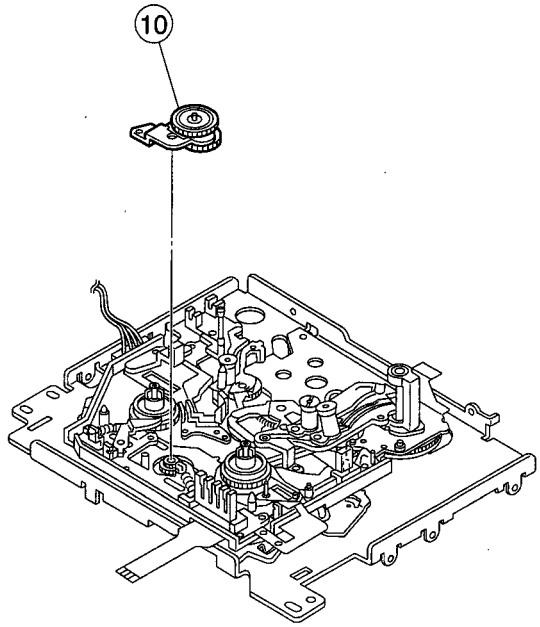 Fig. 2-7-7	**<Removal>** 1) Pull the assembly upward. **<Attaching>** 1) Reverse the removal procedure.

No.	Item	Reference picture/drawing	Procedure
8	⑦ Band arm plate assembly, ⑧ Tension arm sub-assembly	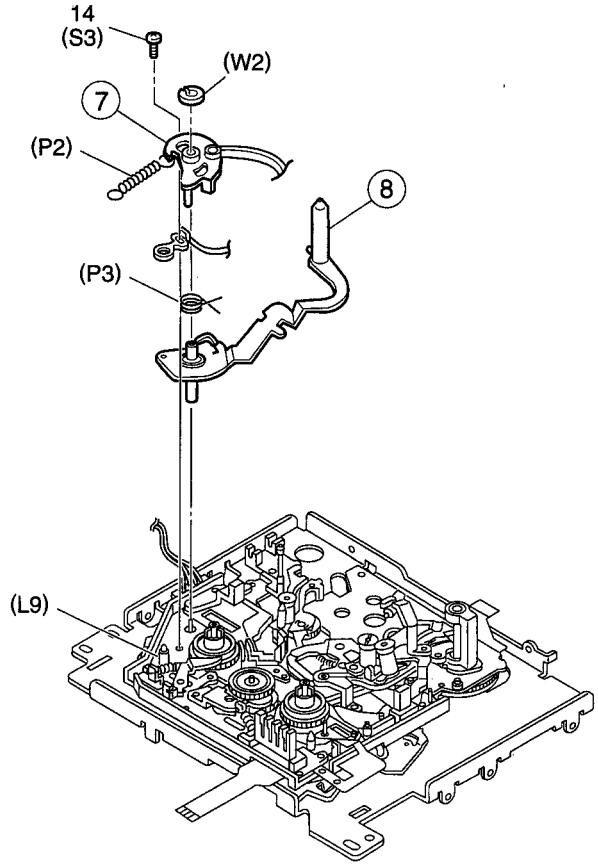 **Fig. 2-7-8(a)** 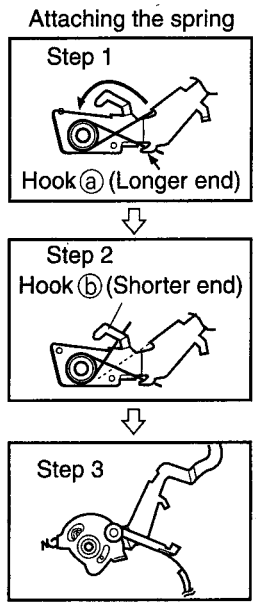 **Fig. 2-7-8(b)**	**<Removal>** 1) Remove the washer (W2). 2) Remove the screw (S3). 3) Remove the spring (P2). 4) Remove the band arm plate assembly and tension arm sub-assembly. **NOTE** **Be careful not to lose the spring (P3).** **<Attaching>** 1) Attach the spring (P3) to the tension arm sub-assembly. Engage the longer end of spring to hook ⓐ and the shorter end to hook ⓑ as shown in Fig. 2-7-8(b). 2) Attach the tension arm sub-assembly. 3) Attach the band arm plate assembly. 4) Clamp with the screw (S3) and washer (W2). 5) Attach the spring (P2) to (L9). **NOTE** After attaching, ensure that the band arm assembly can rotate in the direction of the arrow as shown in Fig. 2-7-8(c). 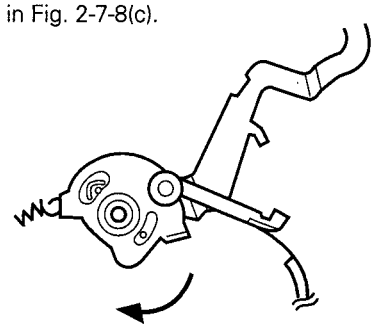 **Fig. 2-7-8(c)** 6) After attaching, adjust the tension.

No.	Item	Reference picture/drawing	Procedure
8	<Tension arm sub-assembly position adjustment>	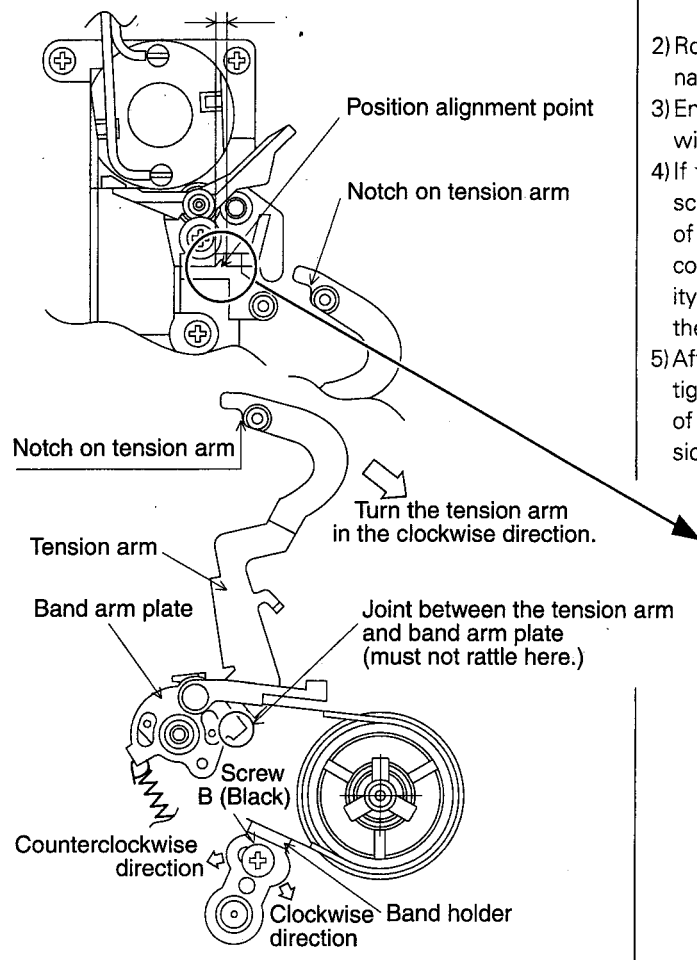 Fig. 2-7-8(d)	1) Without loading a tape, set the mechanism mode to PLAY mode. To switch the mode, rotate worm wheel 2 while the motor bracket assembly is disengaged (see 2.2, "Mechanism Modes"). 2) Rotate the tension arm slightly clockwise to eliminate production of rattle with the band arm plate. 3) Ensure that the notch on the tension arm is located within area A. (See Fig. 2-7-8(e).) 4) If the tension arm is not located in area A, loosen screw B (black) lightly and fine-adjust the position of the band arm plate assembly. Turn the screw counterclockwise to move the tension arm extremity toward the right or clockwise to move it toward the left. 5) After the adjustment, clamp the band holder by tightening screw B (black) (with a securing torque of 5.88 Nm, or 0.6 kgf-cm). Then adjust the tension arm position again. 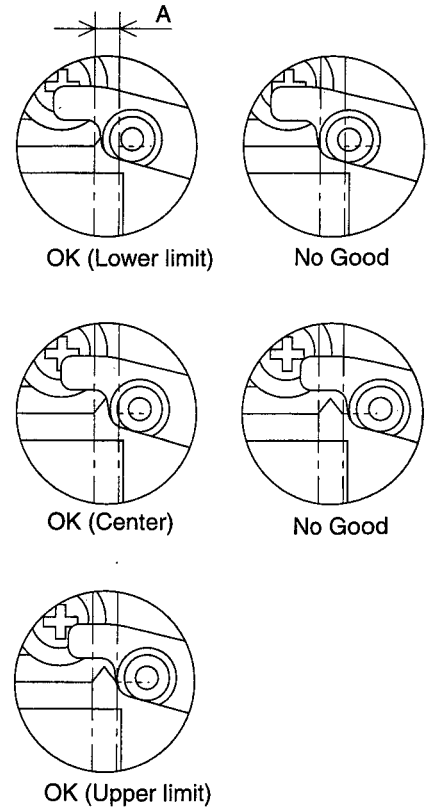 Fig. 2-7-8(e)

No.	Item	Reference picture/drawing	Procedure
9	⑪ Sub-deck assembly	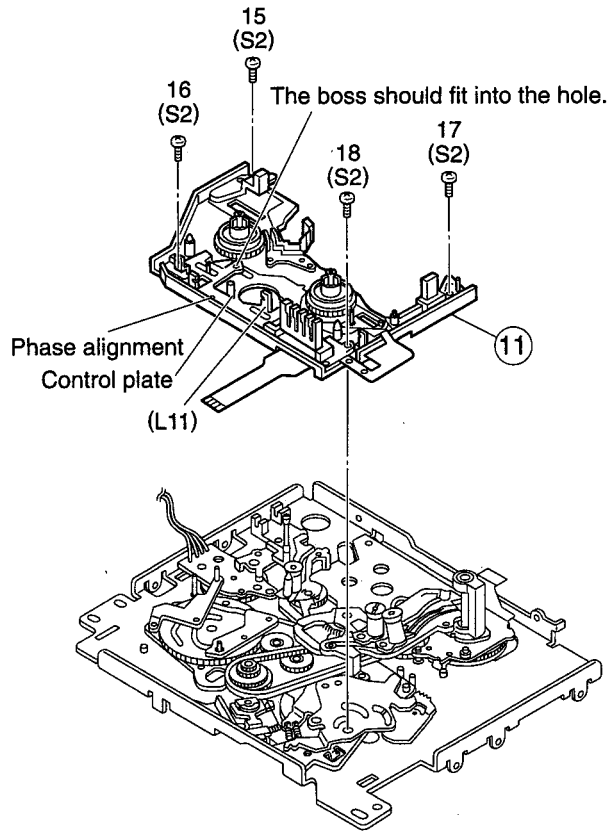 Fig. 2-7-9	**<Removal>** 1) Remove the 4 screws (S2) and pull out the assembly. **<Attaching>** 1) While sliding the control plate toward the left, attach the sub-deck assembly. **NOTE** · **Attach by aligning the phase holes of the main deck assembly and control plate.** 2) Clamp with 4 screws (S2).
10	⑫ Main brake (SUP) assembly, ⑬ Main brake (TU) assembly, ⑥ Sub-brake assembly	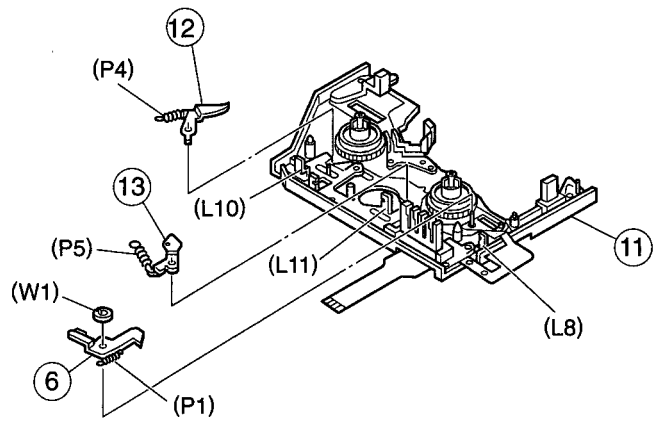 Fig. 2-7-10	**<Removal>** **Main brake (SUP) (TU) assembly** 1) Remove the spring by disengaging its ends from the hooks (L10) (L11). **Sub-brake assembly** 1) Remove the washer (W1). 2) Remove the spring by disengaging it from the hook (L8). **<Attaching>** 1) Reverse the removal procedure.

No.	Item	Reference picture/drawing	Procedure
11	⑭ Reel base (SUP) assembly, ⑮ Reel base (TU) assembly, ⑰ Control plate, ⑯ Prism	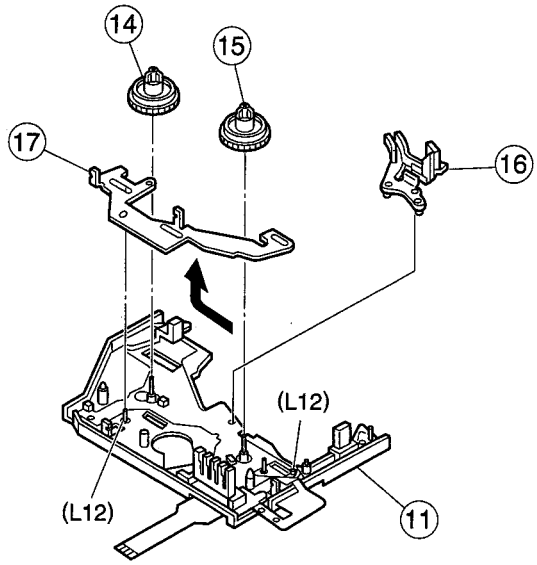 Fig. 2-7-11	**<Removal>** 1) Pull up each assembly to remove it. The control plate can be removed by sliding it toward the left as shown by the arrow. 2) Remove the screw (S2) to remove the prism. **<Attaching>** 1) Reverse the removal procedure.
12	⑱ Guide rail (TU) assembly, ⑲ Guide rail (SUP) assembly	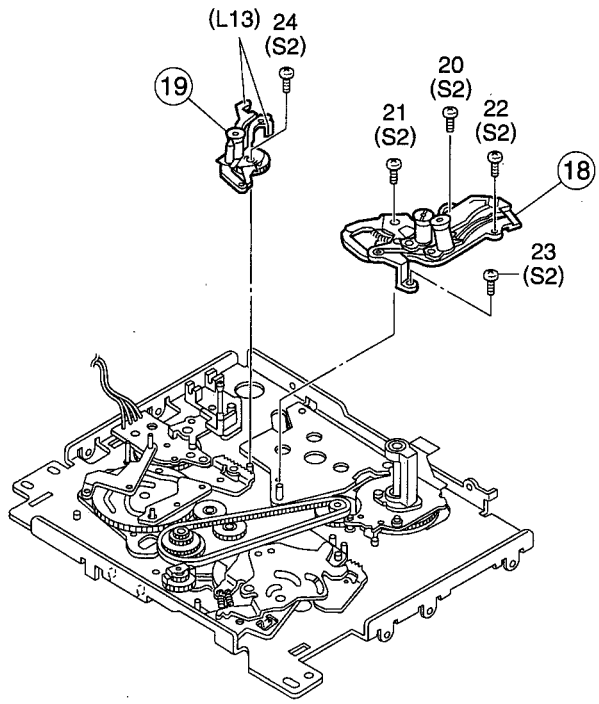 Fig. 2-7-12(a)	**<Removal>** **Guide rail (TU) assembly:** 1) Remove the 4 screws (S2) and remove the assembly. **Guide rail (SUP) assembly:** 1) Remove the screw (S2) and remove the assembly. **<Attaching>** 1) Return the guide pole fully to the unloading position, and attach the assemblies by reversing the removal procedures. When attaching, place the alignment markings of the two gears so that they face each other. (See Fig. 2-7-12(b).) 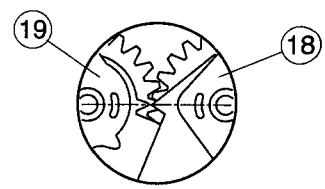 Fig. 2-7-12(b)

No.	Item	Reference picture/drawing	Procedure
13	⑳ Base plate assembly	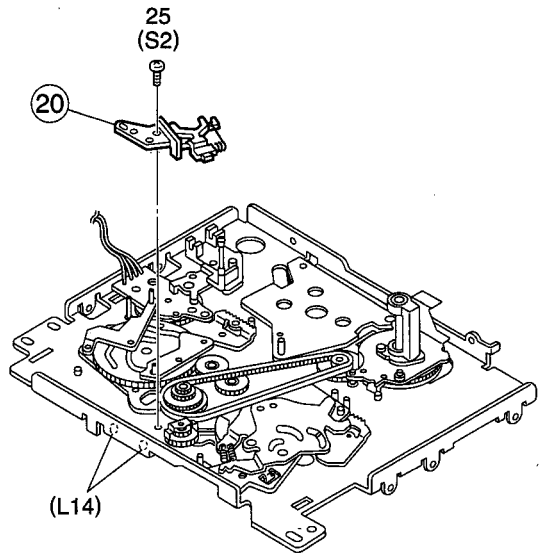 Fig. 2-7-13	**<Removal>** 1) Remove the screw (S2) and take out the assembly. **<Attaching>** 1) Attach the assembly to the boss (L14) as if inserting, then clamp with the screw.
14	㉑ Entrance guide base assembly, ㉒ Worm wheel 2, ㉓ Timing belt, ㉔ Center gear assembly	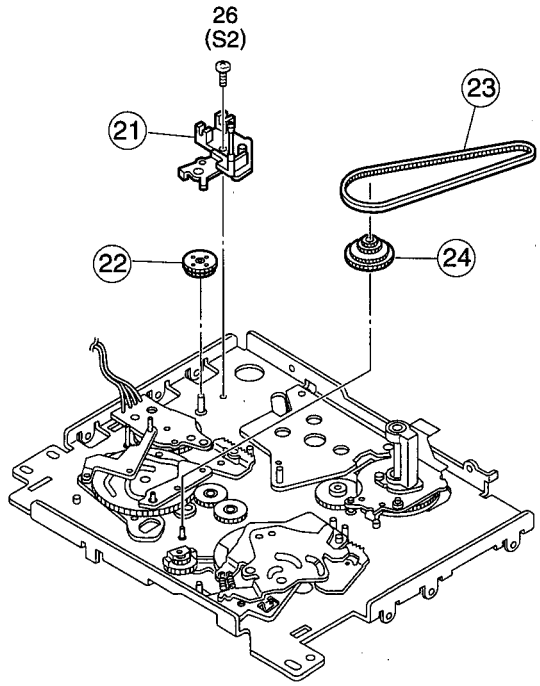 Fig. 2-7-14(a)	**<Removal>** 1) The entrance guide base assembly can be removed by removing the screw (S2). Other parts can be removed by simply pulling them out. **<Attaching>** 1) Reverse the removal procedure. See Fig.. 2-7-14(b) for the worm wheel 2. 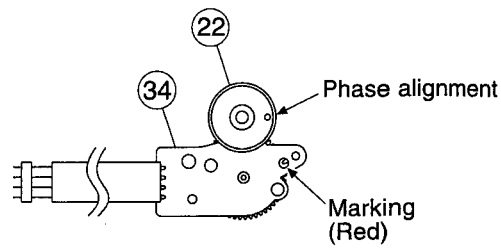 Align the phase of the rotary encoder assembly ㉞, then attach the main deck assembly by aligning the phase hole with the rotary encoder assembly. **Fig. 2-7-14(b) Attaching Worm Wheel 2 ㉒**

No.	Item	Reference picture/drawing	Procedure
15	㉕ Reel drive pulley assembly, ㉖ Push plate, ㉗ Clutch lock gear (1), ㉘ Clutch lock gear (2)	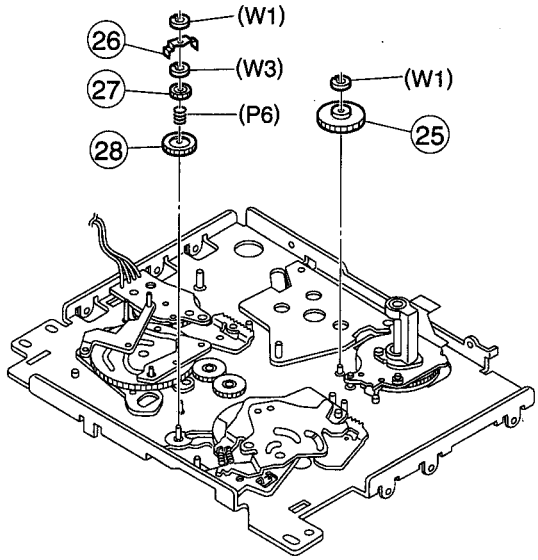 **Fig. 2-7-15**	**<Removal>** 1) Remove the washer (W1) and take out the assembly. **<Attaching>** 1) Reverse the removal procedure.

No.	Item	Reference picture/drawing	Procedure

16 ㉙ Tension control arm assembly, ㉚ Brake control arm assembly, ㉛ Charge arm assembly

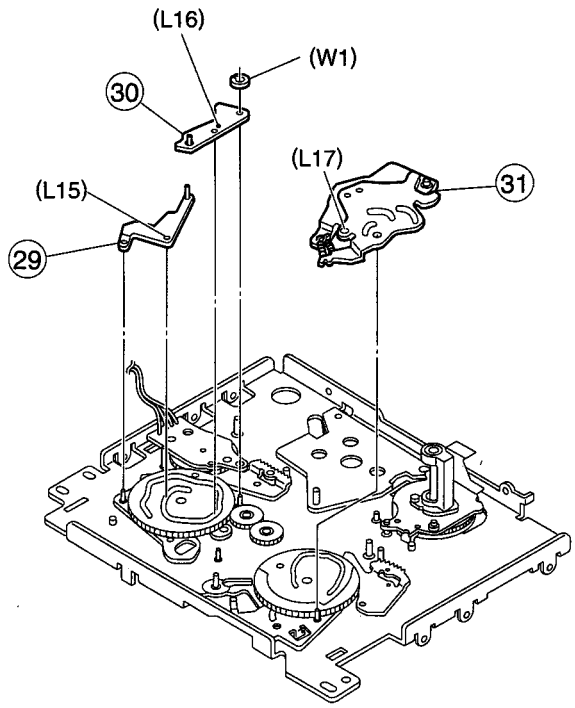

Fig. 2-7-16(a)

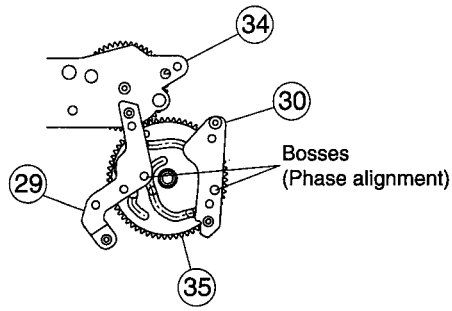

Align the phase of the main cam ㉟ then attach by fitting the bosses in the cam groove.

Fig. 2-7-16(b)

Attaching Tension Control Arm Assembly ㉙ and Brake Control Arm Assembly ㉚

<Removal>

1) The brake control assembly can be removed after removing the washer (W1).

<Attaching>

1) Align the phases of the main cam and sub cam , then attach by reversing the removal procedure. Refer to Fig. 2-7-16(b) and Fig. 2-7-16(c).

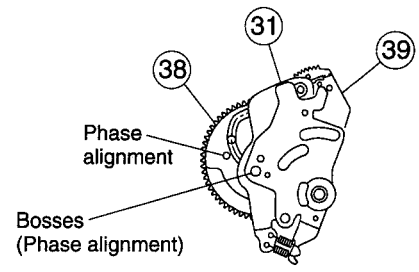

Phase alignment
Boss (Phase alignment)
Align the phase of the sub cam ㊳, then attach by fitting the boss into the cam groove.

Fig. 2-7-16(c) Attaching the Charge Arm Assembly ㉛

No.	Item	Reference picture/drawing	Procedure
17	㉜ Connect gear 2 (SUP), ㉝ Connect gear 2 (TU)	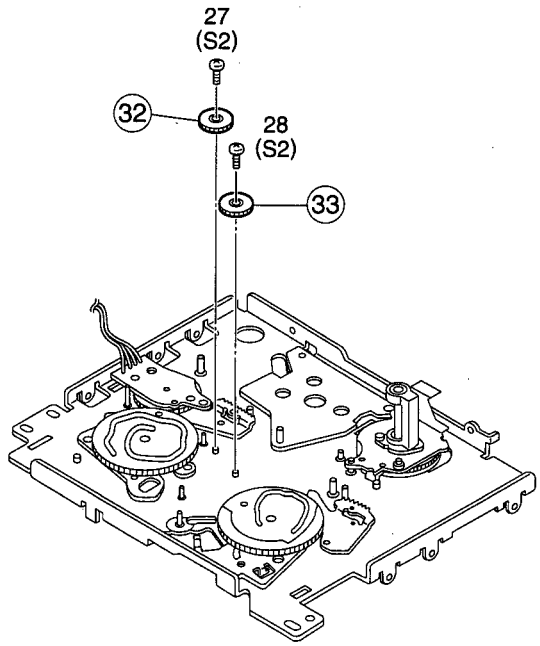 Fig. 2-7-17	**<Removal>** 1) Remove the screw (S2) and take out the gears. **<Attaching>** 1) Reverse the removal procedure. The two connect gears 2 are given the same part number. **NOTE** · **Align the phases of the main cam and sub cam when attaching.**

No.	Item	Reference picture/drawing	Procedure

18 ㉞ Rotary encoder assembly, ㉟ Main cam , ㊱ Arm gear 1 assembly, ㊲ Centering arm assembly

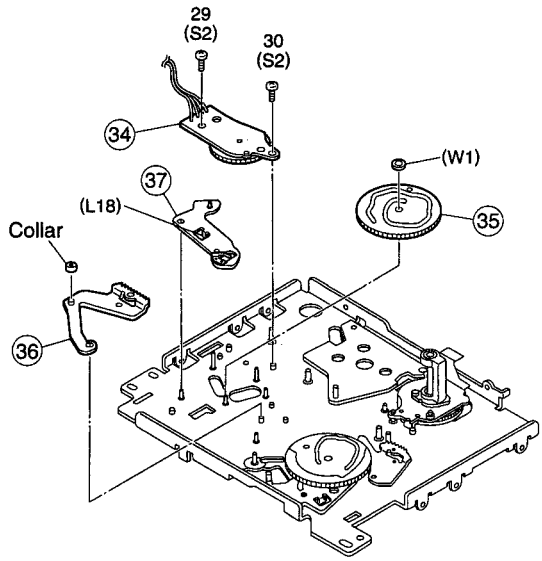

Fig. 2-7-18(a)

<Removal>

1) The rotary encoder can be removed by removing the 2 screws (S2).
2) The main cam can be removed by removing the washer (W1). As the cam gear is engaged at the rear of the main deck assembly while the phase is aligned, deviate the phase in the direction of the arrow before removal. (See Fig. 2-7-18(b).)

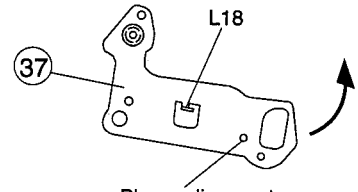

Fig. 2-7-18(b) Removing the Centering Arm Assembly ㊲

<Attaching>

1) Align the phase by referring to Figs. 2-7-18(c) and 2-7-18(d), then attach the ass'ies reverse the removal procedure.

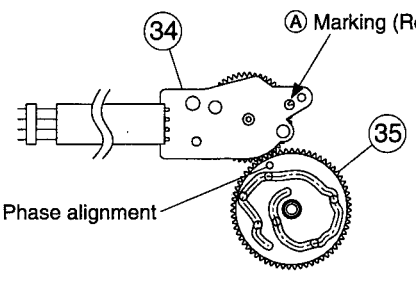

Align the phase of the main cam ㉟, then attach by aligning the red-colored markings Ⓐ (on 2 gear teeth) inside ○.

Fig. 2-7-18(c) Attaching the Rotary Encoder Assembly ㉞

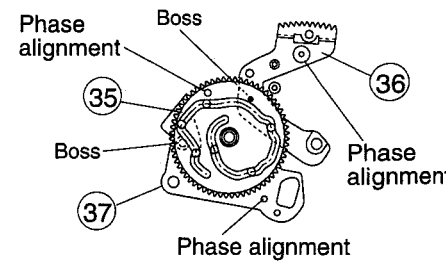

Align the phases of the arm gear 1 assembly ㊱ and centering arm assembly ㊲, then align those of the arm gear 1 assembly ㊱ and centering arm assembly ㊲, attach the gear by fitting the bosses into the cam groove below, and fit the slit washers.

Fig. 2-7-18(d) Attaching the Main Cam ㉟

No.	Item	Reference picture/drawing	Procedure

19 ㊳ Sub cam ㊴ Arm gear 2 assembly, ㊵ Clutch lock lever assembly

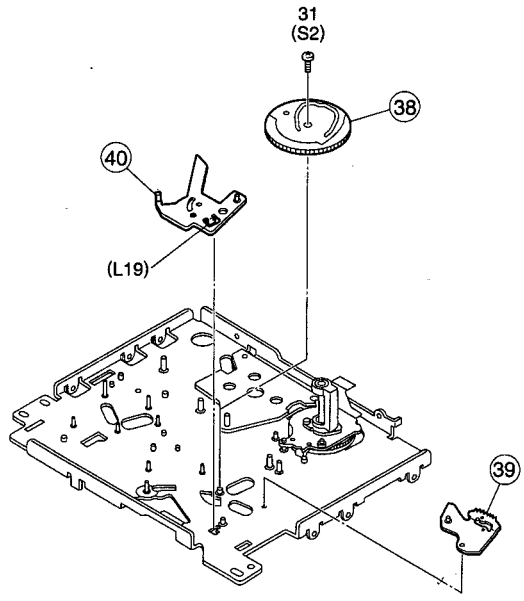

Fig. 2-7-19(a)

<Removal>

1) Remove the screw (S2) and take out the sub cam . As L19 is engaged at the rear of the main deck assembly while the phase is aligned, deviate the phase in the direction of the arrow before removal. 20. This checking should be done after completing the switching point adjustment.

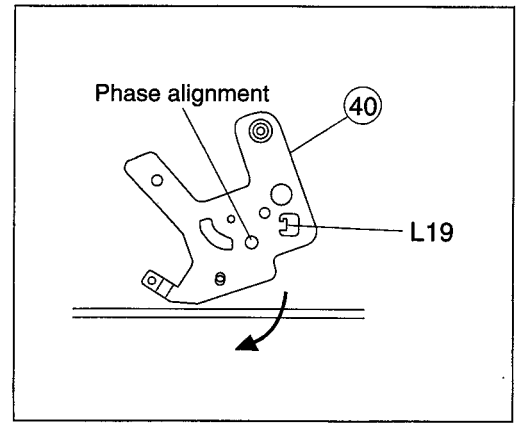

Fig. 2-7-19(b) Removing the Clutch Lock Lever Assembly ㊵

<Attaching>

1) Align the phase correctly by referring to Fig. 2-7-19(c), then attach by reversing the removal procedure.

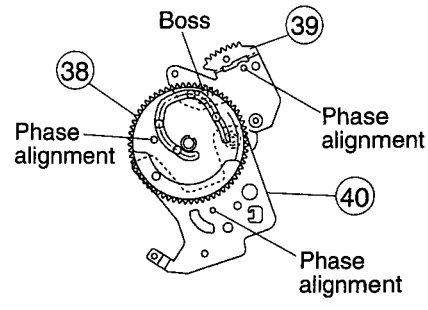

Align the phases of the arm gear 2 assembly ㊴ and clutch lock lever assembly ㊵, attach them by fitting the boss into the cam groove below, and clamp with the screw.

Fig. 2-7-19(c) Attaching the Sub Cam ㊳

No.	Item	Reference picture/drawing	Procedure
20	㊸ Cleaner assembly	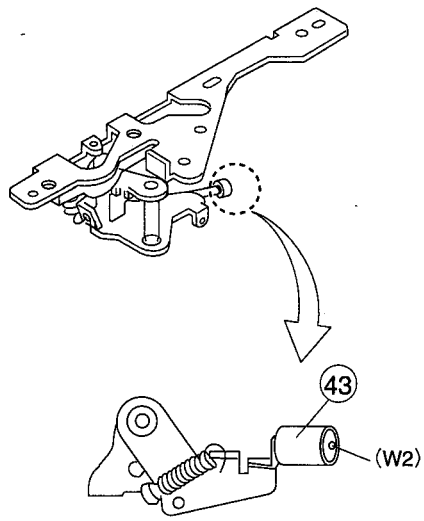 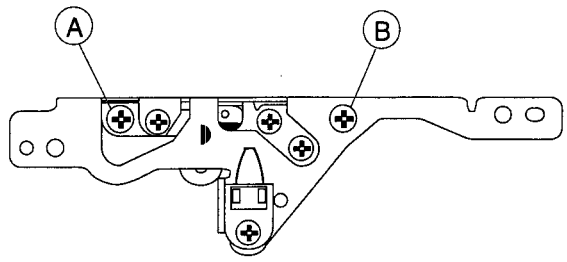 **Fig. 2-7-18(c)**	**<Removal>** 1) Remove the washer (W2) 2) Take out the ㊸ cleaner assembly. **<Attaching>** 1) Reverse the removal procedure. 2) Activate the cleaner (loading) and ensure that the cleaner contacts the drum normally. (Make sure that the cleaner rotation sound is heard.) **<When an active head cleaner assembly is disassembled>** **After the active head cleaner assembly has been disassembled and assembled, the following adjustment is required to restore the pressure of contact of the cleaner to the drum.** 1) Rotate screw Ⓐ fully clockwise until it is stopped, then rotate it counterclockwise by 2.5 turns. (The clamping torque is 4.9 x 10^{-4} N m/0.5 kgf cm or less) 2) Rotate screw Ⓑ fully clockwise until it is stopped, then rotate it counterclockwise by 0.5 of a turn. (The clamping torque is 4.9 x 10^{-4} N m/0.5 kgf cm or less) 3) Activate the cleaner (perform loading) and confirm that the contact between the claw, cleaner and drum is normal. (The rotation sound of the cleaner should be audible now.) 4) If the cleaner does not work normally, rotate screw Ⓑ clockwise by 1/8 turn and check the operation again.

2.8 CONFIRMATION AND ADJUSTMENT OF MECHANISM PHASES

See Fig. 2-8-1.

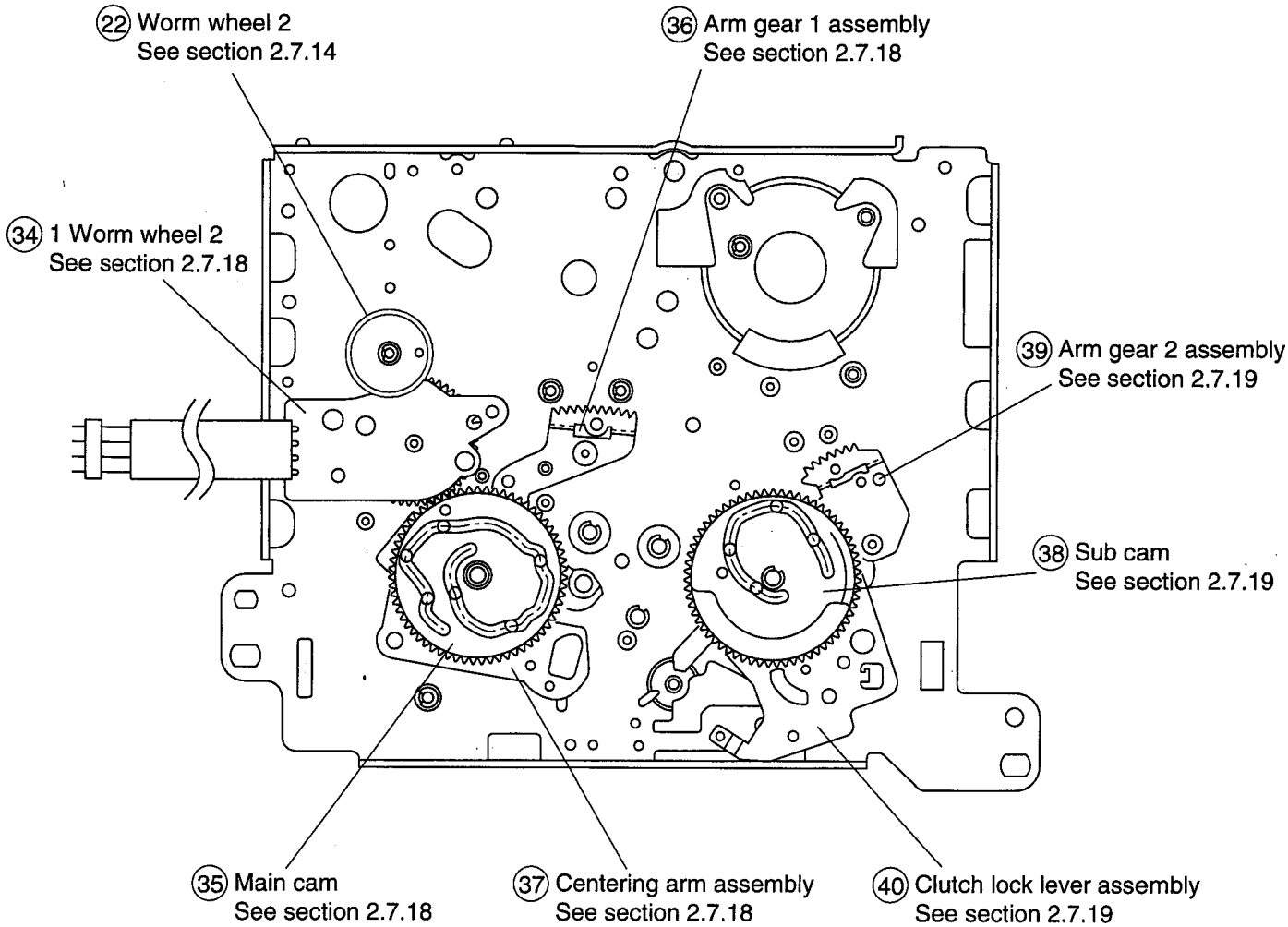

Fig. 2-8-1

2.9 MECHANISM DISASSEMBLY/ASSEMBLY SHEET

Screw Management																		
Drawing No.	Ⓐ		①			②				③			④	⑦	⑪			
No.	1	2	3	4	5	6	7	8	9	10	11	12	13	14	15	16	17	18
Table	S1	S1	S2	S2	S2	S2	S2	S2	S2	S2	S2	S2	S2	S3	S2	S2	S2	S2
Application																		
Ref. No.	No.1		No.2							No.5				No.8	No.9			

Ⓐ Cassette housing assembly

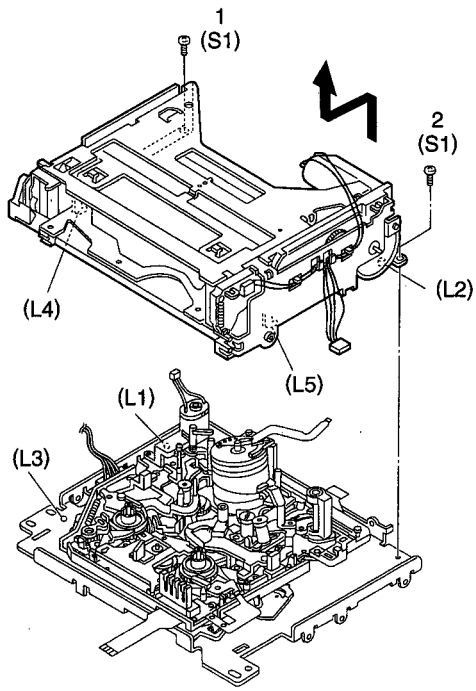

S×12,L1-L5

① Drum assembly

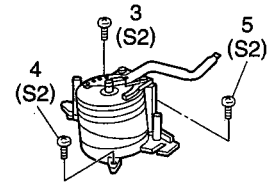

S2×3

④ Reel cover assembly

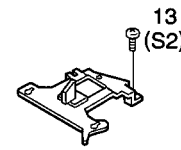

S2,L6×2

② Motor bracket assembly

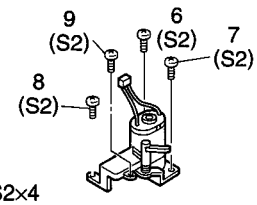

S2×4

⑤ Pinch roller arm assembly

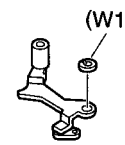

W1,7

③ Middle catcher assembly

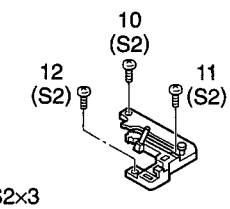

S2×3

⑥ Sub-brake assembly

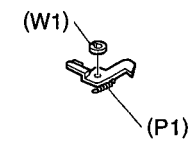

P1,W1,L8

⑰ Control plate

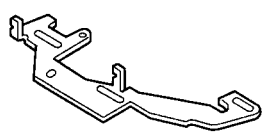

L12×2

⑱ Guide rail (TU) assembly

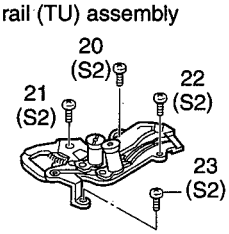

S2×4

⑲ Guide rail (SUP) assembly

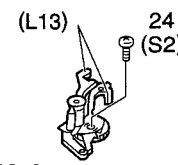

S2,L13×2

㉔ Center gear assembly

㉕ Reel drive pulley assembly

W1

㉖ Push plate

W1

㉗ Clutch lock gear (2)

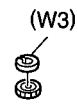

㉘ Clutch lock gear (1)

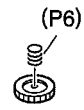

P6

㉙ Tension control arm assembly

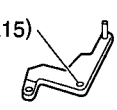

㉚ Brake control arm assembly

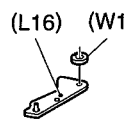

W1,L16

㉟ Main cam

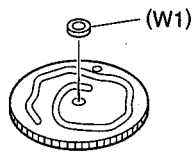

W1

㊱ Arm gear 1 assembly

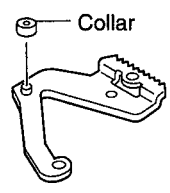

Collar

㊲ Centering arm assembly

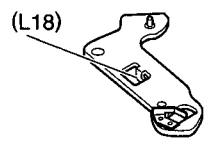

L18

㊳ Sub cam

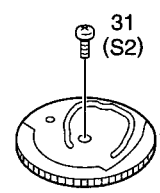

S2

Screw Management															
⑯	⑱				⑲	⑳	㉑	㉜	㉝	㉞		㊳	㊷		
19	20	21	22	23	24	25	26	27	28	29	30	31	32	33	34
S2	S2	S2	S2	S2	S2	S2	S2	S2	S2	S2	S2	S2	S2	S2	S2
No.11	No.12				No.13	No.14	No.17			No.18		No.19	–		

The slit washers cannot be reused once they have been removed.

⑦ Band arm plate assembly

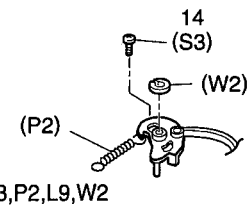

S3,P2,L9,W2

⑧ Tension arm assembly

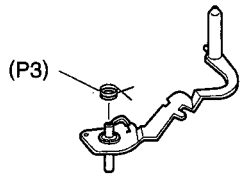

P3

⑪ Sub-deck assembly

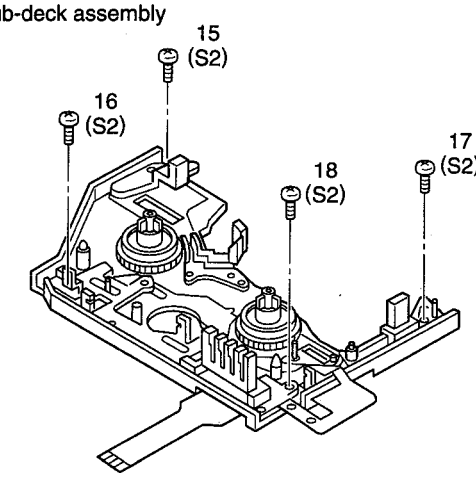

S2×4

⑫ Main brake (SUP) assembly

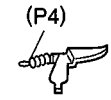

P4,L10

⑬ Main brake (TU) assembly

P5,L11

⑭ Reel base assembly (SUP)

⑮ Reel base assembly (TU)

⑨ Exit guide arm assembly

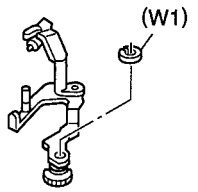

W1

⑩ Swing arm assembly

⑯ Prism

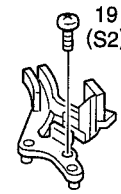

S2

⑳ Base plate (TU) assembly

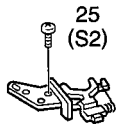

S2,L14×2

㉑ Entrance guide base assembly

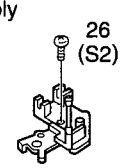

S2

㉒ Worm wheel 2

㉓ Timing belt

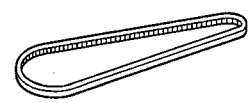

㉛ Charge arm assembly

L17

㉜ Connect gear 2

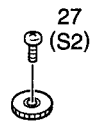

S2

㉝ Connect gear 2

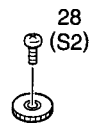

S2

㉞ Rotary encoder assembly

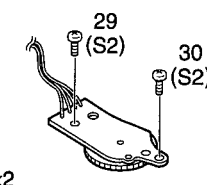

S2×2

㊴ Arm gear 2 assembly

㊵ Clutch lock lever assembly

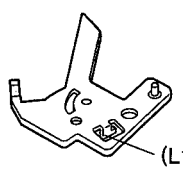

L19

㊶ Capstan motor

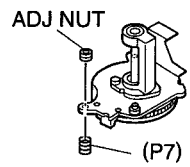

ADJ NUT,P7

㊷ Drum base deck

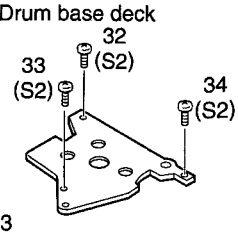

S2×3

2.10 DISASSEMBLY PROCEDURE LIST

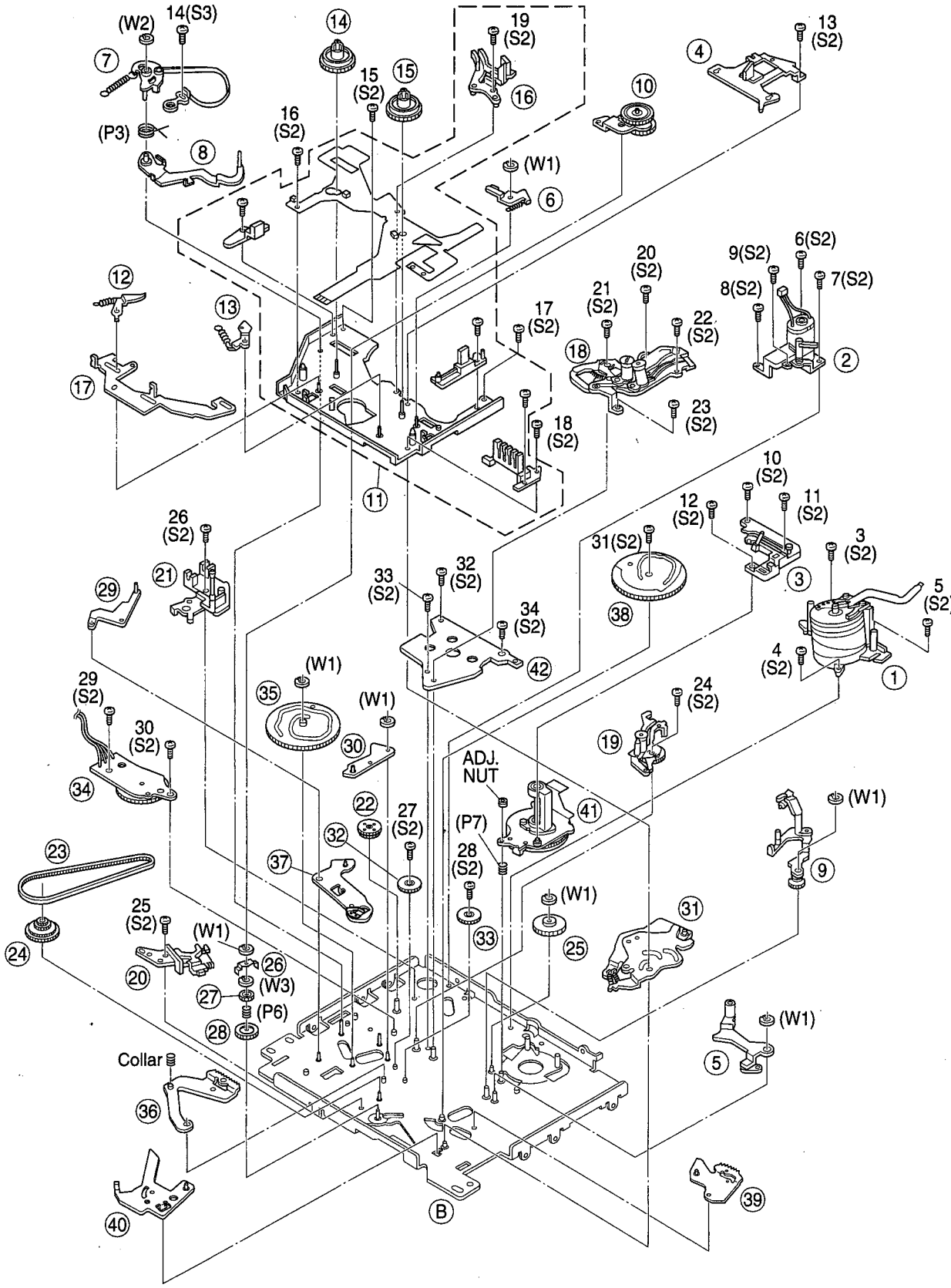

Fig. 2-9-1

Note) For the grease and oil application points, see section 5.6, "MECHANISM ASSEMBLY PARTS LIST M6"

2.11 TORQUE ADJUSTMENTS

No.	Item	Measuring instruments & Input signals	Mode	Measuring point (◎) Adjustment parts (⓵) Adjustment level (☆)	Adjustment procedure
1	SUP backup torque adjustment	• Cassette torque meter	Play	◎ Supply side indication of cassette torque meter ☆ $3.9^{+1.47}_{-0.39} \times 10^{-4}$N m (4.0 $^{+1.5}_{-0.4}$ gf cm)	(1) nsert the cassette torque meter and enter play mode. (2) The supply backup torque should be as specified. (If it fluctuates, read the center value.) (3) If it is out of specification, eject the tape, remove the cassette housing, loosen the screw (black) slightly and fine-adjust the band holder. Slightly turn the band holder as follows. · To increase torque: Counterclockwise · To decrease torque: Clockwise. **NOTE** **The screw securing torque should be 0.0588 N-m (0.6 kgf·cm).** 4) Check the supply backup torque again and repeat the above steps until it becomes as specified.
2	TU torque check	• Cassette torque meter	Play	◎ Take-up side indication of cassette torque meter ☆ $4.9^{+3.92}_{-1.96} \times 10^{-4}$N m (5.0 $^{+4.0}_{-2.0}$ gf cm)	(1) Insert the cassette torque meter and enter play mode. (2) Ensure that the take-up torque is as specified. If it is out of specification, check the assembly of the reel drive parts and the center gear assembly.

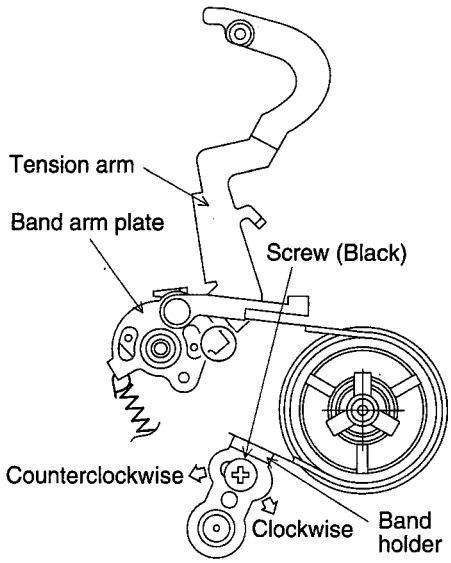

2.12 COMPATIBILITY ADJUSTMENT

2.12.1 Compatibility Adjustment Flow Chart

Fig. 2-12-1 shows the flow chart of compatibility adjustment.

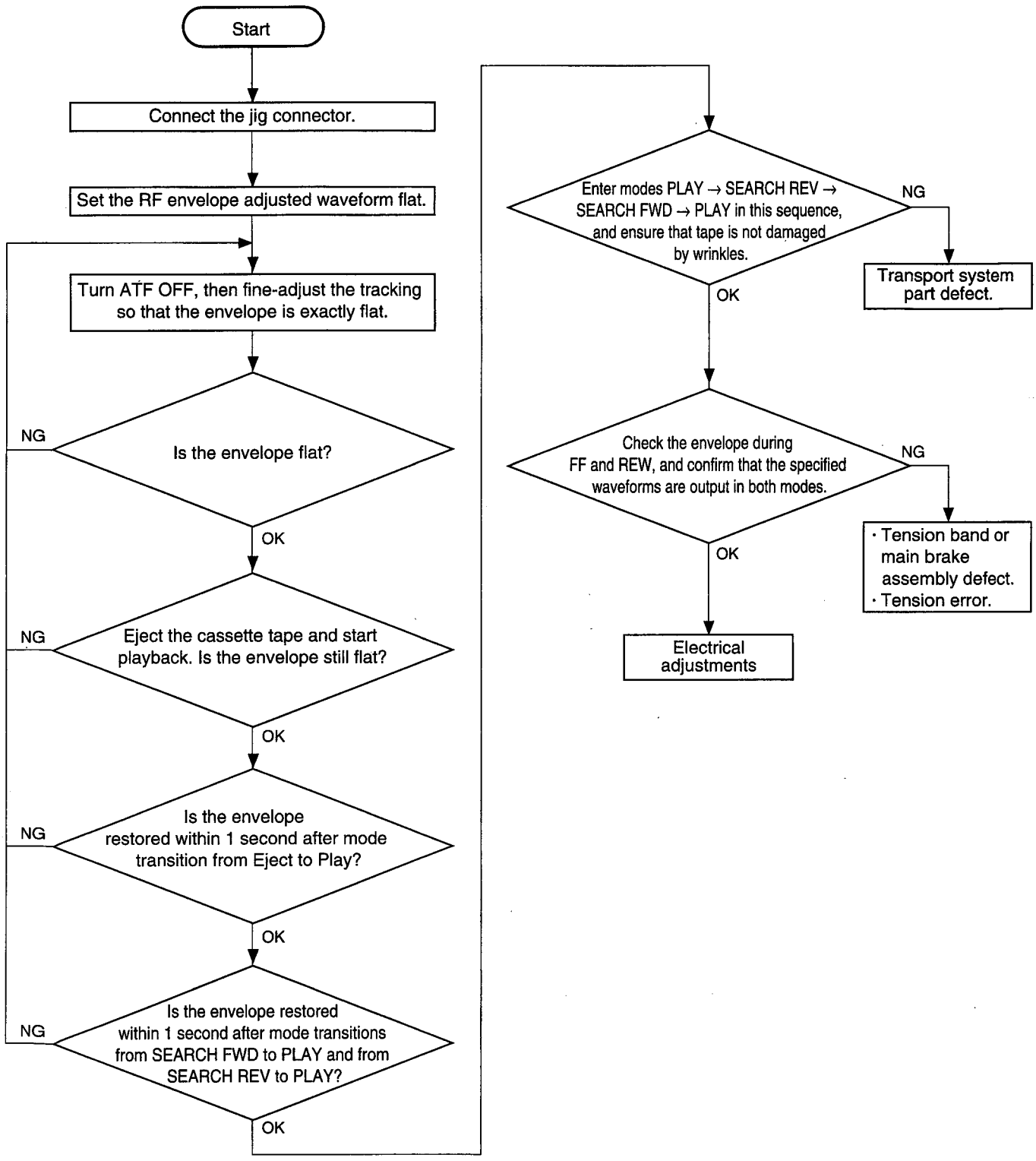

Fig. 2-12-1

2.12.2 Before Adjustments

Table 2-12-1 shows the adjustments to be enforced after servicing.

Servicing \ Adjustment Item	2.12.5 Linearity Adjustment	3.6.7 Play Switching Point Adjustment	3.6.8-3 Error Rate (PB EQ) Adjustment	3.6.8-1 REC Current Adjustment
Drum replacement	Note 1 Required	Required	Required	Required
Required	Note 1 Required	Not required	Check	Not required
IC901 replacement (PRE/REC amp on P/R & MDA board)	Not required	Not required	Check	Required
IC501 replacement (PB EQ on DV Main board)	Not required	Not required	Required	Not required
DV Main board replacement Note 2	Not required	Required	Required	Required

Table 2-12-1

Note 1 : Check is required after servicing or replacement related to the drum, TU/SUP guide rails or tension.

Note 2 : After having replaced the DV Main board, be sure to write the original data in the EEPROM (IC103) of the new board. If the original data cannot be written due to communication failure, mount the original EEPROM to the new board.
The following data are written in the EEPROM (IC103) on the DV MAIN board.

- EVR adjustment value data
- Hour meter
- Warning history
- IEEE1394 ID code

2.12.3 Adjustment Setup

As shown in Fig.2-12-2 below, connect the connector cable to CN104 on the DV MAIN board and then connect it to the PC cable.

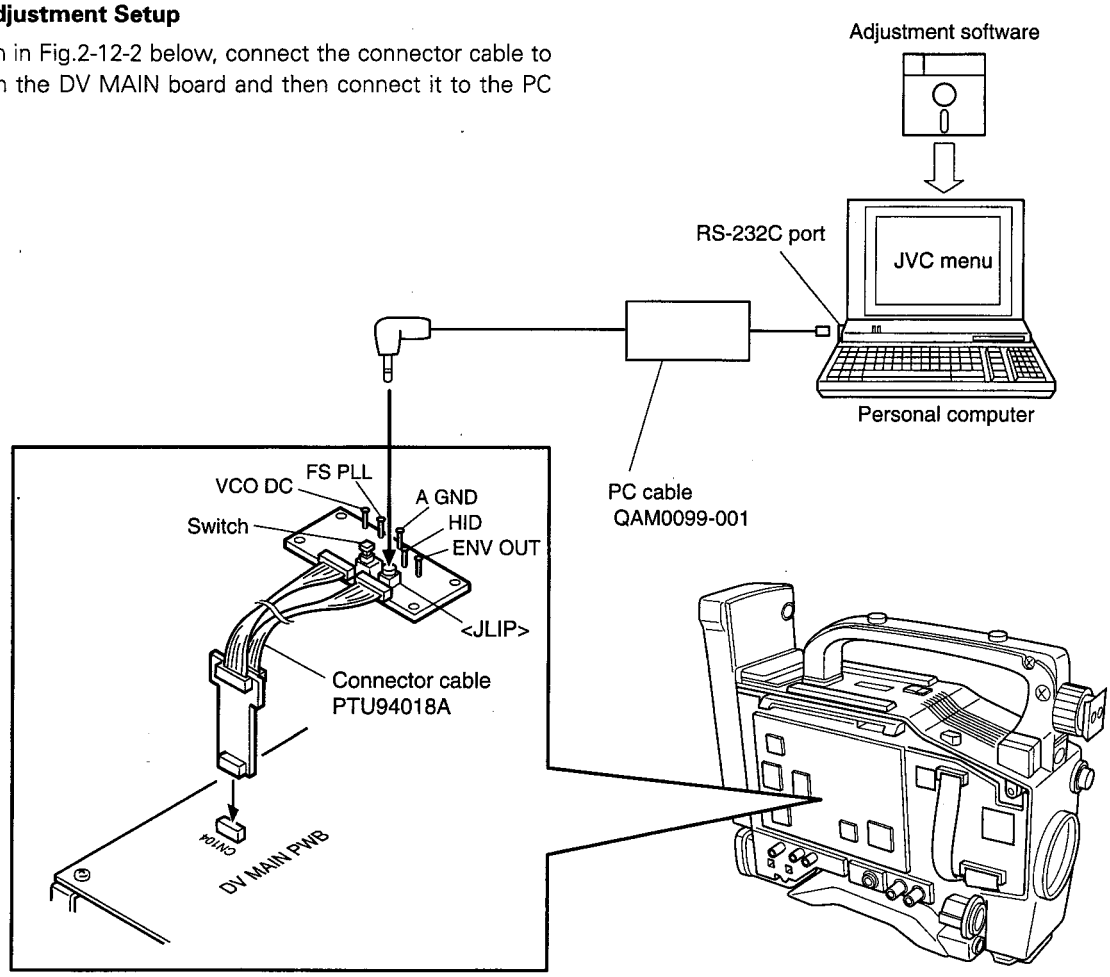

Fig. 2-12-2 Adjustment Setup

2.12.4 Tape Transport Restriction

The unit uses only the SUP guide roller and TU guide roller to restrict the tape transport. The tape is free (no restriction) from other parts.

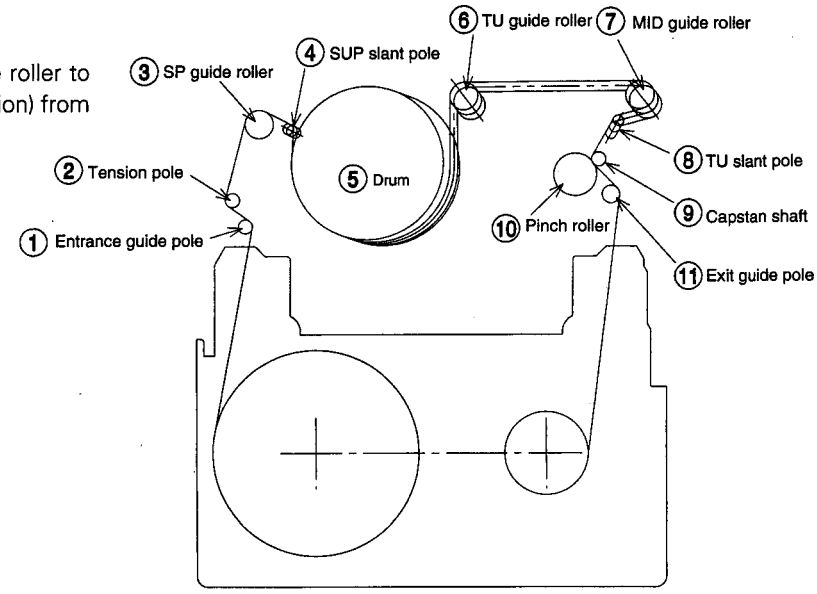

Fig. 2-12-3

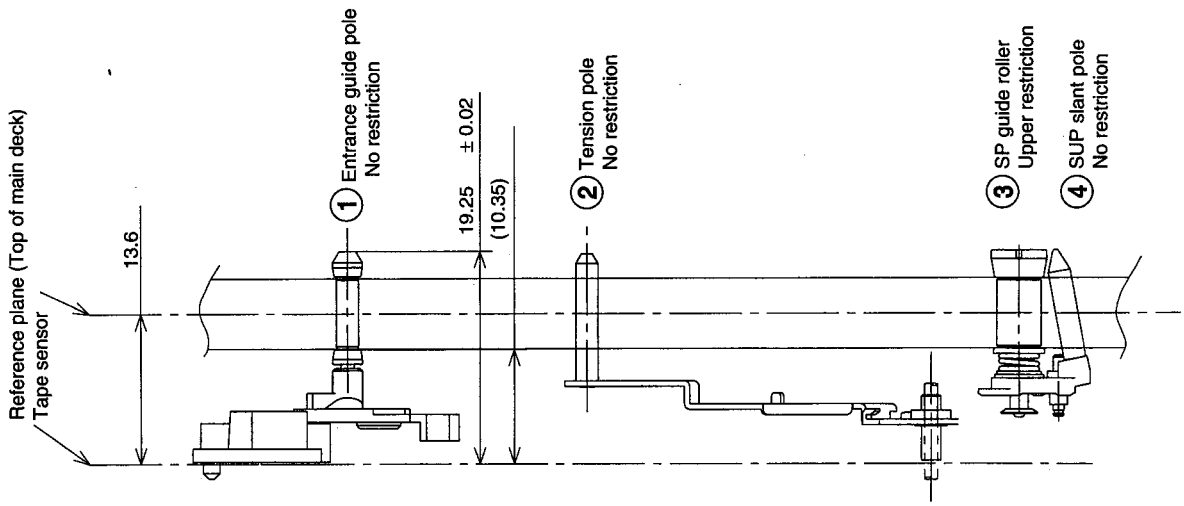

Fig. 2-12-4 Tape Restriction on Supply Side

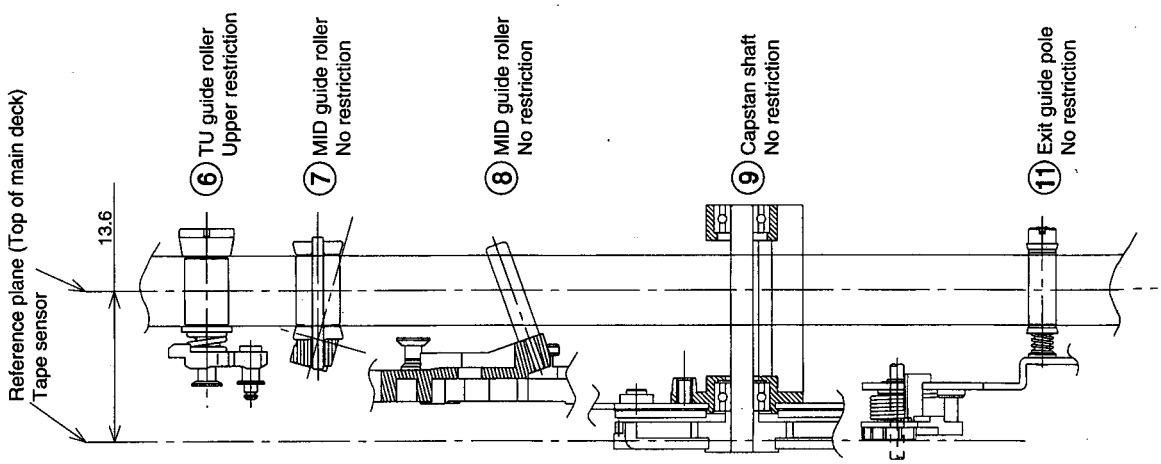

Fig. 2-12-5 Tape Restriction on Take-up Side

No.	Item	Measuring instruments & Input signals	Mode	Measuring point (◎) Adjustment parts (ⓣ) Adjustment level (☆)	Adjustment procedure

2.12.5 Compatibility Adjustment

1	Preparation				(1) Set up the adjustment software (see section 2.12.3, "Setup") and execute the program. (2) If it is required to switch the auto tracking function, set [ATF] to "OFF". When the ATF Value appears, vary the tracking value as desired.
2	RF envelope adjustment	• Error on supply side Oscilloscope, alignment tape MC-1(NTSC) MC-2(PAL) Color bar portion	Play	◎ ENV OUT [jig connector] ◎ HID [jig connector] ⓣ Supply guide roller ⓣ Take-up guide roller ☆ Make the waveforms flat. The drop level should be less than 3 dB with both SUP and TU levels. ☆ Flatness variation should be less than 2 dB.	(1) Play alignment tape color bar portion. (2) Observe the measuring points and adjust the supply guide roller and take-up guide roller so that the RF waveform is flat. (3) Set [ATF] to OFF and vary tracking. (4) Fine-adjust the supply and take-up guide rollers to make the waveform exactly flat. (5) Set the mode to EJECT, then set to the PLAY mode and ensure that the RF waveform is flat.

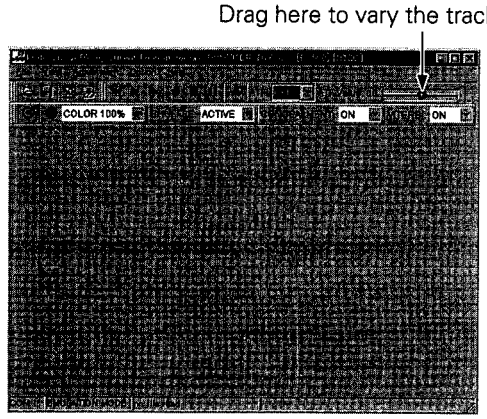

Fig. 2-12-6 PC Display of Adjustment Software

NOTE
- **Be sure to clean the tape transport parts and play a cleaning tape before proceeding to the compatibility adjustment.**

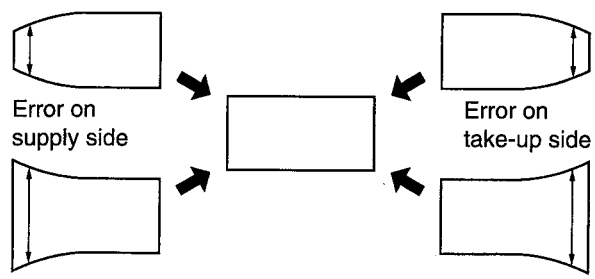

Fig. 2-12-7

No.	Item	Measuring instruments & Input signals	Mode	Measuring point (◎) Adjustment parts (ⓣ) Adjustment level (☆)	Adjustment procedure
3	Waveform rise check	• Oscilloscope, alignment tape MC-1(NTSC) MC-2(PAL) Color bar portion	Eject →Play Search FWD →Play Search REV → Play	◎ ENV OUT [jig connector] ◎ HID [jig connector] ☆The envelope waveform should be restored within 1 sec.	(1) Switch the mode from Eject → Play and ensure that the envelope waveform is restored in less than 1 sec. (2) Switch the mode from Search FWD → Play and from Search REV → Play, and ensure that the envelope is restored in less than 1 sec. in both cases. (3) If the waveform does not restore in the specified period, fine-adjust the supply/take-up guide rollers as far as the envelope waveform specification is met, then restart checking from the above procedure 1 again.
4	Damage check	• Self-recorded/ played tape 60ME	Play ↓ Search REV ↓ Search FWD ↓ Play	◎ ENV OUT [jig connector] ◎ HID [jig connector] ☆The tape should not be damaged by wrinkle.	(1) Transport the self-recorded/played tape from the beginning by changing modes in order of Play → Search REV → Search FWD → Play, and ensure that wrinkles due to strong restriction by the guide rollers and guide pole are not produced on tape. (2) Perform the same check at the section near the end of tape.
5	Envelope check during FF/REW	• Oscilloscope, alignment tape MC-1(NTSC) MC-2(PAL) Color bar portion	FF REW	◎ ENV OUT [jig connector] ◎ HID [jig connector] ☆A > 55µsec. ☆B ≧ T/3	(1) Insert the alignment tape and enter Stop mode. (2) Enter FF mode. (3) Ensure that the envelope output is present at 55 (s before the HID switching timing. (4) Check the take-up side of the envelope to see that the MAX output duration is more than 1/3 the HID duration. **This checking should be done after completing the switching point adjustment.** (5) Enter REW mode and check the same items as (3) and (4) above. (6) If the envelope is out of specification, check the tension band and main brake assembly and replace as required. Confirm the playback switching point.

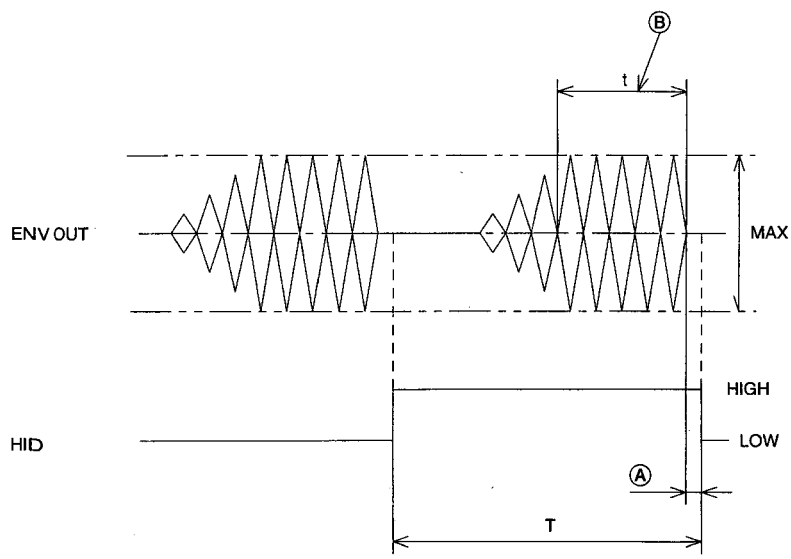

Fig. 2-12-8

SECTION 3
ELECTRICAL ADJUSTMENTS

3.1 FLOWCHART OF ELECTRICAL ADJUSTMENTS

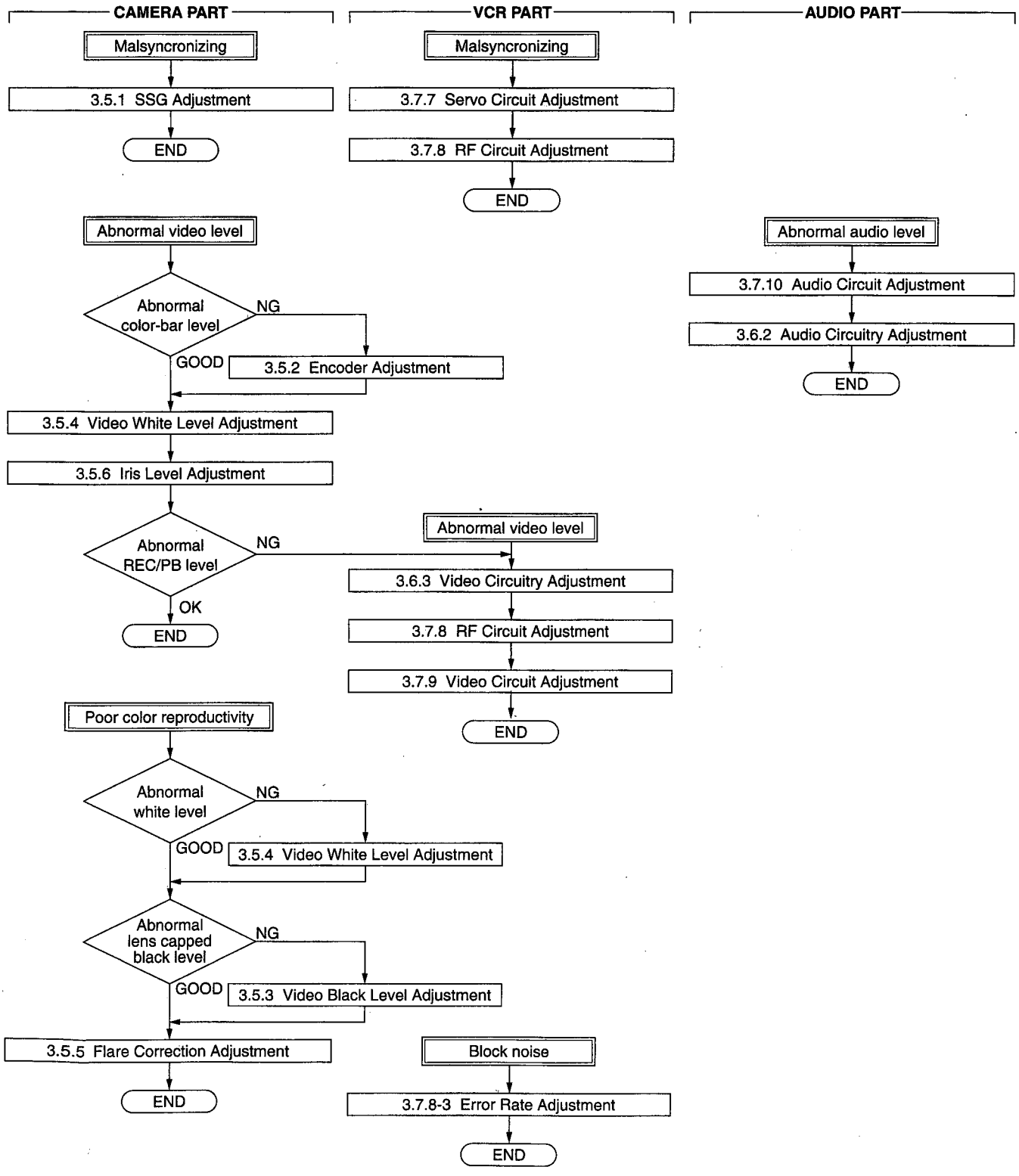

3.2 FUNCTIONS REQUIRED FOR ADJUSTMENTS, SETUP

3.2.1 General instruments necessary for adjustment

Instrument	Condition	Instrument	Condition
Oscilloscope	Calibrated instrument with a measuring bandwidth of 100 MHz or more.	Frequency counter	Instrument calibrated for 8 digits or more. Stability of 0.1 ppm or $1x10^{-7}$ or better is required at 0 to 40°C.
Vectorscope	Calibrated instrument		
Audio tester	Calibrated instrument	Monitor TV	Color video monitor with a 75Ω video input.

3.2.2 Special implements required for adjustment

1	Computor	2	Waveform monitor (WFM)	3	Gray scale chart
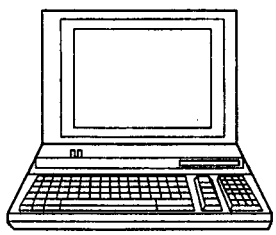 Windows 95 or NT		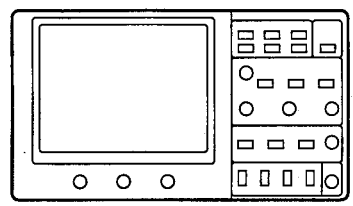		(Part No.:GS2L) 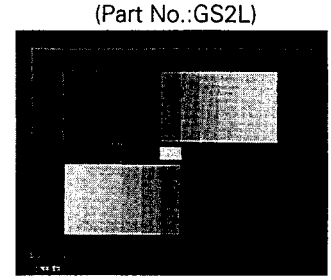	
4	Lens	5	Viewfinder	6	Tripod base
S14X7.3B12 or equiv. 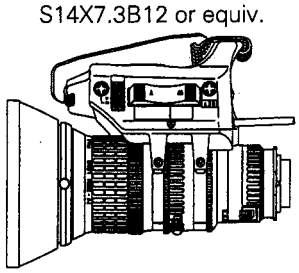		VF-P115B or equiv. 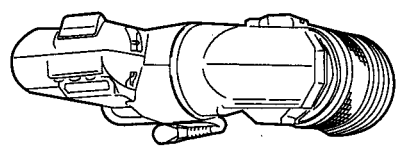		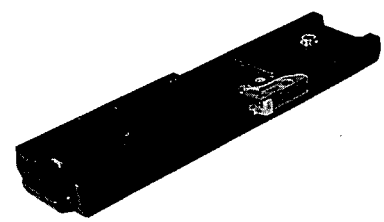	
7	Power supply unit	8	Monitor TV	9	Alignment tape
AA-P250 or equiv. 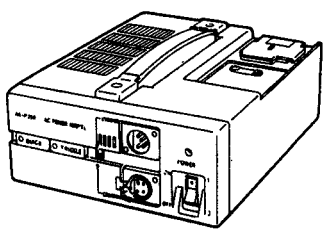		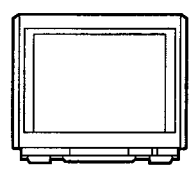		MC-1 : NTSC MC-2 : PAL 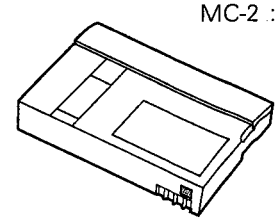	
10	Connector cable PTU94018A	11	Adjustment software PLSC1304	12	PC cable QAM0099-001
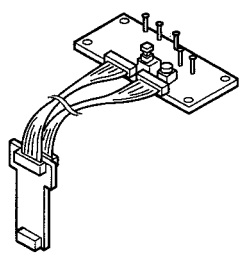		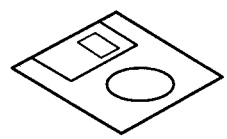		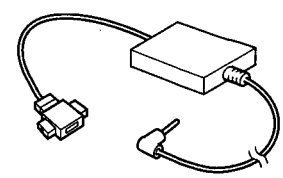	

Fig. 3-1-1 Special implements required for adjustment

3.3 STANDARD SETUP

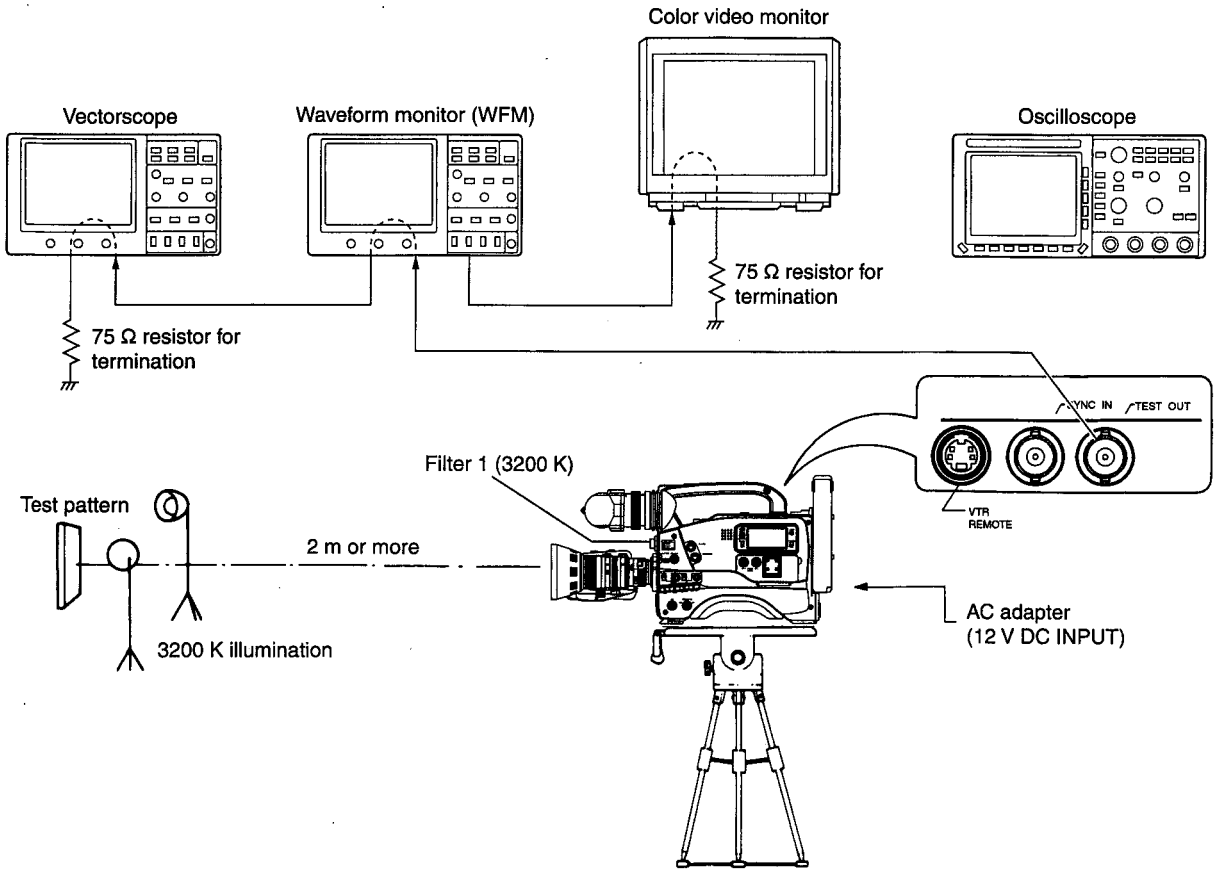

3.4 ADJUSTMENT MENU

3.4.1 Switches and Functions Used in Adjustments

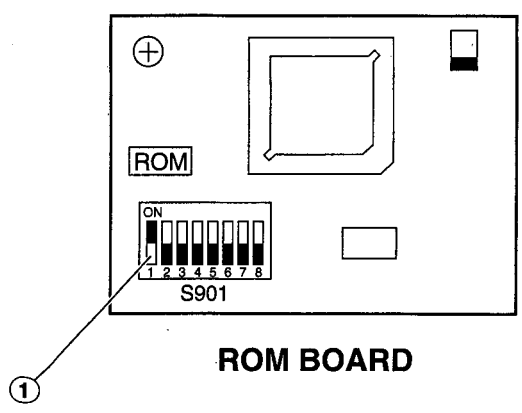

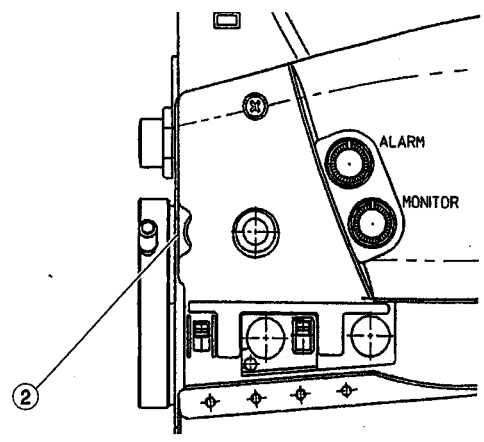

① SW901-1 on ROM board : Set to ON (up) to display the adjustment menu on the viewfinder screen and enter the adjustment mode.
Set to OFF (down) to turn off the adjustment menu on the viewfinder screen and exit from the adjustment mode.

② SHUTTER/MENU dial : Used to select an adjustment item, adjust the selected item and store the adjusted value in memory.

3.4.2 Operation Procedure

(1) Open the right side cover and set the DIP switch SW901-1 on the ROM board to ON (up).
(2) When the cursor on the left of an item is blinking and the adjustment value is lit steadily, rotating the SHUTTER/MENU dial selects the adjustment item. Rotate this dial continuously to turn over the page of the MENU screen.
(3) When the cursor on the left of an item is blinking and the adjustment value is lit steadily, pushing the SHUTTER/MENU dial causes the selected item to blink.
(4) When the cursor on the left of an item is blinking and the adjustment value is blinking, rotating the SHUTTER/MENU dial varies the adjustment value.
(5) When the cursor on the left of an item is blinking and the adjustment value is blinking, pushing the SHUTTER/MENU dial stores the adjustment value in memory and returns to the adjustment item selection step.
(6) Set the DIP switch SW901-1 on the ROM board to OFF (down) to exit from the adjustment mode.

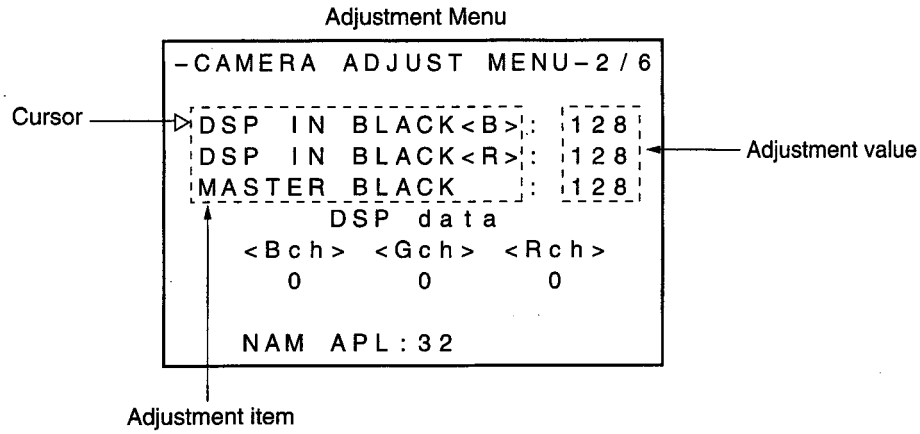

Cursor	Adjustment Value	SHUTTER/MENU Dial	
		Rotate	Push
Blinking	Steady lighting	Selects an adjustment item.	Adjustment value blinks.
Blinking	Blinking	Varies an adjustment value.	Stores adjustment value in memory.

Functions of SHUTTER/MENU Dial

3.4.3 Flowchart of ADJUST MENU

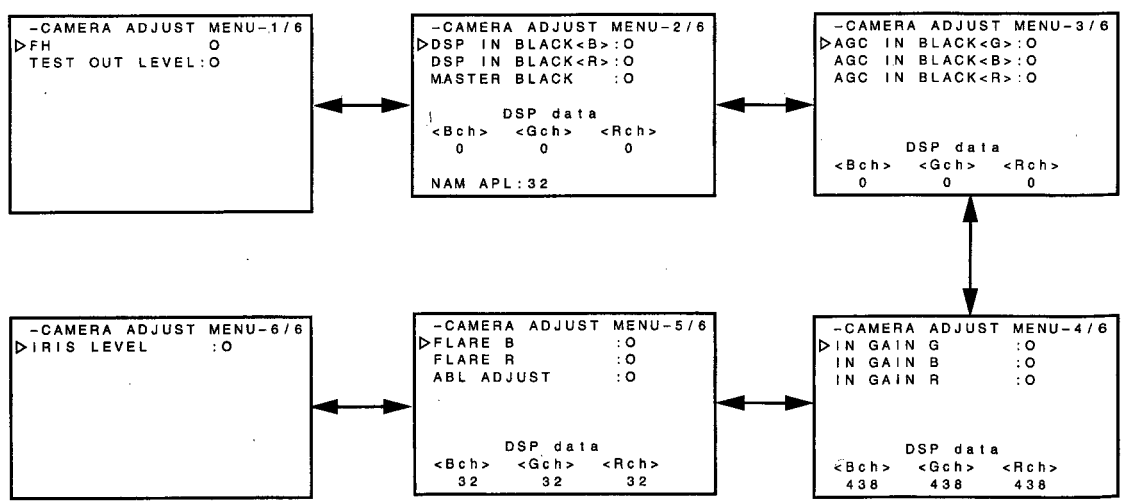

No.	Item	Measuring instruments & Input signals	Mode	Measuring point (◎) Adjustment parts (ⓣ) Adjustment level (☆)	Adjustment procedure

3.5 CAMERA ADJUSTMENTS

3.5.1 SSG Adjustment

No.	Item	Measuring instruments & Input signals	Mode	Measuring point (◎) Adjustment parts (ⓣ) Adjustment level (☆)	Adjustment procedure
1	fh frequency adjustment	• Frequency counter 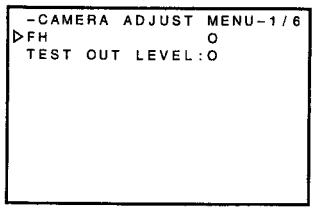	Adjustment menu 1/6 (Color bar output)	◎ TP101 (CAM2) ⓣ SHUTTER/MENU dial ☆ 27 MHz ±30 Hz 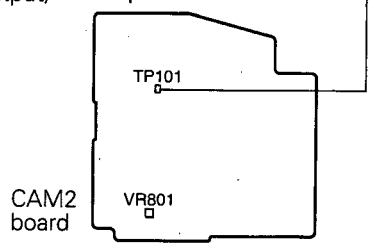	(1) Open the left side cover. (2) Rotate the SHUTTER/MENU dial to select MENU 1/6: FH. (3) Push the SHUTTER/MENU dial so that the adjustment value blinks then rotate it to adjust to the specified level. (4) Push the SHUTTER/MENU dial to store the adjustment data in memory.

3.5.2 Encoder Adjustments

No.	Item	Measuring instruments & Input signals	Mode	Measuring point (◎) Adjustment parts (ⓣ) Adjustment level (☆)	Adjustment procedure
1	TEST OUT LEVEL adjustment	• Oscilloscope (H-rate, 10:1) or WFM 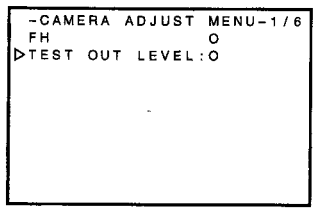	Adjustment menu 1/6 (Color bar output)	◎ TEST OUT (75 Ω terminated) ⓣ SHUTTER/MENU dial ☆ 1 Vp-p ± 0.003 Vp-p (140 IRE ±4 IRE) 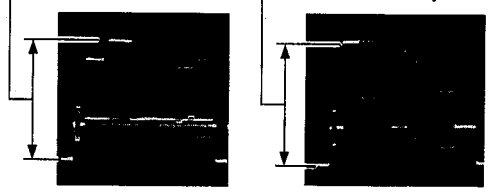 [NTSC] [PAL]	(1) Rotate the SHUTTER/MENU dial to select MENU 1/6: TEST OUT LEVEL. (2) Push the SHUTTER/MENU dial so that the adjustment value blinks then rotate it to adjust to the specified level. (3) Push the SHUTTER/MENU dial to store the adjustment data in memory.
2	CHROMA LEVEL adjustment	• Oscilloscope (H-rate, 10:1) or WFM • Vectorscope 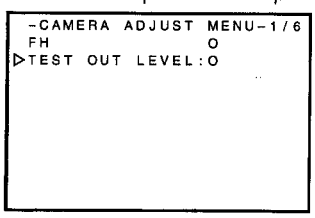 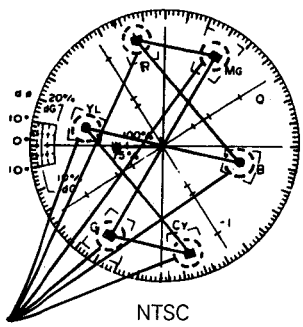 NTSC Adjust so that all the spots are located inside the ⊞ marks. 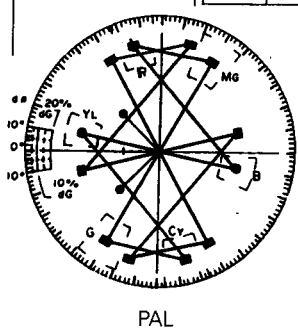 PAL	Adjustment menu 1/6 (Color bar output)	◎ TEST OUT (75 Ω terminated) ⓣ VR801 (CAM2) ☆ All the spots of the color bar signal should be within the ⊞ marks of the vectorscope and the burst level should be as specified. NTSC 0.286 ± 0.015 Vp-p PAL 0.3 ± 0.015 Vp-p	(1) Open the left side cover. (2) Adjust VR801 on the CAM2 board to the specified level. 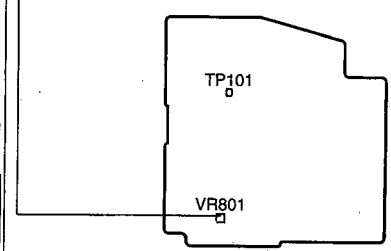 CAM2 board 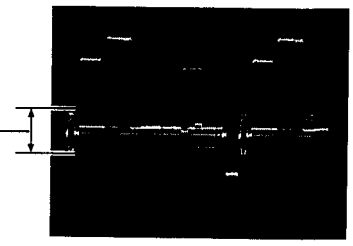

No.	Item	Measuring instruments & Input signals	Mode	Measuring point (◎) Adjustment parts (ⓘ) Adjustment level (☆)	Adjustment procedure

3.5.3 Video Black Level Adjustments

No.	Item	Measuring instruments & Input signals	Mode	Measuring point (◎) Adjustment parts (ⓘ) Adjustment level (☆)	Adjustment procedure
1	DSP IN BLACK adjustment	• Oscilloscope (H-rate, 10:1) or WFM • Vectorscope • Lens capped or iris closed.	Adjustment menu 2/6	◎ TEST OUT (75 Ω terminated) ⓘ SHUTTER/MENU dial ☆ Position the noise on the B-Y_L axis at the center of the vectorscope.	(1) Rotate the SHUTTER/MENU dial to select MENU 2/6: DSP IN BLACK <B>. (2) Push the SHUTTER/MENU dial so that the adjustment value blinks then rotate it to adjust to the specified level. (3) Push the SHUTTER/MENU dial to store the adjustment data in memory.

```
-CAMERA ADJUST MENU-2/6
▷DSP IN BLACK<B>:O
 DSP IN BLACK<R>:O
 MASTER BLACK   :O

        DSP data
<Bch>   <Gch>   <Rch>
  0       0       0

NAM APL:32
```

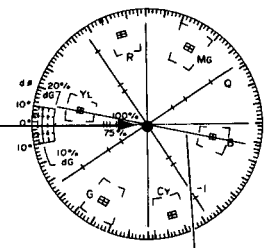

B-Y_L axis

	☆ Position the noise on the R-C_Y axis at the center of the vectorscope.

```
-CAMERA ADJUST MENU-2/6
 DSP IN BLACK<B>:O
▷DSP IN BLACK<R>:O
 MASTER BLACK   :O

        DSP data
<Bch>   <Gch>   <Rch>
  0       0       0

NAM APL:32
```

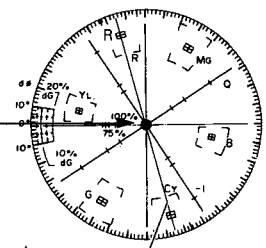

R-C_Y axis

	☆ Position NAM APL at the center of 32 MASTER BLACK variation range.

```
-CAMERA ADJUST MENU-2/6
 DSP IN BLACK<B>:O
 DSP IN BLACK<R>:O
▷MASTER BLACK   :[O]

        DSP data
<Bch>   <Gch>   <Rch>
  0       0       0

NAM APL:[32]
```

(4) Rotate the SHUTTER/MENU dial to select MENU 2/6: DSP IN BLACK <R>.
(5) Push the SHUTTER/MENU dial so that the adjustment value blinks, then rotate it to adjust to the specified level.
(6) Push the SHUTTER/MENU dial to store the adjustment data in memory.

(7) Rotate the SHUTTER/MENU dial to select MENU 2/6: MASTER BLACK.
(8) Push the SHUTTER/MENU dial so that the adjustment value blinks, then rotate it to adjust to the specified level.
(9) Push the SHUTTER/MENU dial to store the adjustment data in memory.

(10) Check the following condition.

NTSC	5.3 ± 7 Vp-p
PAL	0 ± 7 Vp-p

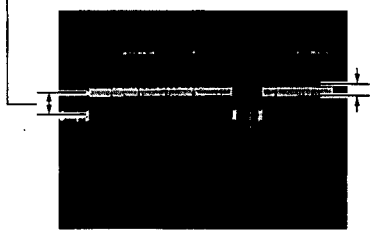

Carrier: less than 30 mVp-p

No.	Item	Measuring instruments & Input signals	Mode	Measuring point (◎) Adjustment parts (①) Adjustment level (☆)	Adjustment procedure
2	AGC IN BLACK adjustment	• Oscilloscope (V-rate, 10:1) or WFM • Lens capped or iris closed. • Vectorscope	Adjustment menu 3/6 GAIN SW H (+18 dB)	◎ TEST OUT (75 Ω terminated) ① SHUTTER/MENU dial ☆ Minimize V shading.	(1) Rotate the SHUTTER/MENU dial to select MENU 3/6: AGC IN BLACK <G>. (2) Push the SHUTTER/MENU dial so that the adjustment value blinks then rotate it to adjust to the specified level. (3) Push the SHUTTER/MENU dial to store the adjustment data in memory.
				☆ Minimize V shading.	(4) Rotate the SHUTTER/MENU dial to select MENU 3/6: AGC IN BLACK <B>. (5) Push the SHUTTER/MENU dial so that the adjustment value blinks then rotate it to adjust to the specified level. (6) Push the SHUTTER/MENU dial to store the adjustment data in memory.
				☆ Minimize V shading.	(7) Rotate the SHUTTER/MENU dial to select MENU 3/6: AGC IN BLACK <R>. (8) Push the SHUTTER/MENU dial so that the adjustment value blinks then rotate it to adjust to the specified level. (9) Push the SHUTTER/MENU dial to store the adjustment data in memory.
				Ensure that noise display is almost completely circular.	(10) Check that the noise display on the vectorscope is close to a true circle. If the circle is distorted, repeat (1) to (9) until it approaches a true circle. (11) Set the GAIN SW to L (0dB).

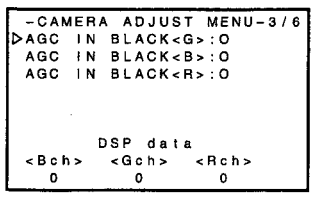

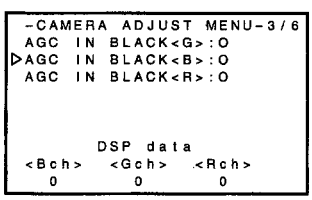

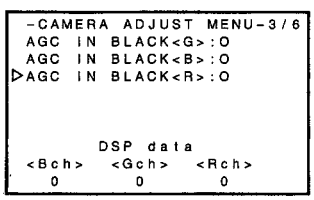

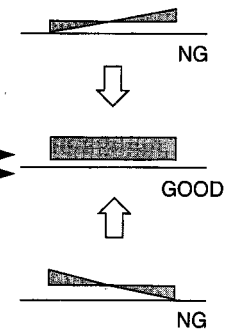

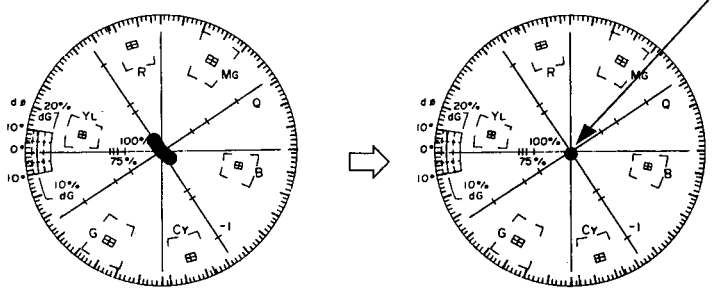

No.	Item	Measuring instruments & Input signals	Mode	Measuring point (◎) Adjustment parts (Ⓣ) Adjustment level (☆)	Adjustment procedure

3.5.4 Video White Level Adjustments

1	IN GAIN adjustment	• Oscilloscope (H-rate, 10:1) or WFM • Gray scale chart (precisely scanned size)	Adjustment menu 4/6	◎ TP2 (TG,Open the left side cover) Ⓣ Lens iris ☆ 1.00 ± 0.01 Vp-p	(1) Rotate the SHUTTER/MENU dial to select MENU 4/6: IN GAIN <G>. (2) Shoot the gray scale chart and adjust the lens iris so that the white peak level is as specified.
				◎ TEST OUT (75 Ω terminated) Ⓣ SHUTTER/MENU dial ☆ DSP DATA <G>: 515 ± 2	(3) Push the SHUTTER/MENU dial so that the adjustment value blinks then rotate it to adjust to the specified level. (4) Push the SHUTTER/MENU dial to store the adjustment data in memory.
				◎ TEST OUT (75 Ω terminated) Ⓣ SHUTTER/MENU dial ☆ DSP DATA <B>: ± 2 of DSP DATA <G>	(5) Rotate the SHUTTER/MENU dial to select MENU 4/6: IN GAIN <B>. (6) Push the SHUTTER/MENU dial so that the adjustment value blinks then rotate it to adjust to the specified level. (7) Push the SHUTTER/MENU dial to store the adjustment data in memory.
				◎ TEST OUT (75 Ω terminated) Ⓣ SHUTTER/MENU dial ☆ DSP DATA <R>: ± 2 of DSP DATA <G>	(8) Rotate the SHUTTER/MENU dial to select MENU 4/6: IN GAIN <R>. (9) Push the SHUTTER/MENU dial so that the adjustment value blinks then rotate it to adjust to the specified level. (10) Push the SHUTTER/MENU dial to store the adjustment data in memory.
				◎ TEST OUT (75 Ω terminated) Ⓣ SHUTTER/MENU dial ☆ Minimize the carrier leak.	(11) Minimize the white carrier leak signal of the video signal by repeating steps (5) to (10). (Carrier leak: less than 30 mVp-p)

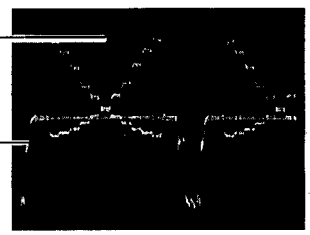

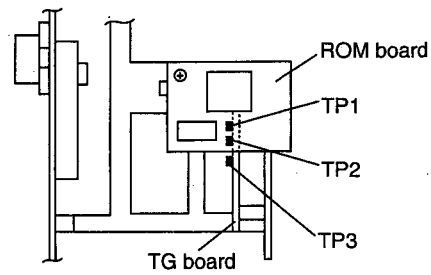

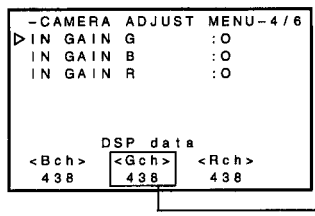

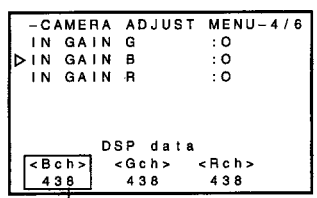

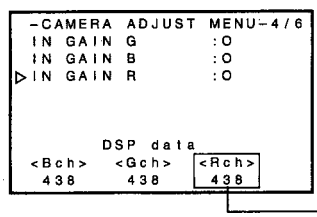

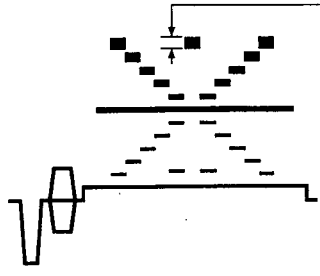

No.	Item	Measuring instruments & Input signals	Mode	Measuring point (◎) Adjustment parts (ⓣ) Adjustment level (☆)	Adjustment procedure

3.5.5 Flare Correction Adjustments

1 Flare adjustment

- Measuring instruments & Input signals: • Oscilloscope (H-rate, 10:1) or WFM • Gray scale chart (precisely scanned size)
- Mode: Adjustment menu 5/6

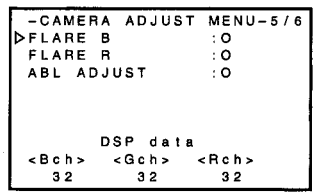

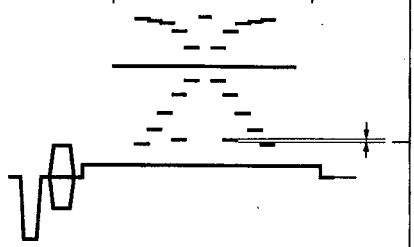

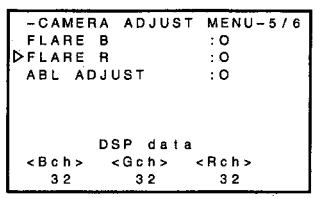

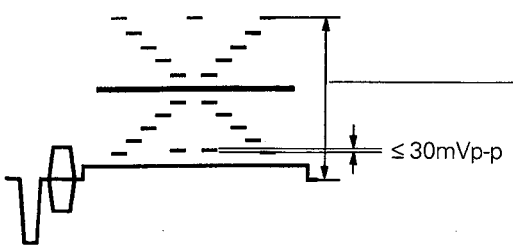

◎ TEST OUT
(75 Ω terminated)
ⓣ Lens iris
☆

NTSC	0.714 Vp-p
PAL	0.7 Vp-p

⇩
Opened by 1 f-stop

(1) Rotate the SHUTTER/MENU dial to select MENU 5/6: ABL.
(2) Shoot the gray scale chart and adjust the lens iris so that the white peak level is 0.714 Vp-p.
(3) Open the iris by 1 stop further.

◎ TEST OUT
(75 Ω terminated)
ⓣ SHUTTER/MENU dial
☆ Minimize window black carrier leakage.

(4) Rotate the SHUTTER/MENU dial to select MENU 5/6: FLARE <B>.
(5) Push the SHUTTER/MENU dial so that the adjustment value blinks then rotate it to adjust to the specified level.
(6) Push the SHUTTER/MENU dial to store the adjustment data in memory.

◎ TEST OUT
(75 Ω terminated)
ⓣ SHUTTER/MENU dial
☆ Minimize window black carrier leakage.

(7) Rotate the SHUTTER/MENU dial to select MENU 5/6: FLARE <R>.
(8) Push the SHUTTER/MENU dial so that the adjustment value blinks then rotate it to adjust to the specified level.
(9) Push the SHUTTER/MENU dial to store the adjustment data in memory.

◎ TEST OUT
(75 Ω terminated)
ⓣ SHUTTER/MENU dial
☆ Minimize window black carrier leakage.

(10) Minimize the black carrier leak signal of the gray scale window by repeating the steps (4) to (9).

◎ TEST OUT
(75 Ω terminated)
ⓣ Lens iris
☆ 0.714 Vp-p (100 IRE)

NTSC	0.714 Vp-p
PAL	0.7 Vp-p

(11) Adjust the lens iris to return the white peak of the gray scale to 0.714 Vp-p(NTSC) 0.7 Vp-p(PAL).
(12) Ensure that the level of the black section of the window is no more than 30 mVp-p.

No.	Item	Measuring instruments & Input signals	Mode	Measuring point (◎) Adjustment parts (ⓣ) Adjustment level (☆)	Adjustment procedure
2	ABL adjustment	• Oscilloscope (H-rate, 10:1) or WFM • Gray scale chart (precise scanned size)	Adjustment menu 5/6	◎ TEST OUT (75 Ω terminated) ⓣ SHUTTER/MENU dial ☆ Gray scale chart window black level: NTSC: 110 +5/–0 mVp-p PAL: 55 +5/–0 mVp-p	(1) Rotate the SHUTTER/MENU dial to select MENU 5/6: ABL. (2) Push the SHUTTER/MENU dial so that the adjustment value blinks then rotate it to adjust to the specified level. (3) Push the SHUTTER/MENU dial to store the adjustment data in memory.

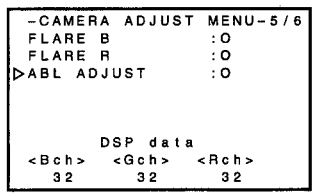

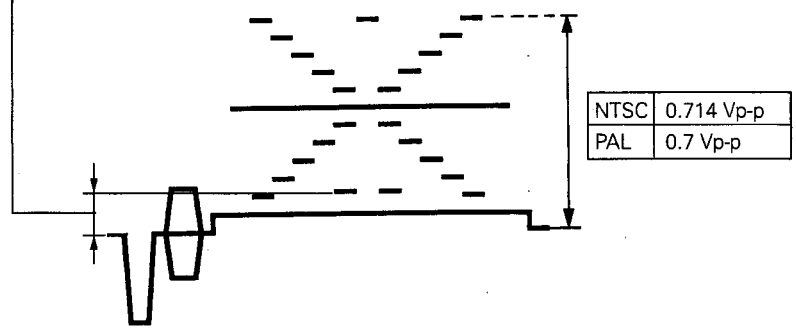

3.5.6 Iris Level Adjustment

No.	Item	Measuring instruments & Input signals	Mode	Measuring point (◎) Adjustment parts (ⓣ) Adjustment level (☆)	Adjustment procedure
1	IRIS LEVEL adjustment	• Oscilloscope (H-rate, 10:1) or WFM • Monitor TV • Gray scale chart (precise scanned size)	Adjustment menu 6/6	◎ TEST OUT (75 Ω terminated) ⓣ SHUTTER/MENU dial ☆ NTSC: 0.714 ± 0.03 Vp-p PAL: 0.7 ± 0.03 Vp-p	(1) Rotate the SHUTTER/MENU dial to select MENU 6/6: IRIS LEVEL. (2) Push the SHUTTER/MENU dial so that the adjustment value blinks then rotate it to adjust to the specified level. (3) Push the SHUTTER/MENU dial to store the adjustment data in memory.

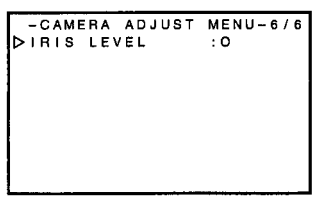

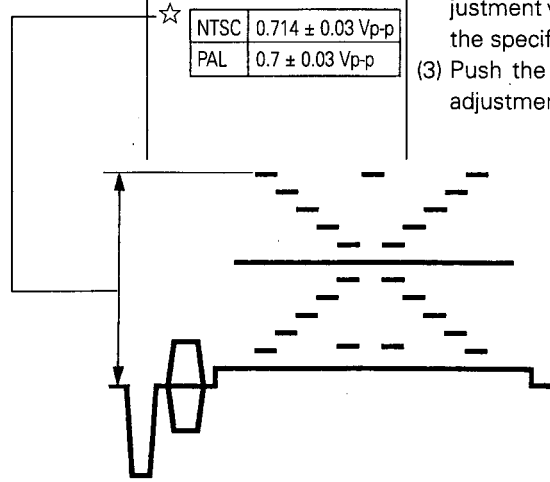

3.6 VCR ADJUSTMENTS

3.6.1 Audio Circuitry Adjustments

Before adjustments, set the audio switches, menu and potentiometer as follows.

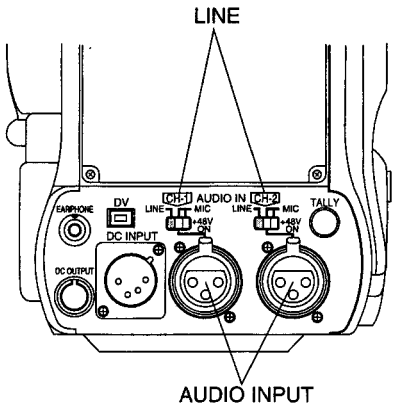

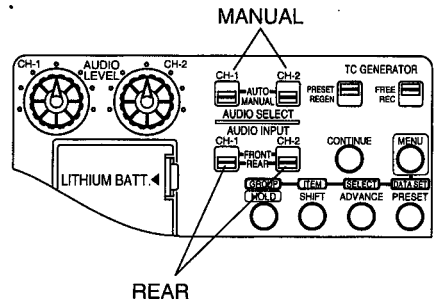

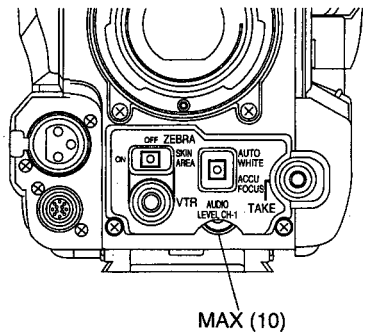

ITEM MENU
AUDIO

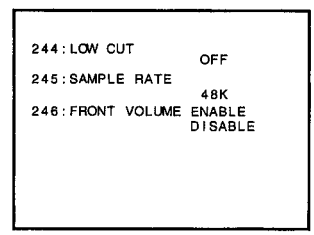

* Refer to page 67 of the instruction book.

• Potentiometer and measuring points for adjustments

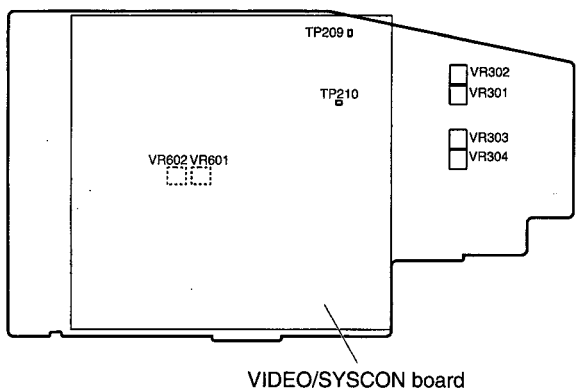

AUDIO/LCD board

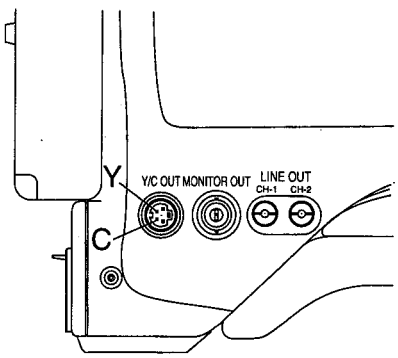

Y/C OUT terminal

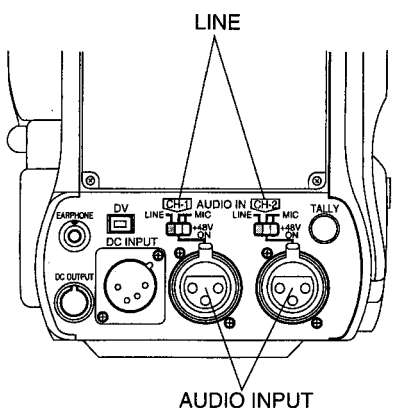

Rear panel

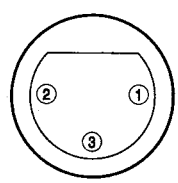

No.	SIGNAL
①	GND
②	HOT
③	COLD

AUDIO IN connector

No.	Item	Measuring instruments & Input signals	Mode	Measuring point (◎) Adjustment parts (ⓣ) Adjustment level (☆)	Adjustment procedure

3.6.2 Audio Circuitry Adjustments

Note : Before proceeding to section "3.5.2 Audio Circuitry Adjustments", complete "3.6.10 Audio Circuitry Adjustment of DV Unit".

1	Preparation				Before adjustments, set the audio switches, menu and potentiometer as follows: **[Switches]** AUDIO IN : LINE AUDIO INPUT : REAR AUDIO SELECT : MANU **[Menu]** LOW CUT : OFF SAMPLING RATE : 48KHz FRONT VOLUME ENABLE : DISABLE **[Potentiometer(Front panel)]** AUDIO LEVEL CH1 : MAX (10)
2	INPUT LEVEL adjustment	• 1kHz,+4dBs • Audio tester	EE	◎ TP209 (CH1) [AUDIO LCD] ⓣ VR201 (CH1) [AUDIO LCD] ◎ TP210 (CH2) [AUDIO LCD] ⓣ VR202 (CH2) [AUDIO LCD] ☆ –22 dBs	(1) Apply a +4 dBs signal to the AUDIO INPUT connector of REAR and adjust the adjustment points so that the levels at the measuring points are as specified.
3	OUTPUT LEVEL adjustment	• 1kHz,+4dBs • Audio tester	EE	◎ LINE OUT ⓣ VR302 (CH1) [AUDIO LCD] ⓣ VR303 (CH2) [AUDIO LCD] ☆ –6 dBs	(1) Perform this adjustment after completing 2 above. (2) Apply a +4 dBs signal to the AUDIO INPUT connector of REAR and adjust the adjustment points so that the levels at the measuring points are as specified.
4	Record/play level adjust-ment	• 1kHz,+4dBs •Audio tester	Self-recording/ playback	◎ LINE OUT ⓣ VR301 (CH1) [AUDIO LCD] ⓣ VR304 (CH2) [AUDIO LCD] ☆ –6 dBs	(1) Perform this adjustment after completing 2 and 3 above. (2) Apply a +4 dBs signal to the AUDIO INPUT connector of REAR and record the audio onto tape. (3) Play the tape recorded in (2) and adjust the adjustment points so that the levels at the measuring points are as specified.
5	Level meter adjustment	• 1kHz,+4dBs	EE	◎ LCD ⓣ VR601 (CH1) [AUDIO LCD] ⓣ VR602 (CH2) [AUDIO LCD] ☆ LCD's audio level meter display: "–20"	(1) Perform this adjustment after completing 2,3 and 4 above. (2) Apply a +4 dBs signal to the AUDIO INPUT connector of REAR and adjust the adjustment points so that the audio level meter of LCD indicates "–20" for both channels.

No.	Item	Measuring instruments & Input signals	Mode	Measuring point (◎) Adjustment parts (ⓣ) Adjustment level (☆)	Adjustment procedure

3.6.3 Video Circuitry Adjustments

1	SETUP PULSE adjustment	• Oscilloscope (V-rate, 10:1) • MC-1:NTSC MC-2:PAL (alignment tape) color bar section 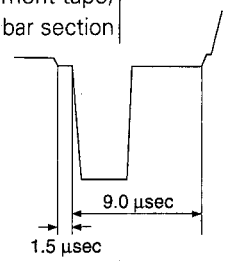	PB SETUP: ON (MENU)	◎ TP3[VIDEO/SYSCON] ⓣ VR2[VIDEO/SYSCON] ☆ 9.0 ± 0.1 µs ⓣ VR3[VIDEO/SYSCON] ☆ 1.5 ± 0.1 µs	(1) Play the color bar section of alignment tape MC-1 / MC-2. (2) Adjust the adjustment point so that the initial duration of the SETUP pulse (see diagram on the left) is as specified. (3) Adjust the adjustment point so that the negative-going duration of the SETUP pulse is as specified.
2	DELETE PULSE adjustment (NTSC only)	• Oscilloscope (V-rate, 10:1) • MC-1 (alignment tape) color bar section	PB SETUP: ON (MENU)	◎ TP2[VIDEO/SYSCON] ⓣ VR4[VIDEO/SYSCON] ☆ 1.23 ms 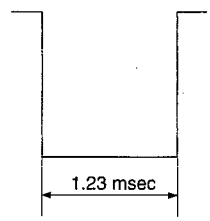	(1) Play the color bar section of alignment tape MC-1. (2) Adjust the adjustment point so that the pulse duration at the measuring point is as specified.
3	Y LEVEL adjustment 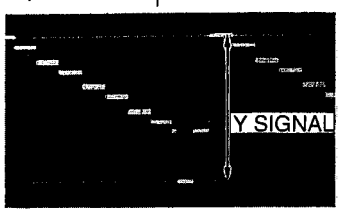	• Oscilloscope (H-rate)	Color bar EE	◎ Y signal output (75Ω terminated) ⓣ VR6[VIDEO/SYSCON] ☆ 1.0 Vp-p	(1) Set the camera to the color bar mode. (2) With the VCR set to EE, adjust the adjustment point so that the Y signal level in Y/C OUT is as specified.
			Color bar EE	◎ Y signal output (75Ω terminated) ⓣ Adjustment software ☆ 1.0 Vp-p	(3) Adjust the Y signal level to the specified level using the adjustment software (see section 3.7.9-1).
4	C LEVEL adjustment 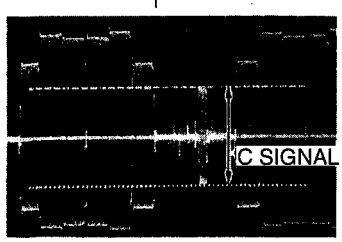	• Oscilloscope (H-rate)	Color bar EE	◎ C signal output(75Ω terminated) ⓣ VR5[VIDEO/SYSCON] ☆ NTSC 0.286 Vp-p PAL 0.3 Vp-p burst level	(1) Set the camera to the color bar mode. (2) With the VCR set to EE, adjust the adjustment point so that the C signal level in Y/C OUT is as specified.
			Color bar EE	◎ C signal output (75Ω terminated) ⓣ Adjustment software ☆ NTSC 0.286 Vp-p PAL 0.3 Vp-p burst level	(3) Adjust the C signal level to the specified level using the adjustment software (see section 3.7.9-2).

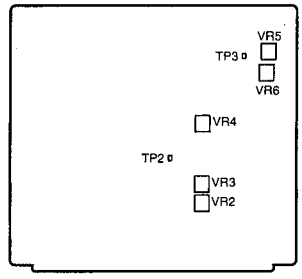

VIDEO/SYSCON board

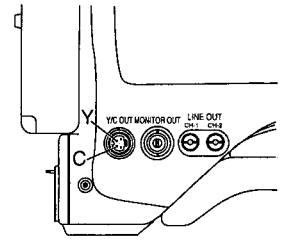

Y/C output

3.7 DV ADJUSTMENTS (USING ADJUSTMENT SOFTWARE)

3.7.1 Precautions

(1) The adjustments of the DV circuit (VTR Unit) of this model require a PC. These adjustments are necessary after replacement of the following parts.

- EEPROM (IC103 on DV Main board)
- Mechanism parts

In case of a problem with the electrical circuit, be sure to identify the point of the trouble first by using measuring instruments. Do not proceed to repair, replacement or adjustment unless the location of the trouble has been identified.

(2) When observing a TP on a chip, avoid applying stress by using an IC clip, etc. In order to prevent the pattern from being peeled off when replacing a chip part, particularly in the case of an IC, remove the solder completely before removing the part.

(3) The connectors tend to be broken easily. Be careful when unplugging or plugging a wire.

(4) Before starting any adjustments, be sure to save the EEPROM data in a PC file for use as backup data in case of an adjustment failure (see section 3.7.12).

(5) When the adjustment software is run, a tape can be recorded even if its REC SAVE tab is set to "SAVE". Be careful not to record anything onto an alignment tape by mistake.

(6) When the adjustment software is run, the operations performed on the main unit do not cause the VCR Unit to function accordingly.

(7) When loading a tape into the GY-DV500, at the same time the power is turned on while the tape is loaded, the unit automatically enters the REC PAUSE mode. To cancel the REC PAUSE mode, press the STOP buttons both of the main unit and of the adjustment software.

(8) When the adjustment software is run, set the Menu switch "VIDEO 126 :INPUT SELECT" to "IEEE1394" . (Only U-ver.)

3.7.2 Equipment Required for Adjustments

① PC (Windows machine. Recommended CPU: Pentium 133 MHz or more)
② Color TV monitor
③ Oscilloscope (2-trace, 100 MHz or more)
* 300 MHz or more recommended.
④ Digital voltmeter
⑤ Frequency counter (with threshold level adjustment)
⑥ Tape for use in recording/playback (JVC ME60)
⑦ Cleaning tape

3.7.3 Setup for PC Adjustment

Note: This switch is not used with the adjustments of the GY-DV500.

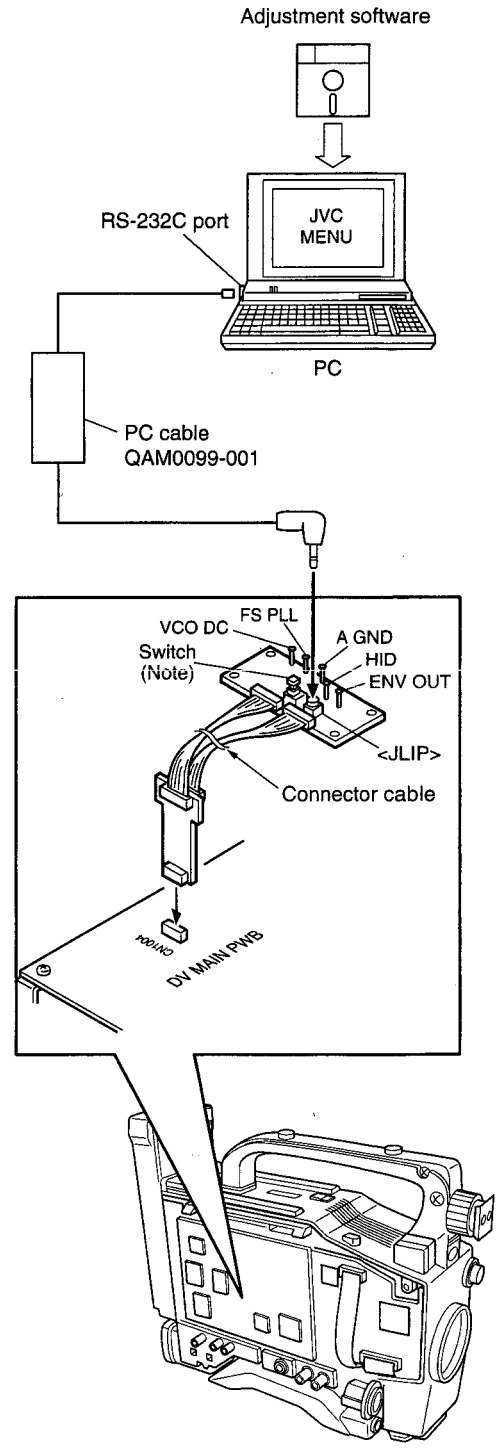

Fig. 3-7-1 Setup for PC Adjustment

3.7.4 Installing the Adjustment Software

Insert the floppy disk of the adjustment software and run "Setup.exe". "Professional DV Adjustment" will be created in "Program" under the Start menu.

3.7.5 Operating the Adjustment Software

1. Startup

Execute "Professional DV Adjustment". When the following screen appears, click <OK> because the adjustment software automatically reads the EEPROM data at the start.

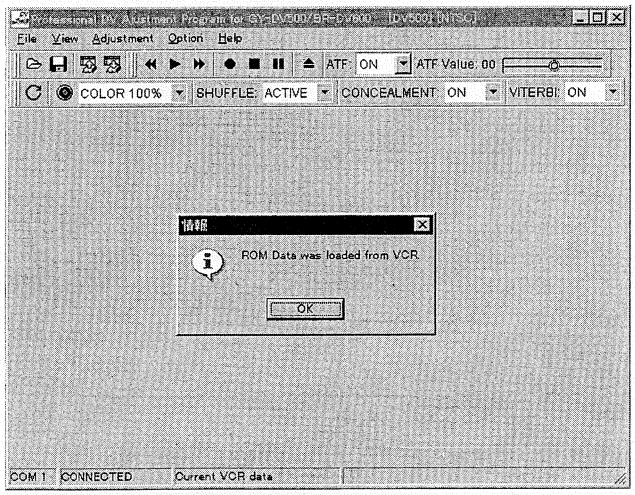

Fig. 3-7-2

The following screen appears when [System Option...] under the [Option] tab is clicked, or the first time that the software is started up. Select the "TV System" and "Model" and click <OK>. This setting is also operative during the next startup. (With the domestic models, select "NTSC" (or "PAL" and "GY-DV500".)

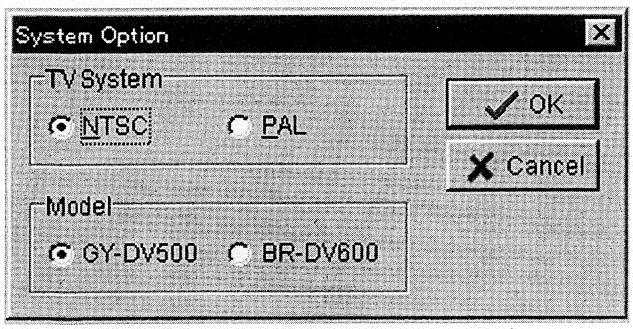

Fig. 3-7-3

If the set "TV System" differs from the setting in the adjustment software, the following warning message appears. Set "TV System" correctly. If the IEEE 1394 ID is not set, the message appears too. Set the ID correctly. (See 3.6.13)

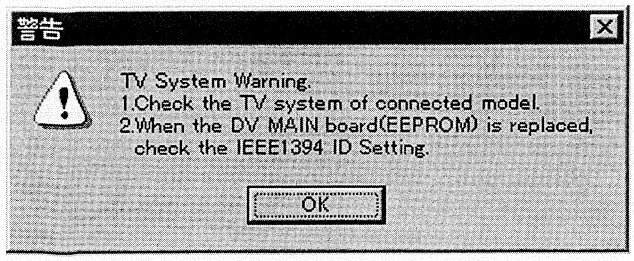

Fig. 3-7-4

2. Function description

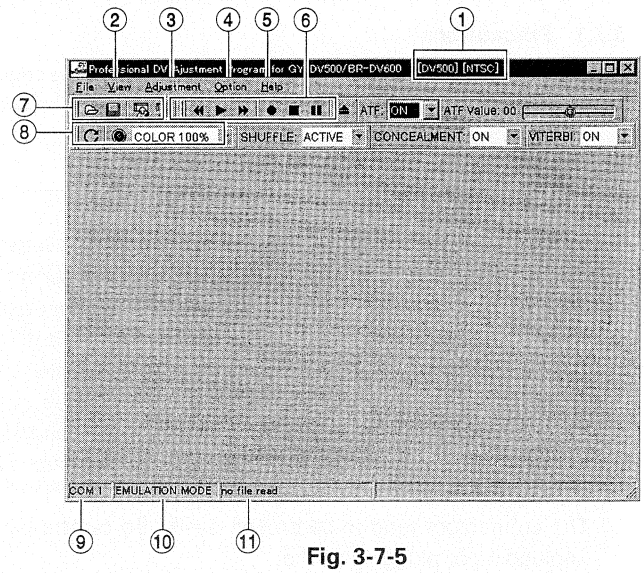

Fig. 3-7-5

① TV System and Model window
Shows the TV system and model selected for the software in [System Option...].

② [View] tab

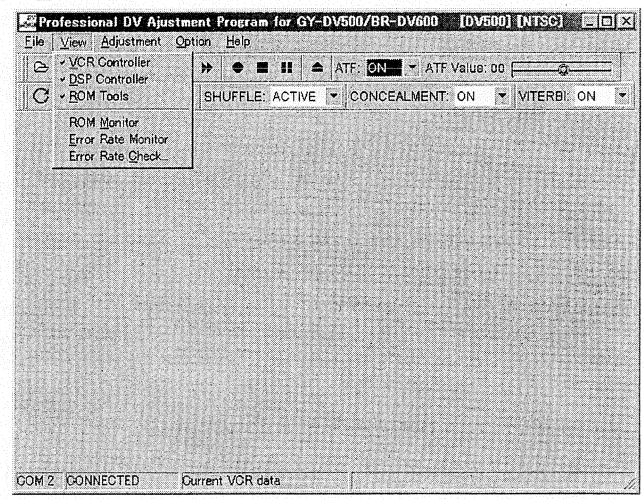

Fig. 3-7-6

- VCR Controller " ⑥ "
- DSP Controller " ⑧ "
- ROM Tools " ⑦ "
- ROM Monitor
- Error Rate Monitor
- Error Rate Check

Switch each item ON or OFF.
The details will be described later.

③ [Adjustment] tab
- Adjustment Explorer (Adjustment menu)
- Active Head Cleaner Adjustment
  Forced operation mode for use in adjusting the position of the active head cleaner installation. (See 3.7.14.)

Switch each item ON or OFF.

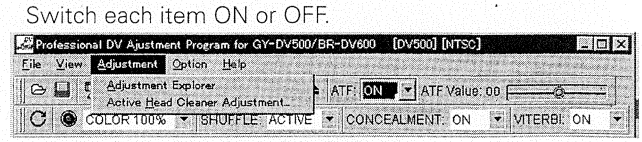

Fig. 3-7-7

④ [Option] tab

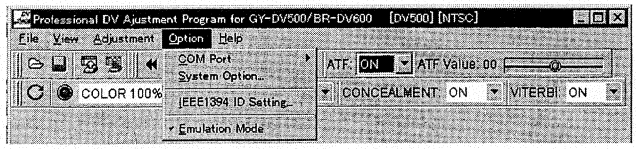

Fig. 3-7-8

- COM Port selection
  From COM1 to COM4, select the COM port to which the communication cable is connected.
- System Option...
  Select the TV signal format and the model of the connected VCR.
- IEEE1394 ID Setting
  ID setting utility of the IEEE1394 standard. (See 3.7.13.)
- Emulation Mode ON/OFF
  The emulation mode makes it possible to use the adjustment software even when communication with the VCR is not available. As the following window is displayed in case of a communication error, check "Enter the Emulation Mode".

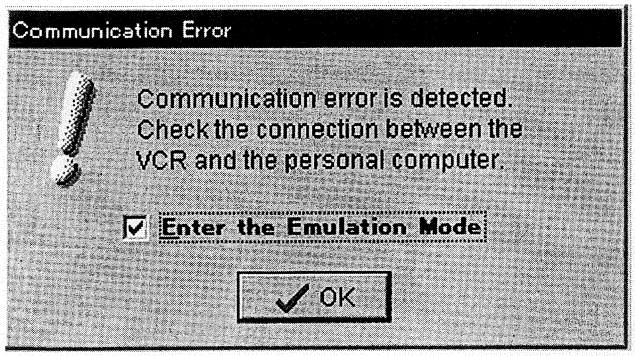

Fig. 3-7-9

⑤ [Help] tab
Displays the version information of the adjustment software.

⑥ VCR Controller
Controls the VCR operations.

⑦ ROM Tools
Used to check, save, print, modify the memory in the EEPROM (IC103 on DV Main board) or to initialize it. (See 3.7.12.)

⑧ DSP Controller
Used to control the TV signal generator in the VTR Unit, switch SHUFFLE, CONCEALMENT and VITERBI ON/OFF. Clicking "↻" resets them to the defaults.

⑨ COM port display
Shows the COM port in use.

⑩ Communication status display
Shows one of the following messages according to the communication status.
CONNECTED: Normal communication
UNKNOWN: Communication error
EMULATION MODE: In emulation mode

⑪ ROM file display
Shows the file name or "Current VCR data" while a ROM tool reads EEPROM data. Clicking [ROM Monitor] under the ② [View] tab displays the data contents.

3.7.6 Common Operations for Adjustments

Note: Before adjustment, be sure to save the EEPROM data in a PC file as the backup for use in case of adjustment failure. (See 3.6.12.)

(1) Under the [Adjustment] tab, check [Adjustment Explorer].

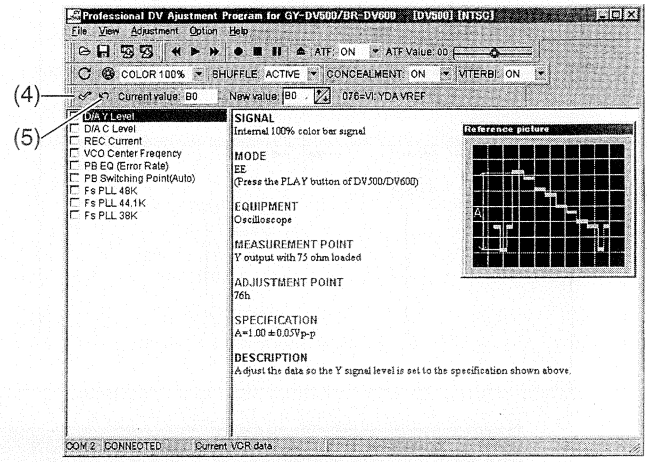

Fig. 3-7-10

(2) Click the desired adjustment items.
(3) To monitor the video output from the VCR Unit, press the PLAY button of the operation switches of the main unit. If the color bar signal has been recorded in the VCR Unit, the playback screen becomes as shown below, but this is not a malfunction (BR-DV600).

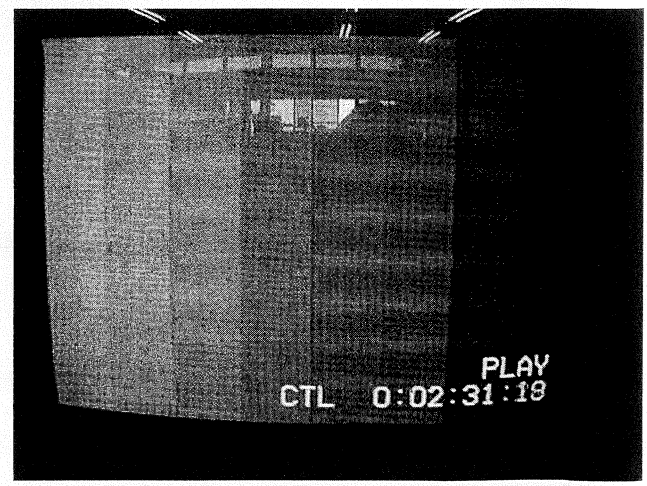

Fig. 3-7-11

(4) After completing each adjustment item, click the "v" marking, then switch the set OFF.
(5) To cancel the adjutment, click the "G" marking.
Note: If another adjustment is started without clicking the "v" marking, the previous adjustment cannot be stored in memory.

No.	Item	Measuring instruments & Input signals	Mode	Measuring point (◎) Adjustment parts (⇧) Adjustment level (☆)	Adjustment procedure

3.7.7 Servo Circuit Adjustment

1	PB switching point adjustment	• Alignment tape MC-1, color bar	PB	Automatic adjustment ☆ Adjustment is performed automatically so that the timings of HID and SPA signals are as shown below.	(1) Click [PB Switching Point (Auto)]. (2) Click [OK] to start automatic adjustment. (3) Message "Complete" is displayed when the adjustment has completed successfully. If it is unsuccessful, the message "Adjustment failed" is displayed; try adjustment again.

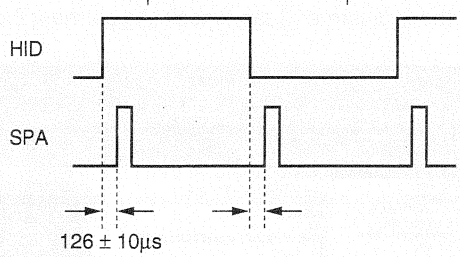

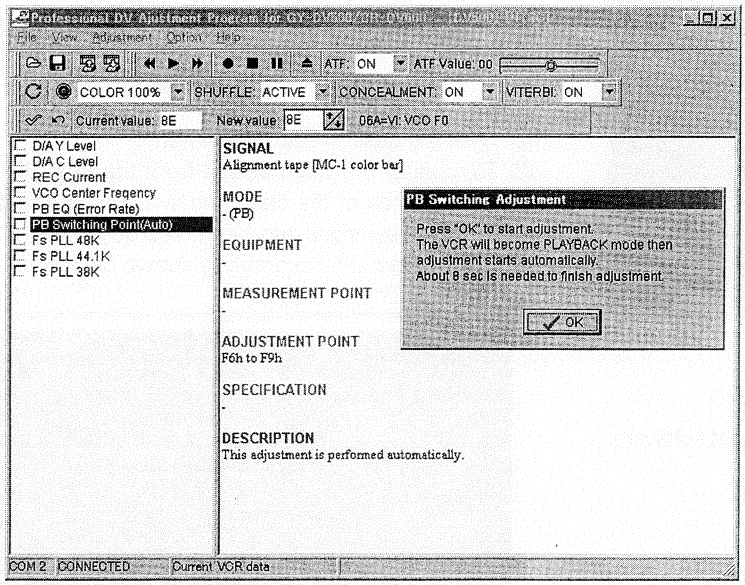

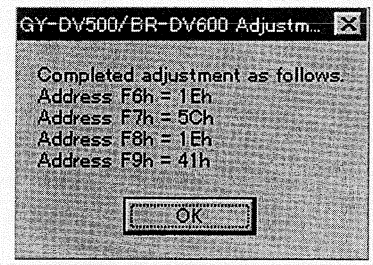

"Complete" message

"failed" message

No.	Item	Measuring instruments & Input signals	Mode	Measuring point (◎) Adjustment parts (ⓣ) Adjustment level (☆)	Adjustment procedure

3.7.8 RF Circuit Adjustment

1	REC current adjustment	• Internal Color bars (100%) • Oscilloscope	REC	◎ TP REC MON (connector cable) ⓣ 6Ch ☆ 440 ± 20 mVp-p	**Note: Connect TP to the section indicated [REC MON] on the jig connector in advance.** (1) Click [REC Current]. (2) Click the [OK] button. (3) Adjust "New value" (address "6Ch") so that the level becomes the adjustment level. (4) After adjustment, click the "v" marking and set the power button of the set to OFF.
2	VCO center frequency adjustment	• Internal Color bars (100%) • Digital voltmeter	REC ↓ PB	◎ TP VCO DC (connector cable) ⓣ 6Ah ☆ 1.925 ± 0.025 V	(1) Click [VCO Center Frequency]. (2) Click the [OK] button. (3) Play the tape section containing color bars. (4) Adjust "New value" (address "6Ah") so that the level becomes the adjustment level. (5) After adjustment, click the "v" marking and set the power button of the set to OFF.

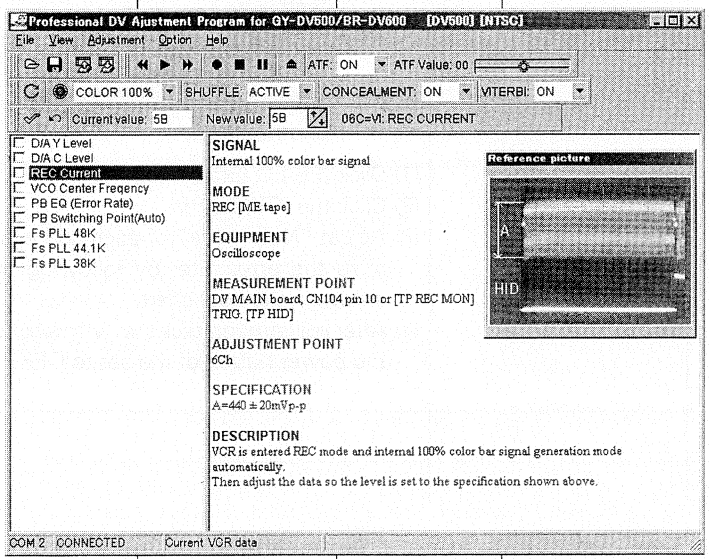

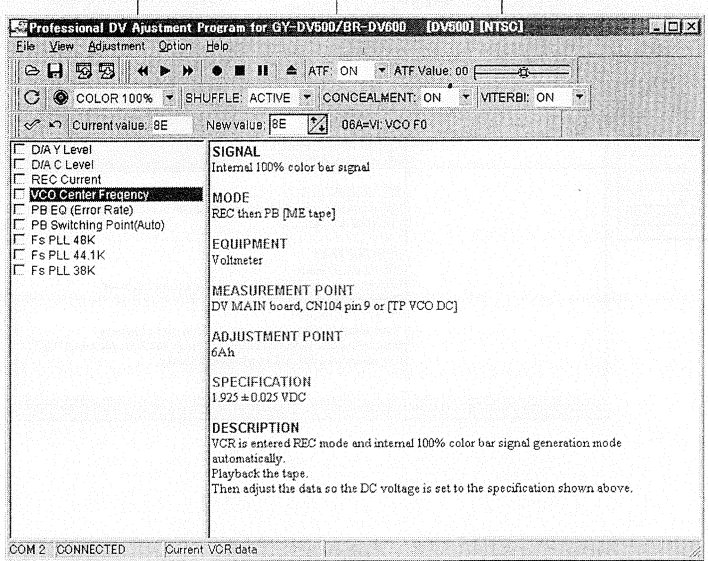

No.	Item	Measuring instruments & Input signals	Mode	Measuring point (◎) Adjustment parts (ⓣ) Adjustment level (☆)	Adjustment procedure
3	PB EQ (Error rate) adjustment	• Internal color bars (100%) • PC	• REC ↓ PB • VITERBI : OFF	◎ PC monitor ⓣ 68 h, 69h, 67h, 6Bh, 63h, 64h ☆ Minimize error rate (Total less than 1000, and less than 500 at each channels)	**Notes:** • Use a new tape or non-used section of tape in this adjustment. • Be sure to clean the head before this adjustment. • It takes about 1 second from the data change to its reflection in the error rate. • Also measure the error rate after the "Sync Block" monitor has become perfectly OK. • If the adjustment within specification is not possible, clean the head. If the next adjustment is still out of specification, use another tape. (1) Click [PB EQ (Error rate)]. (2) Click the [OK] button. (3) Adjust "New value" of each address to minimize the error rate, by following the order shown in the flow chart. (4) After adjustment, click the "v" marking and set the power button of the set to OFF.

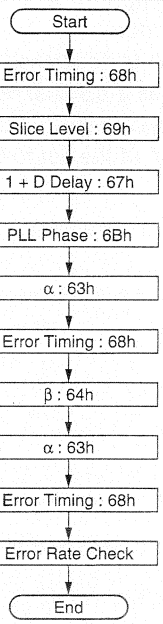

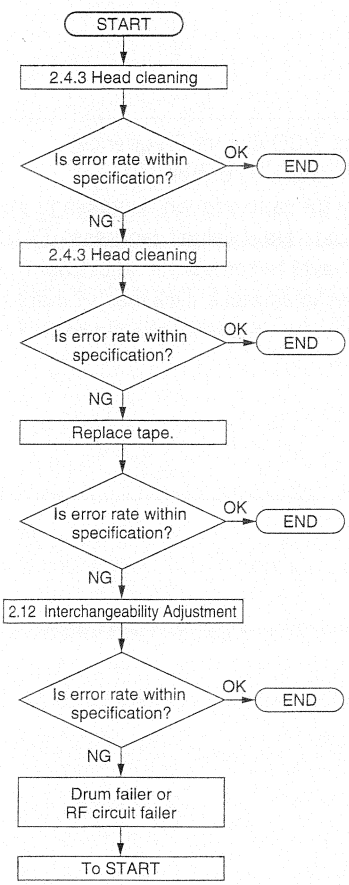

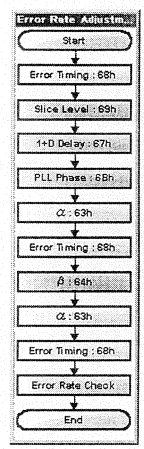

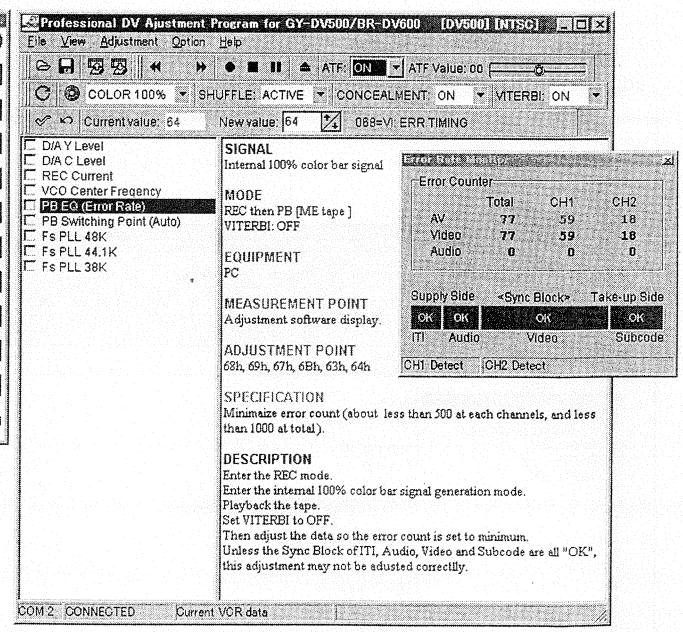

No.	Item	Measuring instruments & Input signals	Mode	Measuring point (◎) Adjustment parts (ⓣ) Adjustment level (☆)	Adjustment procedure

3.7.9 Video Circuit Adjustments

1	D/A Y level adjustment	• Internal color bars (100%) • Oscilloscope	EE (With PLAY lit on the set)	◎ Y OUT (75 Ω terminated) ⓣ 76h ☆ 1.00 ± 0.05 Vp-p	(1) Click [D/A Y Level]. (2) Click the [OK] button. (3) Press the "PLAY" button of the set and check that the LED lights up. (4) Adjust "New value" (address "76h") so that the Y level becomes the adjustment level. (5) After adjustment, click the "v" marking and set the power button of the set to OFF.
2	D/A C level adjustment	• Internal color bars (100%) • Oscilloscope	EE (With PLAY lit on the set)	◎ C OUT (75 Ω terminated) ⓣ 60h ☆ NTSC: 0.286 ± 0.01 Vp-p PAL: 0.30 ± 0.01 Vp-p (Burst)	(1) Click [D/A C Level]. (2) Click the [OK] button. (3) Press the "PLAY" operation button of the set and check that the LED lights up. (4) Adjust "New value" (address "60h") so that the burst level becomes the adjustment level. (5) After adjustment, click the "v" marking and set the power button of the set to OFF.

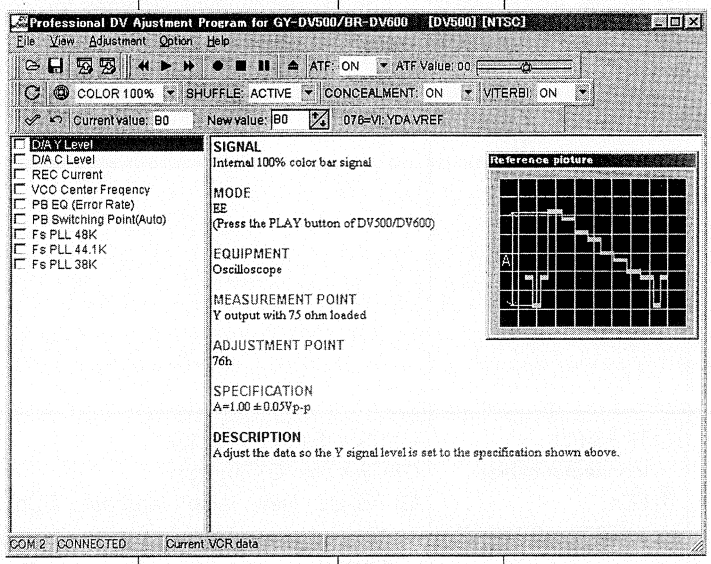

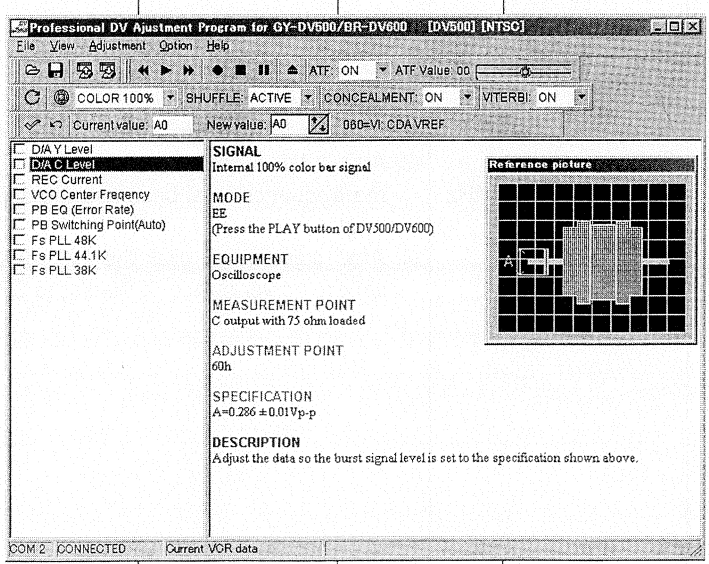

No.	Item	Measuring instruments & Input signals	Mode	Measuring point (◎) Adjustment parts (ⓣ) Adjustment level (☆)	Adjustment procedure

3.7.10 Audio Circuit Adjustment

(Note)

- **Perform the audio circuitry adjustments immediately after turning the main unit ON. Be sure to turn the main unit OFF after completing each adjustment item.**

1	Fs PLL (48k) adjustment 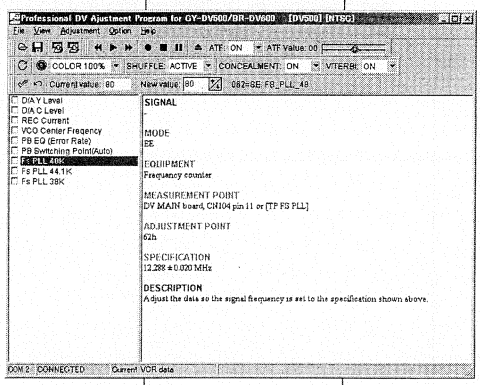	• No signal • Frequency counter	EE	◎ TP FS PLL (connector cable) ⓣ 62h ☆ 12.288 ± 0.020 MHz	(1) Click [Fs PLL (48k)]. (2) Click the [OK] button. (3) Adjust "New value" (address "62h") so that the frequency level becomes the adjustment level. (4) After adjustment, click the "v" marking and set the power button of the set to OFF.
2	Fs PLL (44.1k) adjustment 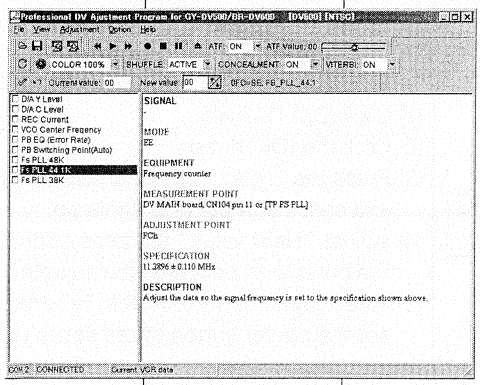	• No signal • Frequency counter	EE	◎ TP FS PLL (connector cable) ⓣ FCh ☆ 11.2896 ± 0.110 MHz	(1) Click [Fs PLL (44.1k)]. (2) Click the [OK] button. (3) Adjust "New value" (address "FCh") so that the frequency level becomes the adjustment level. (4) After adjustment, click the "v" marking and set the power button of the set to OFF.
3	Fs PLL (38k) adjustment 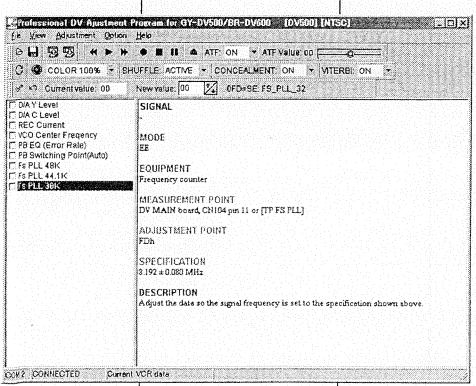	• No signal • Frequency counter	EE	◎ TP FS PLL (connector cable) ⓣ FDh ☆ 8.192 ± 0.080 MHz	(1) Click [Fs PLL (38k)]. (2) Click the [OK] button. (3) Adjust "New value" (address "FDh") so that the frequency level becomes the adjustment level. (4) After adjustment, click the "v" marking and set the power button of the set to OFF.

3.7.11 Error Rate Monitoring

The error rate-monitoring screen is displayed when the PB EQ is adjusted or the error rate is measured. The screen shows the error rate every second during PB EQ adjustment. With the error rate measurement, it shows the error rate measurement result after about 20 seconds of measurement.

(1) Error Rate Monitoring

The following screen appears when [View] under the [Error Rate Monitor] tab is clicked.

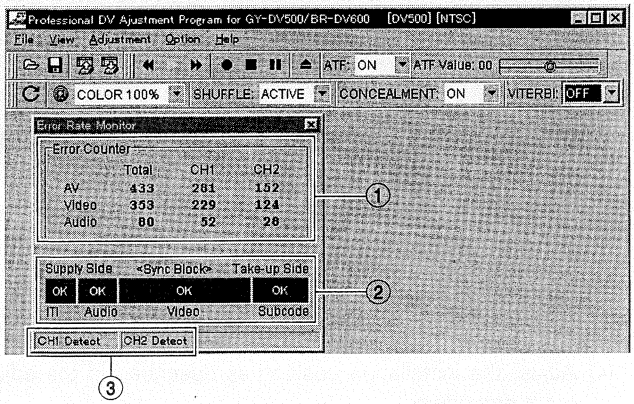

Fig. 3-7-12 (Error Rate Monitoring Screen)

① Error rate display window
Shows the error rate per video/audio or CH-1/CH-2 as well as the total error rate.

② Sync block counter display window
Shows the amount of sync blocks played by the head as a percentage. When it reaches 100%, "OK" is displayed and a graph is displayed bule. The error rates are measured when this display shows "OK".

③ Error rate measurement status display window
Depending on the load to the PC, "CH1 Reset" or "CH2 Reset" may be displayed frequently. In such a case, leave the PC idle (without operating the mouse, etc.). The error rates are measured when "Reset" is not displayed (when "CH1 Detect" or "CH2 Detect" is displayed).

(2) Error Rate Measurement

The following screen appears when [View] under the [Error Rate Check] tab is clcked. To start the measurement, click [Start] button. After a while the measurement result is displayed "①".

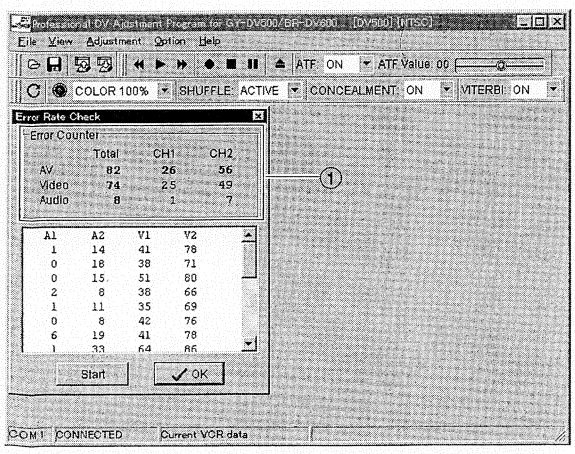

Fig. 3-7-13 (Error Rate Measurment)

3.7.12 ROM Tools

This section describes the seven functions of the ROM Tools in processing the EEPROM data.

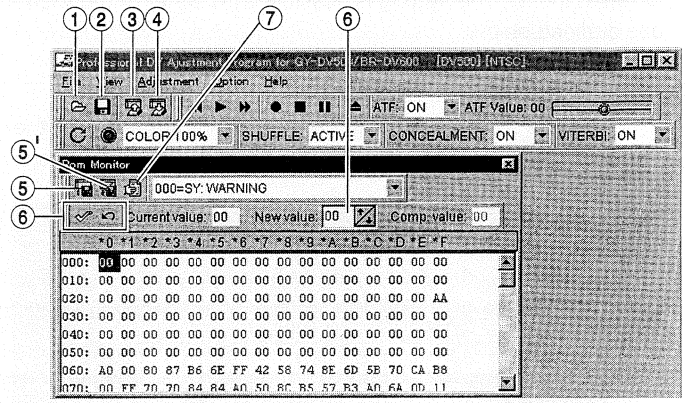

Fig. 3-7-14

① File reading
Read the ROM data saved in the PC files. It is provided as standard with the adjustment software, for use as initial data. When the PC files are read, the file names are displayed in the ROM file display window.

② File saving
The ROM data read by the ROM Tools can be saved in a PC file. This function is used for temporary backup of ROM data before adjustment. If the adjustment fails and the data becomes erroneous, use the backup to restore the original data.

③ Data read from VCR
The ROM data in the VCR can be read. The ROM file display window shows "Current VCR data" in this case.

④ Data write in VCR
The ROM data read by the ROM Tools can be written in the VCR. When the initial data is written, it is required to re-adjust the DV circuit and re-set the IEEE1394 ID (see 3.7.13).

⑤ Data comparison
Note: When the ROM data is written in the VCR, be sure to turn the main unit and adjustment software OFF once.

The ROM data read by the ROM Tools is compared with data contained in a PC file or with the VCR data, and any differences are displayed in red characters. "Comp. value" shows the data used in the comparison. It shows "(" when the comparison data does not exist. To cancel comparsion, clik ⑤'.

⑥ Data editing
The ROM data read by the ROM Tools can be edited on a per-address basis. To edit data, click the [New value] of the required address data. To write the data in the VCR, click the "V" marking. To cancel editting, click the " ↶ " marking.

⑦ Data output
The ROM data read by the ROM Tools can be output at a printer or as a text file.

3.7.13 IEEE1394 ID Setting

The GY-DV500 stores the ID in the format specified by the IEEE1394 standard in the EEPROM (IC103 on DV Main board). After replacing the EEPROM or the DV Main board, it is required to re-set the ID. The setting is possible with either of the methods outlined below.

1. Setting by manual input

(1) Under the [Option] tab of the adjustment software, click the [IEEE1394 ID Setting]. The window as shown below appears.

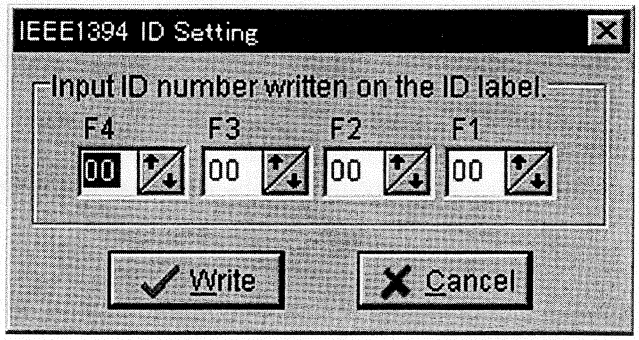

Fig. 3-7-15

(2) The ID ("ID : 0401xxxx" : NTSC, "ID : 0481xxxx" : PAL) is indicated on the ID label number attached to the DV Main board. Input characters corresponding to "0401xxxx" for NTSC or "0481xxxx" for PAL.
(3) Click "Write" to write the ID in the EEPROM.

2. Setting with ROM Tools

(1) Read the data saved in the EEPROM to be replaced. (See 3.7.12.③.)
(2) Save the read data in a PC file. (See 3.7.12.②.)
(3) After the EEPROM replacement, connect the adjustment software to the GY-DV500.
(4) Load the data saved in the PC file. (See 3.7.12.①.)
(5) Write the loaded data in the EEPROM. (See 3.7.12.④.)
(6) Now that the adjustment data in the new EEPROM has been overwritten by the data in the previous EEPROM. Re-adjust the DV circuit as required.

3.7.14 Active Head Cleaner Adjustment Mode

When adjusting the installation position of the active head cleaner, use this mode to force the active head cleaner ON for a certain period. (See subsection 2.7 No. 20 for the adjustment procedure.)

(1) Under the [Adjustment] tab, click [Active Head Cleaner Adjusting...]. The window as shown below appears.

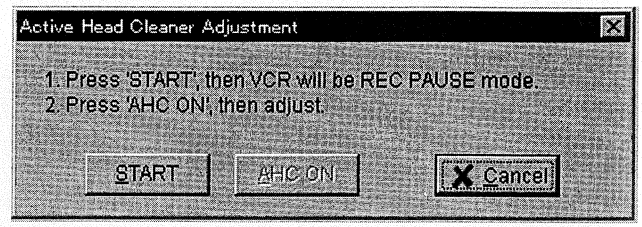

Fig. 3-7-16

(2) Click [START] to set to "REC PAUSE" mode.
(3) Click [ACH ON]. The active head cleaner will turn on in about 3 seconds.
(4) Adjust the installation position as described in the adjustment procedure.

SECTION 4
CHARTS AND DIAGRAMS

■ SCHEMATIC DIAGRAM NOTES

- **Schematic safety precaution**
  ⚠ Parts are safety related parts.
  When replacing them, be sure to use the specified parts.
- **Voltage and waveform measurements**
  Voltage: Measured with digital voltmeter in DC range; iris closed in REC mode.
  Value in ( ) is indicated only in the case PB voltage is different from that in REC mode.
  Waveform: Gray scale illuminated at more than 4000 lux at 3200K lighting.
- **Unit of value**
  Unless otherwise specified
  1) Resistance is in Ω (1/6 W)
  2) Capacitance is in μF
  3) Inductance is in μH

- **Expression of wiring**

As the following circuit diagram is divided to print on some sheets, such an indication as the following is found in the case the wiring extends over two or more divided sections.

1) Circuit diagram divided into two or more sections:

Board	Board Name	Number of divided sections
1 5	CAM 1	1/2 – 2/2
1 6	CAM 2	1/3 –3/3
3 1	VIDEO/SYSCON	1/2 – 2/2
3 2	AUDIO/LCD	1/2 – 2/2
1 0	DV MAIN	1/7 – 7/7
—	OVERALL	1/2 – 2/2

2) Indication of wiring which extends to another section:
(Example)

A)

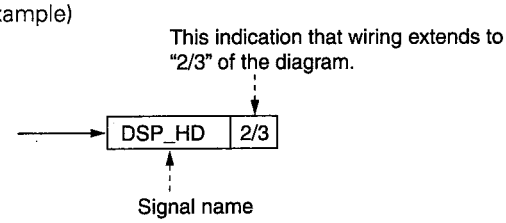

In the above case, the end of the wiring is connected to the "DSP_HD" on the 2nd section of the diagram.

B)

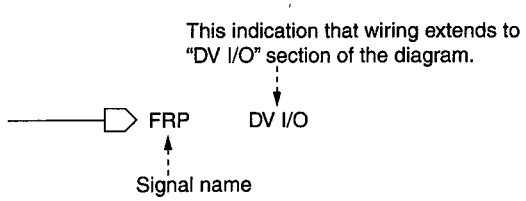

In the above case, the end of the wiring is connected to the "FRP" on the "DV I/O" section of the diagram.

- **Wiring of connector**
  (Example)

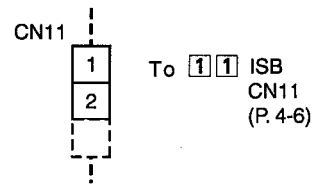

In the above example, CN11 is connected with CN11 on 1 1 ISB board.

- **Signal flow on the diagram**
  The following allow marks indicate the specified signal paths respectively.

  ➡ : Recording or EE signal path
  ⇨ : Playback signal ptah
  ➡ : Recording and Playback signal path

- **Others**

In regard of a board assembly whose circuit is composed of multilayered board patterns such 4- or 6-layered patterns, board patterns of the power supply lines and grounding lines are omitted in this section.

Note: For detail of each electrical part, refer to Section 6 "ELECTRICAL PARTS LIST" by it symbol number.

■ REPLACING SURFACE MOUNT "CHIP" COMPONENTS

- Some resistors, shorting jumpers (0 resistance), ceramic capacitors, transistors, and diodes are chip parts. These chip parts cannot be reused after they are once removed.
- Chip resistors used in some circuits are of high precision type having little error in resistance.
  To demonstrate the full capacity of this set, place an order for proper parts referring to the diagrams and parts lists in the section 5.
- Soldering cautions:
  1) Do not apply heat for more than 3 seconds.
  2) Avoid using a rubbing stroke when soldering.
  3) Discard removed chips; do not reuse them.
  4) Supplementary cementing is not required.
  5) Use care not to scratch or otherwise damage the chips.

■ CHIP PARTS PIN ARRANGEMENT

[1] Digital transistors

DTC 1 □□□□
① ②③

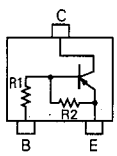

(Top view)

DTA 1 □□□□
DTB 1 □□□□
① ②③

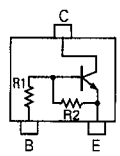

(Top view)

① Two digits show resistance of R1 in abbreviation.
- 43 : 4.7 kΩ
- 14 : 10 kΩ
- 24 : 22 kΩ
- 44 : 47 kΩ

② Roman letter show the resistive ratio between R1 and R2 in abbreviation.
- E : R2/R1 = 1/1
- Y : R2/R1 = 5/1
- W : R2/R1 = 2/1
- X : R2/R1 = 1/2
- T : R2 is opened.

③ Symbol the shape of resistor in abbreviation.

[2] Chip transistors and chip F.E.T.s

2SA □□□□
2SB □□□□

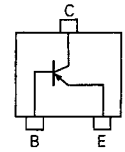

(Top view)

2SC □□□□
2SD □□□□

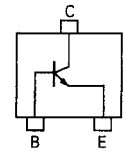

(Top view)

2SK □□□□

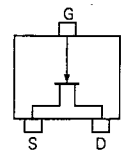

(Top view)

2SJ □□□□

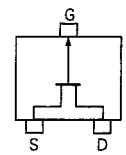

(Top view)

[3] Chip diodes

MA143A/MA742

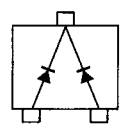

(Top view)

MA142WA

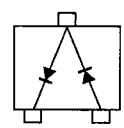

(Top view)

MA142A

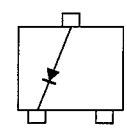

(Top view)

4.1 INDEX TO PAGES OF MAIN BOARDS AND CIRCUIT BOARD LOCATION

4.1.1 Circuit board location

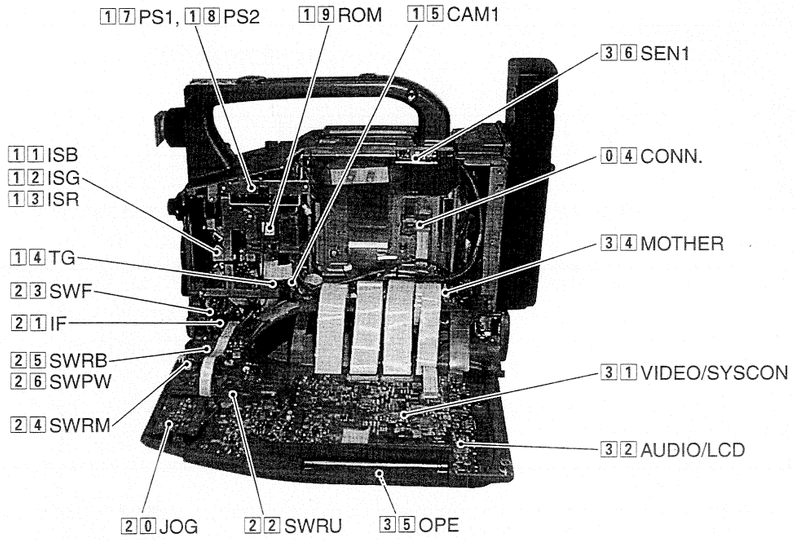

Left side

Board No.	Board Name	Page of diagram		
		Block diagram	Schematic diagram	Circuit board
—	OVERALL	—	4-4	—
—	OVERALL (VTR UNIT)	—	4-42	—
01	PR&MDA	4-66,67	4-52,53	4-54
02	DCDC		4-56	4-57
03	ROM		4-55	4-57
04	CONN.		4-55	4-57
10	DV MAIN	4-66,67	4-43 to 44	4-50,51
02 03 04	ISB ISG ISR	4-58	4-6	4-7
14	TG	4-58	4-8	4-9
15	CAM1	4-59	4-10,11	4-12,13
16	CAM2	4-60	4-14 to 16	4-17,18
17	PS1	—	4-19	4-21
18	PS2	—	4-20	4-21
19	ROM	4-59	4-22	4-23
20	JOG		4-24	4-26
21	IF	4-61	4-22	4-23
22	SWRU	4-61	4-24	4-26
23	SWF	4-61	4-25	4-26
24	SWRM	—	4-25	4-26
25	SWRB	—	4-25	4-26
26	SWPW	—	4-25	4-26
27	MIC	—	4-25	4-26
28	BNC	—	4-25	4-26
29	FL	—	–	4-26
31	VIDEO/SYSCON	4-62,64	4-27,28	4-29
32	AUDIO/LCD	4-63,65	4-30,31	4-32,33

Board No.	Board Name	Page of diagram		
		Block diagram	Schematic diagram	Circuit board
33	REG	4-64	4-34	4-35
34	MOTHER	—	4-36	4-37
35	OPE		4-39	4-41
36	SEN1		4-40	4-41
37	SENS2		4-40	4-42
38	REMOTE		4-40	4-41
39	AU JUNK		4-38	4-37
40	XLR		4-40	4-41
41	PWR JUNC		4-39	4-41
42	CONNECT		4-40	4-41
43	EAR.J		4-40	4-41

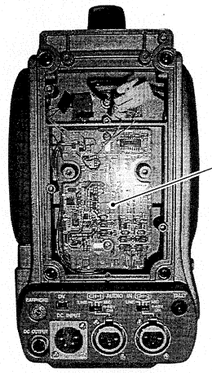

Rear

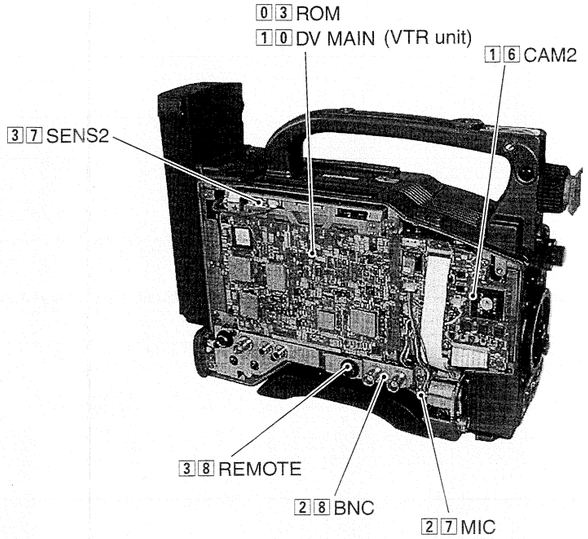

Right side

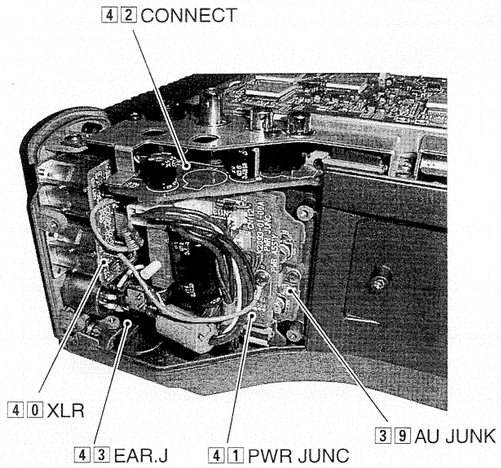

Bottom

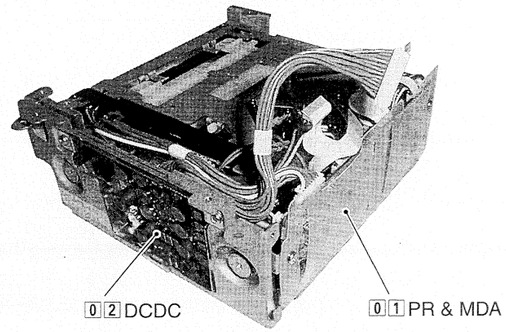

VTR unit

IDE-V27525 / DRUCK: 1

4.2 OVERALL WIRING DIAGRAM (1/2)

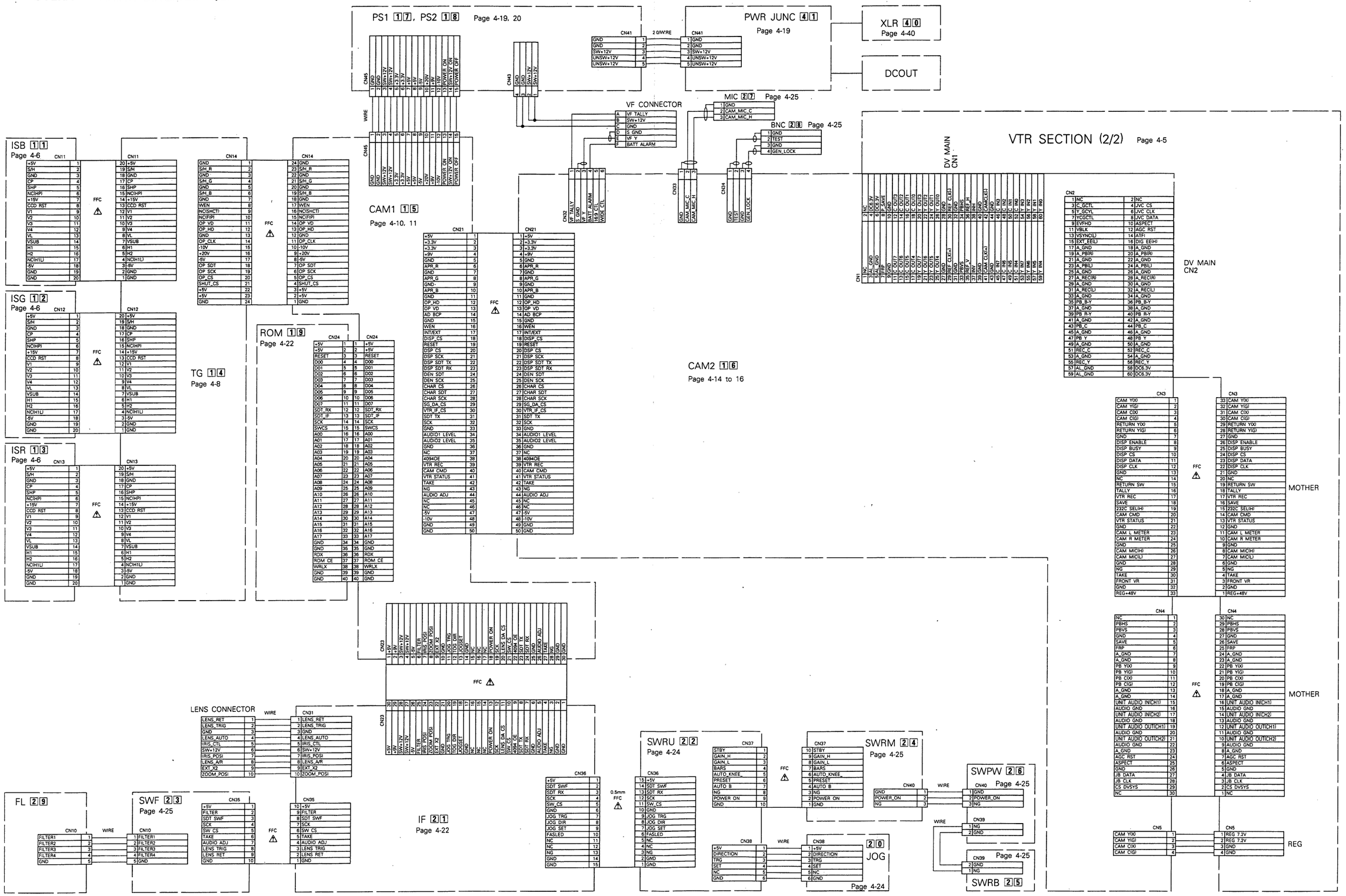

• OVERALL WIRING DIAGRAM (2/2)

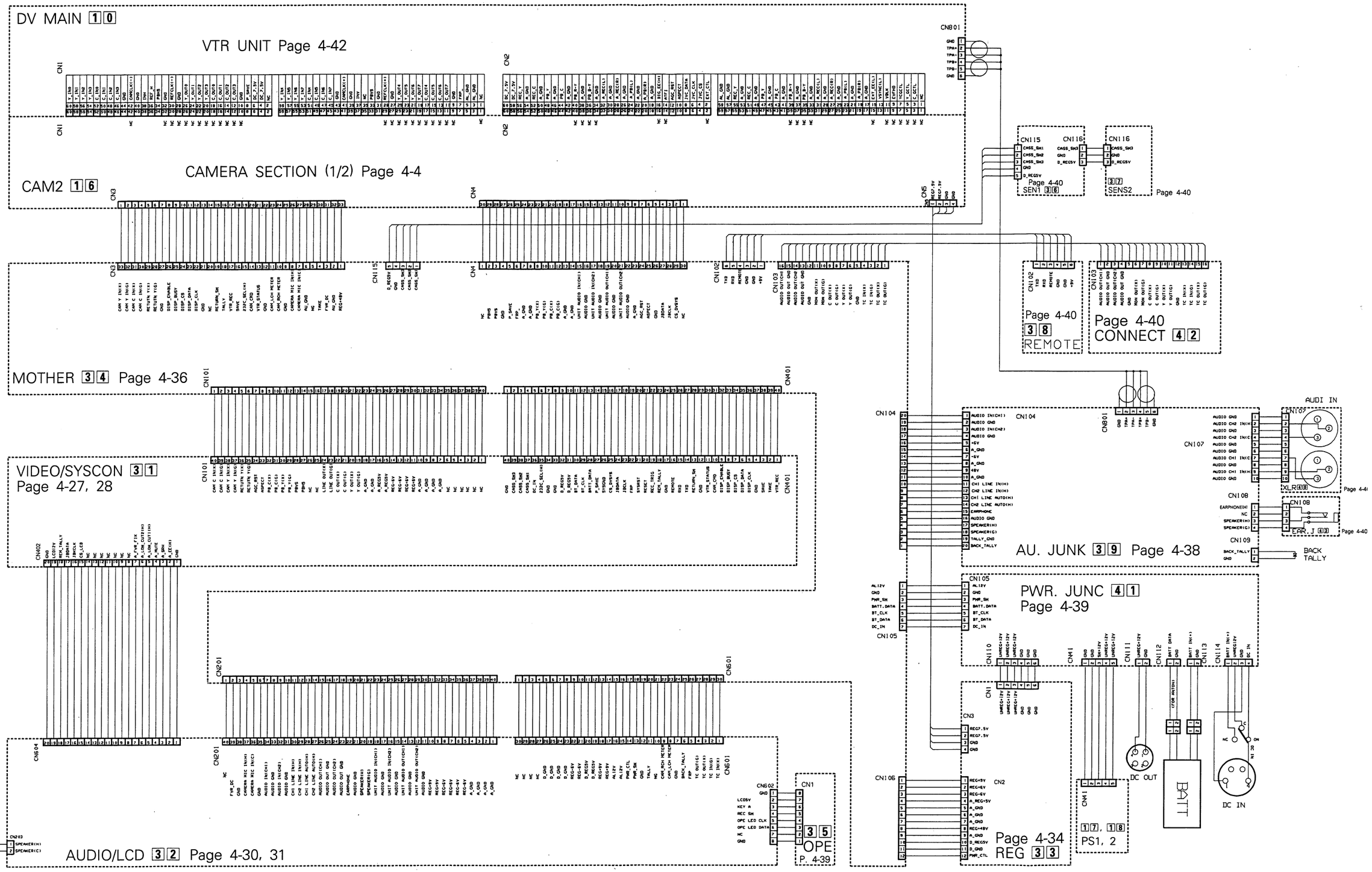

IDE-V27525 / DRUCK: 3

4.3 ISB/ISG/ISR SCHEMATIC DIAGRAM 11/12/13

· ISB

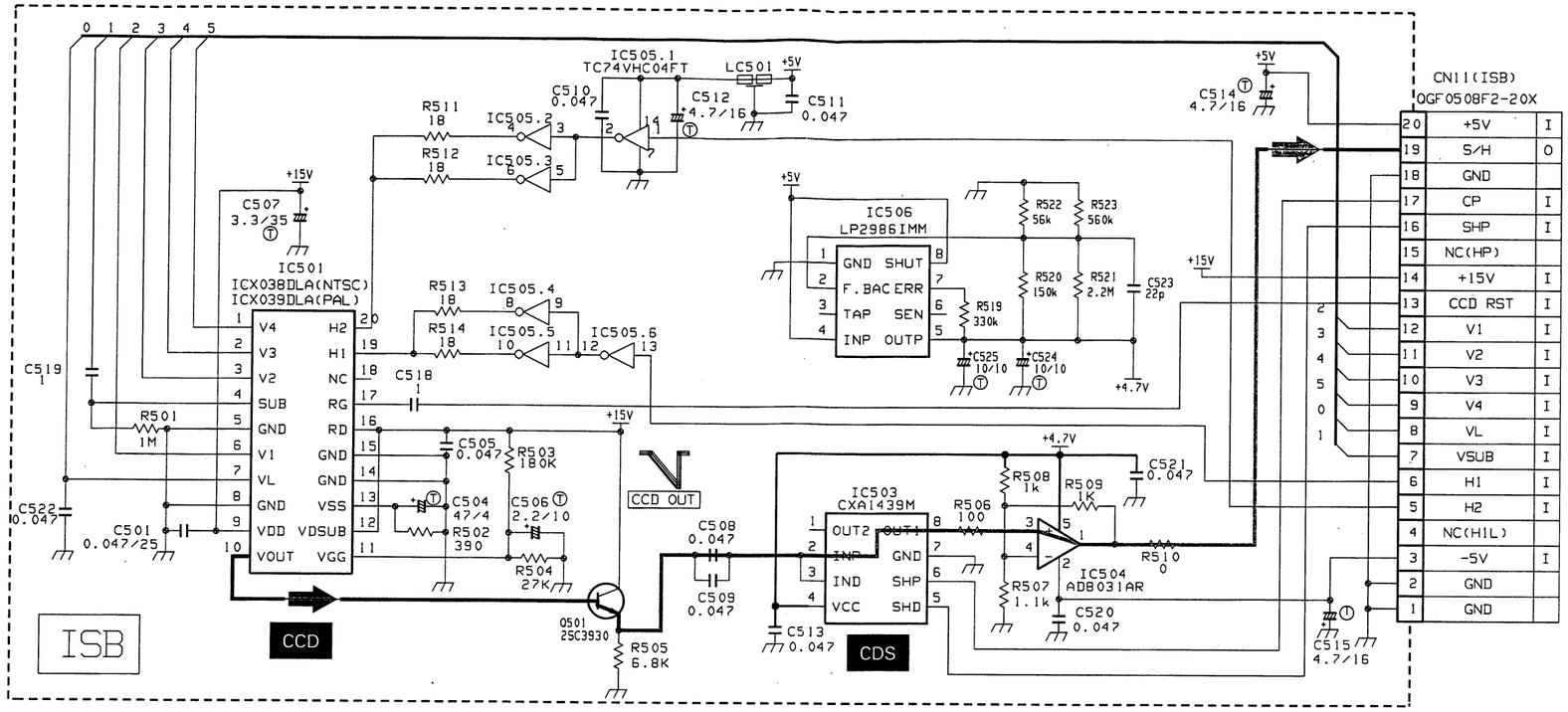

· ISG/ISR

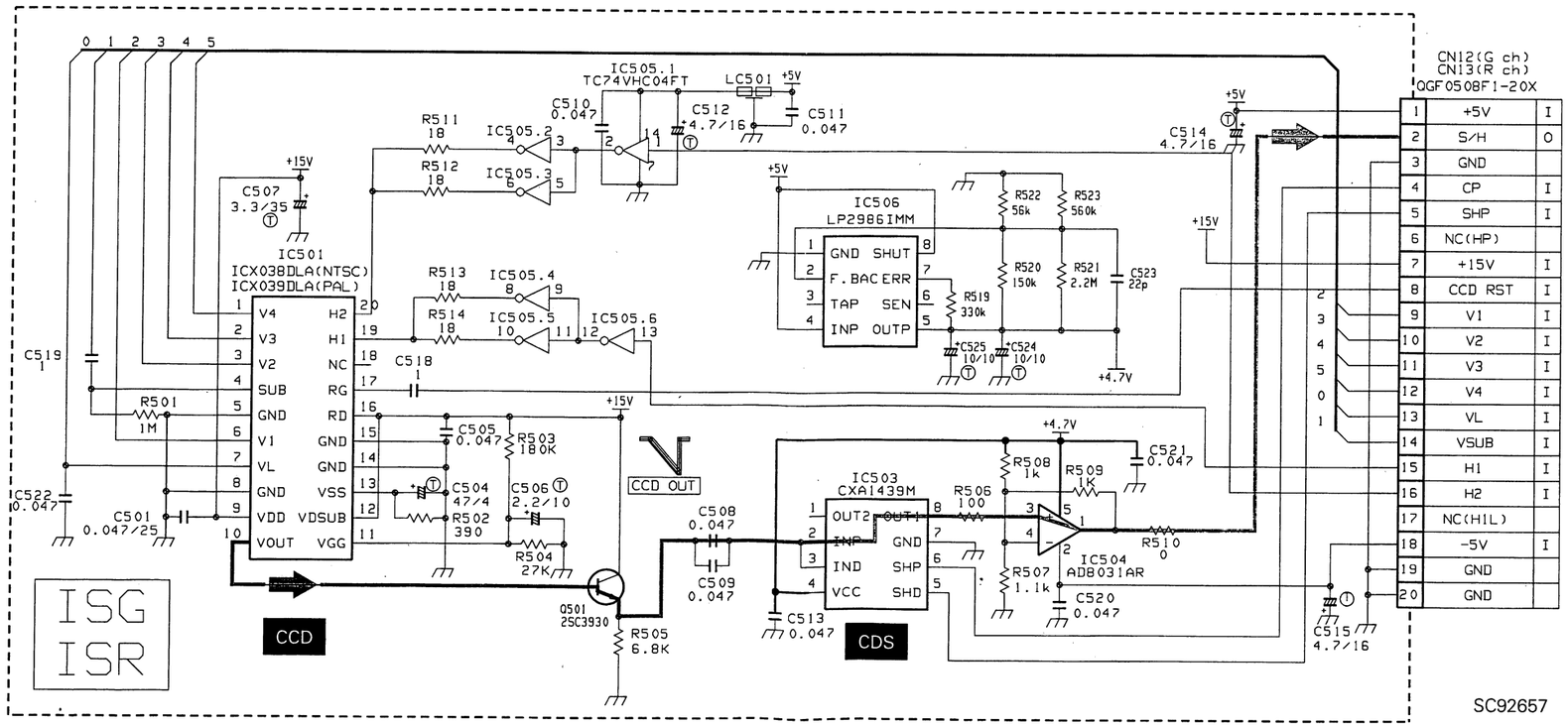

4.4 ISB/ISG/ISR CIRCUIT BOARD

· ISB

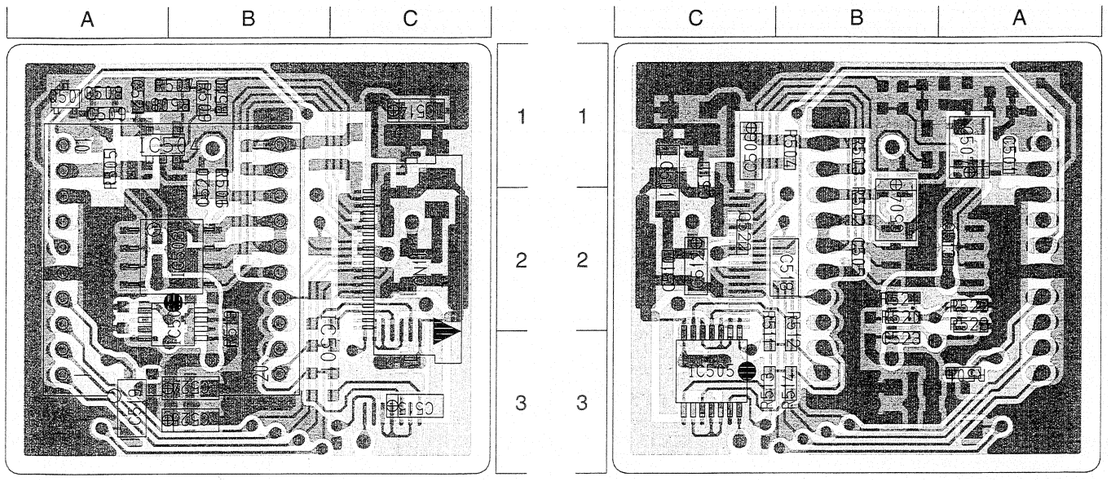

SC82604-02-002

· ISG

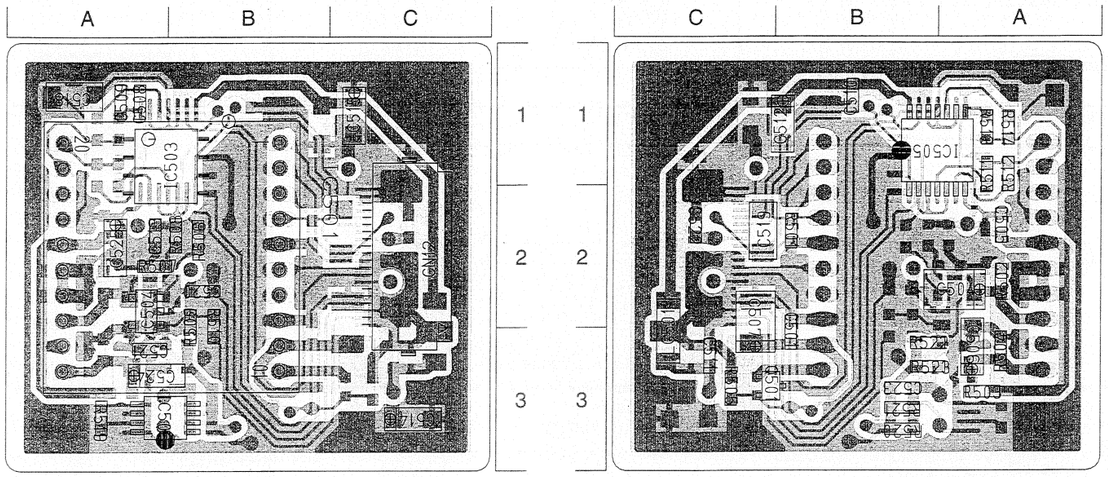

SC82604-03-002

· ISR

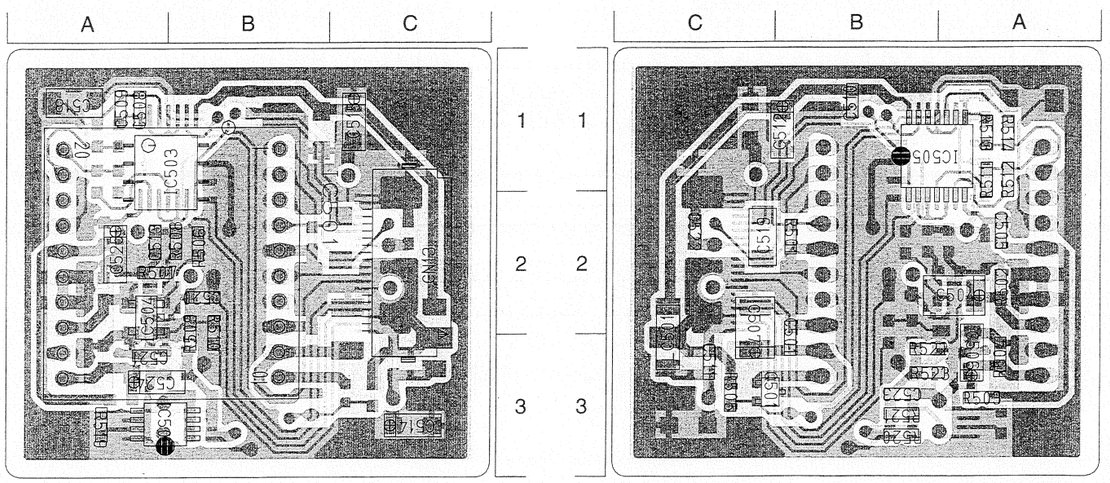

SC82604-04-002

● **ADDRESS TABLE OF BOARD PARTS**
Each address may have an address error by one interval.

Side — A-1C (Y axis, X axis)

IC501	A-2B	R505	A-1A	R521	B-2B	C511	B-1C	C525	A-3B
IC503	A-2B	R506	A-1B	R522	B-2A	C512	B-2C		
IC504	A-1B	R507	A-1B	R523	B-2A	C513	B-2A	CN11	A-2C
IC505	B-2C	R508	A-1B			C514	A-1C		
IC506	A-2B	R509	A-1B	C501	B-1A	C515	A-3C	LC501	B-1C
		R510	A-1B	C504	B-1B	C518	B-2C		
Q501	A-1A	R511	B-2C	C505	B-2B	C519	A-3A		
		R512	B-2C	C506	B-1C	C520	A-1B		
R501	B-3A	R513	B-3C	C507	B-1A	C521	A-1A		
R502	B-1B	R514	B-3C	C508	A-1A	C522	B-2C		
R503	B-1B	R519	A-2B	C509	A-1A	C523	B-2B		
R504	B-1C	R520	B-2B	C510	B-2C	C524	A-3B		

● **ADDRESS TABLE OF BOARD PARTS**
Each address may have an address error by one interval.

Side — A-1C (Y axis, X axis)

IC501	A-2B	R505	B-3C	R521	B-3B	C511	B-2C	C525	A-2A
IC503	A-1B	R506	A-2B	R522	B-2B	C512	B-1C		
IC504	A-2A	R507	A-2A	R523	B-2B	C513	A-2A	CN12	A-2D
IC505	B-1B	R508	A-2B			C514	A-3C		
IC506	A-3B	R509	A-2B	C501	B-2C	C515	A-1C	LC501	B-2C
		R510	A-2B	C504	B-2A	C518	A-1A		
Q501	B-3C	R511	B-1A	C505	B-2A	C519	B-2C		
		R512	B-1A	C506	B-2A	C520	A-2B		
R501	B-2C	R513	B-1A	C507	B-2C	C521	A-2A		
R502	B-2A	R514	B-1A	C508	A-1A	C522	B-2C		
R503	B-3A	R519	A-3A	C509	A-1A	C523	B-3B		
R504	B-2A	R520	B-3B	C510	B-1B	C524	A-3A		

● **ADDRESS TABLE OF BOARD PARTS**
Each address may have an address error by one interval.

Side — A-1C (Y axis, X axis)

IC505	B-1B	R523	B-2B	R507	A-2A	C521	A-2A	C525	A-2A
				R511	B-1A	C522	B-2C	C524	A-3A
IC506	A-3B	R503	B-3A	R506	A-2B			C518	A-1A
IC503	A-1B			R512	B-1A	C523	B-3B	C519	B-2C
		R513	B-1A	R505	B-3C	C520	A-2B		
IC504	A-2A			R504	B-2A	C508	A-1A	C501	B-2C
		R502	B-2A					C505	B-2A
IC501	A-2B	R510	A-2B	R519	A-3A	C504	B-2A		
		R501	B-2C	R520	B-3B	C507	B-2C	C513	A-2A
Q501	B-3C	R514	B-1A			C514	A-3C		
		R509	A-2B	C509	A-1A	C512	B-1C	LC501	B-2C
R521	B-3B			C510	B-1B	C506	B-2A		
R522	B-2B	R508	A-2B	C511	B-2C	C515	A-1C	CN13	A-2D

4.5 TG(Timing Generator) SCHEMATIC DIAGRAM 1 4

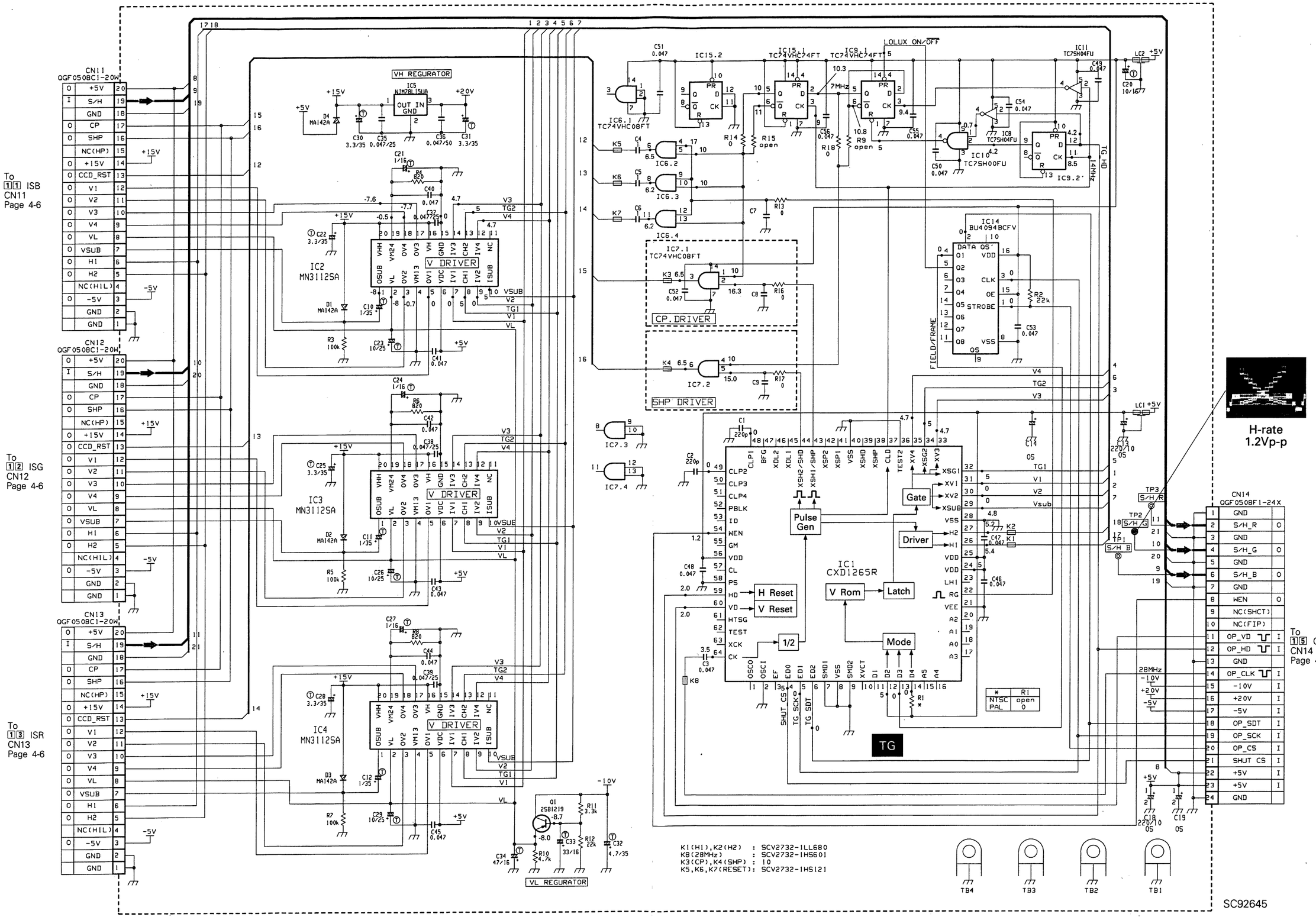

4.6 TG CIRCUIT BOARD

— SIDE A —

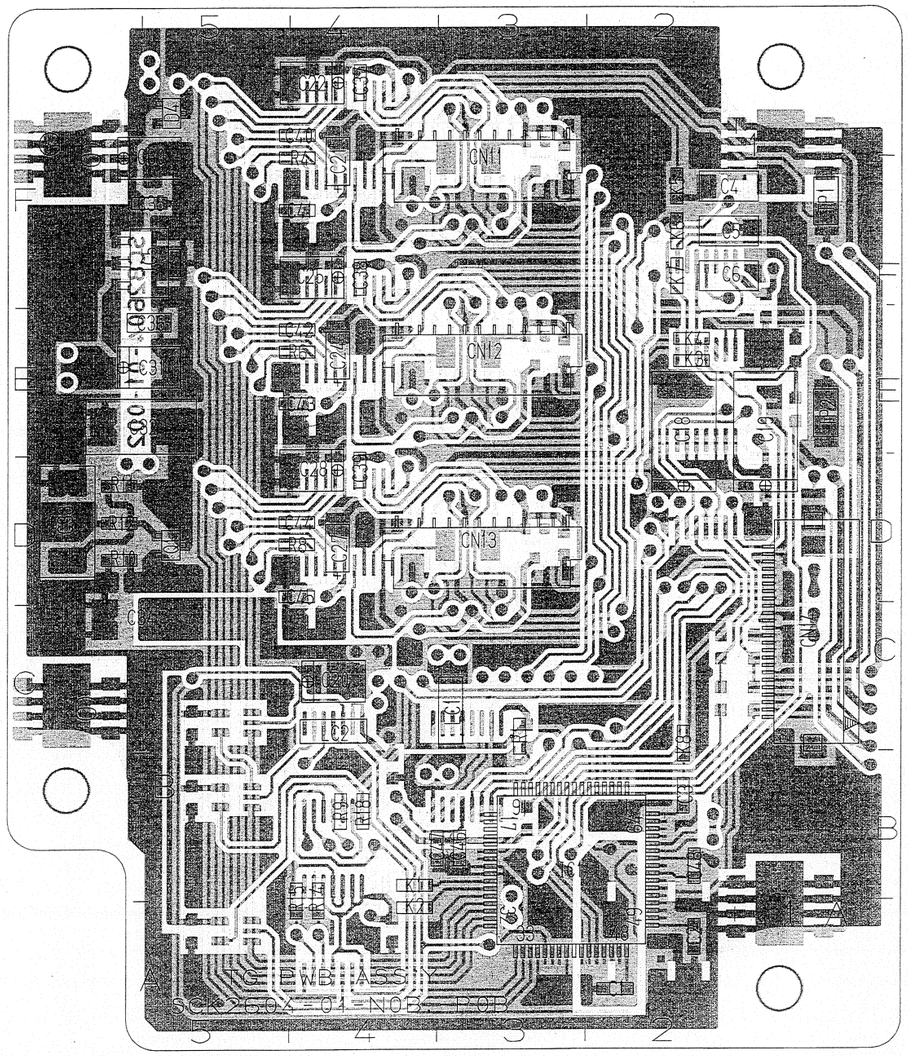

— SIDE B —

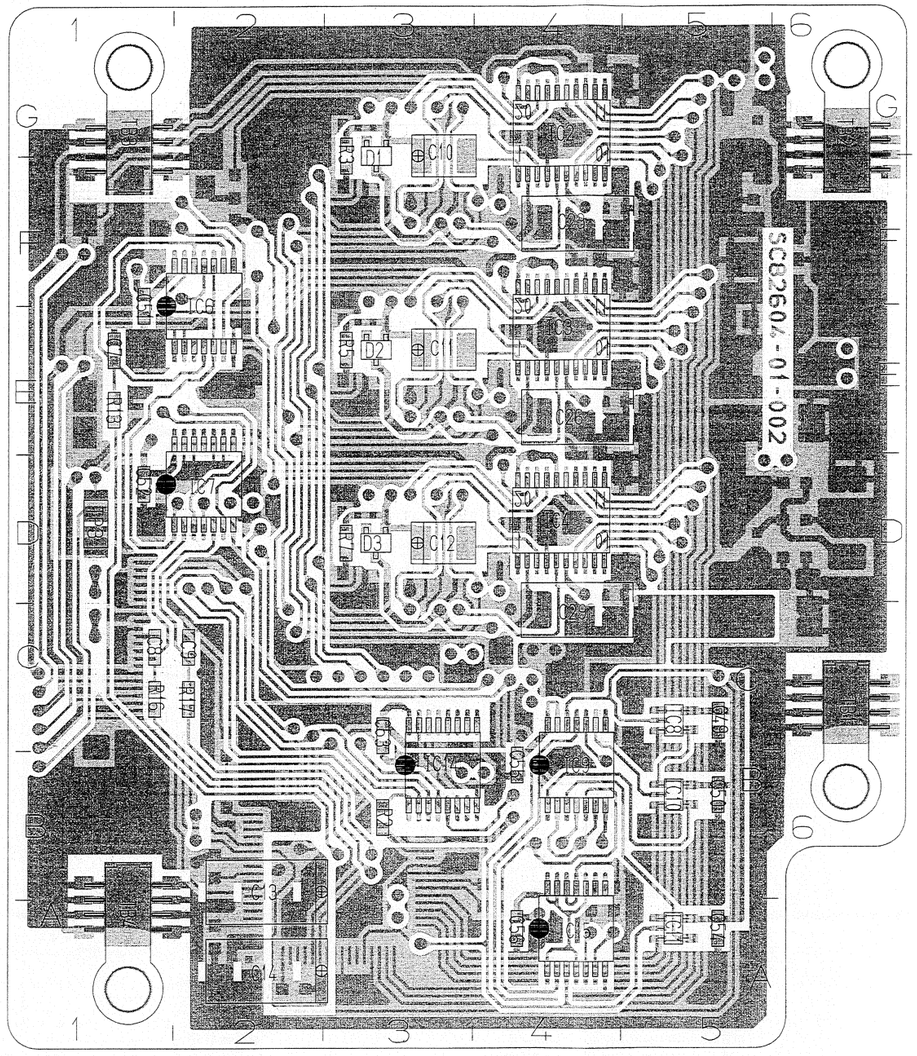

● **ADDRESS TABLE OF BOARD PARTS**

Each address may have an address error by one interval.

Side — A-1C (Y axis / X axis)

IC1	A-3B	R3	B-3G	C7	B-1E	C33	A-6D	C56	B-4A	TB1	B-6B
IC2	B-4G	R4	A-5G	C8	B-2C	C34	A-6C			TB2	B-6G
IC3	B-4E	R5	B-3E	C9	B-2C	C35	A-6F	TP1	A-1F	TB3	B-1G
IC4	B-4D	R6	A-5E	C10	B-3G	C36	A-6E	TP2	A-1E	TB4	B-1A
IC5	A-6F	R7	B-3D	C11	B-3E	C37	A-4G	TP3	B-1D		
IC6	B-2F	R8	A-5D	C12	B-3D	C38	A-4F				
IC7	B-2D	R9	A-4B	C13	B-2B	C39	A-4D	CN11	A-3G		
IC8	B-5C	R10	A-6D	C14	B-2A	C40	A-5G	CN12	A-3E		
IC9	B-4B	R11	A-6D	C18	A-2E	C41	A-5F	CN13	A-3D		
IC10	B-5B	R12	A-6D	C19	A-1E	C42	A-5E	CN14	A-1C		
IC11	B-5A	R13	B-1E	C20	A-4C	C43	A-5E				
IC14	B-3B	R14	A-4B	C21	A-4F	C44	A-5D	K1	A-4B		
IC15	B-4A	R15	A-5B	C22	A-5G	C45	A-5D	K2	A-4A		
		R16	B-2C	C23	B-4F	C46	A-4B	K3	A-2E		
Q1	A-5D	R17	B-2C	C24	A-4E	C47	A-4B	K4	A-2E		
		R18	A-4B	C25	A-5F	C48	A-2B	K5	A-2F		
D1	B-3G			C26	B-4E	C49	B-5C	K6	A-2F		
D2	B-3E	C1	A-2A	C27	A-4D	C50	B-5B	K7	A-2F		
D3	B-3D	C2	A-2A	C28	A-5D	C51	B-1F	K8	A-2C		
D4	A-5G	C3	A-2B	C29	B-4C	C52	B-1D				
		C4	A-2F	C30	A-6G	C53	B-3C	LC1	A-4C		
R1	A-3C	C5	A-2F	C31	A-6E	C54	B-5A	LC2	A-4C		
R2	B-3B	C6	A-2F	C32	A-6E	C55	B-4B				

4.7 CAM1(CAMera 1) SCHEMATIC DIAGRAM (1/2) 1 5

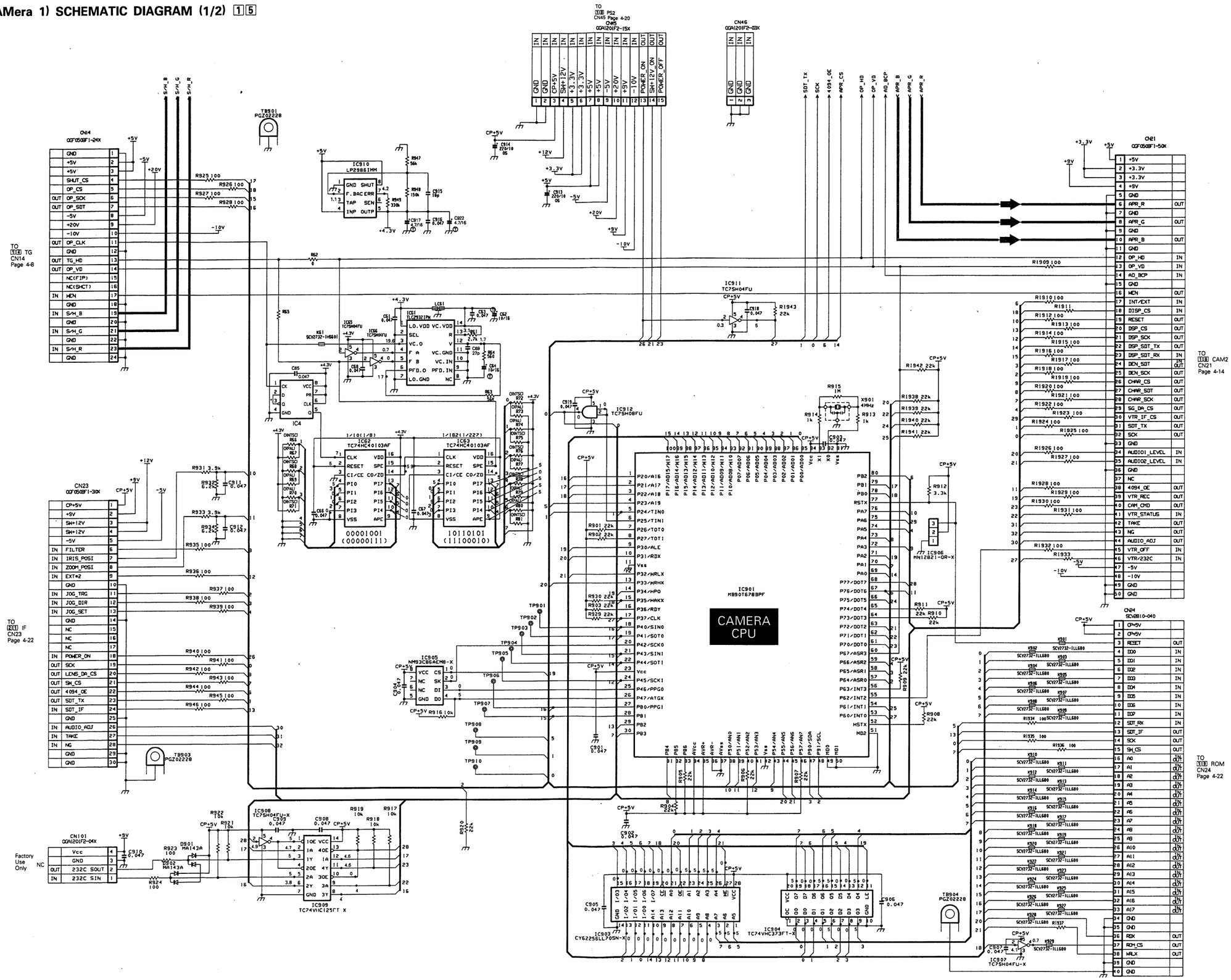

• CAM1 SCHEMATIC DIAGRAM (2/2) 1 5

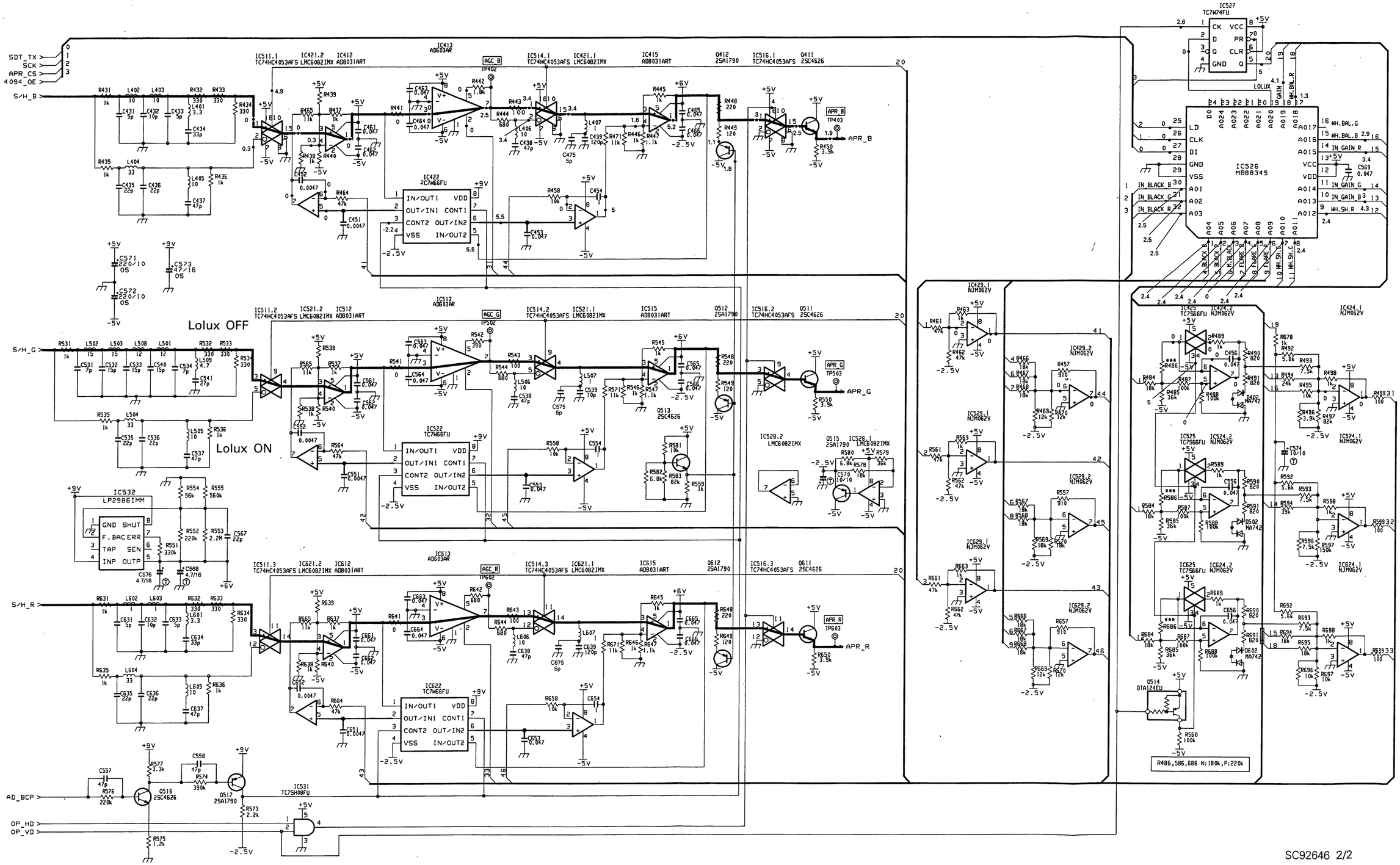

SC92646 2/2

4.8 CAM1 CIRCUIT BOARD

– SIDE A –

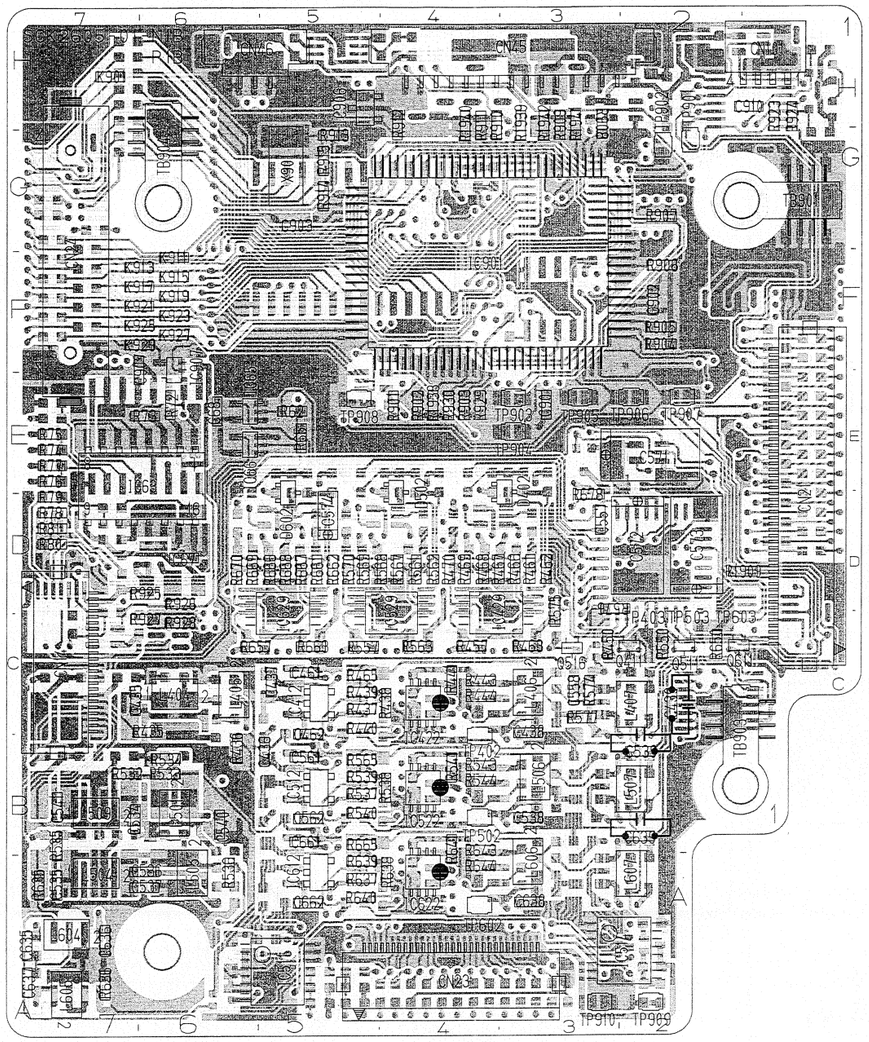

– SIDE B –

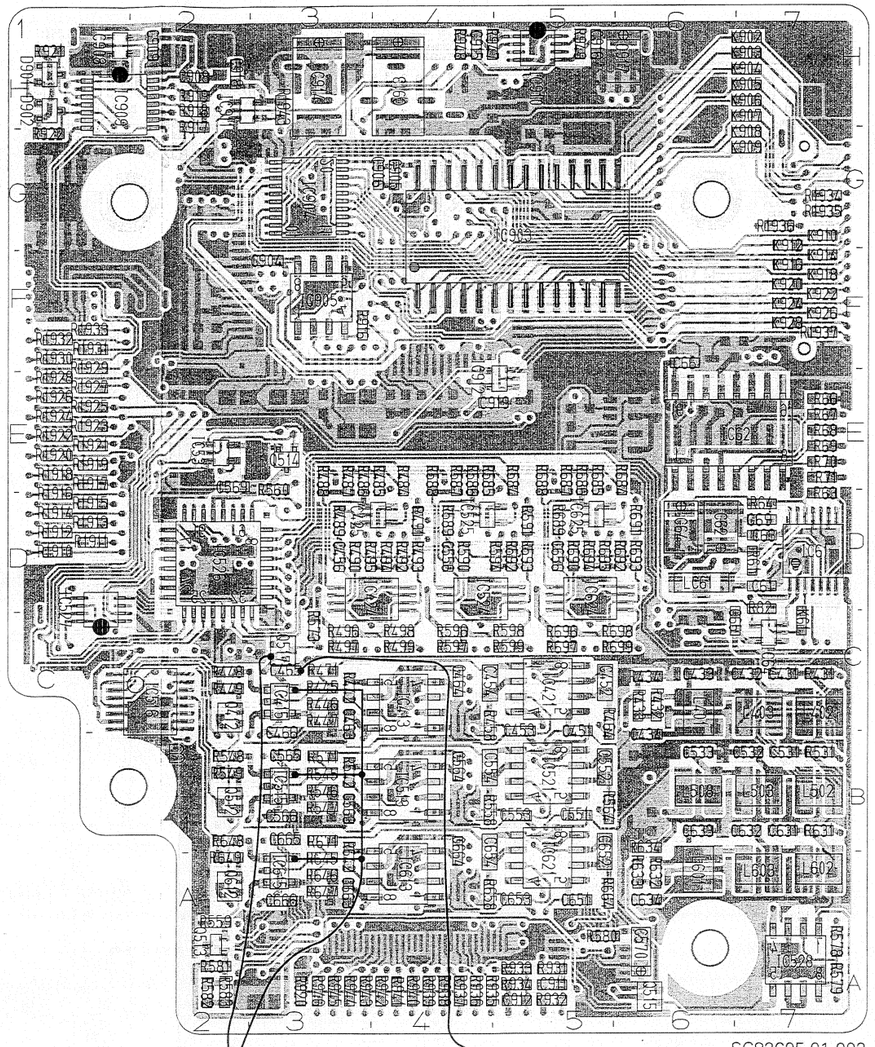

SC82605-01-002

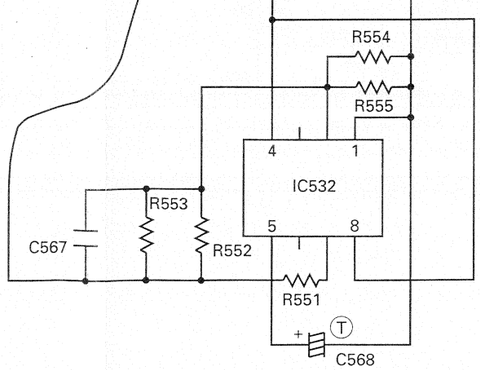

● **ADDRESS TABLE OF BOARD PARTS**

Each address may have an address error by one interval.

Side — A-1C — Y axis / X axis

IC61	B-7D	R61	B-7D	R496	B-3D	R634	B-6B
IC62	B-6E	R62	A-5E	R497	B-3C	R635	A-7B
IC63	A-6E	R63	B-7E	R498	B-4D	R636	A-7A
IC64	B-7D	R64	B-7E	R499	B-4C	R637	A-5B
IC65	A-6E	R65	A-5E	R531	B-7C	R638	A-4B
IC66	A-6E	R66	B-7E	R532	A-7B	R639	A-5B
IC412	A-5C	R67	B-7E	R533	A-6B	R640	A-5B
IC413	B-4C	R68	B-7E	R534	A-6C	R641	A-4B
IC415	B-3C	R69	B-7E	R535	A-7B	R642	B-3B
IC421	B-5C	R70	B-7E	R536	A-6B	R643	A-4B
IC422	A-4C	R71	B-7E	R537	A-5B	R644	A-4B
IC424	B-3D	R72	A-6E	R538	A-4B	R645	B-3B
IC425	B-4E	R73	A-6E	R539	A-5B	R646	B-3B
IC429	A-4D	R74	A-7E	R540	A-5B	R647	B-3B
IC511	A-5A	R75	A-7E	R541	A-4C	R648	B-2B
IC512	A-5B	R76	A-7E	R542	B-3B	R649	B-2B
IC513	B-4B	R77	A-7E	R543	A-4C	R650	A-2D
IC514	A-2A	R78	A-7E	R544	A-4B	R657	A-6D
IC515	B-3B	R79	A-7E	R545	B-3B	R658	B-4B
IC516	B-2C	R80	A-7D	R546	B-3B	R661	A-5D
IC521	B-5C	R81	A-7D	R547	B-3B	R662	A-5D
IC522	A-4B	R82	B-7D	R548	B-2C	R663	A-5D
IC524	B-4D	R431	B-7C	R549	B-2B	R664	B-5B
IC525	B-4E	R432	B-6C	R550	A-2D	R665	A-5B
IC526	B-2D	R433	B-6C	R557	A-5D	R666	A-5D
IC527	B-1D	R434	B-6C	R558	B-4B	R667	A-5D
IC528	B-7A	R435	A-6C	R559	B-2A	R668	A-5D
IC529	A-4D	R436	A-6C	R560	B-3E	R669	A-6D
IC531	B-2E	R437	A-5C	R561	A-4D	R670	A-6D
IC612	A-5B	R438	A-4C	R562	A-4D	R671	B-3B
IC613	B-4B	R439	A-5C	R563	A-4D	R678	A-3E
IC615	B-3B	R440	A-5C	R564	B-5B	R684	B-6E
IC621	B-5B	R441	A-4C	R565	A-5C	R685	B-5E
IC622	A-4B	R442	B-3C	R567	A-4D	R686	B-5E
IC624	B-5D	R443	A-4C	R568	A-4D	R687	B-5E
IC625	B-5E	R444	A-4C	R569	A-5D	R688	B-5E
IC629	A-5D	R445	B-3C	R570	A-5D	R689	B-5D
IC901	A-4G	R446	B-3C	R571	B-3C	R690	B-5D
IC903	B-5G	R447	B-3C	R573	B-3D	R691	B-6D
IC904	B-3G	R448	B-2C	R574	A-3C	R692	B-6D
IC905	B-3F	R449	B-2C	R575	A-3D	R693	B-6D
IC906	A-5H	R450	A-3D	R576	A-3D	R694	B-5D
IC907	A-6F	R457	A-4D	R577	A-3C	R695	B-5D
IC908	B-1H	R458	B-4C	R578	B-7A	R696	B-5D
IC909	B-1H	R461	A-3D	R579	B-7A	R697	B-5C
IC910	B-5H	R462	A-3D	R580	B-5A	R698	B-6D
IC911	B-2H	R463	A-3D	R581	B-2A	R699	B-6C
IC912	B-5F	R464	B-5C	R582	B-2A	R901	A-4E
		R465	A-5C	R583	B-2A	R902	A-4E
Q411	A-2D	R466	A-3D	R584	B-5E	R903	A-4E
Q412	B-2C	R467	A-3D	R585	B-4E	R904	A-2F
Q511	A-2D	R468	A-4D	R586	B-4E	R905	A-2F
Q512	B-2B	R469	A-4D	R587	B-4E	R906	A-2F
Q513	B-2A	R470	A-4D	R588	B-4E	R907	A-2G
Q514	B-3E	R471	B-3C	R589	B-4D	R908	A-3H
Q515	B-6A	R484	B-4E	R590	B-4D	R909	A-3H
Q516	A-3D	R485	B-4E	R591	B-5D	R910	A-4H
Q517	B-3C	R486	B-3E	R592	B-5D	R911	A-4H
Q611	A-2D	R487	B-3E	R593	B-5D	R912	A-4H
Q612	B-2B	R488	B-3E	R594	B-5D	R913	A-5G
		R489	B-3D	R596	B-4D	R914	A-5G
D402	A-3E	R490	B-3D	R597	B-4C	R915	A-5G
D502	A-4E	R491	B-4D	R598	B-5D	R916	B-3F
D602	A-5E	R492	B-4D	R599	B-5C	R917	B-2H
D901	B-1H	R493	B-4D	R631	B-7B	R918	B-2H
D902	B-1H	R494	B-4D	R632	B-6B	R919	B-2H
		R495	B-3D	R633	B-6B	R920	B-3A

4-12

R921	B-1H	C63	B-7D	C652	B-5B	TP908	A-5E
R922	B-1G	C64	B-6D	C653	B-5B	TP909	A-2A
R923	A-1H	C65	B-6D	C654	B-4B	TP910	A-3A
R924	A-1H	C66	B-6F	C656	B-5D		
R925	A-6D	C67	A-6D	C661	A-5B	TB901	A-1G
R926	A-6D	C68	A-6E	C662	A-5A	TB903	A-1B
R927	A-6D	C69	B-7D	C663	B-3B	TB904	A-6G
R928	A-6D	C431	B-7C	C664	B-4B		
R929	A-4E	C432	B-7C	C665	B-3B	CN14	A-7C
R930	A-4E	C433	B-6C	C666	B-3A	CN21	A-1E
R931	B-5A	C434	B-6C	C901	A-3E	CN23	A-4A
R932	B-5A	C435	A-7C	C902	A-2F	CN24	A-7G
R933	B-5A	C436	A-5C	C903	A-5G	CN45	A-3H
R934	B-5A	C437	A-5C	C904	B-3G	CN46	A-6H
R935	B-4A	C438	A-3C	C905	B-4G	CN101	A-1H
R936	B-4A	C439	A-2C	C906	B-4G		
R937	B-4A	C451	B-5C	C907	A-6F	K61	B-7D
R938	B-4A	C452	B-5C	C908	B-2H	K901	A-7H
R939	B-4A	C453	B-5C	C909	B-2H	K902	B-7H
R940	B-4A	C454	B-4C	C910	A-1H	K903	B-7H
R941	B-4A	C456	B-3D	C911	B-5A	K904	B-7H
R942	B-4A	C461	A-5C	C912	B-5A	K905	B-7H
R943	B-3A	C462	A-5C	C913	B-4H	K906	B-7H
R944	B-3A	C463	B-3C	C914	B-3H	K907	B-7H
R945	B-3A	C464	B-4C	C915	B-4H	K908	B-7G
R946	B-3A	C465	B-3C	C916	B-5H	K909	B-7G
R947	B-4H	C466	B-3C	C917	B-6H	K910	B-7G
R948	B-4H	C531	B-7C	C918	B-2H	K911	A-6G
R949	B-5H	C532	B-7C	C919	B-4E	K912	B-7G
R1909	A-1D	C533	B-6C			K913	A-6F
R1910	B-1D	C534	A-7B	L401	B-6C	K914	B-7G
R1911	B-1D	C535	A-7B	L402	B-7C	K915	A-6F
R1912	B-1D	C536	A-6B	L403	B-7C	K916	B-7F
R1913	B-1D	C537	A-6B	L404	A-6C	K917	A-6F
R1914	B-1E	C538	A-3B	L405	A-6C	K918	B-7F
R1915	B-1E	C539	A-2C	L406	A-3C	K919	A-6F
R1916	B-1E	C540	A-6B	L407	A-2C	K920	B-7F
R1917	B-1E	C541	A-7B	L501	A-6B	K921	A-6F
R1918	B-1E	C551	B-5B	L502	B-7B	K922	B-7F
R1919	B-1E	C552	B-5C	L503	B-7B	K923	A-6F
R1920	B-1E	C553	B-5B	L504	A-7B	K924	B-7F
R1921	B-1E	C554	B-4C	L505	A-6B	K925	A-6F
R1922	B-1E	C556	B-4D	L506	A-3B	K926	B-7F
R1923	B-1E	C557	A-3D	L507	A-2B	K927	A-6F
R1924	B-1E	C558	A-3C	L508	B-6B	K928	B-7F
R1925	B-1E	C561	A-5C	L509	A-7B	K929	A-6F
R1926	B-1E	C562	A-5B	L601	B-6B		
R1927	B-1E	C563	B-3B	L602	B-7B	X901	A-5G
R1928	B-1F	C564	B-4C	L603	B-7B		
R1929	B-1F	C565	B-3C	L604	A-7A	LC61	B-6D
R1930	B-1F	C566	B-3B	L605	A-7A		
R1931	B-1F	C569	B-2E	L606	A-3B		
R1932	B-1F	C570	B-6A	L607	A-2B		
R1933	B-1F	C571	A-2E				
R1934	B-7G	C572	A-2D	TP402	A-4C		
R1935	B-7G	C573	A-2D	TP403	A-2D		
R1936	B-7G	C574	A-5E	TP502	A-4B		
R1937	B-7F	C631	B-7B	TP503	A-2D		
R1938	A-4E	C632	B-7B	TP602	A-4A		
R1939	A-3H	C633	B-6B	TP603	A-2D		
R1940	A-4H	C634	B-6B	TP901	A-2G		
R1941	A-3H	C635	A-7A	TP902	A-2G		
R1942	A-3H	C636	A-7A	TP903	A-3E		
R1943	B-3H	C637	A-7A	TP904	A-3E		
		C638	A-3B	TP905	A-3E		
C61	B-7D	C639	A-2B	TP906	A-2E		
C62	B-6D	C651	B-5B	TP907	A-2E		

— INNER PATTERN (SIDE A) —

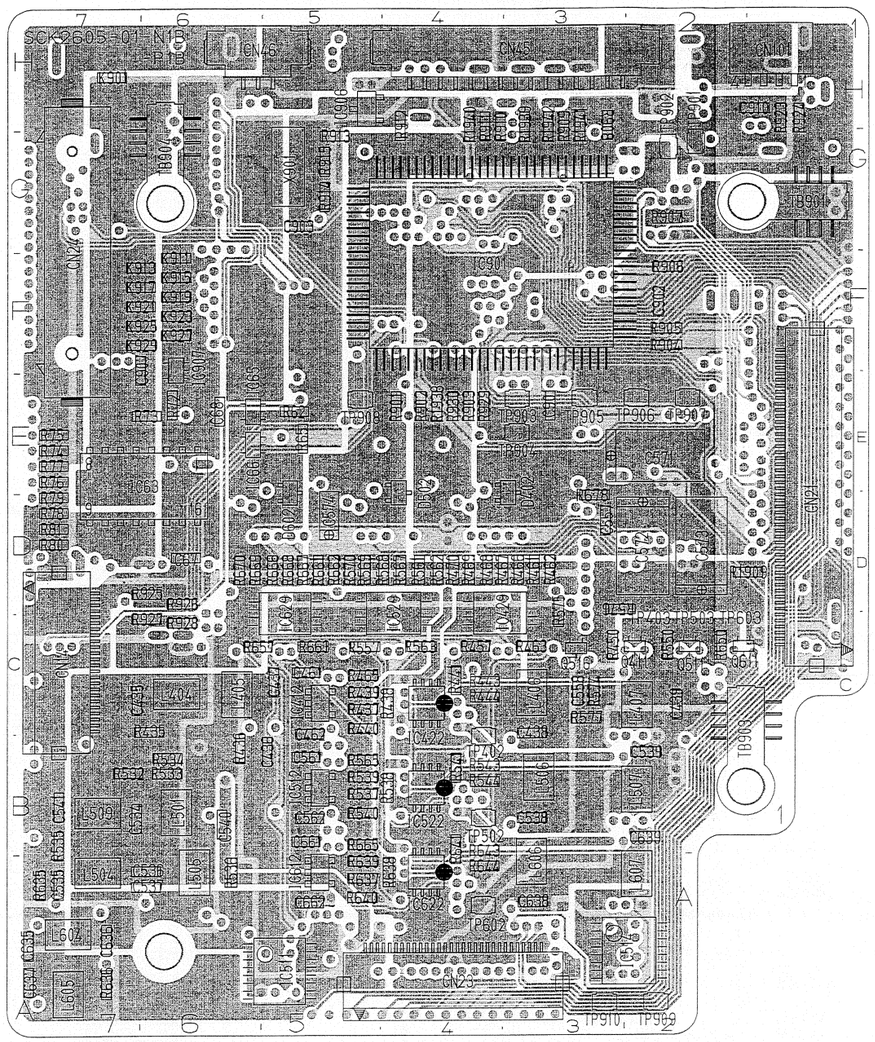

— INNER PATTERN (SIDE B) —

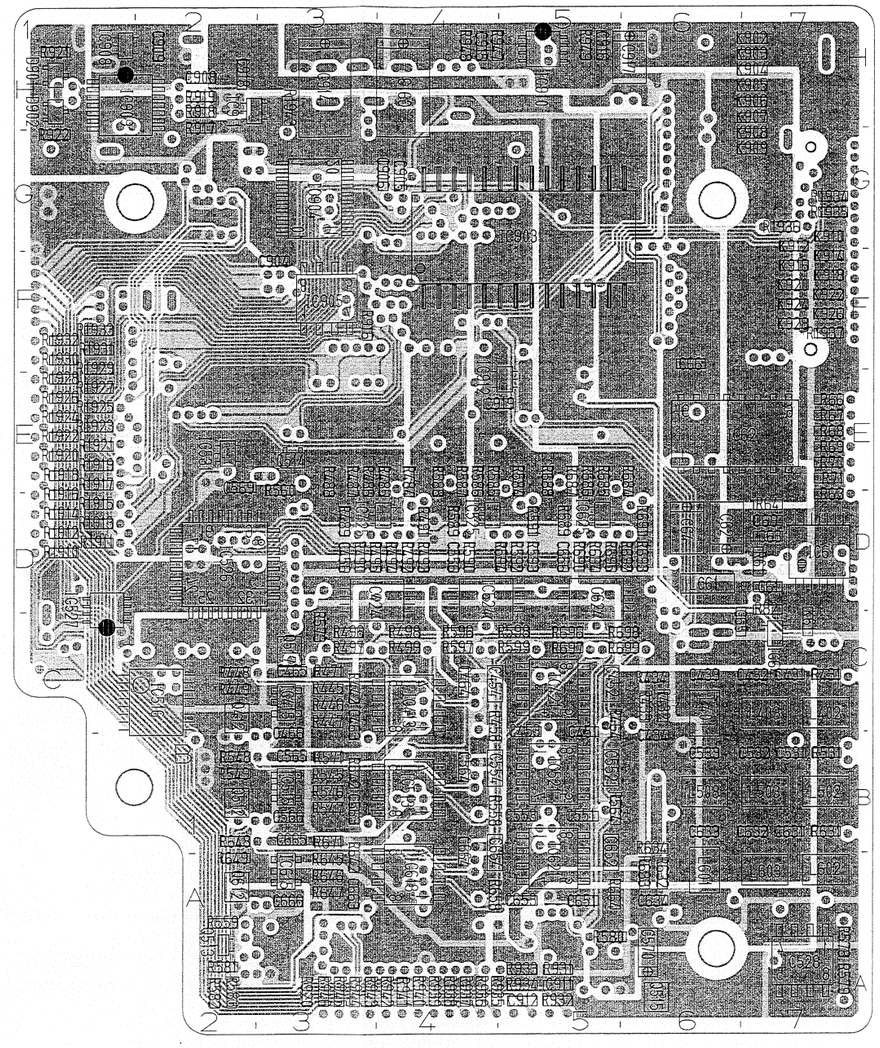

4.9 CAM2(CAMera 2) SCHEMATIC DIAGRAM (1/3) 1 6

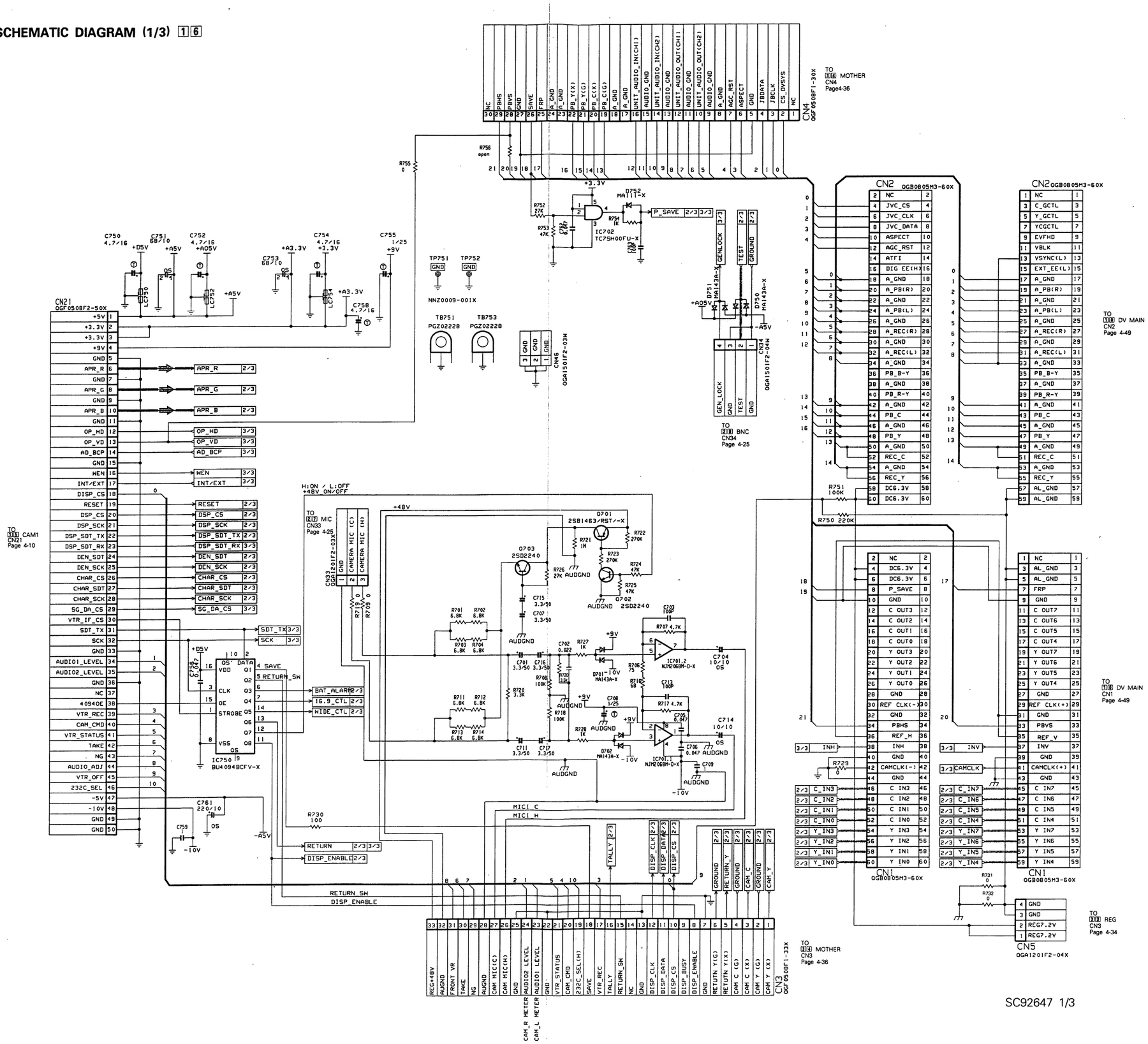

· CAM2 SCHEMATIC DIAGRAM (2/3) 1 6

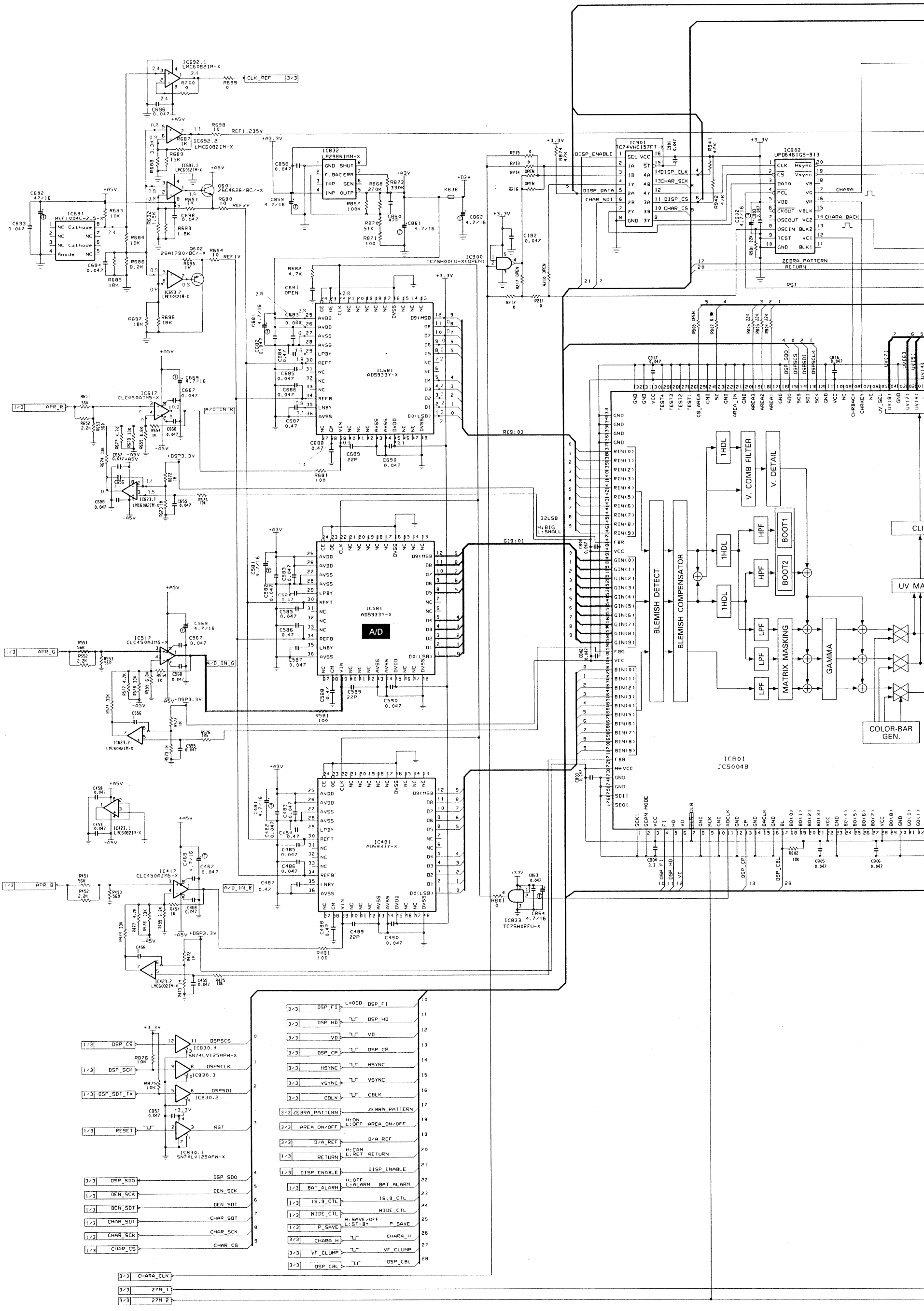

ENCODER&D/A

LATCH

ASS'Y	*1	*2	*3	*4	
	R850	R851	R852	R842	R846
N0A	18K	7.5K	10K	18K	18K
P0A	33K	6.8K	12K	10K	10K

SC92647 2/3

· **CAM2 SCHEMATIC DIAGRAM (3/3)** 16

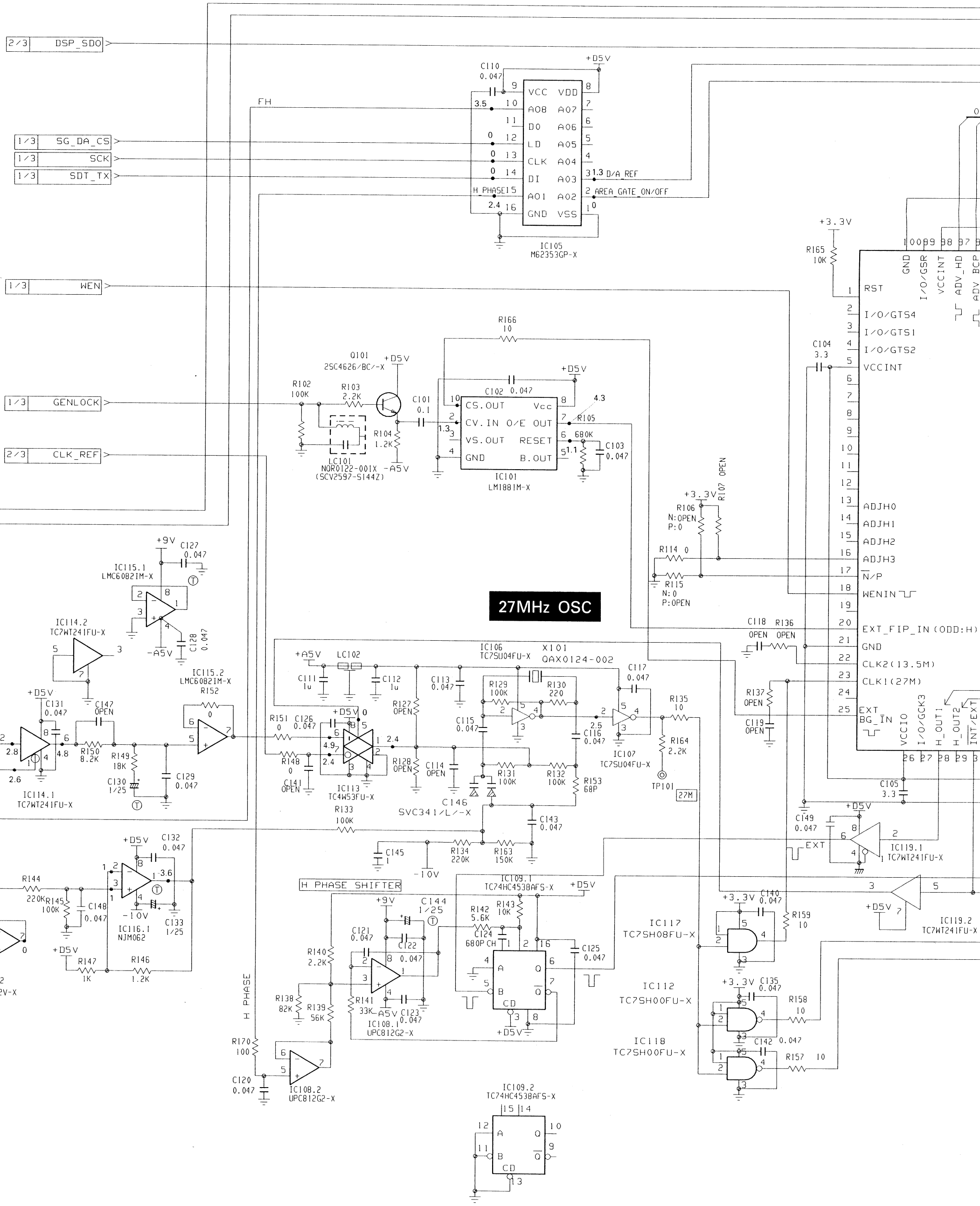

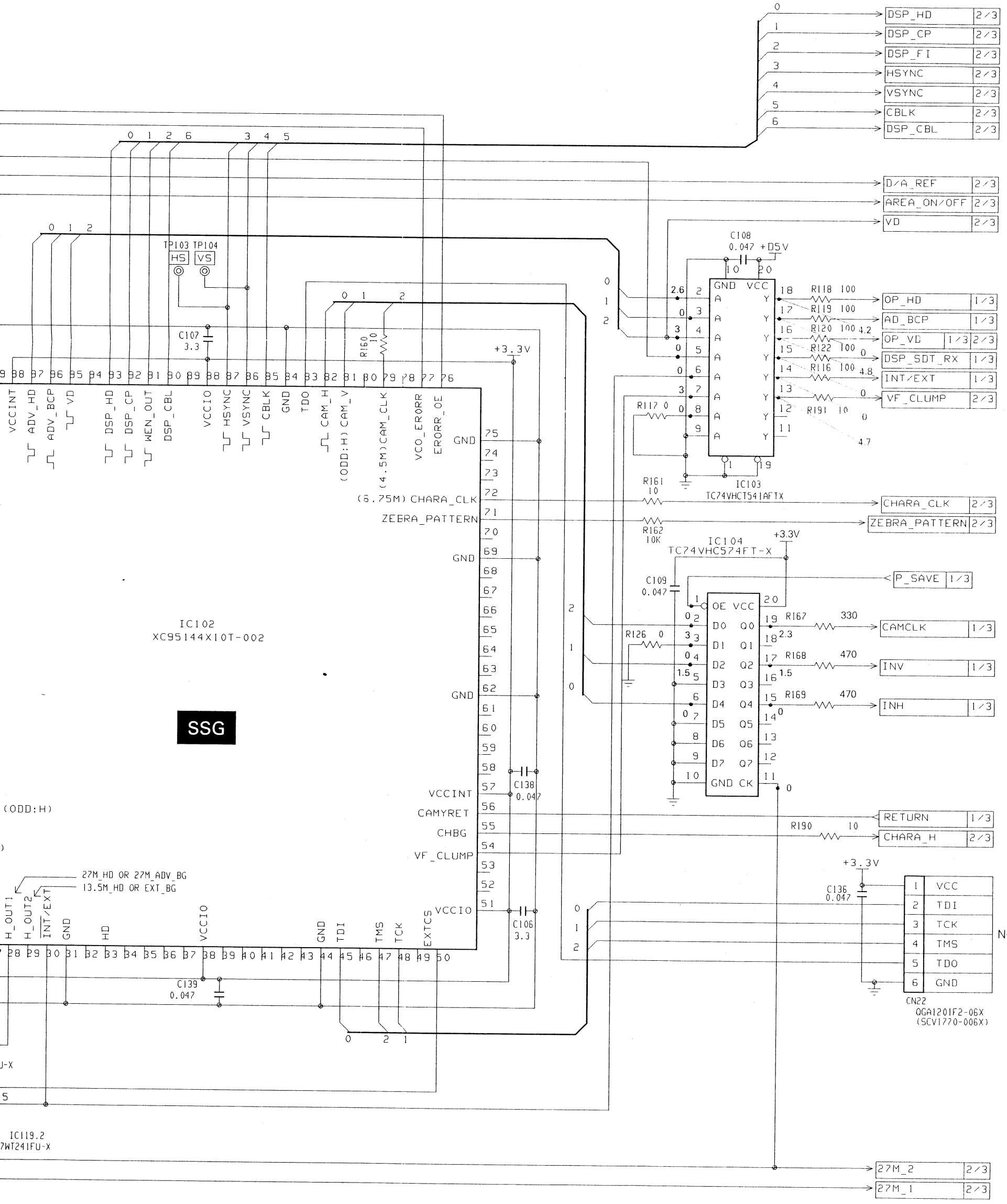
IC102
XC95144X10T-002
SSG
IC103
TC74VHCT541AFTX
IC104
TC74VHC574FT-X
CN22
QGA1201F2-06X
(SCV1770-006X)
Factory Use Only
DSP_HD 2/3
DSP_CP 2/3
DSP_FI 2/3
HSYNC 2/3
VSYNC 2/3
CBLK 2/3
DSP_CBL 2/3
D/A_REF 2/3
AREA_ON/OFF 2/3
VD 2/3
OP_HD 1/3
AD_BCP 1/3
OP_VD 1/3 2/3
DSP_SDT_RX 1/3
INT/EXT 1/3
VF_CLUMP 2/3
CHARA_CLK 2/3
ZEBRA_PATTERN 2/3
P_SAVE 1/3
CAMCLK 1/3
INV 1/3
INH 1/3
RETURN 1/3
CHARA_H 2/3
27M_2 2/3
27M_1 2/3
TP103 HS
TP104 VS
C107 3.3
C108 0.047
C109 0.047
C136 0.047
C138 0.047
C139 0.047
C106 3.3
R160 10
R161 10
R162 10K
R190 10
R117 0
R126 0
R118 100
R119 100
R120 100
R122 100
R116 100
R191 10
R167 330
R168 470
R169 470
+3.3V
+D5V
VCCINT
ADV_HD
ADV_BCP
VD
DSP_HD
DSP_CP
WEN_OUT
DSP_CBL
VCCIO
HSYNC
VSYNC
CBLK
GND
TDO
CAM_H
CAM_V
(4.5M) CAM_CLK
VCO_ERORR
ERORR_OE
(6.75M) CHARA_CLK
ZEBRA_PATTERN
VCCINT
CAMYRET
CHBG
VF_CLUMP
VCCIO
(ODD:H)
27M_HD OR 27M_ADV_BG
13.5M_HD OR EXT_BG
H_OUT1
H_OUT2
INT/EXT
HD
TDI
TMS
TCK
EXTCS
IC119.2
7WT241FU-X

SC92647 3/3

4.10 CAM2 CIRCUIT BOARD

— SIDE A —

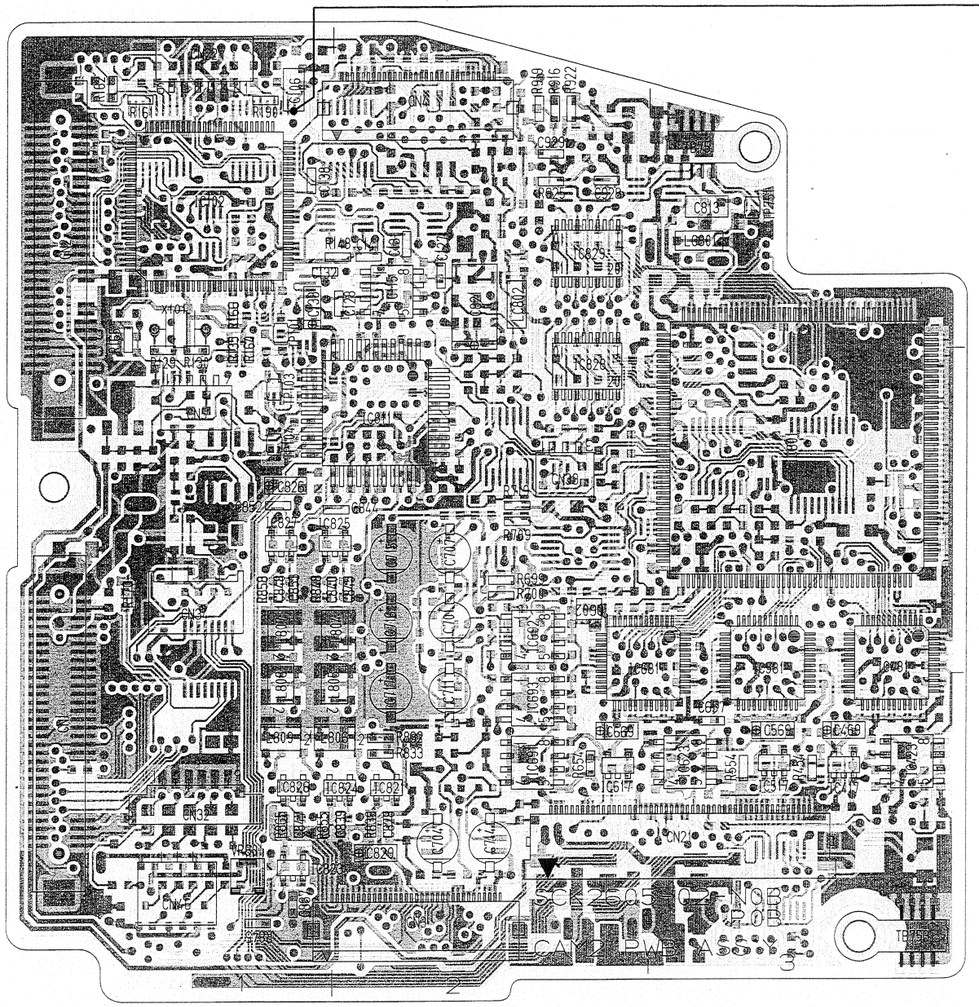

— SIDE B —

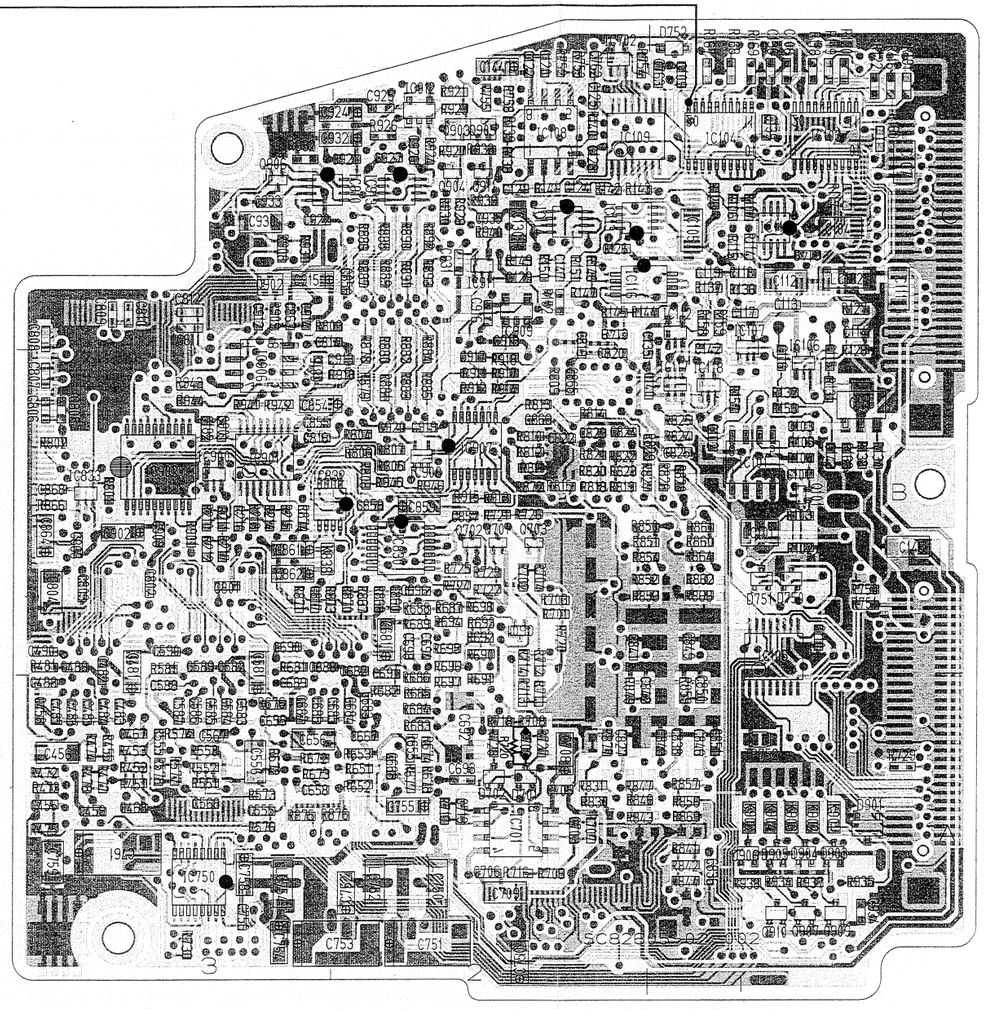

● **ADDRESS TABLE OF BOARD PARTS**

Each address may have an address error by one interval.

Side — A-1C — Y axis / X axis

IC101	B-1B	IC681	A-2B	IC907	B-2B	D701	B-2A	R122	B-1C	R149	B-2C	R213	B-3B	R574	B-3A	R689	B-2B	R716	B-2A	R803	B-2C	R829	B-1B	R859	B-1A	R883	B-2B	R921	B-2C	VR801	A-1A	C123	B-2C
IC102	A-1C	IC691	A-2A	IC908	B-2B	D702	B-2A	R126	B-1C	R150	B-2C	R214	B-3B	R576	B-3A	R690	B-2B	R717	B-2A	R804	B-2B	R830	B-2A	R860	B-1B	R884	B-2B	R922	A-2C			C124	B-2C
IC103	B-1C	IC692	A-2B	IC909	B-2C	D750	B-1B	R127	B-1C	R151	B-2C	R215	B-3B	R577	B-3A	R691	B-2A	R718	B-2A	R805	B-2B	R831	B-2A	R861	B-1B	R885	B-2B	R923	B-2C	C101	B-1B	C125	B-2C
IC104	B-1C	IC693	A-2A	IC910	B-2C	D751	B-1B	R128	B-1B	R152	B-2C	R216	B-3B	R578	B-3A	R692	B-2B	R719	A-2B	R806	B-2B	R832	A-2A	R862	B-1B	R886	B-2C	R924	B-2C	C102	B-1B	C126	B-2C
IC105	B-1B	IC701	B-2A	IC911	B-2C	D752	B-1C	R129	A-1C	R153	B-1B	R217	B-3B	R581	B-3B	R693	B-2B	R720	B-2B	R807	B-2B	R833	A-2A	R863	B-1B	R887	B-2C	R925	A-2C	C103	B-1B	C127	A-2C
IC106	B-1B	IC702	B-2C	IC912	B-2C	D901	B-1A	R130	A-1C	R157	B-1B	R451	B-3A	R651	B-2A	R694	B-2B	R721	B-2B	R808	B-2B	R839	A-2A	R864	B-1B	R888	B-2C	R926	B-2C	C104	B-1C	C128	A-1C
IC107	B-1C	IC750	B-3A	IC913	B-2C	D903	B-1A	R131	B-1B	R158	B-1C	R452	B-3A	R652	B-2A	R695	B-2B	R722	B-2B	R809	B-2B	R841	B-1A	R865	A-1A	R889	B-2C	R927	B-2C	C105	B-1C	C129	B-2C
IC108	B-2C	IC801	A-3B			D904	B-1A	R132	B-1B	R159	B-1C	R453	B-3A	R653	B-2A	R696	B-2B	R723	B-2B	R810	B-2B	R842	B-1A	R866	B-3B	R890	B-2C	R929	B-2C	C106	A-1C	C130	B-2C
IC109	B-2C	IC811	A-2B	Q101	B-1B	D905	B-1A	R133	B-1B	R160	B-1C	R454	A-3A	R654	A-2A	R697	B-2A	R724	B-2B	R811	B-2B	R843	B-1A	R867	B-2B	R891	B-2C	R930	B-2C	C107	B-1C	C131	A-2C
IC112	B-1C	IC821	A-2A	Q601	B-2B	D906	B-1A	R134	B-1B	R161	A-1C	R455	B-3A	R655	B-2A	R698	B-2B	R725	B-2B	R812	B-2B	R844	B-1A	R868	B-2B	R892	B-2C	R931	B-3C	C108	B-1C	C132	A-1C
IC113	B-2C	IC823	A-1A	Q602	A-2B			R135	A-1C	R162	A-1C	R472	B-3A	R672	B-3A	R699	A-2B	R726	B-2B	R813	B-2B	R845	A-1A	R869	B-1A	R893	B-2C	R932	B-3C	C109	B-1C	C133	A-1C
IC114	B-2C	IC824	A-1A	Q701	B-2B	R102	B-1B	R136	B-1C	R163	B-1B	R473	B-3A	R673	B-3A	R700	A-2B	R727	B-2A	R814	B-2B	R846	B-1A	R870	B-2B	R901	B-3B	R933	B-2C	C110	B-1B	C135	B-1C
IC115	A-2C	IC825	A-1B	Q702	B-2B	R103	B-1B	R137	B-1C	R164	A-1C	R474	B-3A	R674	B-2A	R701	B-2B	R728	B-2A	R815	B-2B	R847	B-1A	R871	B-3B	R908	B-3C	R934	B-1A	C111	B-1C	C136	B-1C
IC116	B-1C	IC826	A-1A	Q703	B-2B	R104	B-1B	R138	B-2C	R165	A-1C	R475	B-3A	R676	B-3A	R702	B-2B	R729	B-1A	R818	B-2B	R848	A-1B	R872	B-2B	R909	B-3C	R935	B-1A	C112	B-1C	C138	A-1C
IC117	B-1B	IC827	A-1B	Q902	B-3C	R105	B-1B	R139	B-2C	R166	A-1C	R477	B-3A	R677	B-2A	R703	B-2B	R730	B-3A	R819	B-2B	R849	B-2A	R873	B-2B	R910	B-2B	R937	B-1A	C113	B-1C	C139	B-1C
IC118	B-1B	IC828	A-2B	Q903	B-2C	R106	B-1C	R140	B-2C	R167	B-1C	R478	B-3A	R678	B-2A	R704	B-2B	R750	B-1B	R820	B-2B	R850	B-1B	R874	B-3B	R911	B-2B	R938	B-1A	C114	B-1C	C140	B-1B
IC119	B-1C	IC829	A-2C	Q904	B-2C	R107	B-1C	R141	B-2C	R168	B-1C	R481	B-3B	R681	B-3B	R706	B-2A	R751	B-1B	R821	B-2B	R851	B-1B	R875	B-3A	R912	B-2B	R939	B-2C	C115	B-1B	C141	A-2C
IC417	A-3A	IC830	B-2B	Q905	B-2C	R114	B-1C	R142	B-2C	R169	B-1C	R551	B-3A	R682	B-2A	R707	B-2A	R752	B-2C	R822	B-2B	R852	B-1B	R876	B-2A	R913	B-2B	R940	B-2C	C116	B-1B	C142	B-1B
IC423	A-3A	IC832	B-2B	Q906	B-3C	R115	B-1C	R143	B-2C	R170	A-1B	R552	B-3A	R683	B-2A	R708	B-2A	R753	B-2C	R823	B-2B	R853	B-1B	R877	B-2A	R914	B-2B	R941	B-3B	C117	B-1C	C143	B-1B
IC481	A-3B	IC833	B-3B	Q907	B-1A	R116	B-1C	R144	B-1C	R190	A-1C	R553	B-3A	R684	B-2A	R709	A-2B	R754	B-1C	R824	B-1B	R854	B-1B	R878	B-2B	R915	B-2B	R942	B-3B	C118	B-1C	C144	B-2C
IC517	A-3A	IC900	B-3B	Q909	B-1A	R117	B-1C	R145	B-2C	R191	B-1C	R554	A-3A	R685	B-2A	R711	B-2A	R755	B-2C	R825	B-1B	R855	A-1A	R879	B-2B	R916	A-2C	R943	B-3B	C119	B-1C	C145	B-1B
IC581	A-3B	IC901	B-3B	Q910	B-1A	R118	B-1C	R146	B-2C	R210	B-3B	R555	B-3A	R686	B-2A	R712	B-2B	R756	B-2C	R826	B-1B	R856	B-1A	R880	B-2B	R917	B-2B	R944	B-3B	C120	B-2C	C146	B-1B
IC617	A-2A	IC902	B-3B	Q911	B-2C	R119	B-1C	R147	B-2C	R211	B-3B	R572	B-3A	R687	B-2B	R713	B-2A	R801	B-3B	R827	B-1B	R857	B-1A	R881	B-2B	R918	B-2B	R945	B-2B	C121	B-2C	C147	B-2C
IC623	A-3A	IC906	B-3C			R120	B-1C	R148	A-1C	R212	B-3B	R573	B-3A	R688	B-2B	R714	B-2B	R802	B-3B	R828	B-1B	R858	A-1B	R882	B-2B	R919	A-2C	R946	B-2B	C122	B-2C	C148	B-2C

IDE-V27525 / DRUCK: 13

– INNER PATTERN (SIDE A) –

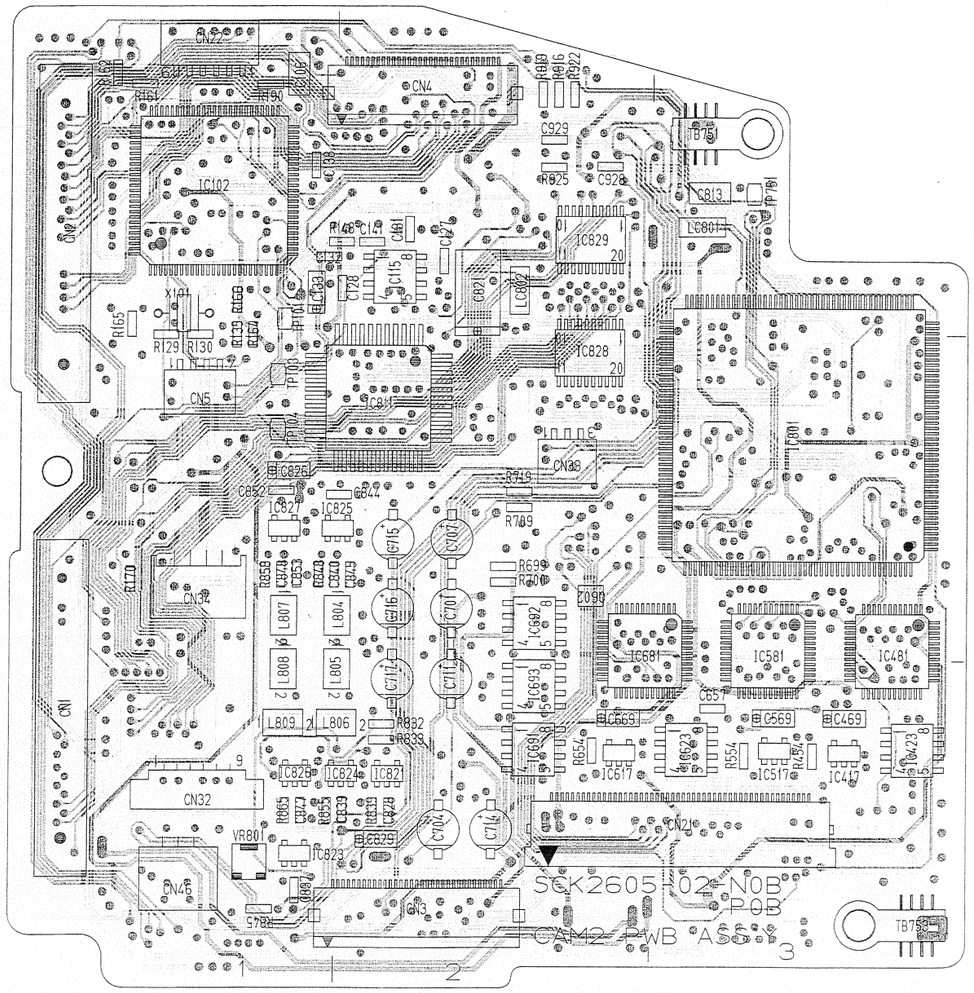

– INNER PATTERN (SIDE B) –

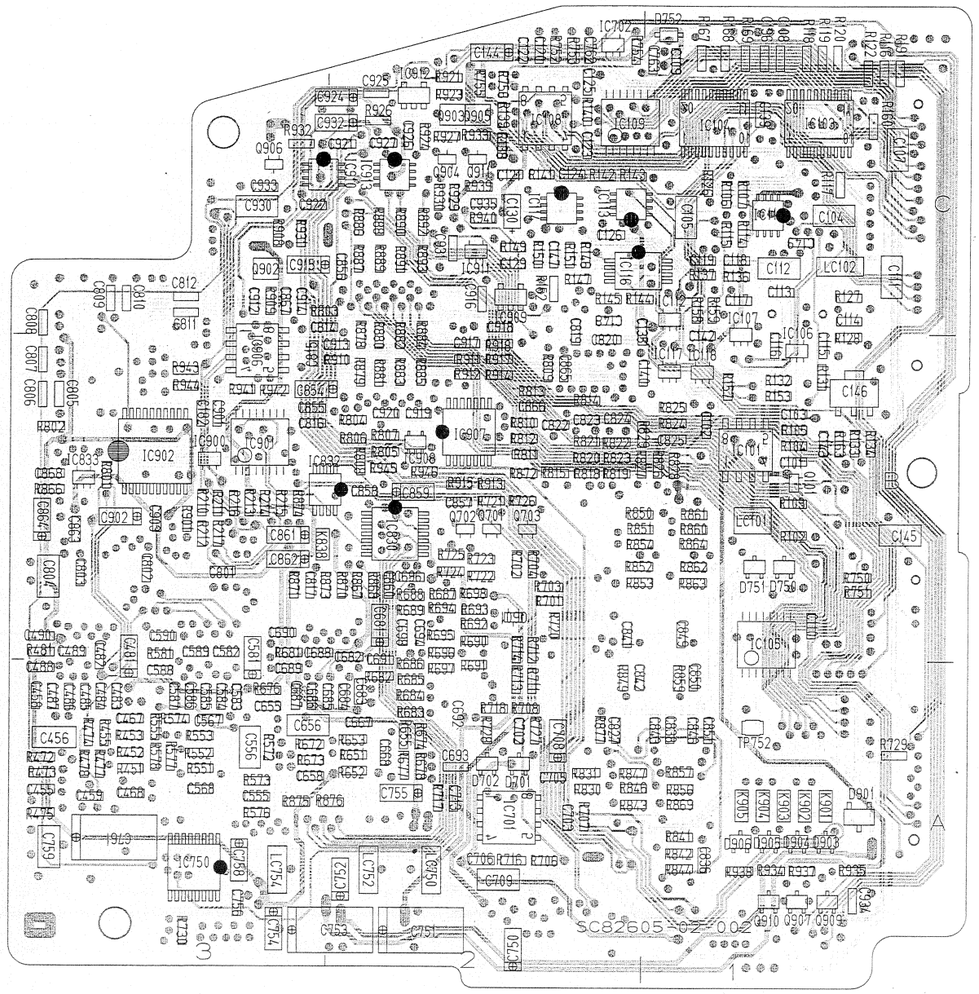

C149	B-1C	C581	B-3B	C688	B-2B	C750	B-2A	C813	A-3C	C844	A-1B	C868	B-3B	C933	B-3C	LC750	B-2A
C182	B-3B	C582	B-3B	C689	B-3A	C751	B-2A	C814	B-2C	C845	A-2B	C901	B-3B	C934	B-1A	LC752	B-2A
C455	B-3A	C583	B-3A	C690	B-3B	C752	B-2A	C815	B-3B	C846	B-1A	C902	B-3B	C935	B-2C	LC754	B-3A
C456	B-3A	C584	B-3A	C691	B-2B	C753	B-2A	C816	B-3B	C847	A-1A	C903	B-3B			LC801	A-3C
C458	B-3A	C585	B-3A	C692	B-2A	C754	B-3A	C817	B-3B	C848	A-1B	C912	B-3C	L804	A-1B	LC802	A-2C
C459	B-3A	C586	B-3A	C693	B-2A	C755	B-2A	C819	B-2C	C849	B-1B	C913	B-2B	L805	A-1A		
C467	B-3A	C587	B-3A	C694	B-2B	C756	B-3A	C820	B-2B	C850	B-1A	C914	B-3C	L806	A-1A	K838	B-2B
C468	B-3A	C588	B-3A	C696	B-2B	C758	B-3A	C821	A-2C	C851	B-1A	C915	B-3C	L807	A-1B	K901	B-1A
C469	A-3A	C589	B-3B	C698	B-2B	C759	B-3A	C822	B-2B	C852	A-1B	C916	B-2C	L808	A-1A	K902	B-1A
C481	B-3B	C590	B-3B	C701	A-2B	C761	B-3A	C823	B-2B	C853	A-1B	C917	B-2B	L809	A-1A	K903	B-1A
C482	B-3B	C655	B-3A	C702	B-2A	C762	B-2C	C824	B-2B	C854	B-3B	C918	B-2C			K904	B-1A
C483	B-3A	C656	B-3A	C703	B-2A	C763	B-1C	C825	B-1B	C855	B-3B	C919	B-2B	TP101	A-1C	K905	B-1A
C484	B-3A	C657	A-3A	C704	A-2A	C801	B-3B	C826	A-1B	C856	B-2C	C920	B-2B	TP103	A-1B		
C485	B-3A	C658	B-3A	C705	B-2A	C802	B-3B	C827	B-2A	C857	B-2B	C921	B-2C	TP104	A-1B	CN1	A-1A
C486	B-3A	C667	B-2A	C706	B-2A	C803	B-3B	C828	A-2A	C858	B-2B	C922	B-3C	TP751	A-3C	CN2	A-1C
C487	B-3A	C668	B-2A	C707	A-2B	C804	B-3B	C829	A-2A	C859	B-2B	C924	B-2C	TP752	B-1A	CN3	A-2A
C488	B-3A	C669	A-2A	C708	B-2A	C805	B-3B	C836	B-1A	C860	B-2B	C925	B-2C			CN4	A-2C
C489	B-3B	C681	B-2B	C709	B-2A	C806	B-3B	C837	A-1A	C861	B-3B	C926	B-2C	TB751	A-3C	CN5	A-1B
C490	B-3B	C682	B-2B	C711	A-2A	C807	B-3B	C838	B-1A	C862	B-3B	C927	B-2C	TB753	A-3A	CN21	A-3A
C555	B-3A	C683	B-2A	C713	B-2A	C808	B-3C	C839	A-1A	C863	B-3B	C928	A-2C			CN22	A-1C
C556	B-3A	C684	B-2A	C714	A-2A	C809	B-3C	C840	A-1B	C864	B-3B	C929	A-2C	X101	A-1C	CN32	A-1A
C567	B-3A	C685	B-2A	C715	A-2B	C810	B-3C	C841	B-2B	C865	B-2B	C930	B-3C			CN33	A-2B
C568	B-3A	C686	B-3A	C716	A-2B	C811	B-3C	C842	B-1A	C866	B-2B	C931	B-2C	LC101	B-1B	CN34	A-1B
C569	A-3A	C687	B-3A	C717	A-2A	C812	B-3C	C843	B-1A	C867	B-3C	C932	B-2C	LC102	B-1C	CN46	A-1A

4-18

4.11 PS(Power Supply)1, PS2 SCHEMATIC DIAGRAM (1/2) 17/18

– PS1 – 17

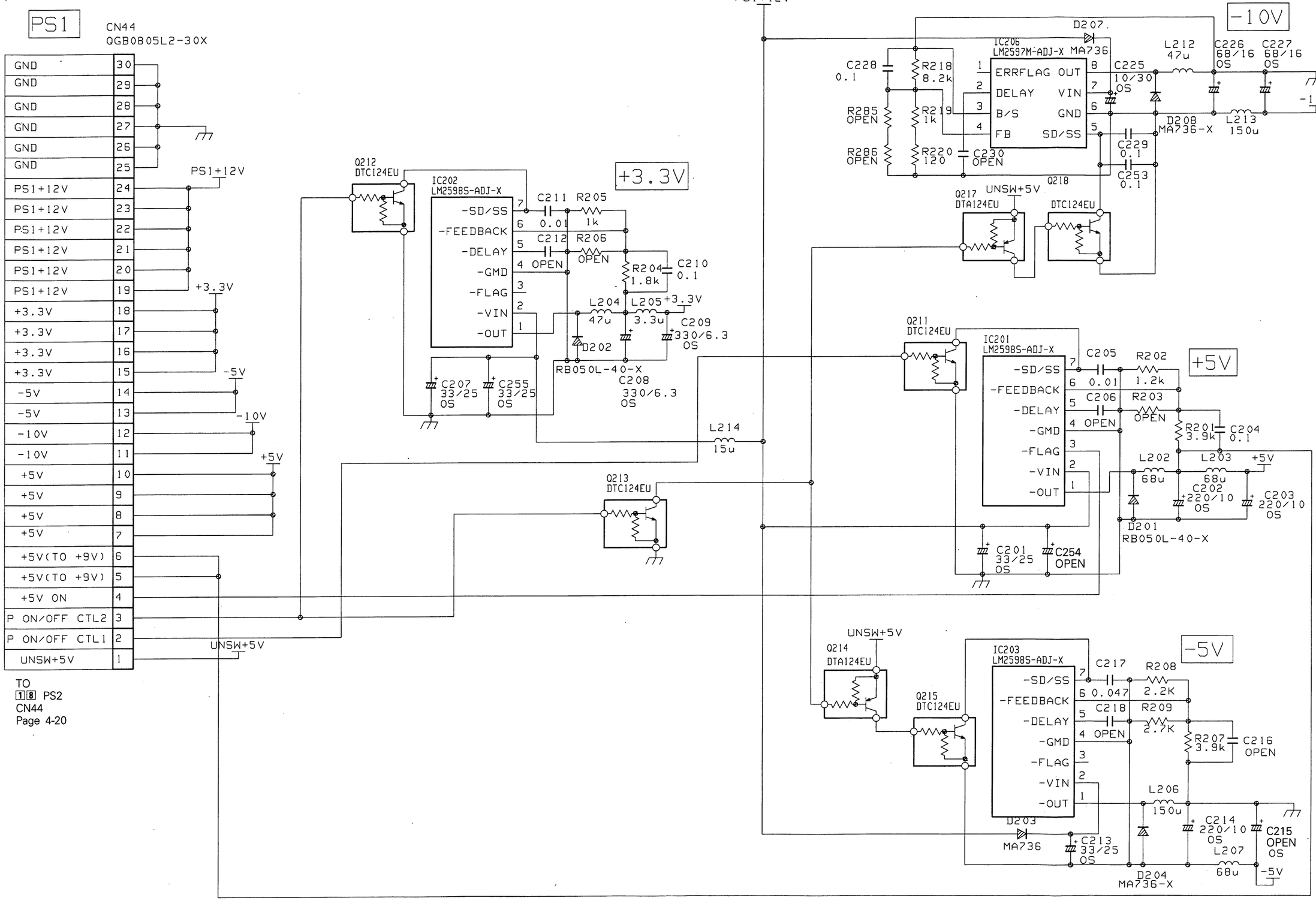

SC92651 1/2

IDE-V27525 / DRUCK: 15

• PS1, PS2 SCHEMATIC DIAGRAM (2/2) 17/18

— PS2 — 18

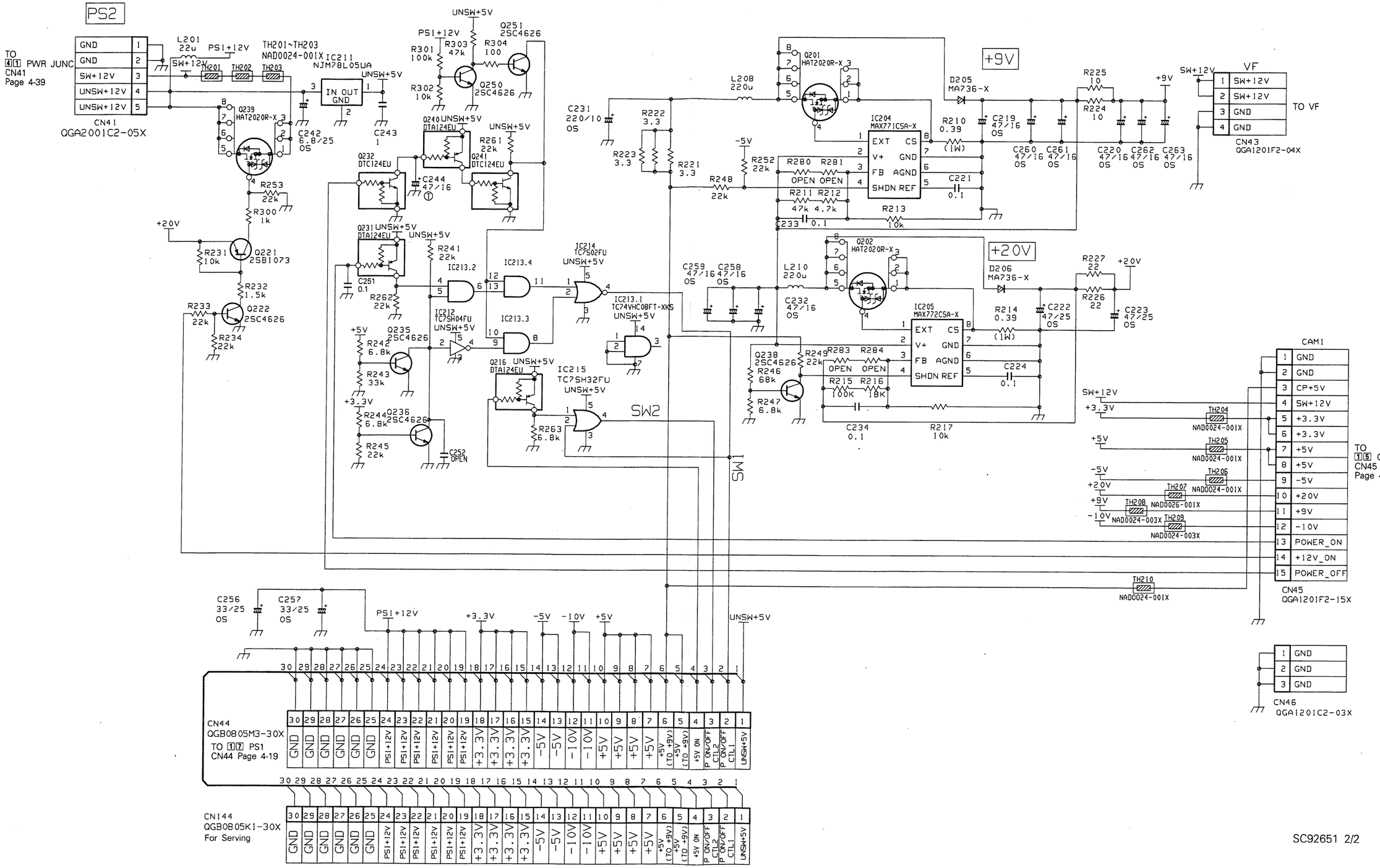

SC92651 2/2

4-20

4.12 PS1, PS2 CIRCUIT BOARD

· PS1

— SIDE A —

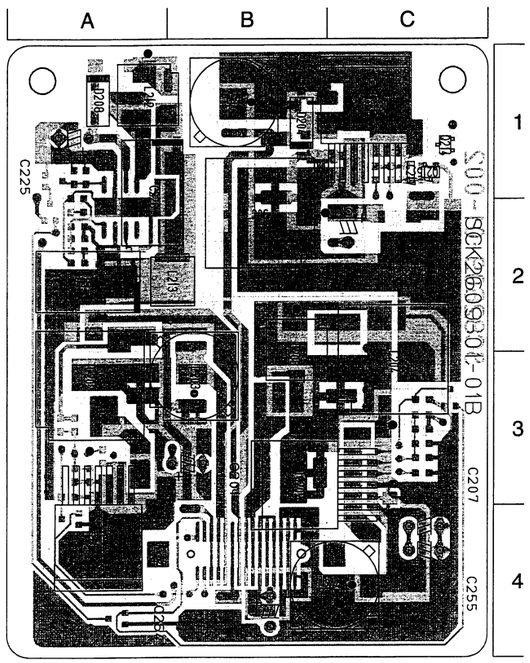

— SIDE B —

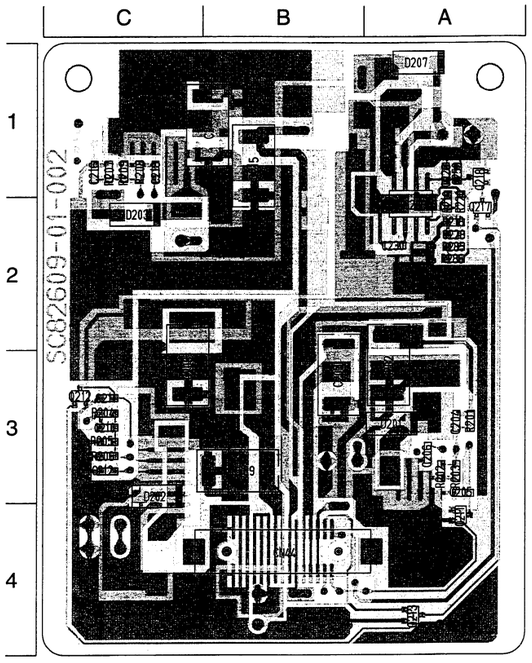

● **ADDRESS TABLE OF BOARD PARTS**
Each address may have an address error by one interval.

Side — A-1C (Y axis / X axis)

IC201	A-4A	R207	B-1C	C218	B-1C
IC202	A-3B	R208	B-1C	C225	A-1A
IC203	A-1C	R209	B-1C	C226	A-1A
IC206	B-2A	R218	B-2A	C227	A-2A
		R219	B-2A	C228	B-2A
Q211	B-4A	R220	B-2A	C229	B-1A
Q212	B-3C	R285	B-2A	C230	B-2A
Q213	B-4A	R286	B-2A	C253	B-1A
Q214	A-1C			C254	A-4B
Q215	A-1C	C201	A-3B	C255	A-4C
Q217	B-2A	C202	B-3A		
Q218	B-1A	C203	B-3B	L202	A-3A
		C204	B-3A	L203	A-3B
D201	B-3A	C205	B-3A	L204	A-3C
D202	B-3C	C206	B-3A	L205	A-2B
D203	B-2C	C207	A-4C	L206	A-2B
D204	A-1B	C208	B-3C	L207	A-1B
D207	B-1A	C209	B-3B	L212	A-1A
D208	A-1A	C210	B-3C	L213	A-2B
		C211	B-3C	L214	A-4C
R201	B-3A	C212	B-3C		
R202	B-3A	C213	A-2C	CN44	B-4B
R203	B-3A	C214	B-1B		
R204	B-3C	C215	B-1B		
R205	B-3C	C216	B-1C		
R206	B-3C	C217	A-1C		

· PS2

— SIDE A —

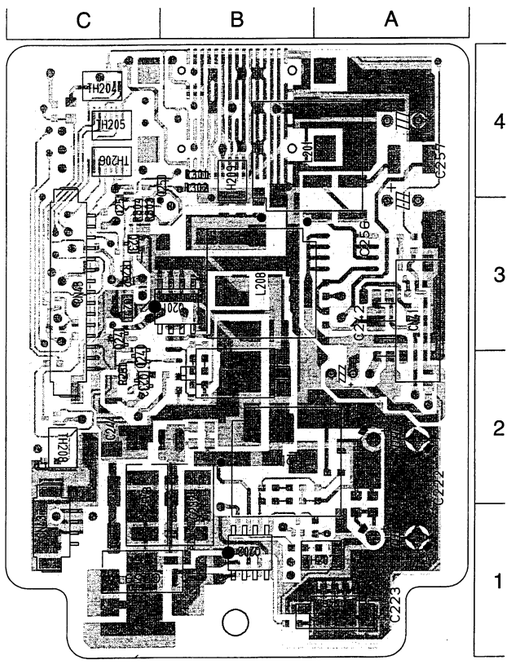

— SIDE B —

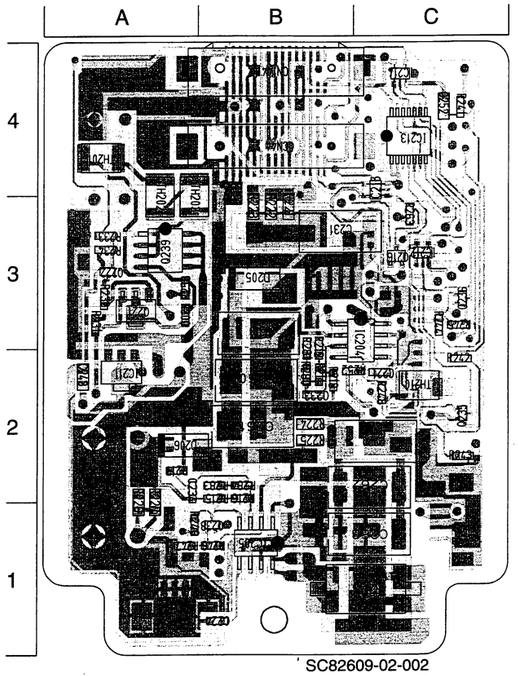

● **ADDRESS TABLE OF BOARD PARTS**
Each address may have an address error by one interval.

Side — A-1C (Y axis / X axis)

IC204	B-3B	D205	B-3B	R243	B-2C	C221	B-2C	L210	A-2B
IC205	B-1B	D206	B-2A	R244	B-3C	C222	A-2A		
IC211	B-2A			R245	B-3C	C223	A-1A	TH201	B-4A
IC212	B-3C	R210	A-2B	R246	B-1B	C224	B-1B	TH202	B-3A
IC213	B-4C	R211	B-2B	R247	B-1A	C231	B-3B	TH203	B-3A
IC214	B-4C	R212	B-3B	R248	B-2C	C232	A-1B	TH204	A-4C
IC215	B-4C	R213	B-2B	R249	B-1A	C233	B-2B	TH205	A-4C
		R214	B-1B	R252	B-2B	C234	B-2A	TH206	A-4C
Q201	A-3B	R215	B-1B	R253	B-3A	C242	A-2A	TH207	A-1A
Q202	A-1B	R216	B-1B	R261	A-2C	C243	B-2A	TH208	A-2C
Q216	B-3C	R217	B-2A	R262	A-3C	C244	A-2C	TH209	A-4B
Q221	B-3A	R221	B-3B	R263	B-3C	C251	A-3C	TH210	B-2C
Q222	B-3A	R222	B-3B	R280	B-2B	C252	B-4C		
Q231	A-3C	R223	B-3B	R281	B-3B	C256	A-3A	CN41	A-3A
Q232	A-2C	R224	B-2B	R283	B-2B	C257	A-4A	CN43	A-1C
Q235	B-2C	R225	B-2B	R284	B-2B	C258	A-1B	CN44	B-4B
Q236	B-3C	R226	B-1A	R300	B-3A	C259	A-1C	CN45	A-3C
Q238	B-1B	R227	B-1A	R301	A-4B	C260	B-2B	CN46	A-1A
Q239	B-3A	R231	B-3A	R302	A-4B	C261	B-2B	CN144	B-4B
Q240	A-2C	R232	B-3A	R303	A-3B	C262	B-2C		
Q241	A-3C	R233	B-3A	R304	A-3C	C263	B-1C		
Q250	A-4B	R234	B-3A						
Q251	A-3C	R241	B-4C	C219	B-3B	L201	A-4A		
		R242	B-2C	C220	B-2C	L208	A-3B		

IDE-V27525 / DRUCK: 17

4.13 IF(InterFace), ROM(Read Only Memory) SCHEMATIC DIAGRAM 21/19

• IF 21

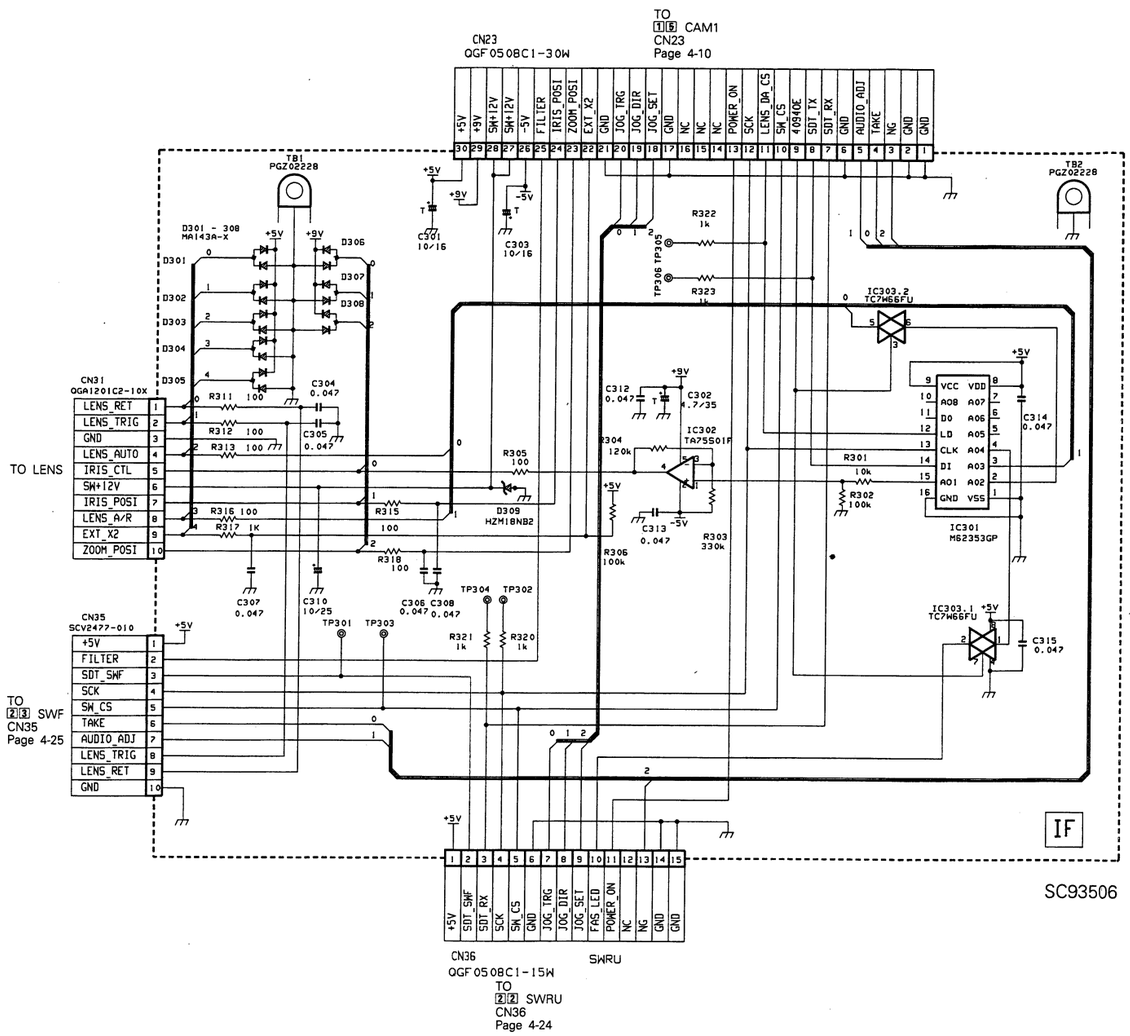

SC93506

• ROM 19

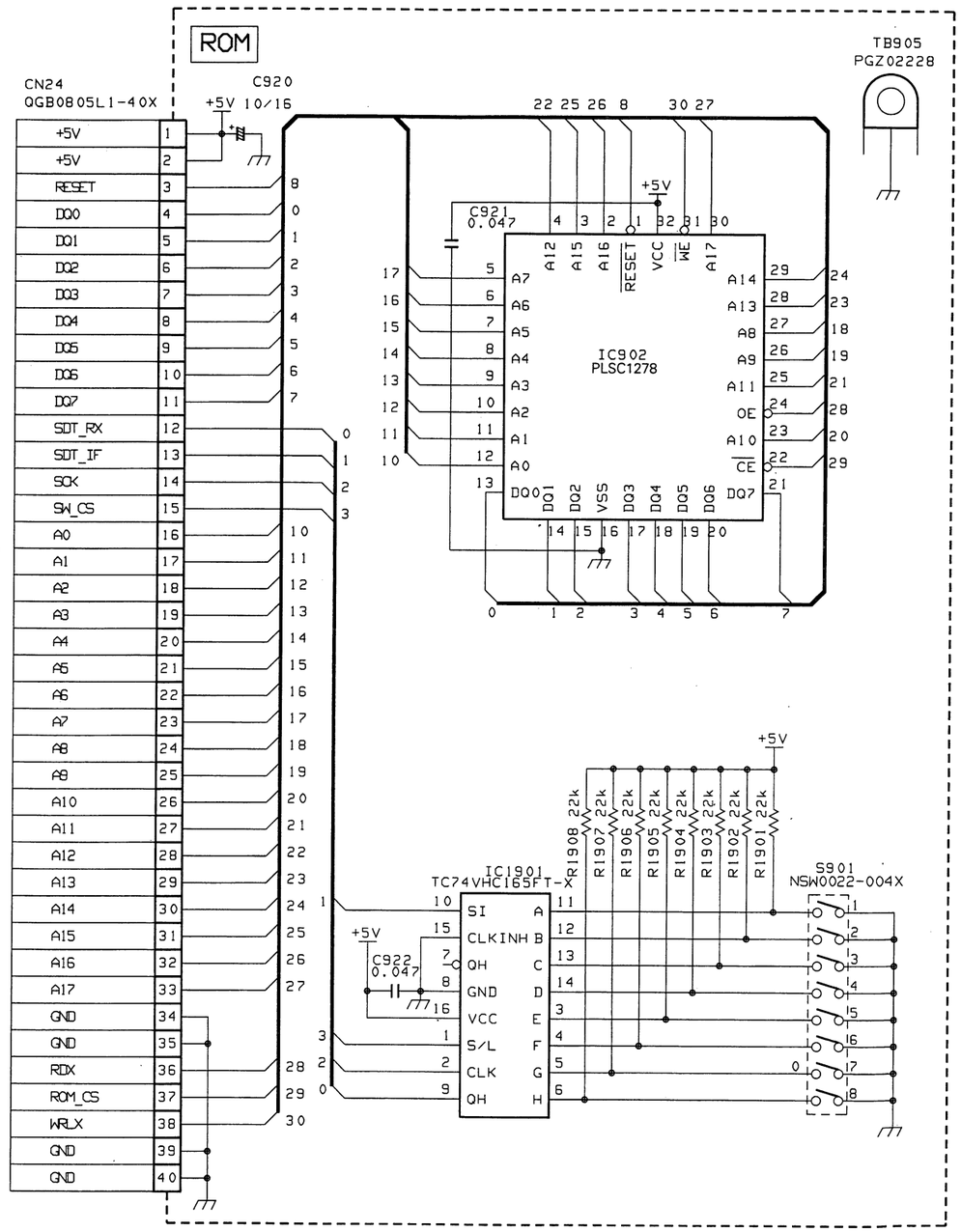

SC93504

4.14 IF, ROM CIRCUIT BOARD

• IF

— SIDE A —

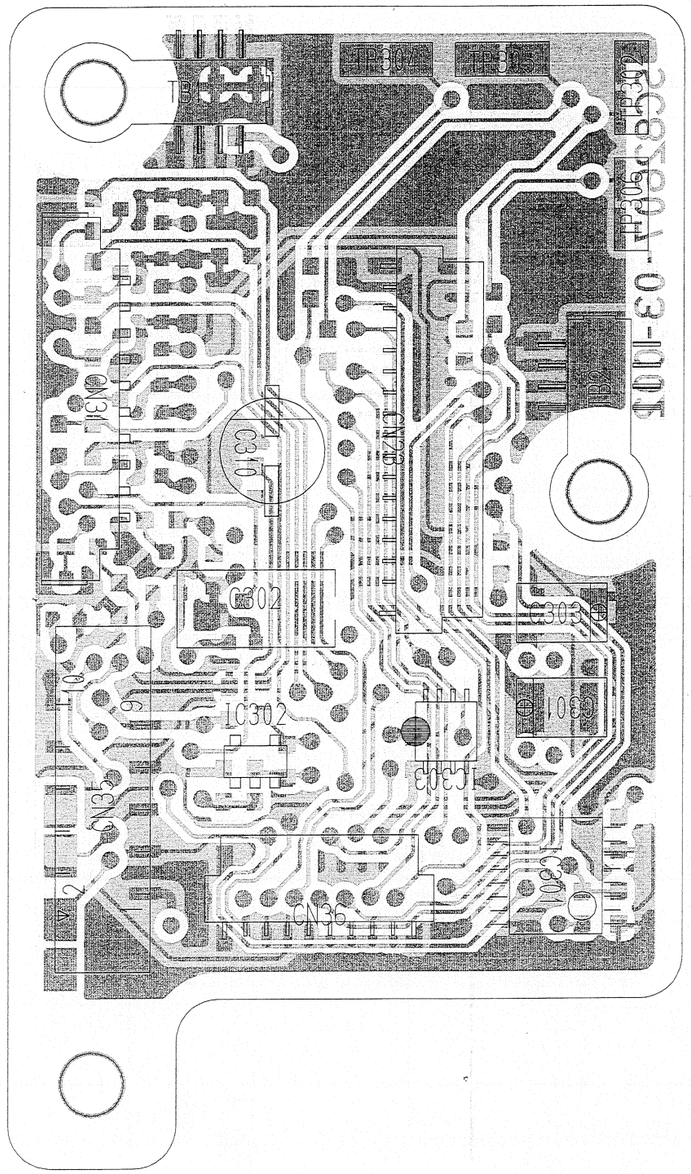

— SIDE B —

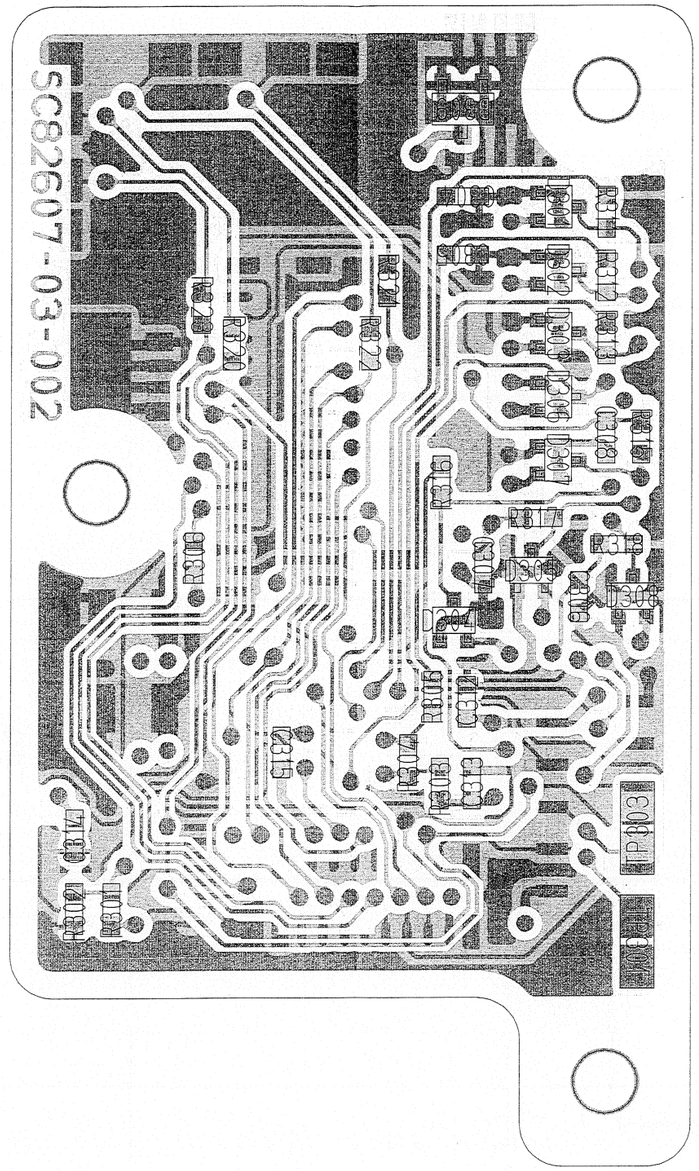

• ROM

— SIDE A —

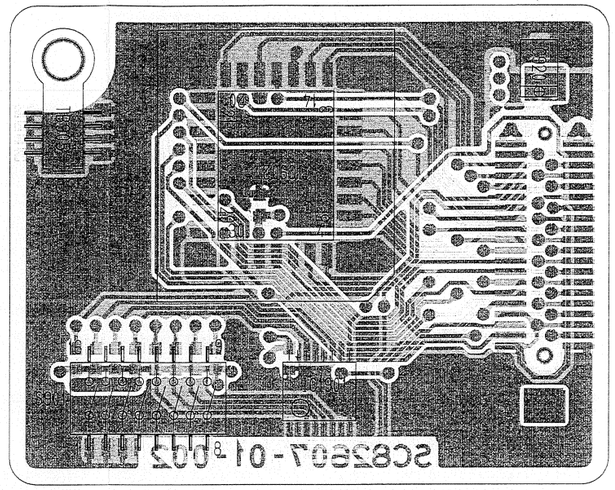

— SIDE B —

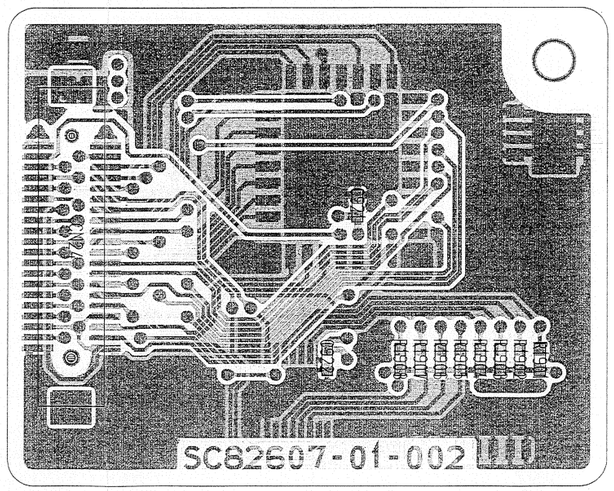

IDE-V27525 / DRUCK: 19

4.15 SWRU, JOG SCHEMATIC DIAGRAM 22/20

• SWRU 22

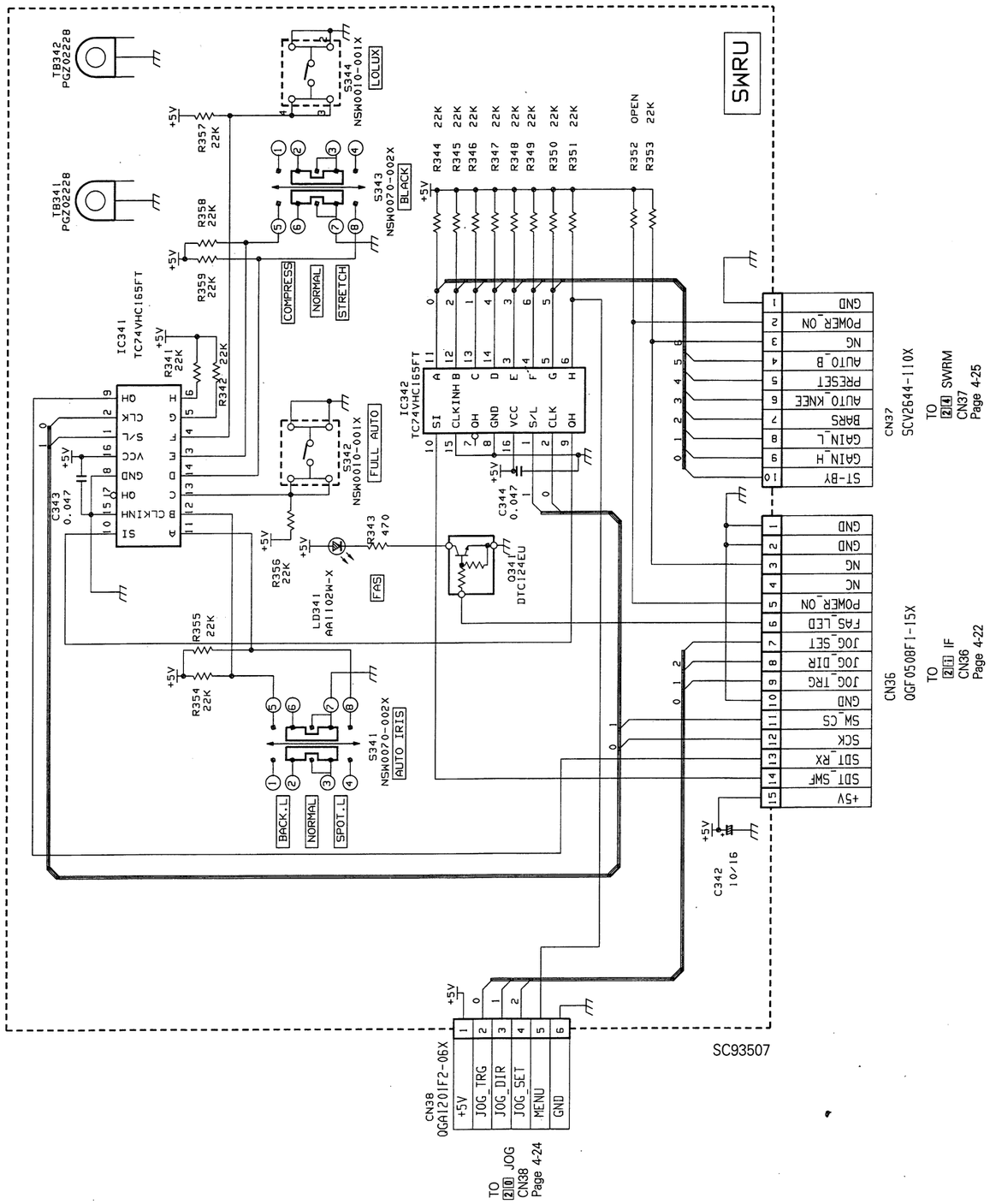

• JOG 20

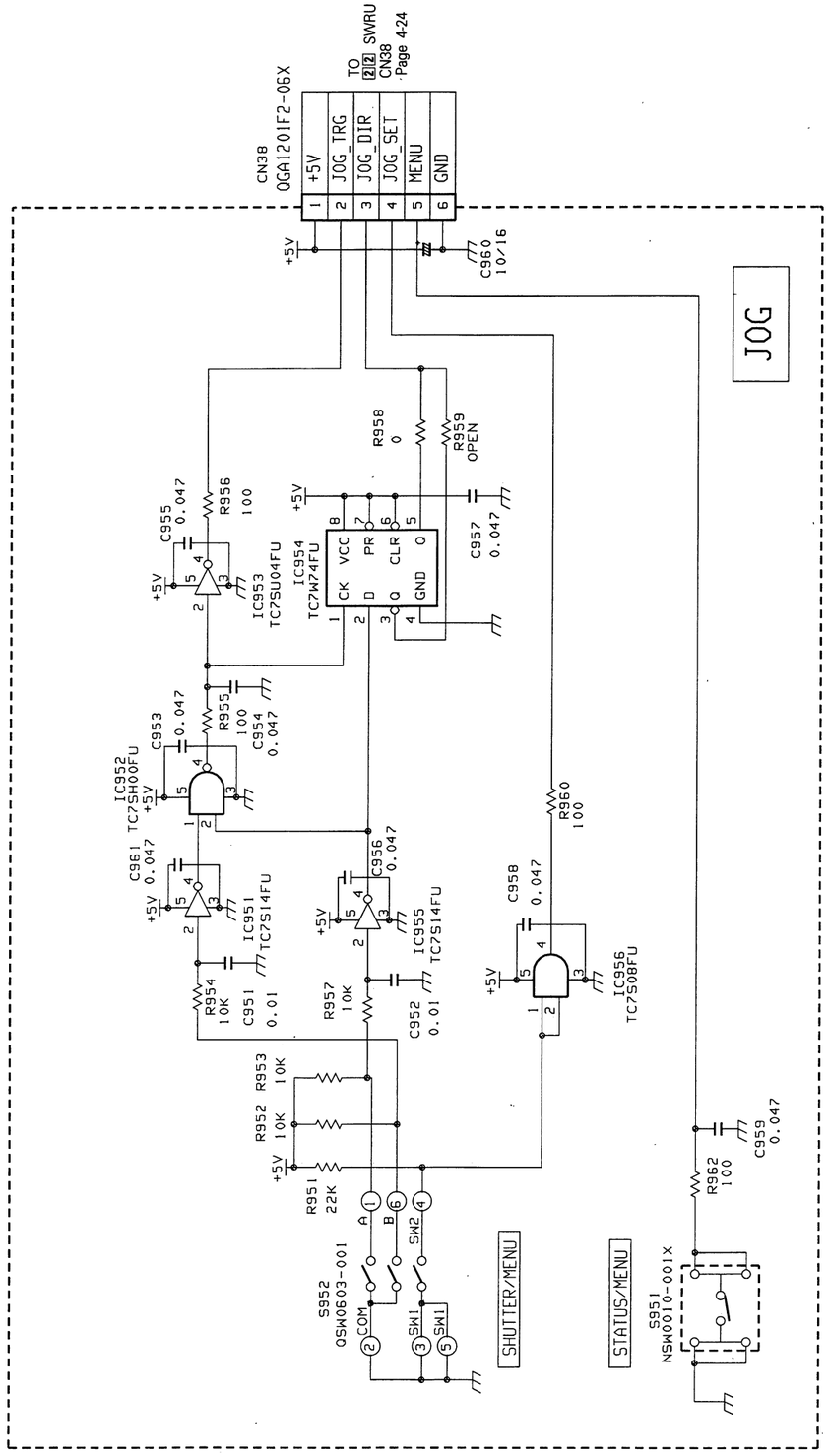

4.16 SWF, SWRM, SWRB, SWPW, MIC, BNC SCHEMATIC DIAGRAM 23/24/25/26/27/28

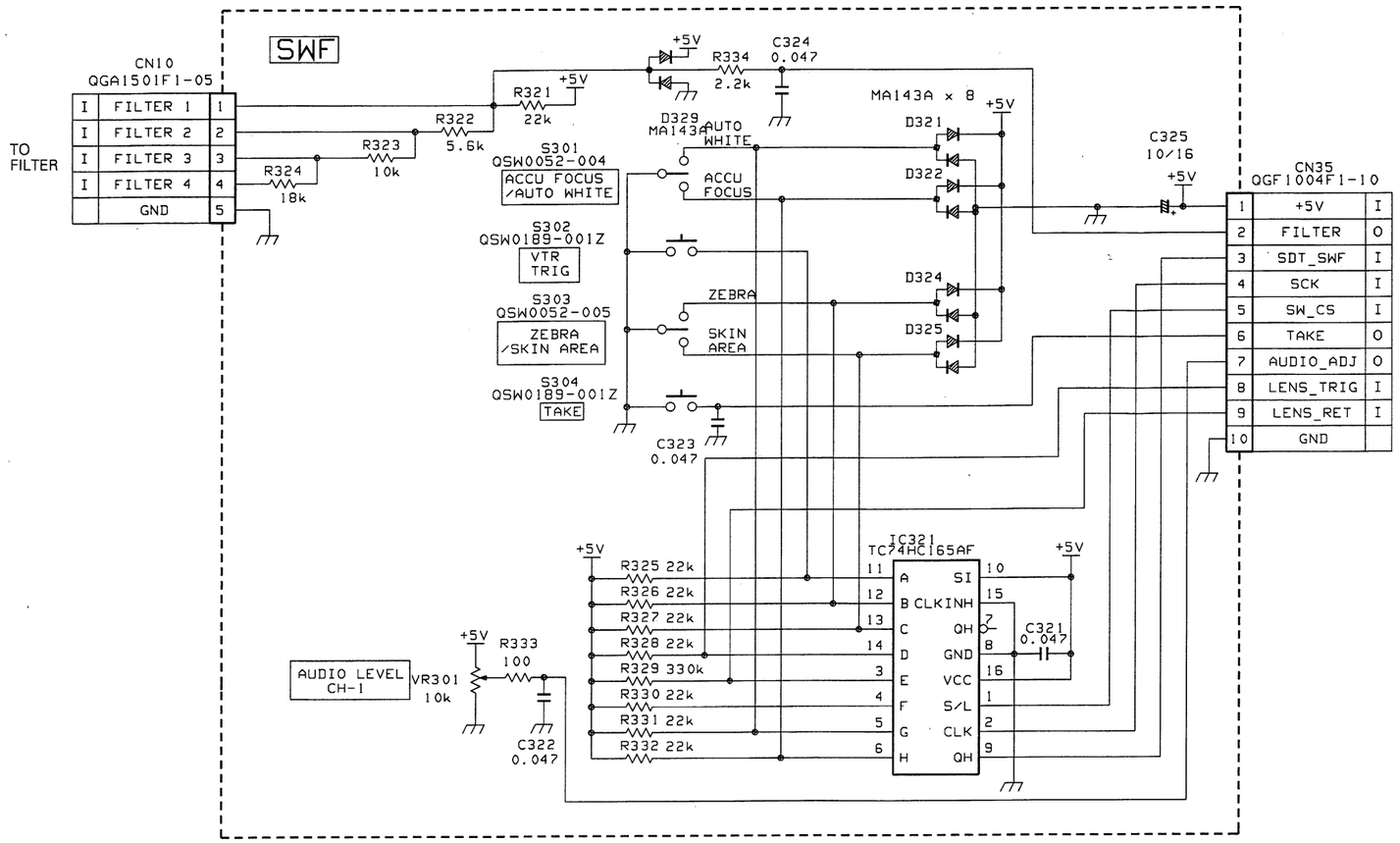

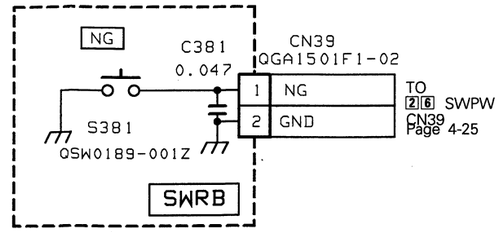

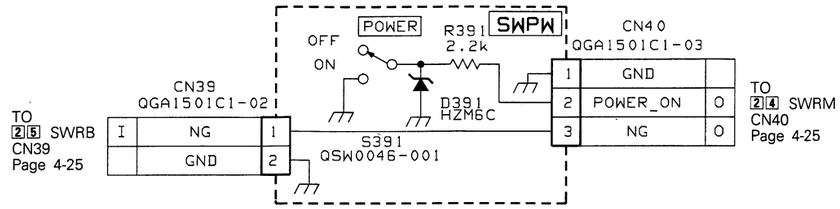

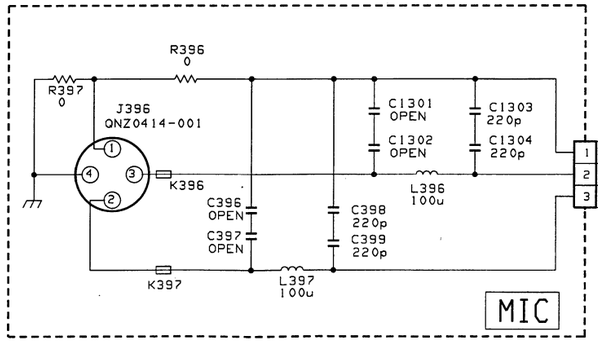

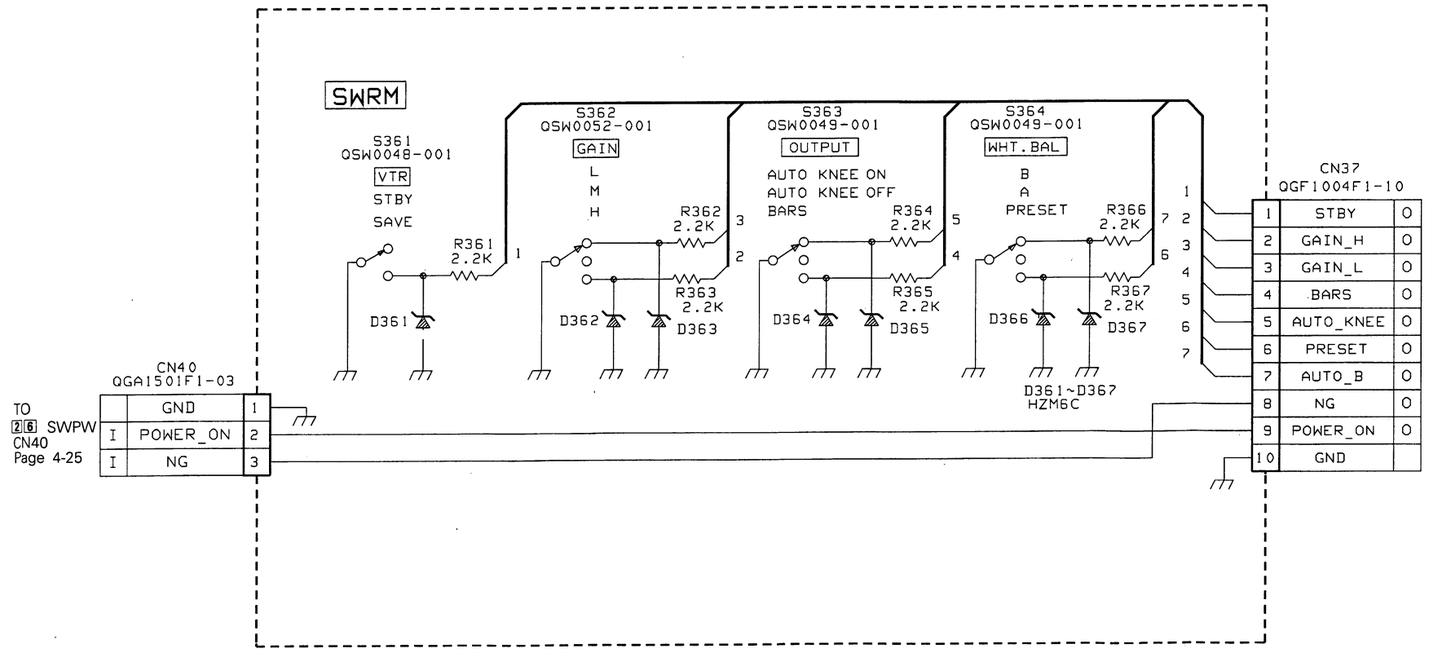

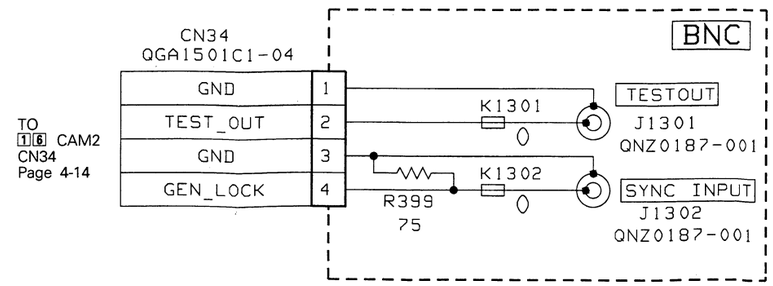

SC92648

4.17 SWRU, JOG, SWF, SWRM, SWRB, SWPW, MIC, BNC, FL CIRCUIT BOARD

• SWRU

— SIDE A —

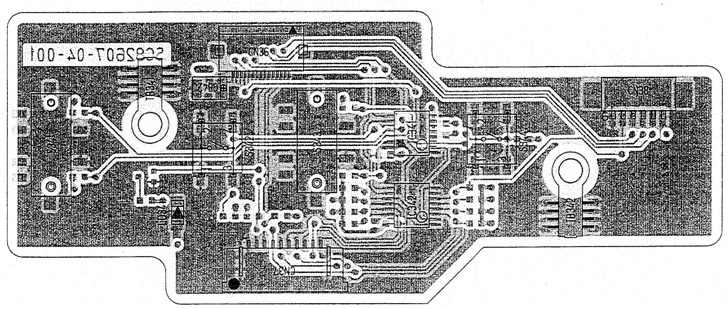

— SIDE B —

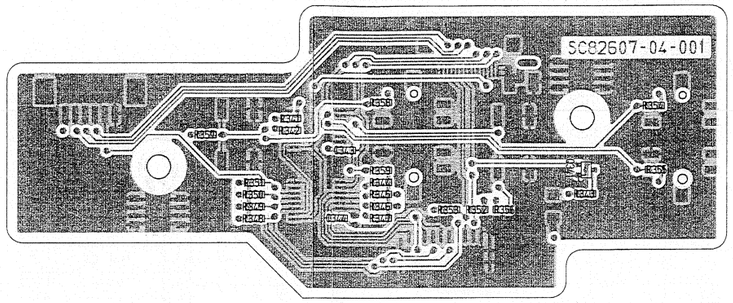

• SWRB

— SIDE B —

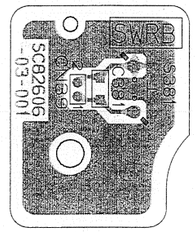

• SWPW

— SIDE B —

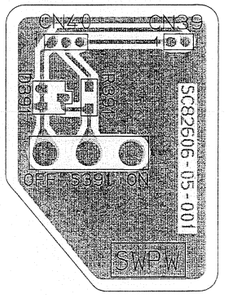

• JOG

— SIDE A —

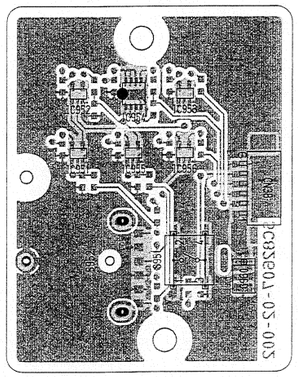

— SIDE B —

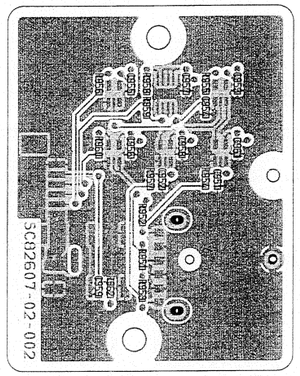

• SWRM

— SIDE B —

• MIC

— SIDE B —

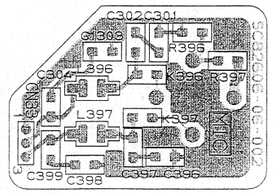

• BNC

— SIDE B —

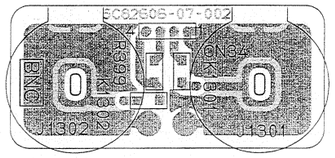

• SWF

— SIDE B —

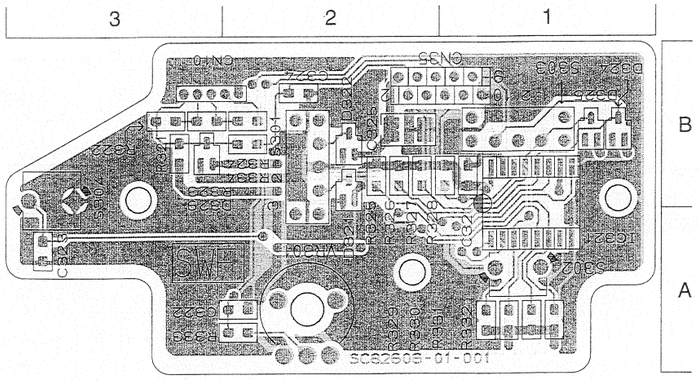

● ADDRESS TABLE OF BOARD PARTS

Each address may have an address error by one interval.

Side — A-1C (Y axis, X axis)

IC321	1B	R328	1B	CN10	3B
		R329	1A	CN35	2B
D321	2B	R330	1A		
D322	2B	R331	1A	S301	2B
D324	1B	R332	1A	S302	1A
D325	1B	R333	2A	S303	1B
D329	3B	R334	2B	S304	3B
R321	3B	VR301	2A		
R322	3B				
R323	3B	C321	1B		
R324	2B	C322	2A		
R325	2B	C323	3A		
R326	2B	C324	2B		
R327	2B	C325	2B		

• FL

— SIDE B —

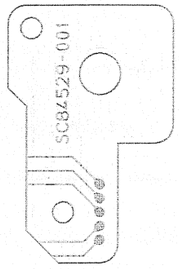

4.18 VIDEO/SYSCON SCHEMATIC DIAGRAM (1/2) 3 1

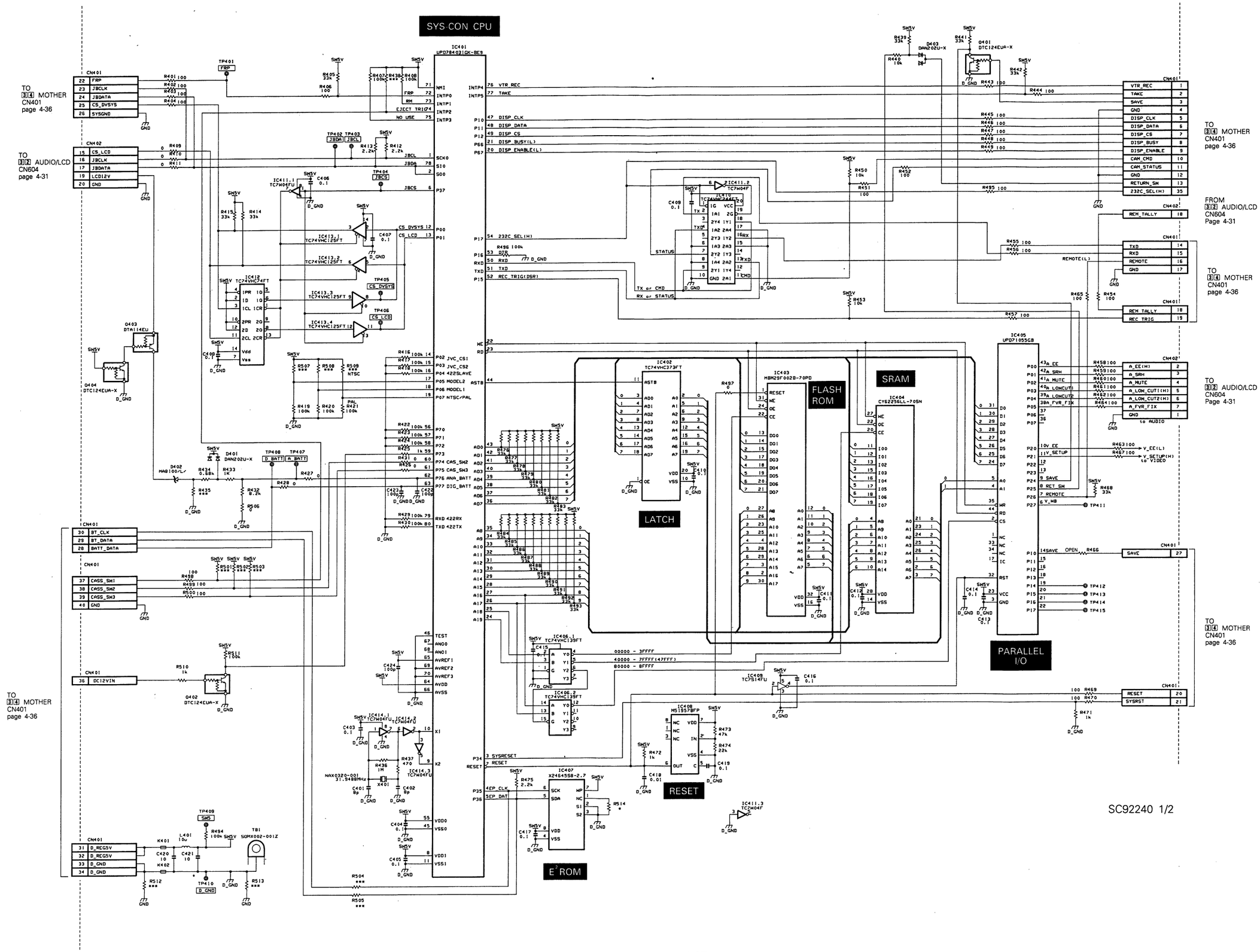

• VIDEO/SYSCON SCHEMATIC DIAGRAM (2/2) 3 1

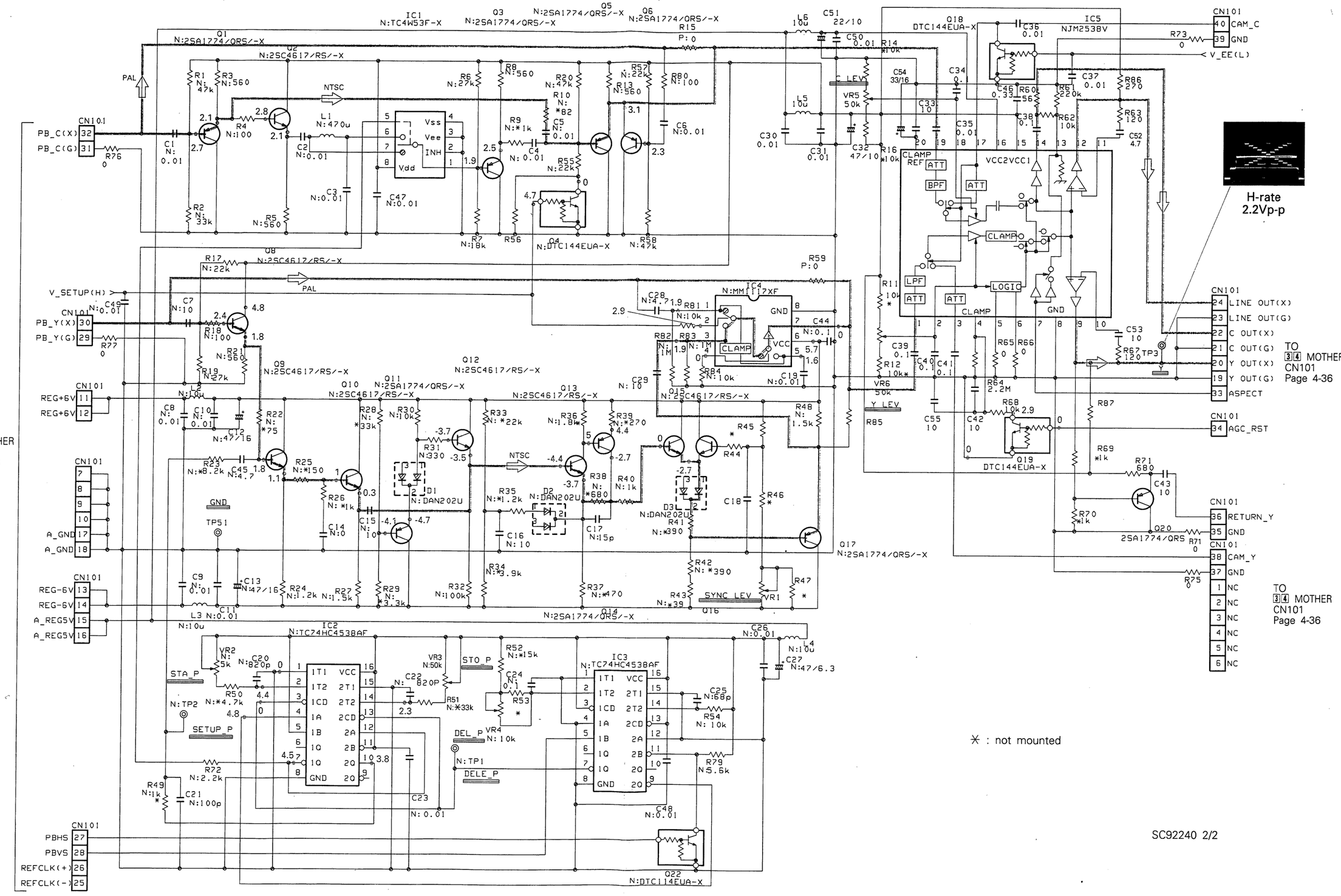

4.19 VIDEO/SYSCON CIRCUIT BOARD

— SIDE A —

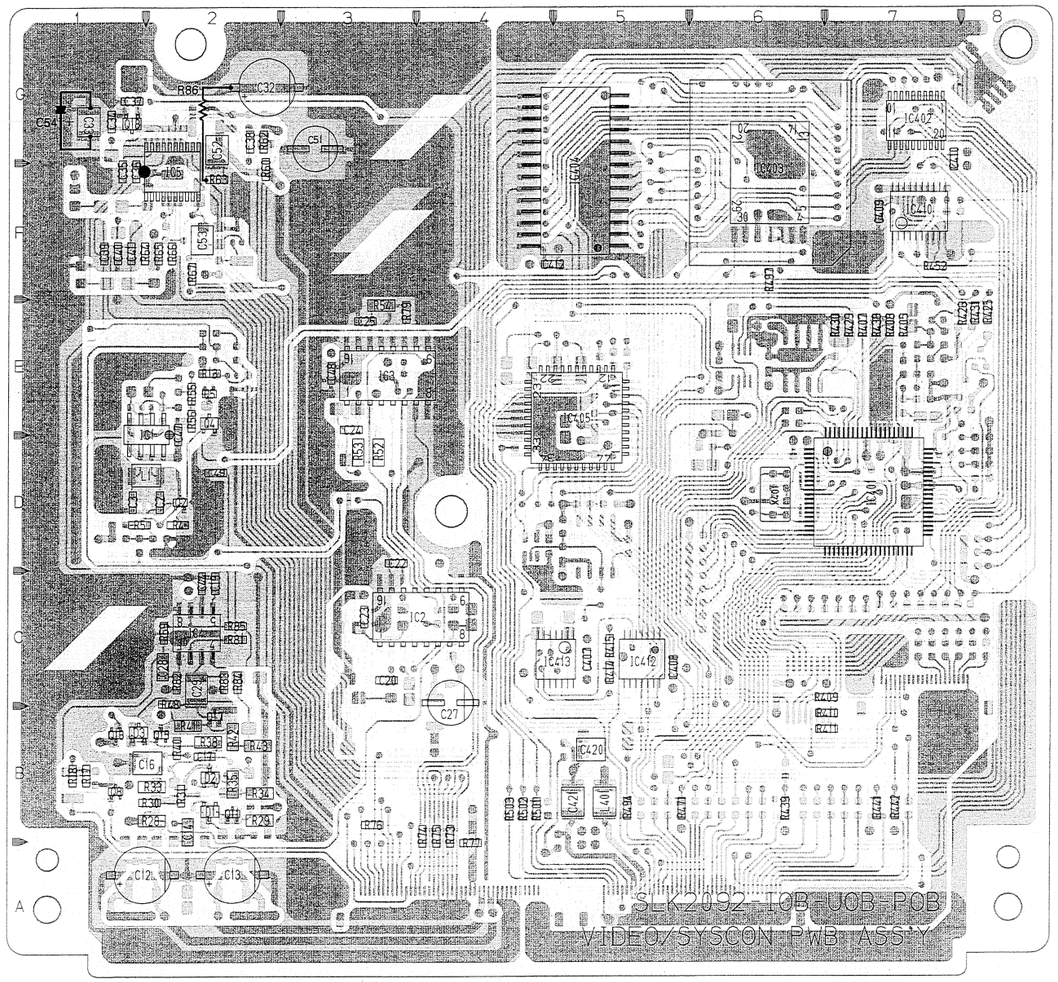

— SIDE B —

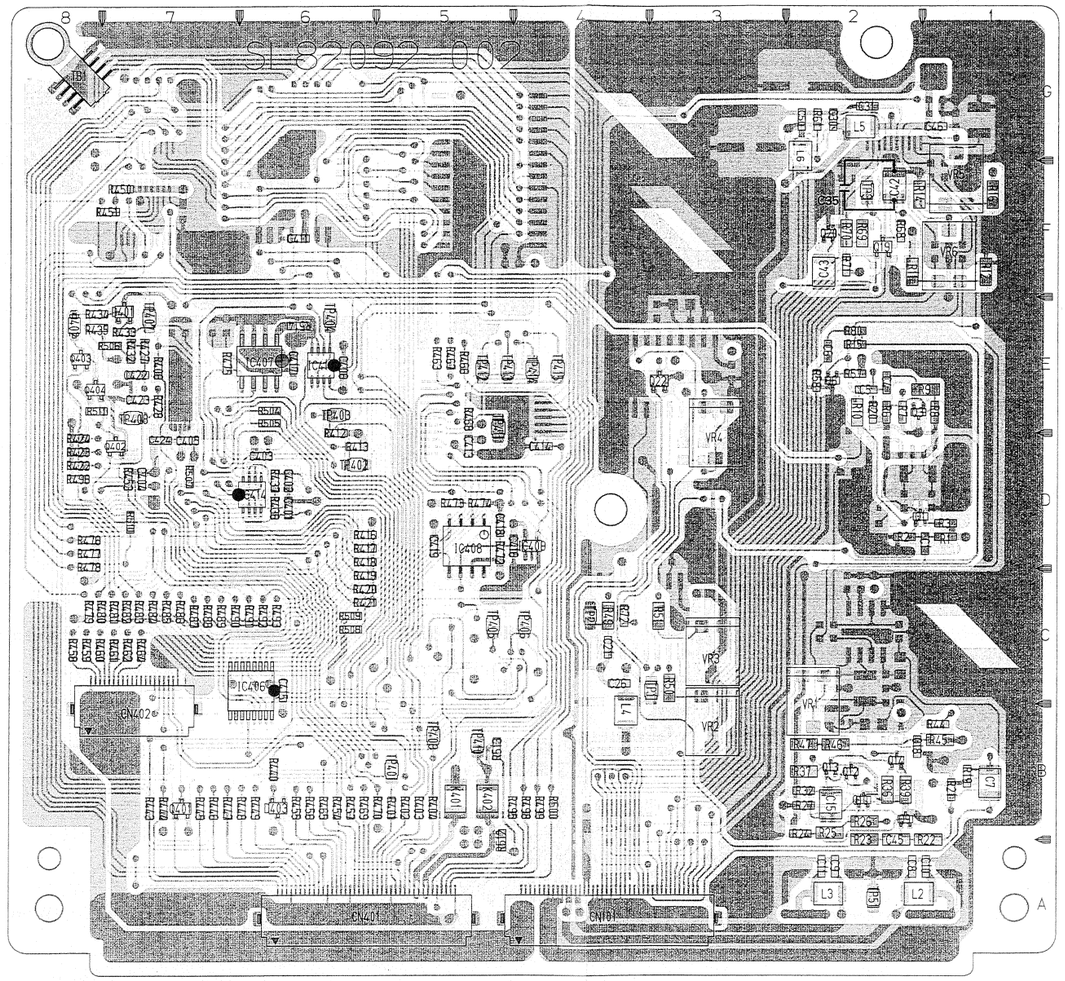

● **ADDRESS TABLE OF BOARD PARTS**

Each address may have an address error by one interval.

Side A-1C — Y axis, X axis

IC1	A-2E	Q9	B-2B	R3	B-1D	R30	A-2B	R57	B-2E	R85	A-2C	R427	B-7E	R454	B-6B	R481	B-8C	R508	B-6C	C13	A-2A	C40	A-1F	C414	B-4D	TP404	B-6E
IC2	A-3C	Q10	B-2B	R4	A-2D	R31	A-2B	R58	B-2E	R401	B-6B	R428	B-7E	R455	B-6B	R482	B-8C	R509	B-6C	C14	A-2B	C41	A-1F	C415	B-6C	TP405	B-5C
IC3	A-3E	Q11	A-2B	R5	A-1D	R32	B-2B	R59	A-2C	R402	B-5B	R429	A-7E	R456	B-6B	R483	B-7C	R510	B-8D	C15	B-2B	C42	B-2F	C416	B-5D	TP406	B-5C
IC4	A-2C	Q12	B-2B	R6	B-2E	R33	A-2B	R60	A-2F	R403	B-5B	R430	A-7E	R457	B-6B	R484	B-7C	R511	B-8E	C16	A-2B	C43	B-2F	C417	B-6E	TP407	B-7E
IC5	A-2F	Q13	B-2B	R7	B-2E	R34	A-2B	R61	B-2G	R404	B-5B	R431	A-8E	R458	B-8C	R485	B-7C	R512	B-5A	C17	A-2B	C44	A-2C	C418	B-5D	TP408	B-8E
IC401	A-7D	Q14	B-2B	R8	B-1E	R35	A-2B	R62	A-2G	R405	A-7E	R432	B-8E	R459	B-8C	R486	B-7C	R513	B-5B	C18	B-2B	C45	B-2B	C419	B-5D	TP409	B-5B
IC402	A-8G	Q15	A-2B	R9	B-1E	R36	B-2B	R63	A-2F	R406	B-7E	R433	B-8E	R460	B-8C	R487	B-7C	R514	B-6E	C19	A-2C	C46	B-1G	C420	A-5B	TP410	B-5B
IC403	A-6F	Q16	A-1B	R10	B-2E	R37	B-2B	R64	A-2F	R407	A-7E	R434	B-8E	R461	B-8C	R488	B-7C			C20	A-3C	C47	A-2E	C421	A-5B	TP411	B-5E
IC404	A-5F	Q17	A-2B	R11	B-2F	R38	A-2B	R65	A-2F	R408	A-7E	R435	B-8E	R462	B-8C	R489	B-7C	VR1	B-2C	C21	B-4C	C48	A-3E	C422	B-8E	TP412	B-5E
IC405	A-5E	Q18	A-1G	R12	B-1F	R39	B-2B	R66	A-2F	R409	A-7C	R436	B-6D	R463	B-5E	R490	B-7C	VR2	B-3B	C22	A-3D	C49	A-2D	C423	B-8E	TP413	B-5E
IC406	B-7C	Q19	B-2F	R13	A-2E	R40	A-2B	R67	A-2F	R410	A-7B	R437	B-6D	R464	B-7C	R491	B-7C	VR3	B-3C	C23	A-3C	C50	B-2G	C424	B-7D	TP414	B-4E
IC407	B-7E	Q20	B-2F	R14	B-2F	R41	A-2B	R68	B-2F	R411	A-7B	R438	A-7E	R465	B-6B	R492	B-7C	VR4	B-3E	C24	A-3E	C51	A-3G			TP415	B-4E
IC408	B-5D	Q22	B-3E	R15	B-2E	R42	A-2B	R69	B-2F	R412	B-6E	R439	A-6B	R466	B-5E	R493	B-6C	VR5	B-1F	C25	A-3E	C52	A-2G	L1	A-2D		
IC409	B-4D	Q401	B-7B	R16	B-1F	R43	A-2B	R70	B-2F	R413	B-6D	R440	B-6B	R467	B-5E	R494	A-5B	VR6	B-1F	C26	B-4C	C53	A-2F	L2	B-2A	TB1	B-8G
IC410	A-7F	Q402	B-8D	R17	A-1B	R44	B-1B	R71	B-2F	R414	A-5C	R441	A-7B	R468	B-5E	R495	B-5B			C27	A-4C	C401	B-6D	L3	B-2A		
IC411	B-6E	Q403	B-8E	R18	A-1B	R45	B-1B	R72	B-4C	R415	A-5C	R442	A-7B	R469	B-6B	R496	B-8D	C1	B-1D	C28	A-2C	C402	B-6D	L4	B-4B	CN101	B-4A
IC412	A-6C	Q404	B-8E	R19	B-1B	R46	B-2B	R73	A-4B	R416	B-6D	R443	B-7B	R470	B-6B	R497	A-6F	C2	A-2D	C29	A-2C	C403	B-7D	L5	B-2G	CN401	B-6A
IC413	A-5C			R20	B-2E	R47	B-2B	R74	A-4B	R417	B-6D	R444	B-7B	R471	A-6B	R498	B-5B	C3	A-1D	C30	B-2G	C404	B-7D	L6	B-2G	CN402	B-8B
IC414	B-7D	D1	A-2B	R21	B-1B	R48	A-2C	R75	A-4B	R418	B-6D	R445	B-7B	R472	B-5D	R499	B-4B	C4	B-2E	C31	B-2G	C405	B-7D	L401	A-5B		
		D2	A-2B	R22	B-1B	R49	B-4C	R76	A-3B	R419	B-6C	R446	B-7B	R473	B-5D	R500	B-4B	C5	B-2E	C32	A-2G	C406	B-6E			X401	A-6D
Q1	B-2D	D3	A-1B	R23	B-2B	R50	B-3C	R77	A-4A	R420	B-6C	R447	B-7B	R474	B-5D	R501	A-5B	C6	B-2E	C33	A-1G	C407	A-5C	TP1	B-4C		
Q2	A-2D	D401	B-8E	R24	B-2B	R51	B-3C	R79	A-4E	R421	B-6C	R448	B-7B	R475	B-7E	R502	A-4B	C7	B-1B	C34	A-1G	C408	A-6C	TP2	B-4C	K401	B-5B
Q3	B-2E	D402	B-8E	R25	B-2B	R52	A-3D	R80	B-2E	R422	B-8D	R449	B-7B	R476	B-8D	R503	A-4B	C8	B-2A	C35	A-1F	C409	A-7F	TP3	B-2F	K402	B-5B
Q4	A-2E	D403	B-6B	R26	B-2B	R53	A-3D	R81	A-2C	R423	B-8D	R450	B-8F	R477	B-8D	R504	B-6E	C9	B-2A	C36	A-1F	C410	A-8G	TP51	B-2A		
Q5	A-2E			R27	B-2B	R54	A-3E	R82	A-2C	R424	B-8D	R451	B-8F	R478	B-8D	R505	B-6E	C10	B-1A	C37	A-1G	C411	B-6F	TP401	B-6B		
Q6	B-2E	R1	B-1D	R28	A-2B	R55	A-2E	R83	A-2C	R425	A-8E	R452	A-8F	R479	B-8C	R506	B-8E	C11	B-2A	C38	A-2G	C412	A-5F	TP402	B-6D		
Q8	A-1B	R2	B-2D	R29	A-2B	R56	A-2E	R84	A-2C	R426	A-8E	R453	B-8D	R480	B-8C	R507	B-7D	C12	A-2A	C39	A-1F	C413	B-5D	TP403	B-6E		

4.20 AUDIO/LCD SCHEMATIC DIAGRAM (1/2) 3 2

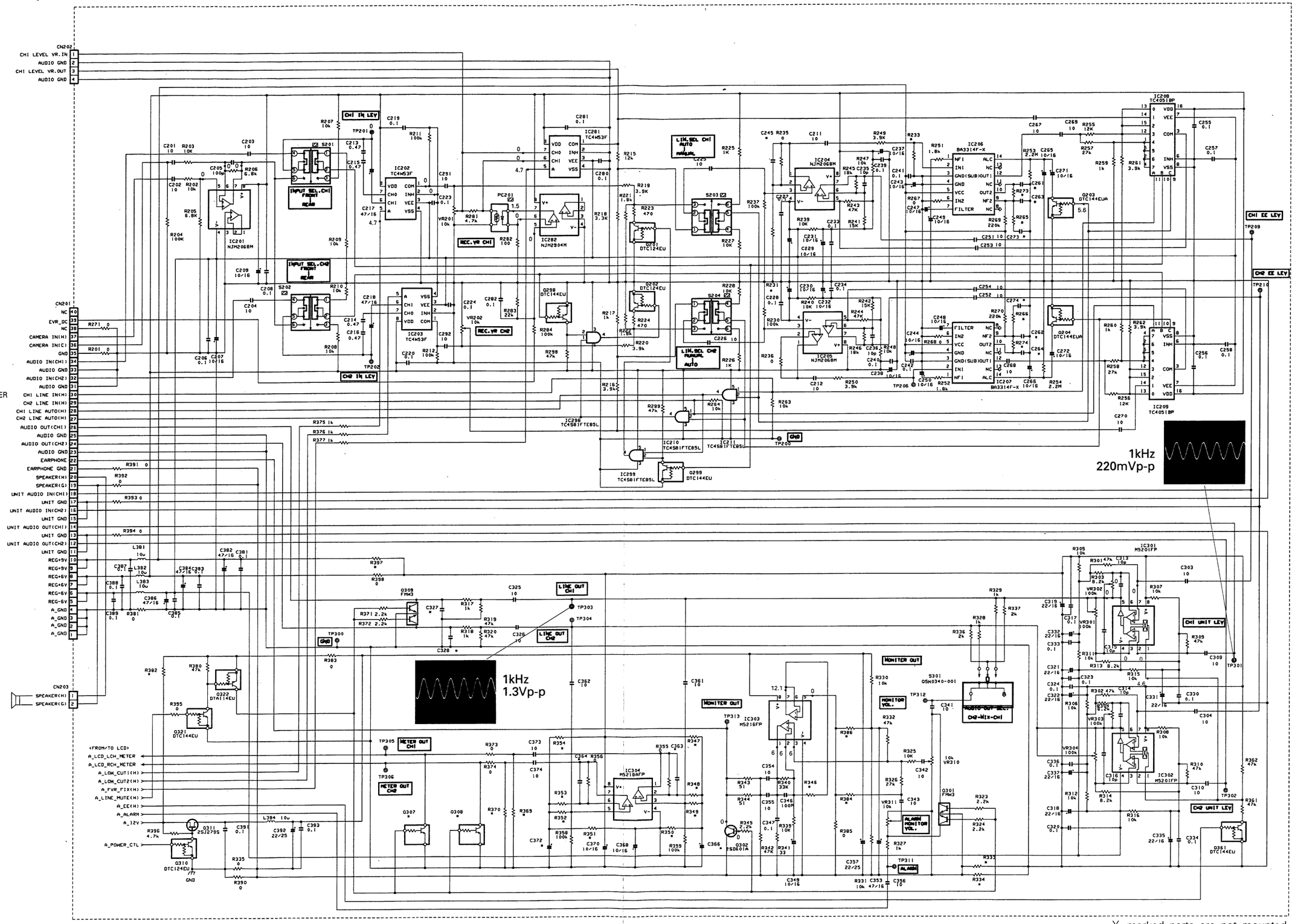

* marked parts are not mounted.

SL92237 1/2

• AUDIO/LCD SCHEMATIC DIAGRAM (2/2)32

To
31 VIDEO/SYSCON
CN402
Page 4-27

To
34 MOTHER
CN601
Page 4-36

To
35 OPE
CN1
Page 4-39

LCD CPU

LCD DRIVER

RESET

LCD

SL92237 2/2

4.21 AUDIO/LCD CIRCUIT BOARD

– SIDE A –

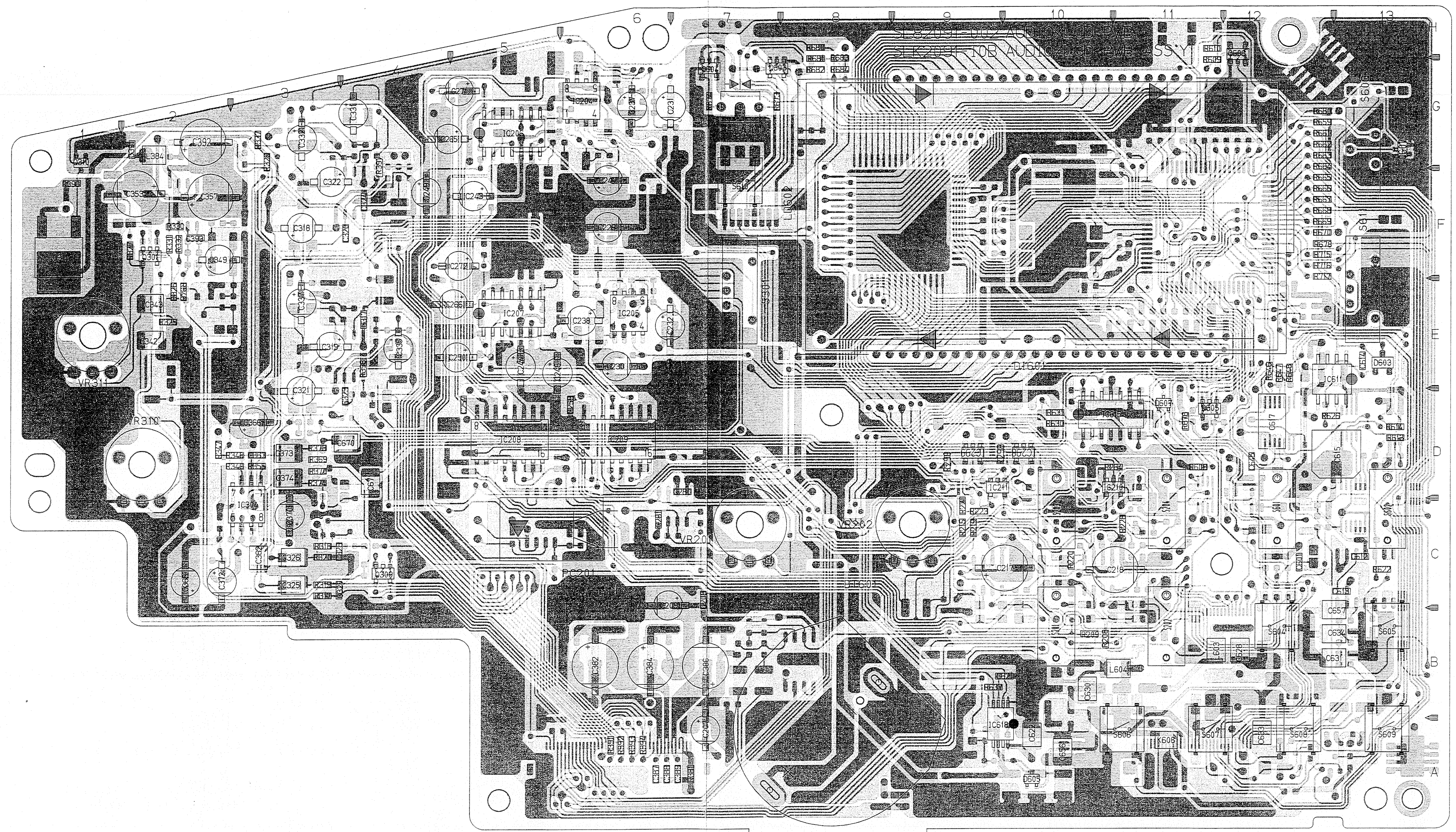

● **ADDRESS TABLE OF BOARD PARTS**

Each address may have an address error by one interval.

```
      A-1C
Side ─┘ │ └── Y axis
        └──── X axis
```

IC201	B-8B	IC601	B-11F	Q204	B-4F	Q607	A-13G	R210	B-11C	R236	B-6E
IC202	B-9C	IC602	B-9F	Q298	B-9D			R211	B-9C	R237	B-6G
IC203	B-10C	IC603	B-12D	Q299	B-9D	D601	B-13B	R212	B-10C	R239	B-6G
IC204	A-6G	IC604	B-12D	Q301	A-2F	D602	B-13B	R215	A-9C	R240	B-6E
IC205	A-6F	IC605	B-11D	Q302	B-2F	D603	A-13E	R216	B-11C	R241	B-6H
IC206	A-5G	IC607	B-13D	Q307	B-3D	D604	B-13E	R217	B-11C	R242	B-6F
IC207	A-5F	IC608	B-13D	Q308	B-3D	D605	A-10A	R218	B-10D	R243	B-6G
IC208	A-5D	IC609	B-13D	Q309	A-4C	D606	B-9A	R219	A-9C	R244	B-6F
IC209	A-6D	IC610	B-13C	Q310	A-1G	D607	A-11E	R220	A-10C	R245	B-6G
IC210	A-11D	IC611	A-12E	Q311	A-1F			R221	A-9D	R246	B-6F
IC211	A-9D	IC612	B-12D	Q321	B-4C	R201	B-6B	R222	B-11C	R247	B-6G
IC281	B-7D	IC615	A-10E	Q322	B-3C	R202	B-7B	R223	A-9D	R248	B-6F
IC282	B-5D	IC616	B-11E	Q361	B-4E	R203	B-7B	R224	B-11C	R249	B-5G
IC298	A-10D	IC618	A-10B	Q601	B-12A	R204	B-7B	R225	B-10D	R250	B-6E
IC299	A-9D	IC619	B-11E	Q602	B-13A	R205	B-7B	R226	B-11D	R251	B-5G
IC301	B-4G			Q603	A-7H	R206	B-7C	R227	B-10D	R252	B-5E
IC302	B-4E	Q201	B-9D	Q604	A-7H	R207	B-10C	R228	A-11C	R253	B-5H
IC303	B-2G	Q202	B-11D	Q605	A-11E	R208	A-10B	R230	B-6E	R254	B-5F
IC304	A-3D	Q203	B-4H	Q606	A-12H	R209	A-10B	R235	B-6G	R255	B-5G

R256	B-5E	R282	B-5C	R315	B-4G	R336	B-3G	R356	B-3C	R393	A-6A
R257	B-5G	R283	B-6C	R316	B-4E	R337	A-3G	R358	B-3D	R394	A-6A
R258	B-5E	R284	B-5C	R317	A-3C	R339	B-2F	R359	B-3D	R395	B-4C
R259	B-5E	R298	A-9D	R318	A-3C	R340	B-2F	R361	B-4E	R396	A-1G
R260	B-6E	R299	A-9D	R319	A-3C	R341	B-3F	R362	B-4E	R397	A-4G
R261	B-5D	R301	B-4G	R320	A-3C	R342	B-2F	R369	A-3D	R398	A-4E
R262	B-6D	R302	B-4F	R323	B-2F	R343	B-3F	R370	A-3D	R601	B-12C
R263	B-9D	R303	B-4G	R324	B-2F	R344	B-2F	R371	B-4C	R602	B-12C
R264	A-11D	R304	B-3F	R325	A-2E	R345	B-2F	R372	B-4C	R603	B-12C
R265	B-6G	R305	B-3G	R326	A-2F	R346	A-2F	R373	A-3D	R604	B-12C
R266	B-5F	R306	B-3F	R327	A-2F	R347	A-2D	R374	A-3D	R605	B-12C
R267	B-5G	R307	B-4G	R328	B-3D	R348	A-3D	R375	B-10C	R606	B-12C
R268	B-5E	R308	B-4E	R329	A-3G	R349	A-3D	R376	B-11C	R607	B-11D
R269	B-6G	R309	B-4G	R330	A-2F	R350	B-2D	R377	B-7D	R608	A-11D
R270	B-5E	R310	B-4E	R331	A-2F	R351	B-2C	R380	B-3C	R609	A-11H
R271	B-5B	R311	B-3G	R332	A-2F	R352	B-2C	R381	A-7A	R610	A-11H
R273	B-5G	R312	B-3F	R333	B-2G	R353	B-2C	R390	B-9A	R611	B-12A
R274	B-5F	R313	B-4G	R334	B-2G	R354	B-2C	R391	A-6A	R612	B-12A
R281	B-7C	R314	B-4E	R335	B-9A	R355	A-3D	R392	A-6A	R613	A-13D

R614	A-13D	R635	B-11E	R654	B-9F	R673	A-7G	R703	B-11G	R723	B-12E
R615	B-12E	R636	B-10E	R655	B-9F	R674	A-7G	R704	B-11G	R724	B-12F
R616	B-12E	R637	A-9B	R656	B-9F	R675	B-12A	R705	B-11G	R725	B-12F
R617	B-13B	R638	B-10A	R657	B-9F	R676	A-11D	R706	B-10F	R726	B-12A
R618	B-13B	R639	B-9B	R658	B-9F	R677	B-9G	R707	B-11E	R727	B-11E
R619	B-13B	R640	B-9A	R659	A-12G	R678	A-12F	R708	B-11E	R728	B-12E
R620	B-13C	R641	B-11F	R660	A-12G	R679	B-13A	R709	B-12E		
R621	B-13C	R642	B-11F	R661	A-12G	R680	A-8H	R710	B-11E	VR201	A-7C
R622	A-13C	R643	B-8G	R662	A-12G	R681	A-8H	R711	B-12E	VR202	A-9C
R623	B-13C	R644	B-8G	R663	A-12G	R682	A-8H	R712	B-12F	VR301	B-3F
R625	B-12E	R645	B-8G	R664	A-12G	R683	A-8H	R714	B-11G	VR302	B-3G
R626	A-12D	R646	A-12E	R665	A-12G	R684	A-8H	R715	A-12F	VR303	B-3E
R627	B-12D	R647	A-12E	R666	A-12G	R685	B-8H	R716	A-12F	VR304	B-3E
R628	B-12C	R648	A-12E	R667	A-12G	R686	B-10E	R717	A-12F	VR310	A-2D
R630	A-10D	R649	B-12G	R668	A-12F	R687	B-11E	R718	B-10F	VR311	A-1E
R631	A-10E	R650	B-12G	R669	A-12F	R688	B-10D	R719	B-12D	VR601	B-9D
R632	B-11E	R651	B-12G	R670	A-12F	R689	B-11D	R720	B-12D	VR602	B-10D
R633	B-10E	R652	B-12G	R671	B-11D	R701	B-11G	R721	B-11E		
R634	B-11E	R653	B-11G	R672	B-11D	R702	B-11G	R722	B-11E	C201	B-7B

· AUDIO/LCD CIRCUIT BOARD (FOR SERIAL No.××××0732 AND AFTER OF GY-DV500U, ××××0840 AND AFTER OF GY-DV500E)

— SIDE A —

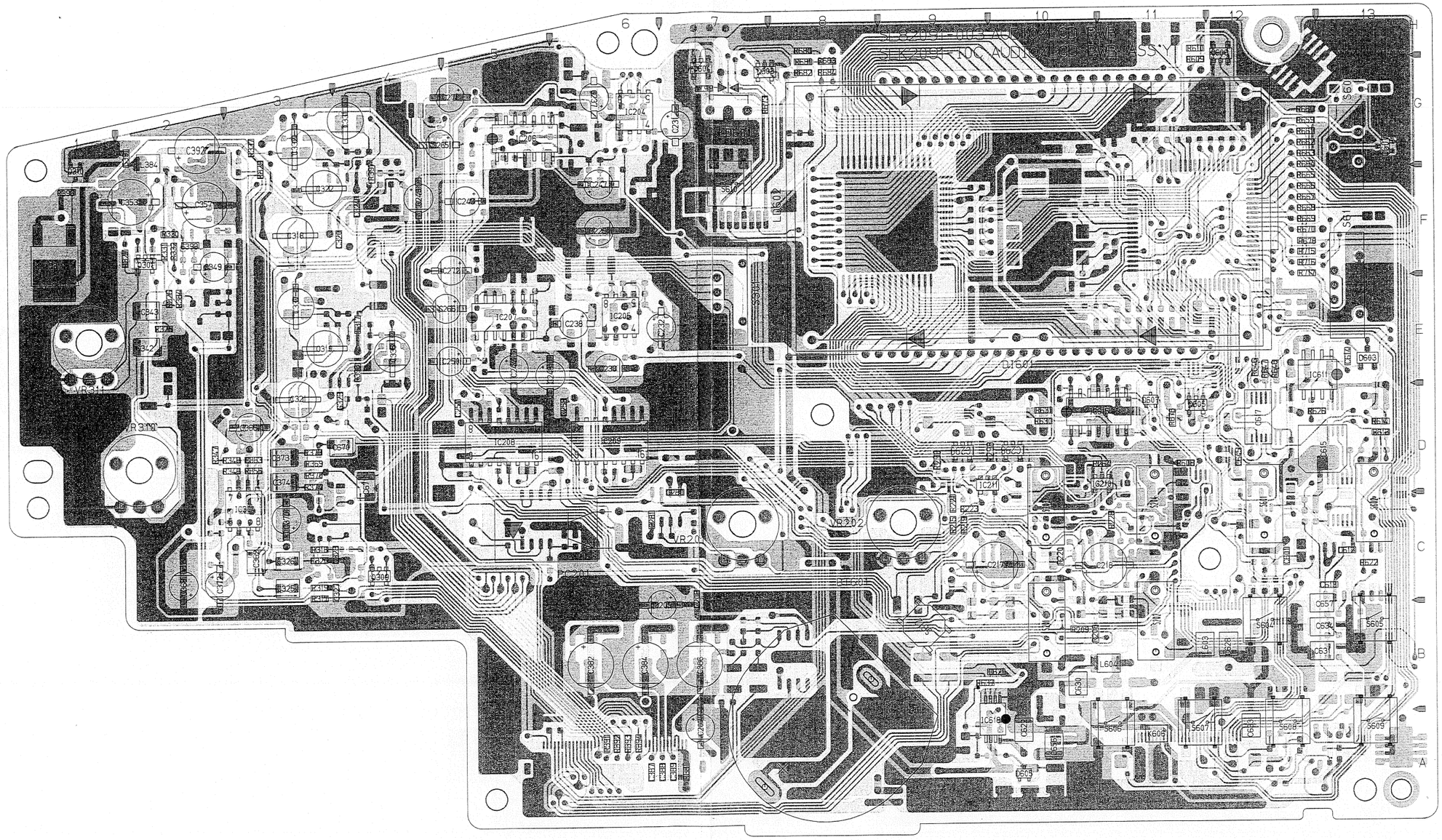

● **ADDRESS TABLE OF BOARD PARTS**

Each address may have an address error by one interval.

Side A-1C (Y axis, X axis)

IC201	B-8B	IC601	B-11F	Q204	B-4F	Q607	A-13G	R210	B-11C	R233	B-5G	R254	B-5F	R274	B-5F	R313	B-4G	R334	B-2G	R354	B-2C	R383	B-3C	R607	B-11D	R627	B-12D	R647	A-12E	R666	A-12G	R685	B-8H	R716	A-12F
IC202	B-9C	IC602	B-9F	Q298	B-9D			R211	B-9C	R235	B-6G	R255	B-5G	R281	B-7C	R314	B-4E	R335	B-9A	R355	A-3D	R384	A-2F	R608	A-11D	R628	B-12C	R648	A-12E	R667	A-12G	R686	B-10E	R717	A-12F
IC203	B-10C	IC603	B-12D	Q299	B-9D	D601	B-13B	R212	B-10C	R236	B-6E	R256	B-5E	R282	B-5C	R315	B-4G	R336	B-3G	R356	B-3C	R385	B-2G	R609	A-11H	R630	A-10D	R649	B-12G	R668	A-12F	R687	B-11E	R718	B-10F
IC204	A-6G	IC604	B-12D	Q301	A-2F	D602	B-13B	R215	A-9C	R237	B-6G	R257	B-5G	R283	B-6C	R316	B-4E	R337	A-3G	R358	B-3D	R386	B-2G	R610	A-11H	R631	A-10E	R650	B-12G	R669	A-12F	R688	B-10D	R719	B-12D
IC205	A-6F	IC605	B-11D	Q302	B-2F	D603	A-13E	R216	B-11C	R239	B-6G	R258	B-5E	R284	B-5C	R317	A-3C	R339	B-2F	R359	B-3D	R390	B-9A	R611	B-12A	R632	B-11E	R651	B-12G	R670	A-12F	R689	B-11D	R720	B-12D
IC206	A-5G	IC607	B-13D	Q307	B-3D	D604	B-13E	R217	B-11C	R240	B-6E	R259	B-5E	R298	A-9D	R318	A-3C	R340	B-2F	R361	B-4E	R391	A-6A	R612	B-12A	R633	B-10E	R652	B-12G	R671	B-11D	R701	B-11G	R721	B-11E
IC207	A-5F	IC608	B-13D	Q308	B-3D	D605	A-10A	R218	B-10D	R241	B-6H	R260	B-6E	R299	A-9D	R319	A-3C	R341	B-3F	R362	B-4E	R392	A-6A	R613	A-13D	R634	B-11E	R653	B-11G	R672	B-11D	R702	B-11G	R722	B-11E
IC208	A-5D	IC609	B-13D	Q309	A-4C	D606	B-9A	R219	A-9C	R242	B-6F	R261	B-5D	R301	B-4G	R320	A-3C	R342	B-2F	R369	A-3D	R393	A-6A	R614	A-13D	R635	B-11E	R654	B-9F	R673	A-7G	R703	B-11G	R723	B-12E
IC209	A-6D	IC610	B-13C	Q310	A-1G	D607	A-11E	R220	A-10C	R243	B-6G	R262	B-6D	R302	B-4F	R323	B-2F	R343	B-3F	R370	A-3D	R394	A-6A	R615	B-12E	R636	B-10E	R655	B-9F	R674	A-7H	R704	B-11G	R724	B-12F
IC210	A-11D	IC611	A-12E	Q311	A-1F			R221	A-9D	R244	B-6F	R263	B-9D	R303	B-4G	R324	B-2F	R344	B-2F	R371	B-4C	R395	B-4C	R616	B-12E	R637	A-9B	R656	B-9F	R675	B-12A	R705	B-11G	R725	B-12F
IC211	A-9D	IC612	B-12D	Q321	B-4C	R201	B-6B	R222	B-11C	R245	B-6G	R264	A-11D	R304	B-3F	R325	A-2E	R345	B-2F	R372	B-4C	R396	A-1G	R617	B-13B	R638	B-10A	R657	B-9F	R676	A-11D	R706	B-10F	R726	B-12A
IC281	B-7D	IC615	A-10E	Q322	B-3C	R202	B-7B	R223	A-9D	R246	B-6F	R265	B-6G	R305	B-3G	R326	A-2F	R346	B-2F	R373	A-3D	R397	A-4G	R618	B-13B	R639	B-9B	R658	B-9F	R677	B-9G	R707	B-11E	R727	B-11E
IC282	B-5D	IC616	B-11E	Q361	B-4E	R203	B-7B	R224	B-11C	R247	B-6G	R266	B-5F	R306	B-3F	R327	A-2F	R347	A-2D	R374	A-3D	R398	A-4E	R619	B-13B	R640	B-9A	R659	A-12G	R678	A-12F	R708	B-11E	R728	B-12E
IC298	A-10D	IC618	A-10B	Q601	B-12A	R204	B-7B	R225	B-10D	R248	B-6F	R267	B-6G	R307	B-4G	R328	B-3D	R348	A-3D	R375	B-10C	R601	B-12C	R620	B-13C	R641	B-11F	R660	A-12G	R679	B-13A	R709	B-12E	R729	B-8D
IC299	A-9D	IC619	B-11E	Q602	B-13A	R205	B-7B	R226	B-11D	R249	B-5G	R268	B-5E	R308	B-4E	R329	A-3G	R349	A-3D	R376	B-11C	R602	B-12C	R621	B-13C	R642	B-11F	R661	A-12G	R680	A-8H	R710	B-11E		
IC301	B-4G			Q603	A-7H	R206	B-7C	R227	B-10D	R250	B-6E	R269	B-6G	R309	B-4G	R330	A-2F	R350	B-2D	R377	B-7D	R603	B-12C	R622	A-13C	R643	B-8G	R662	A-12G	R681	A-8H	R711	B-12E	VR201	A-7C
IC302	B-4E	Q201	B-9D	Q604	A-7H	R207	B-10C	R228	A-11C	R251	B-5G	R270	B-5E	R310	B-4E	R331	A-2F	R351	B-2C	R380	B-3C	R604	B-12C	R623	B-13C	R644	B-8G	R663	A-12G	R682	A-8H	R712	B-12F	VR202	A-9C
IC303	B-2G	Q202	B-11D	Q605	A-11E	R208	A-10B	R230	B-6E	R252	B-5E	R271	B-5B	R311	B-3G	R332	A-2F	R352	B-2C	R381	A-7A	R605	B-12C	R625	B-12E	R645	B-8G	R664	A-12G	R683	A-8H	R714	B-11G	VR301	B-3F
IC304	A-3D	Q203	B-4G	Q606	A-12H	R209	A-10B	R231	B-6G	R253	B-5H	R273	B-5G	R312	B-3F	R333	B-2G	R353	B-2C	R382	B-3C	R606	B-12C	R626	A-12D	R646	A-12E	R665	A-12G	R684	A-8H	R715	A-12F	VR302	B-3G

4-32-2

– SIDE B –

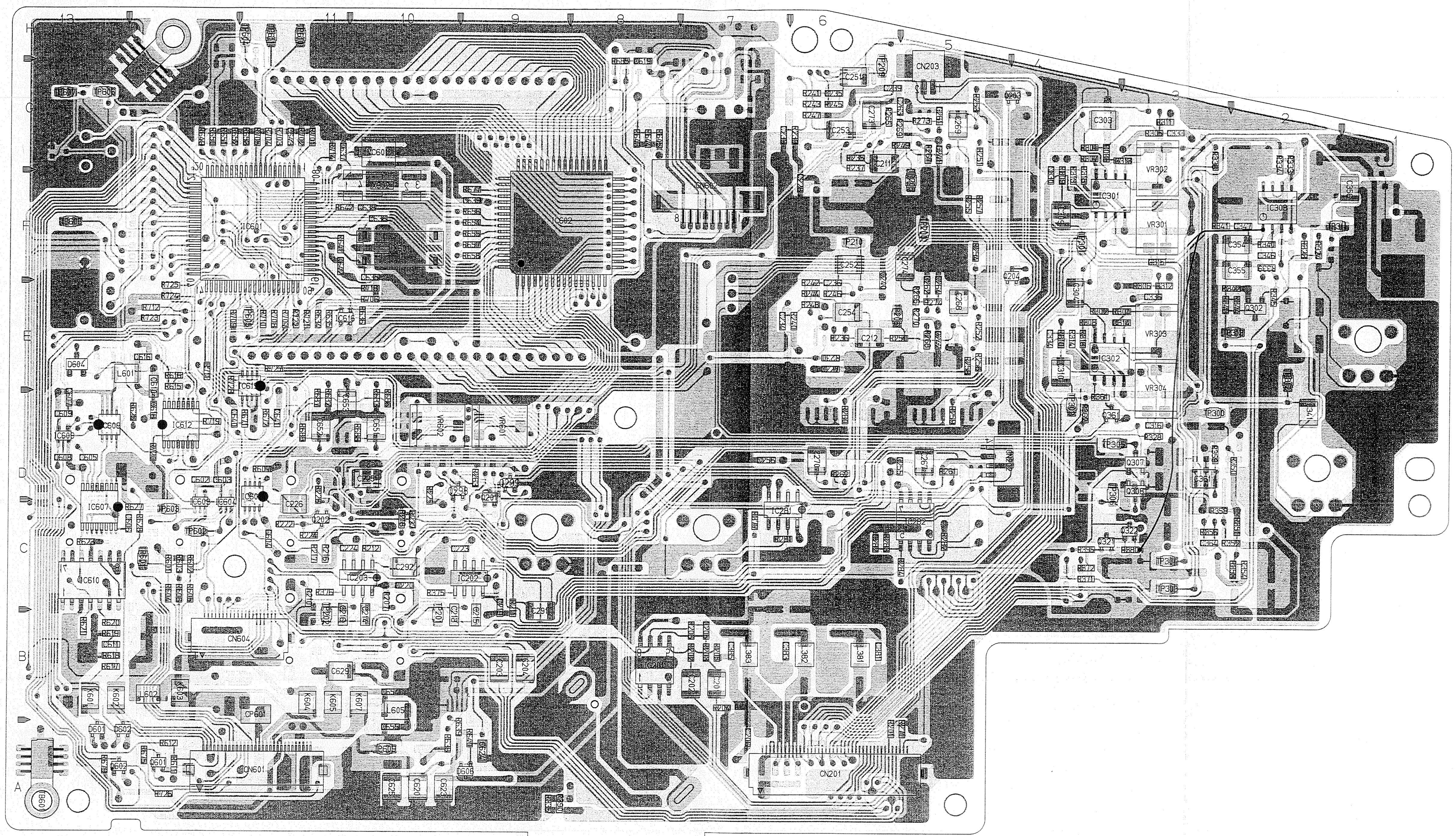

C202	B-7B	C224	B-10C	C243	A-5G	C266	A-5F	C314	B-3E	C334	B-4E	C366	A-3D	C602	B-12D	C621	A-10B	C643	B-11G	L602	B-12B	TP311	B-2F	CN202	B-5D	S607	A-11B	BT601	A-7A
C203	B-9B	C225	B-10D	C244	A-5E	C267	B-5D	C315	B-3F	C335	A-4E	C368	A-2C	C603	B-12D	C622	A-10A	C645	A-12D	L603	A-11B	TP312	B-2E	CN203	B-5H	S608	A-12B		
C204	B-9B	C226	B-11D	C247	A-6G	C268	B-5F	C316	B-3D	C336	B-3F	C370	A-3D	C604	B-11C	C623	B-10A	C651	B-10D	L604	A-11B	TP313	B-2E	CN601	B-11A	S609	A-13B	DI601	A-10F
C205	B-7C	C227	B-6E	C248	A-5E	C269	B-5G	C317	A-4E	C337	A-3F	C372	A-2C	C605	B-13D	C624	B-9A	C652	B-11D	L605	B-10B	TP601	B-12C	CN602	B-7G	S610	A-7G		
C206	B-7A	C228	B-6G	C249	A-4G	C270	B-6D	C318	A-3F	C341	B-2E	C373	A-3D	C606	B-12C	C625	B-10A	C653	B-11E			TP602	B-12C	CN604	B-11B	S611	A-13F	PC201	A-5C
C207	A-7B	C229	A-6F	C250	A-5E	C271	A-5H	C319	A-3E	C342	A-2E	C374	A-3D	C607	B-13E	C628	A-12B	C654	B-10B	TP200	B-5F	TP603	B-12D						
C208	A-7C	C230	A-6E	C251	B-6H	C272	A-5F	C320	A-4F	C343	A-2F	C381	B-6B	C608	B-13D	C629	B-11B	C655	B-10B	TP201	B-10C	TP604	B-11H	CP601	B-11B	X601	B-10F		
C209	A-6C	C231	A-7G	C252	B-6F	C273	B-6G	C321	A-3E	C346	B-2F	C382	A-6B	C609	B-13E	C630	A-10B	C656	A-10A	TP202	B-11C	TP605	B-11E			X602	B-10G		
C211	B-6G	C232	A-7E	C253	B-6G	C274	B-5F	C322	A-3G	C347	B-2F	C383	B-7B	C610	B-12E	C631	A-13B	C657	A-13C	TP205	B-5G	TP606	B-13H	S201	A-10C				
C212	B-6E	C233	B-7G	C254	B-6F	C280	A-7D	C323	A-4E	C349	A-2F	C384	A-6B	C611	B-13B	C633	A-12A	C670	A-4D	TP206	B-6F	TP607	B-13H	S202	A-11C	K601	B-13B		
C213	B-10C	C234	B-7E	C255	B-5D	C281	A-6C	C324	A-4G	C353	A-2G	C385	B-7B	C612	A-13C	C634	A-13B	C671	A-4D	TP209	B-6H	TP608	B-13F	S203	A-10D	K602	B-13B		
C214	B-10C	C235	B-6H	C256	B-7D	C282	B-6C	C325	A-3C	C354	B-2F	C386	A-7B	C613	A-13C	C635	B-10F			TP210	B-6F	TP609	B-10A	S204	A-11D	K603	B-12B		
C215	B-9C	C236	B-6F	C257	A-5E	C291	B-9C	C326	A-3C	C355	B-2F	C387	A-6A	C614	A-13E	C636	B-10F	VC601	B-10G	TP300	B-3E	TP610	B-11H	S301	A-7F	K604	B-11B		
C216	B-11C	C237	A-6G	C258	A-6E	C292	B-10C	C327	A-4C	C356	B-1G	C388	A-6A	C615	A-13D	C637	B-11G			TP301	B-4F	TP611	B-11H	S601	A-12D	K605	B-11B		
C217	A-10C	C238	A-6E	C261	B-5G	C303	B-4G	C328	A-4C	C357	A-2G	C389	A-7A	C616	B-12E	C638	B-10F	L381	B-6B	TP302	B-4E			S602	A-13D	K606	A-11A		
C218	A-11C	C239	B-6H	C262	B-5F	C304	B-4F	C330	B-4G	C361	B-3D	C391	A-2G	C617	A-12D	C639	B-9G	L382	B-6B	TP303	B-3C	TB601	B-13A	S603	A-13G	K607	B-10B		
C219	B-9C	C240	B-6F	C263	B-6G	C309	B-4F	C331	A-4G	C362	A-3C	C392	A-2G	C618	B-12E	C640	B-12D	L383	B-7B	TP304	B-3C	TB602	B-12H	S604	A-12C				
C220	B-10C	C241	B-5G	C264	B-5F	C310	B-4E	C332	A-3G	C363	A-3D	C393	A-2F	C619	B-8H	C641	B-11D	L384	A-2G	TP305	B-4D			S605	A-13C	LD601	A-7G		
C223	B-9C	C242	B-5E	C265	A-4G	C313	B-3G	C333	B-3G	C364	B-3C	C601	A-12C	C620	B-10A	C642	B-11F	L601	B-13E	TP306	B-4D	CN201	B-6A	S606	A-11B	LD602	A-10F		

– SIDE B –

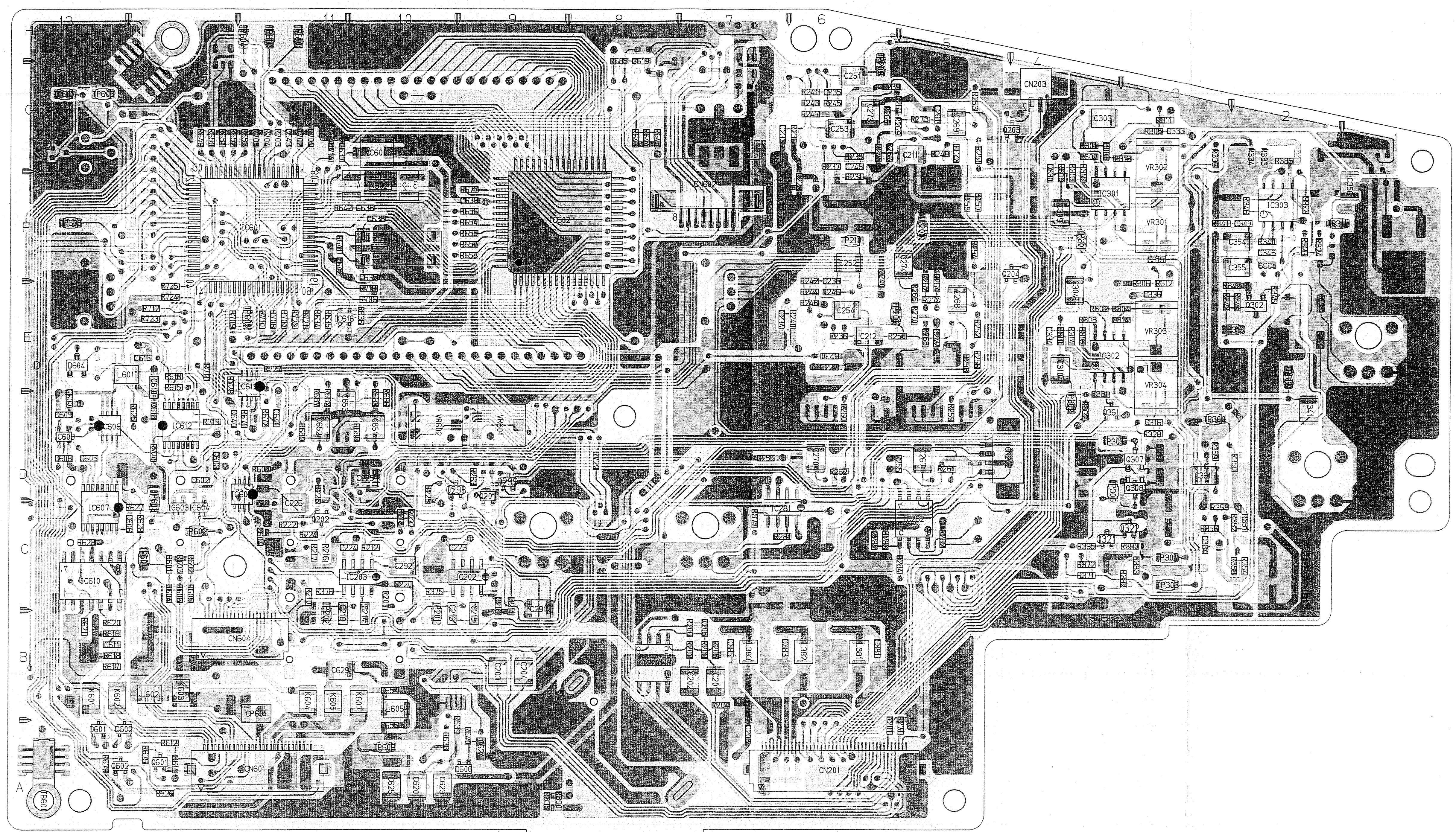

VR303	B-3E	C214	B-10C	C235	B-6H	C255	B-5D	C281	A-6C	C324	A-4G	C353	A-2G	C385	B-7B	C612	A-13C	C634	A-13B	C671	A-4D	TP210	B-6F	TP609	B-10A	S204	A-11D	K602	B-13B
VR304	B-3E	C215	B-9C	C236	B-6F	C256	B-7D	C282	B-6C	C325	A-3C	C354	B-2F	C386	A-7B	C613	A-13C	C635	B-10F			TP300	B-3D	TP610	B-11H	S301	A-7F	K603	B-12B
VR310	A-2D	C216	B-11C	C237	A-6H	C257	A-5E	C291	B-9C	C326	A-3C	C355	B-2F	C387	A-6A	C614	A-13E	C636	B-10F	VC601	B-10G	TP301	B-4F	TP611	B-11H	S601	A-12D	K604	B-11B
VR311	A-1E	C217	A-10C	C238	A-6E	C258	A-6E	C292	B-10C	C327	A-4C	C356	B-1G	C388	A-6A	C615	A-13D	C637	B-11G			TP302	B-4E			S602	A-13D	K605	B-11B
VR601	B-9D	C218	A-11C	C239	B-6H	C261	B-5G	C303	B-4G	C328	A-4C	C357	A-2G	C389	A-7A	C616	B-12E	C638	B-10F	L381	B-6B	TP303	B-3C	TB601	B-13A	S603	A-13G	K606	A-11A
VR602	B-10D	C219	B-9C	C240	B-6F	C262	B-5F	C304	B-4F	C330	B-4G	C361	B-3D	C391	A-2G	C617	A-12D	C639	B-9G	L382	B-6B	TP304	B-3C	TB602	B-12H	S604	A-12C	K607	B-10B
		C220	B-10C	C241	B-6G	C263	B-6G	C309	B-4F	C331	A-4G	C362	A-3C	C392	A-2G	C618	B-12E	C640	B-12D	L383	B-7B	TP305	B-4D			S605	A-13C		
C201	B-7B	C223	B-9C	C242	B-5E	C264	B-5F	C310	B-4E	C332	A-3G	C363	A-3D	C393	A-2F	C619	B-8H	C641	B-11D	L384	A-2G	TP306	B-4D	CN201	B-6A	S606	A-11B	LD601	A-7G
C202	B-7B	C224	B-10C	C243	A-5G	C265	A-4G	C313	B-3G	C333	B-3G	C364	B-3C	C601	A-12C	C620	B-10A	C642	B-11F	L601	B-13E	TP311	B-2F	CN202	B-5D	S607	A-11B	LD602	A-10F
C203	B-9B	C225	B-10D	C244	A-5E	C266	A-5F	C314	B-3E	C334	B-4E	C366	A-3D	C602	B-12D	C621	A-10B	C643	B-11G	L602	B-12B	TP312	B-2E	CN203	B-4H	S608	A-12B		
C204	B-9B	C226	B-11D	C245	B-6G	C267	B-5D	C315	B-3F	C335	A-4E	C368	A-2C	C603	B-12D	C622	A-10A	C645	A-12D	L603	A-11B	TP313	B-2E	CN601	B-11A	S609	A-13B	BT601	A-7A
C205	B-7C	C227	B-6E	C247	A-6G	C268	B-5F	C316	B-3D	C336	B-3F	C370	A-3D	C604	B-11C	C623	B-10A	C651	B-10D	L604	A-11B	TP601	B-12C	CN602	B-7G	S610	A-7G		
C206	B-7A	C228	B-6G	C248	A-5E	C269	B-5G	C317	A-4E	C337	A-3F	C372	A-2C	C605	B-13D	C624	B-9A	C652	B-11D	L605	B-10B	TP602	B-12C	CN604	B-11B	S611	A-13F	DI601	A-10F
C207	A-7B	C229	A-6F	C249	A-4G	C270	B-6D	C318	A-3F	C341	B-2E	C373	A-3D	C606	B-12C	C625	B-10A	C653	B-11E			TP603	B-12D			S612	A-9B		
C208	A-7C	C230	A-6E	C250	A-5E	C271	A-5H	C319	A-3E	C342	A-2E	C374	A-3D	C607	B-13E	C628	A-12B	C654	B-10B	TP200	B-5F	TP604	B-11H	CP601	B-11B			PC201	A-5C
C209	A-6C	C231	A-7G	C251	B-6H	C272	A-5F	C320	A-4F	C343	A-2F	C381	B-6B	C608	B-13D	C629	B-11B	C655	B-10B	TP201	B-10C	TP605	B-11E			X601	B-10F		
C211	B-5G	C232	A-7E	C252	B-6F	C273	B-6G	C321	A-3E	C346	B-2F	C382	A-6B	C609	B-13E	C630	A-10B	C656	A-10A	TP202	B-11C	TP606	B-13H	S201	A-10C	X602	B-10G		
C212	B-6E	C233	B-7G	C253	B-6G	C274	B-5F	C322	A-3G	C347	B-2F	C383	B-7B	C610	B-12E	C631	A-13B	C657	A-13C	TP206	B-6F	TP607	B-13H	S202	A-11C				
C213	B-10C	C234	B-7E	C254	B-6F	C280	A-7D	C323	A-4E	C349	A-2F	C384	A-6B	C611	B-13B	C633	A-12A	C670	A-4D	TP209	B-6H	TP608	B-13F	S203	A-10D	K601	B-13B		

4.22 REG(REGulater) SCHEMATIC DIAGRAM 33

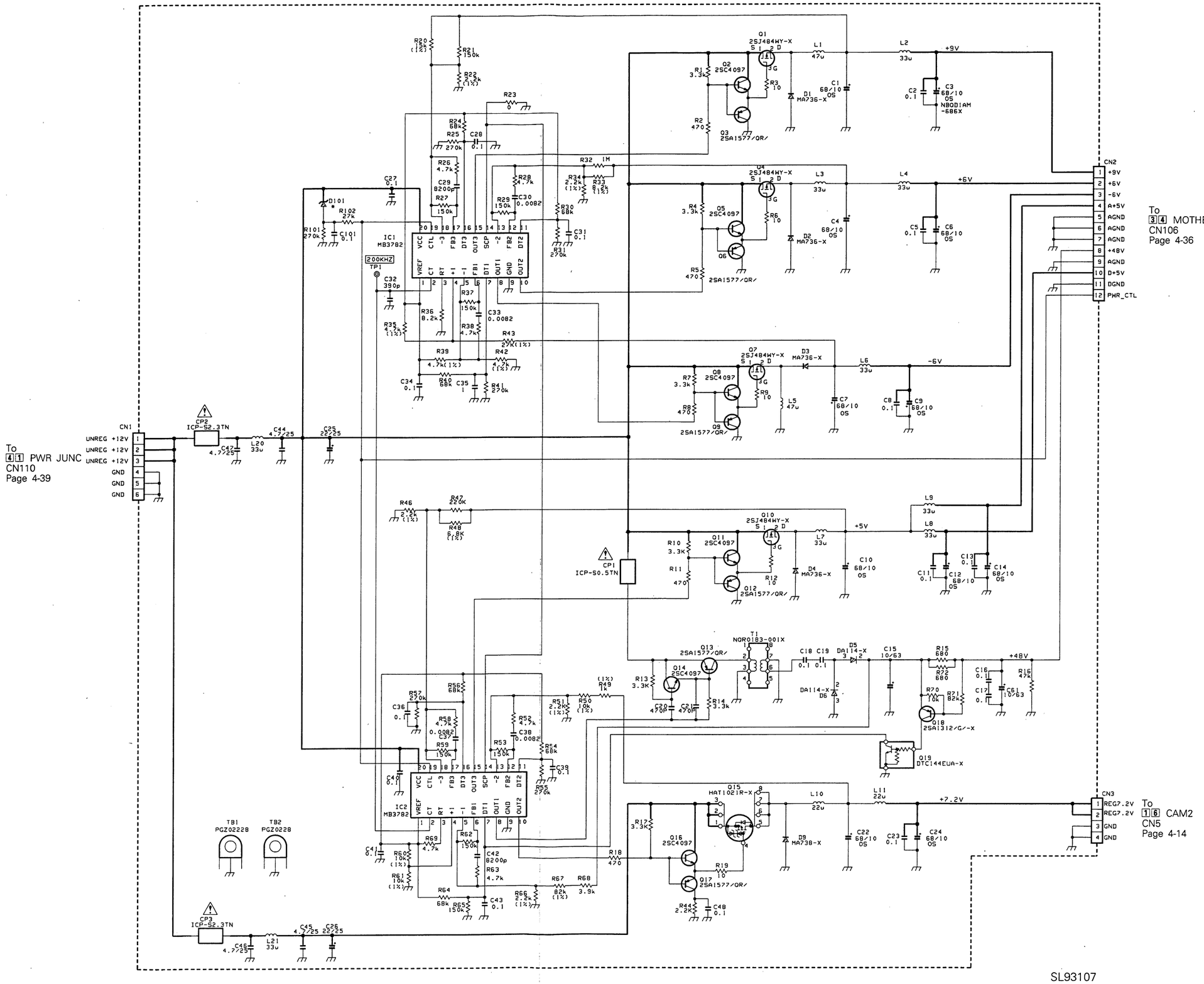

4.23 REG CIRCUIT BOARD

– SIDE A –

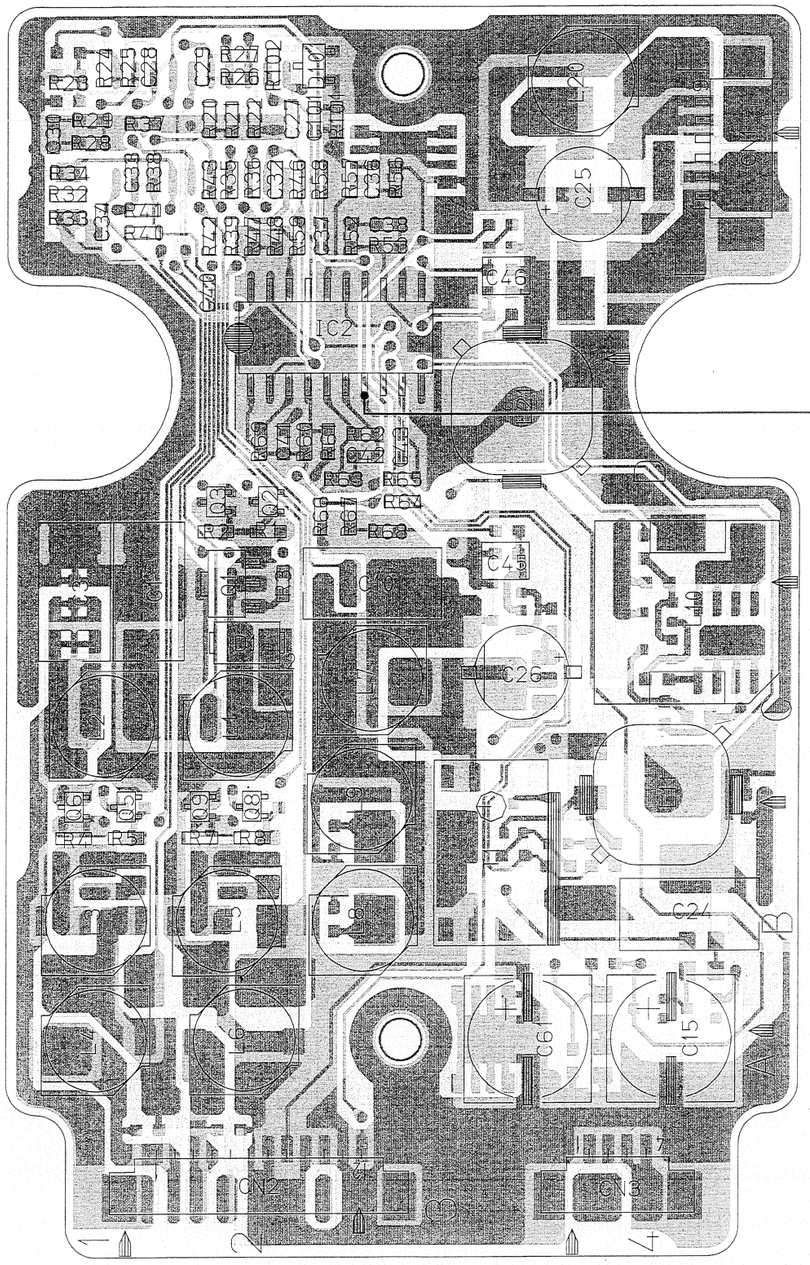

– SIDE B –

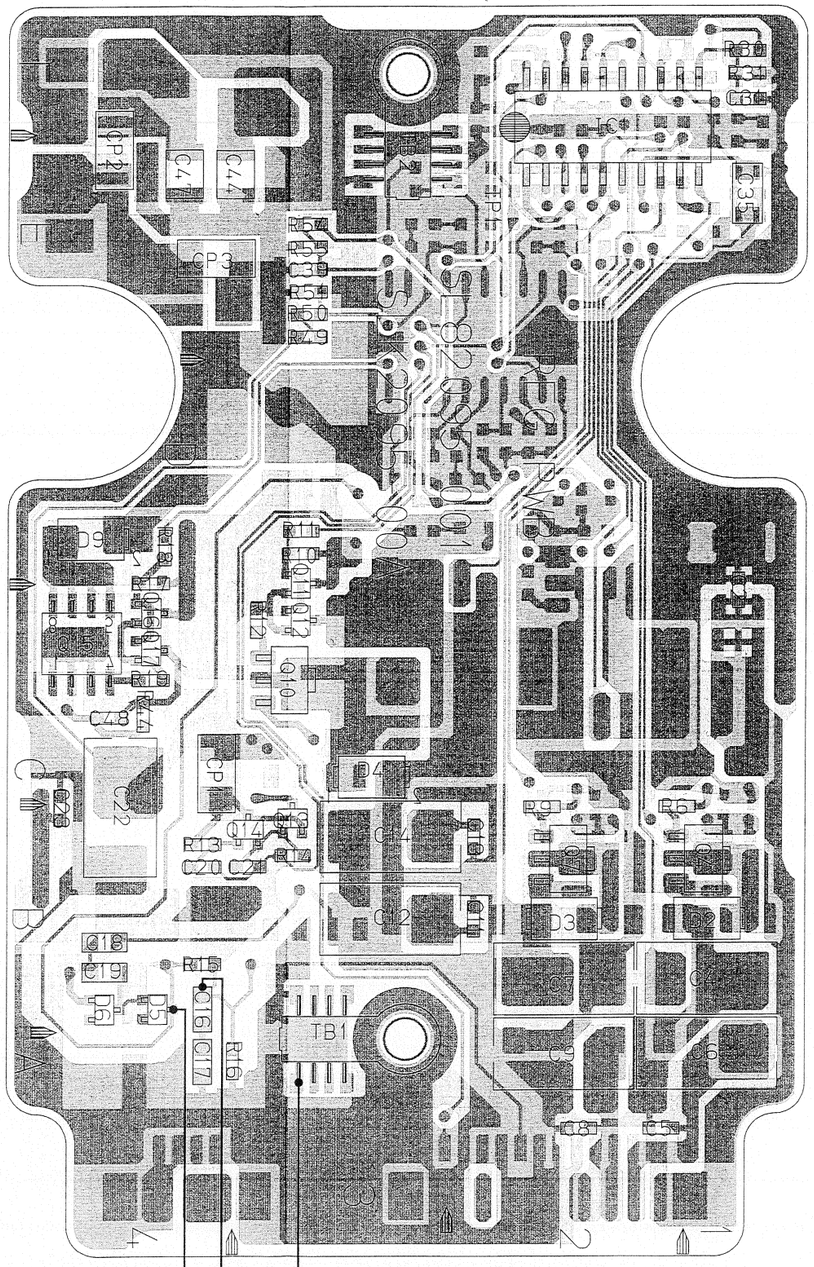

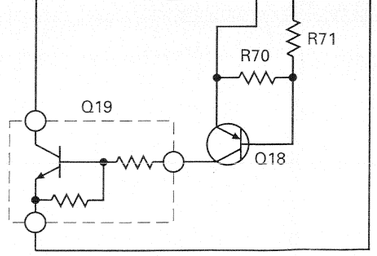

● **ADDRESS TABLE OF BOARD PARTS**
Each address may have an address error by one interval.

A-1C
Side — Y axis
X axis

IC1	B-1F	R24	A-1F	C6	B-1A	L8	A-2B
IC2	A-2E	R25	A-1F	C7	B-2B	L9	A-2C
		R26	A-2F	C8	B-1A	L10	A-4D
Q1	A-1D	R27	A-2F	C9	B-2A	L11	A-4C
Q2	A-2D	R28	A-1F	C10	A-2D	L20	A-3F
Q3	A-1D	R29	A-1F	C11	B-2B	L21	A-3E
Q4	B-1B	R30	B-1F	C12	B-3B		
Q5	A-1C	R31	B-1F	C13	B-2C	TP1	B-2F
Q6	A-1C	R32	A-1F	C14	B-3C		
Q7	B-2B	R33	A-1F	C15	A-4B	T1	A-3B
Q8	A-2C	R34	A-1F	C16	B-3B		
Q9	A-1C	R35	A-1F	C17	B-3A	CP1	B-3C
Q10	B-3C	R36	A-2F	C18	B-4B	CP2	B-4F
Q11	B-3D	R37	A-1F	C19	B-4B	CP3	B-3E
Q12	B-3D	R38	A-1F	C20	B-3B		
Q13	B-3C	R39	A-1F	C21	B-3B	CN1	A-4F
Q14	B-3C	R40	A-1F	C22	B-4C	CN2	A-2A
Q15	B-4D	R41	A-1F	C23	B-4C	CN3	A-4A
Q16	B-4D	R42	A-1F	C24	A-4B		
Q17	B-4C	R43	A-1F	C25	A-3F	TB1	B-2B
		R44	B-4C	C26	A-3C	TB2	B-2F
D1	A-2D	R46	A-2F	C27	A-2F		
D2	B-1B	R47	A-2F	C28	A-1F		
D3	B-2B	R48	A-2F	C29	A-1F		
D4	B-3C	R49	B-3E	C30	A-1F		
D5	B-4B	R50	B-3E	C31	B-1F		
D6	B-4B	R51	B-3E	C32	A-2F		
D9	B-4D	R52	A-2F	C33	A-1F		
D101	A-2F	R53	A-2E	C34	A-1F		
		R54	B-3F	C35	B-1F		
R1	A-2D	R55	B-3E	C36	A-2F		
R2	A-1D	R56	A-2F	C37	A-2F		
R3	A-2D	R57	A-2F	C38	A-2F		
R4	A-1C	R58	A-2F	C39	B-3E		
R5	A-1C	R59	A-2F	C40	A-1E		
R6	B-1C	R60	A-2E	C41	A-2E		
R7	A-1C	R61	A-2E	C42	A-2D		
R8	A-2C	R62	A-2E	C43	A-2E		
R9	B-2C	R63	A-2D	C44	B-3F		
R10	B-3D	R64	A-2D	C45	A-3D		
R11	B-3D	R65	A-2D	C46	A-3E		
R12	B-3D	R66	A-2D	C47	B-4F		
R13	B-3C	R67	A-2D	C48	B-4C		
R14	B-3B	R68	A-2D	C61	A-3B		
R15	B-3B	R69	A-2E	C101	A-2F		
R16	B-3A	R101	A-2F				
R17	B-4D	R102	A-2F	L1	A-2C		
R18	B-4D			L2	A-1C		
R19	B-4C	C1	A-1D	L3	A-1B		
R20	A-1F	C2	B-1D	L4	A-1B		
R21	A-1F	C3	A-1D	L5	A-1B		
R22	A-2F	C4	B-1B	L6	A-2B		
R23	A-1F	C5	B-1A	L7	A-2C		

IDE-V27525 / DRUCK: 33

4.24 MOTHER SCHEMATIC DIAGRAM 3 4

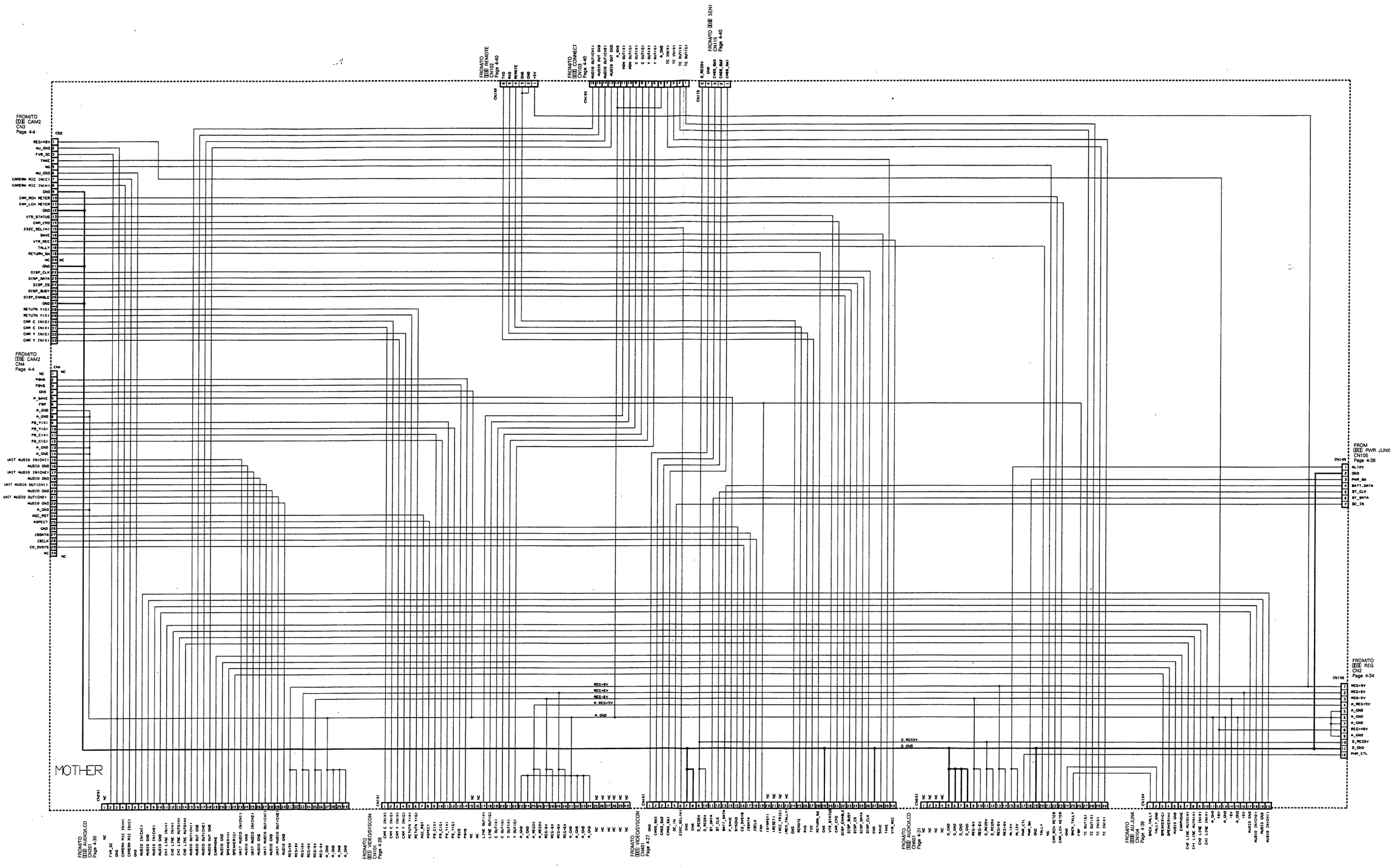

SL92238

4.25 MOTHER, AU JUNK CIRCUIT BOARD

· MOTHER

— SIDE A —

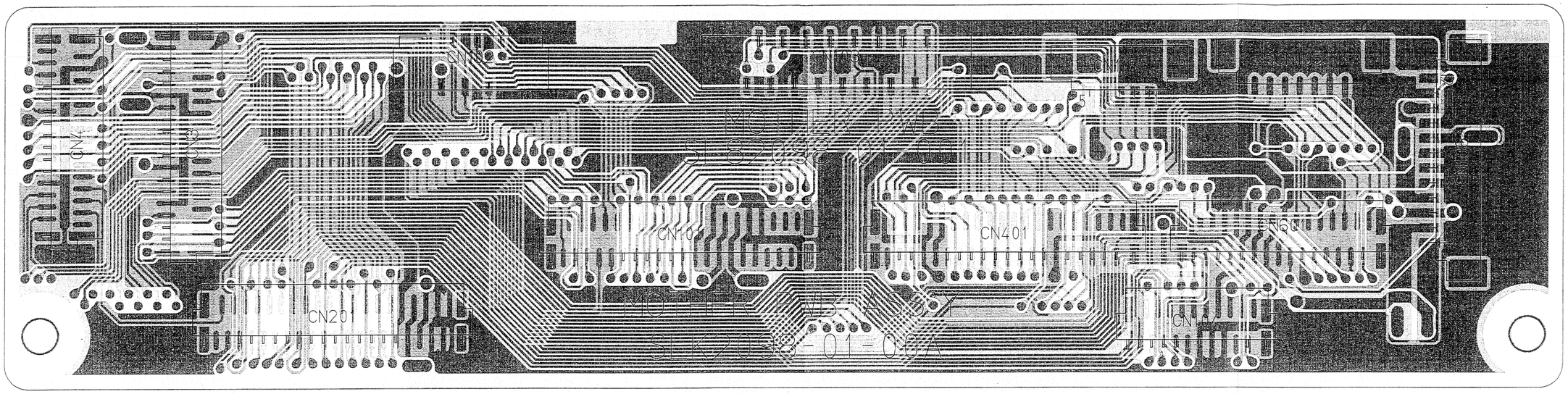

· AU JUNK

— SIDE A —

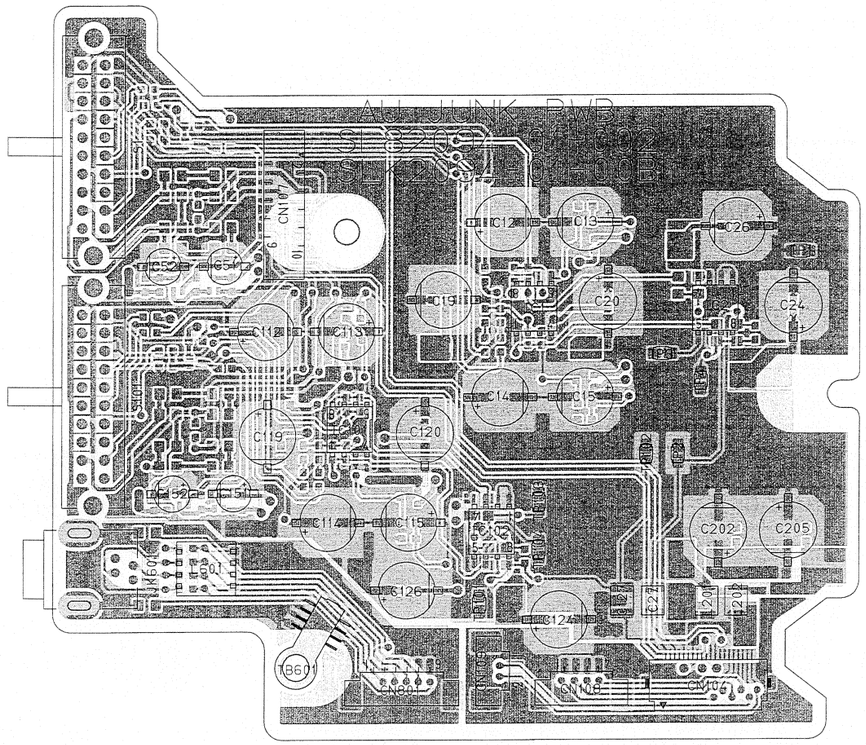

— SIDE B —

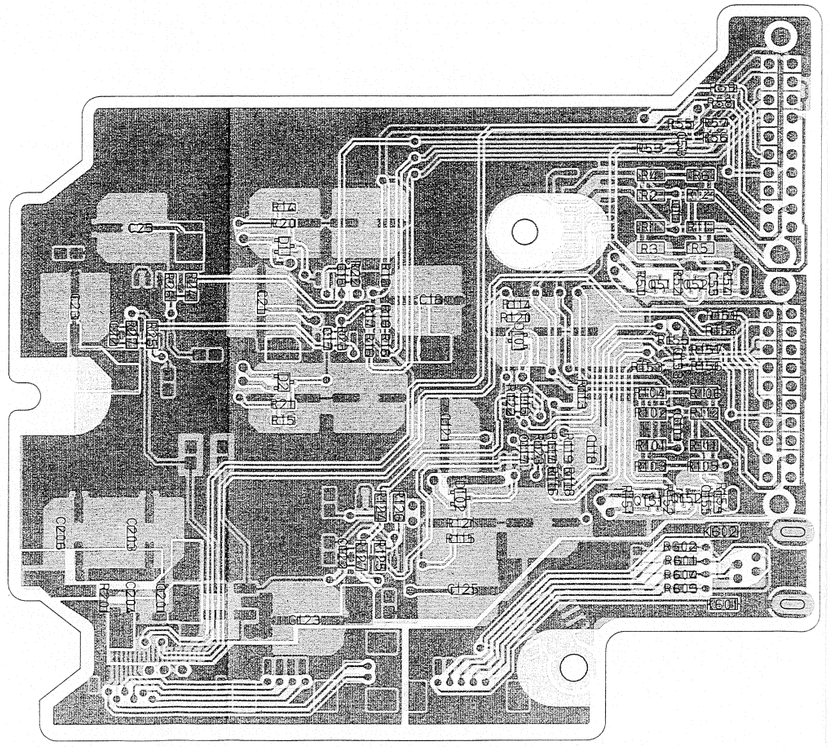

4.26 AU JUNK SCHEMATIC DIAGRAM 39

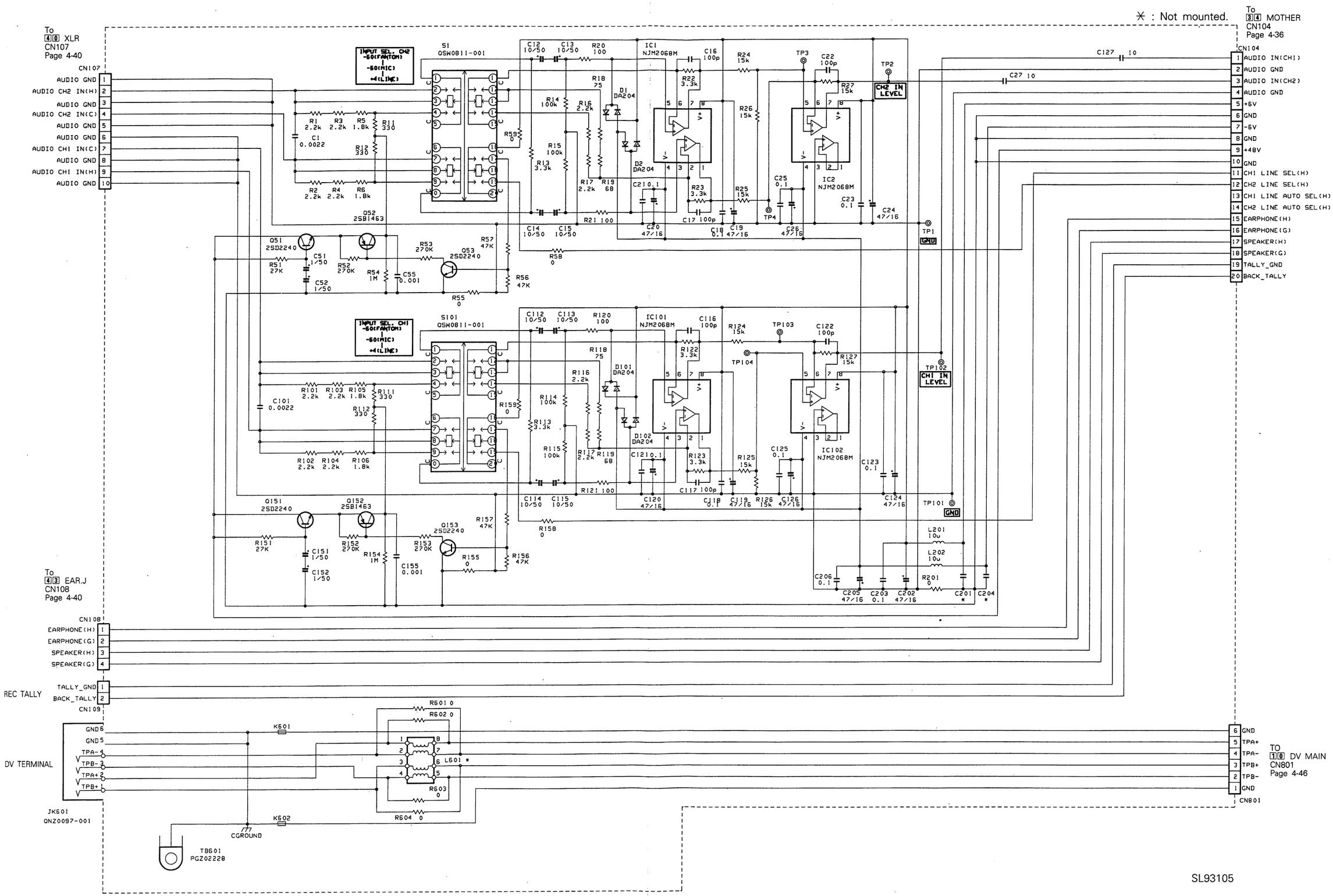

4.27 PWR JUNC, OPE(OPEration) SCHEMATIC DIAGRAM 41/35

• PWR JUNC 41

* : Not mounted.

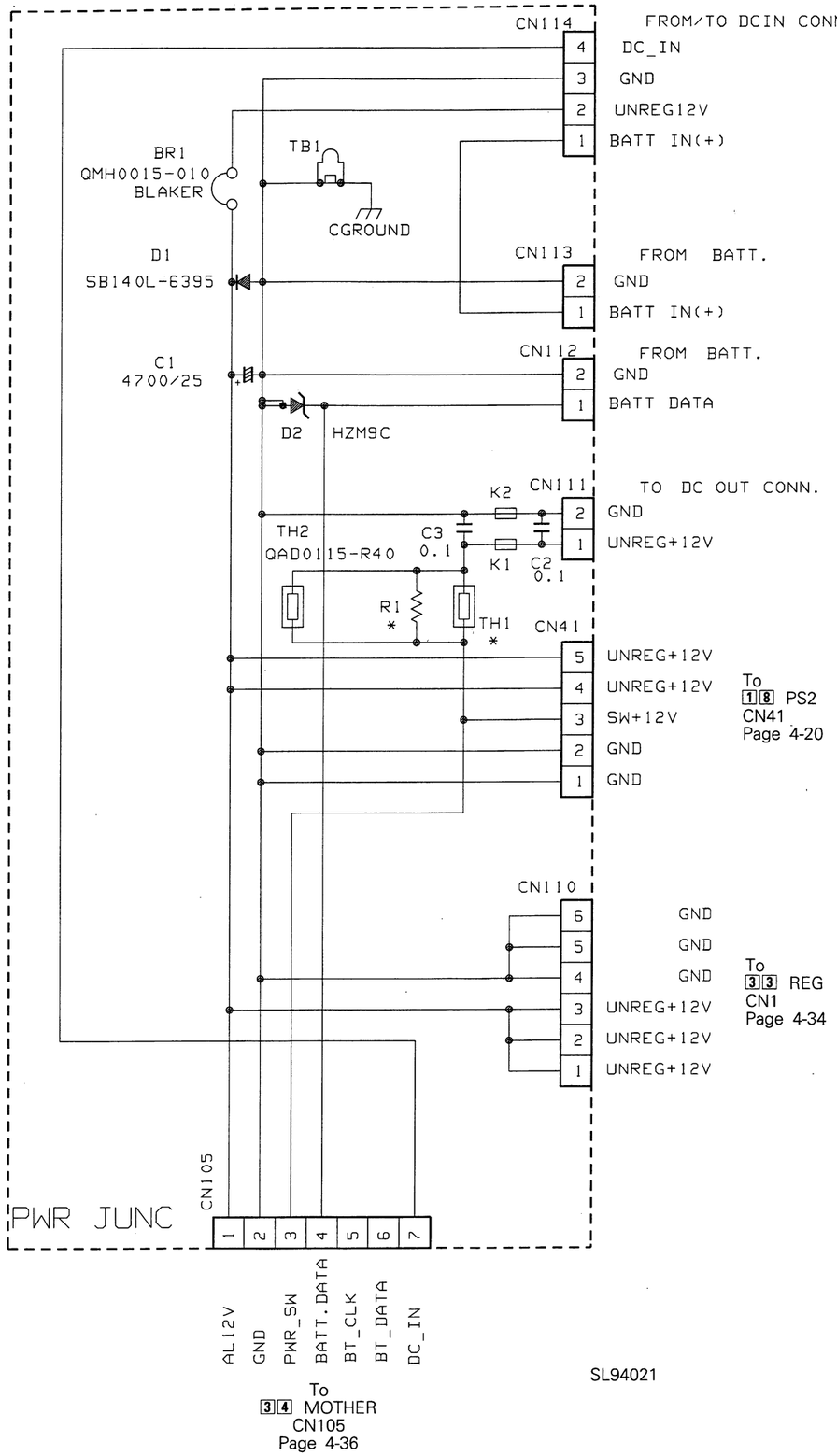

SL94021

• OPE 35

* : Not mounted.

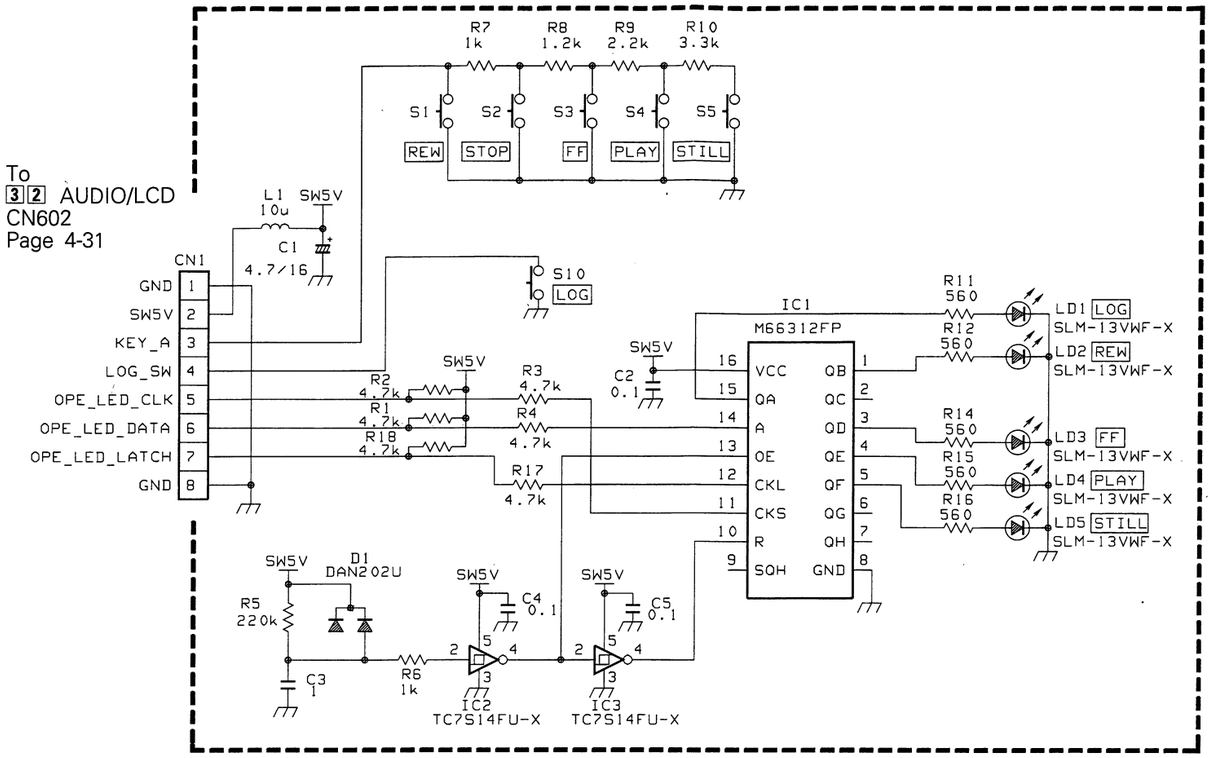

SL94022

4-39

4.28 CONNECT, REMOTE, XLR, EAR.J, SEN1, SENS2 SCHEMATIC DIAGRAM [42]/[38]/[40]/[43]/[36]/[37]

· CONNECT [42]

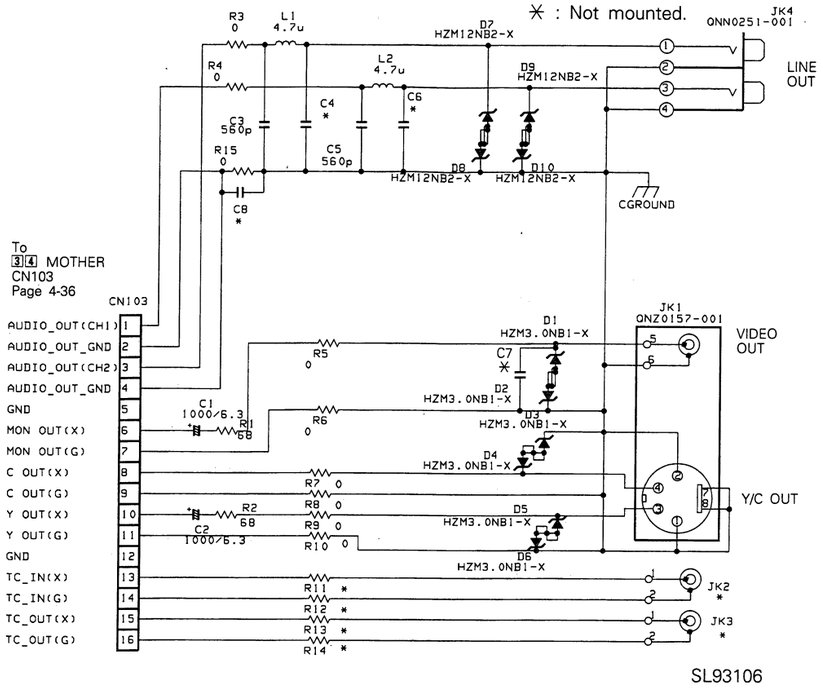

SL93106

· REMOTE [38]

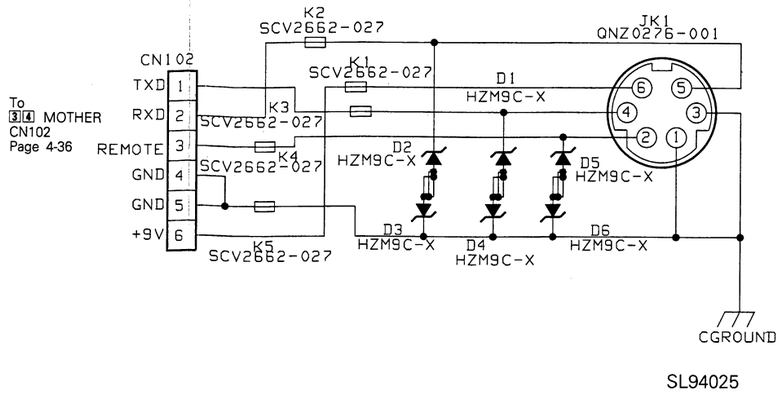

SL94025

· SEN1 [36]

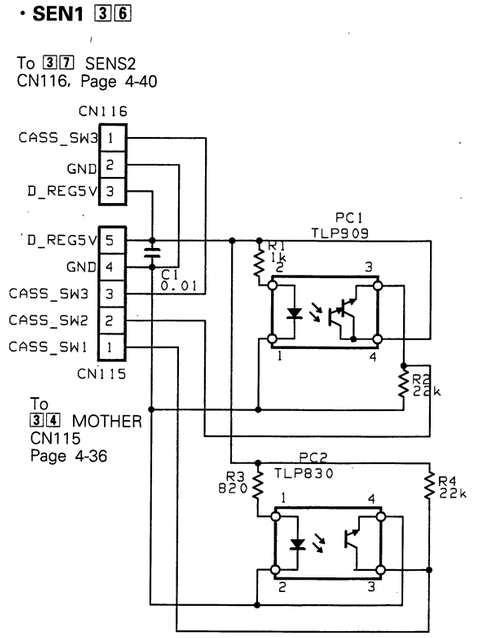

SL94023

· XLR [40]

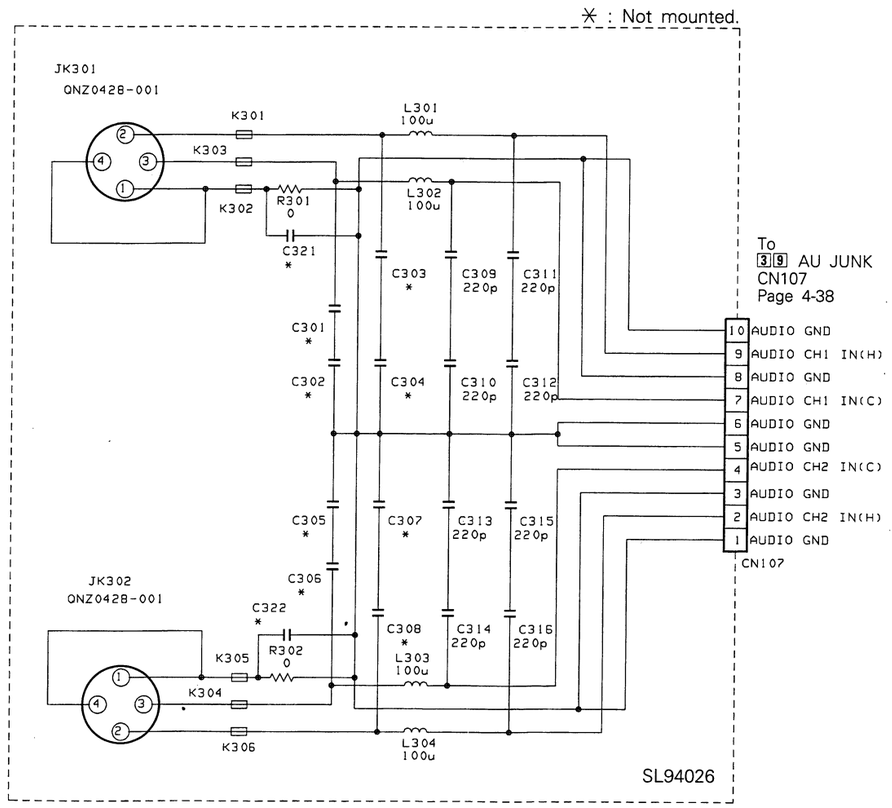

SL94026

· EAR.J [43]

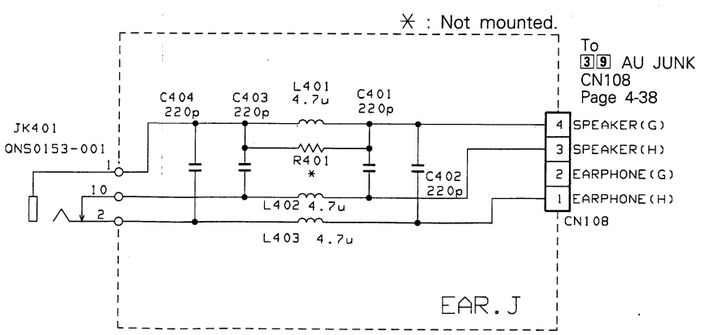

SL94027

· SENS2 [37]

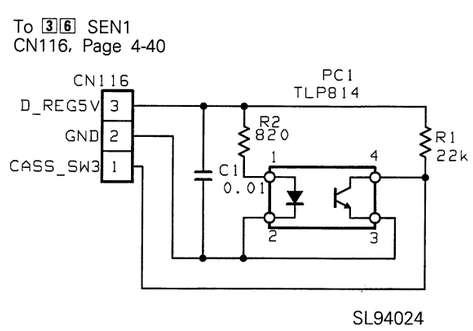

SL94024

4.29 OPE, PWR JUNC, CONNECT, REMOTE, XLR, EAR.J, SEN1, SENS2 CIRCUIT BOARD

· OPE

— SIDE A —

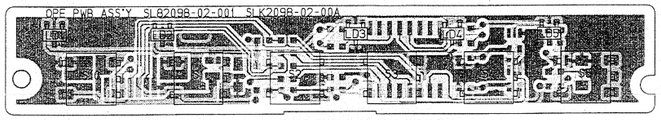

— SIDE B —

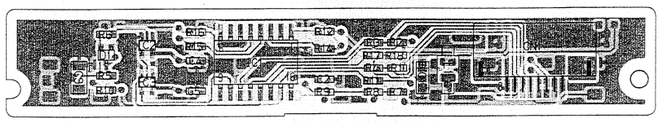

· PWR JUNC

— SIDE B —

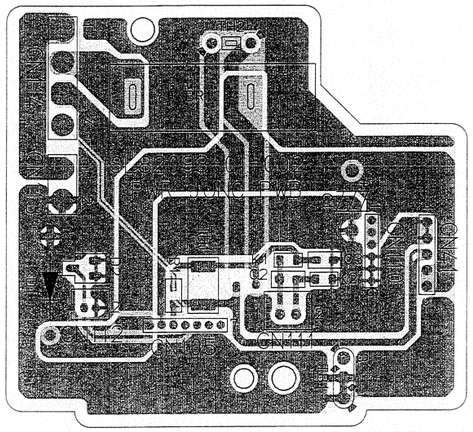

· CONNECT

— SIDE B —

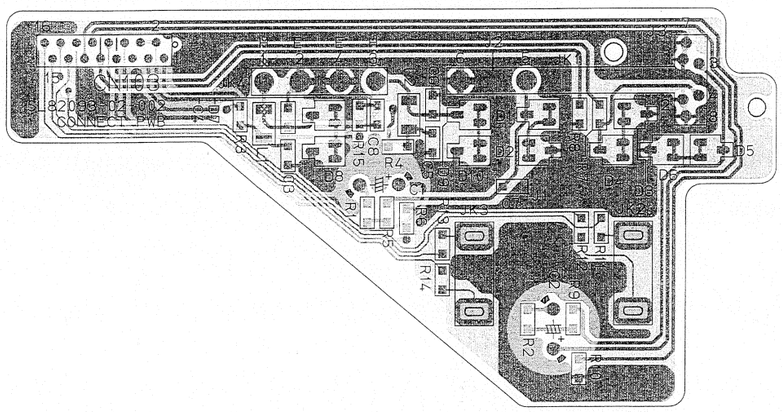

· REMOTE

— SIDE B —

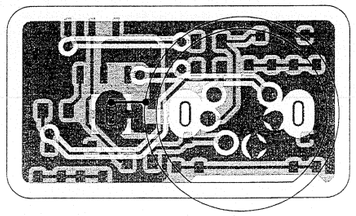

· XLR

— SIDE B —

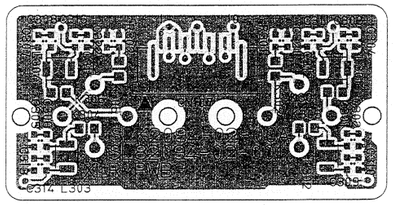

· EAR.J

— SIDE B —

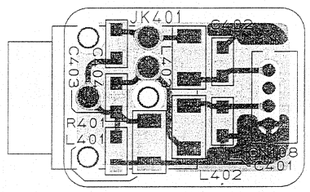

· SEN1

— SIDE A —

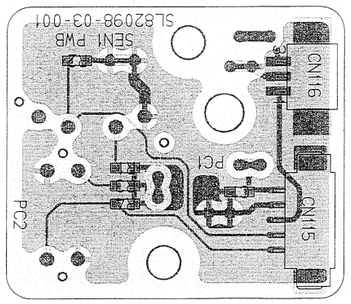

· SENS2

— SIDE A —

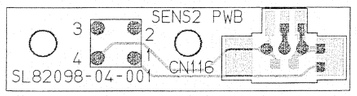

— SIDE B —

4.30 VTR UNIT OVERALL WIRING DIAGRAM

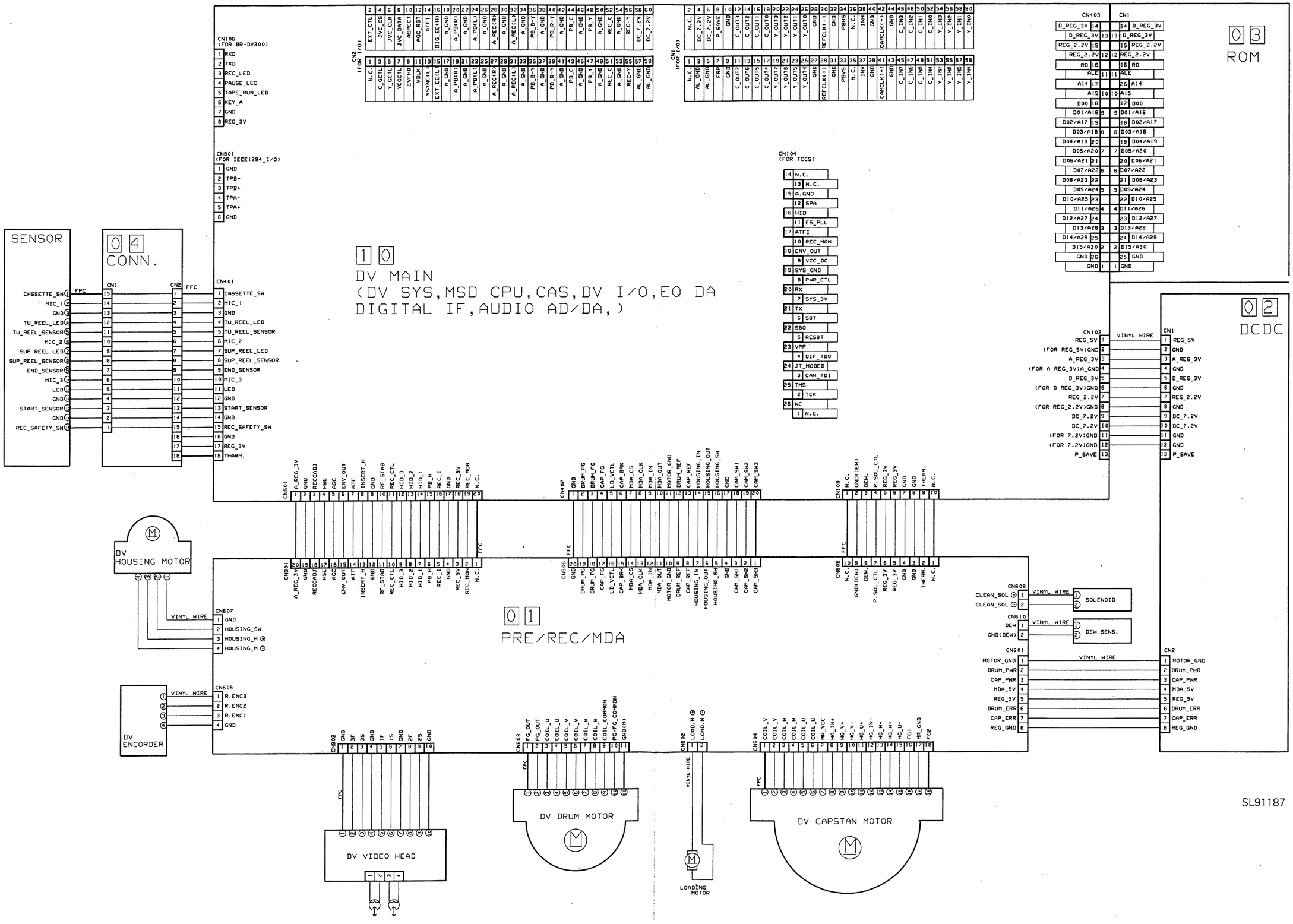

4.31 DV MAIN SCHEMATIC DIAGRAM (1/7) 1 0

– DV CPU –

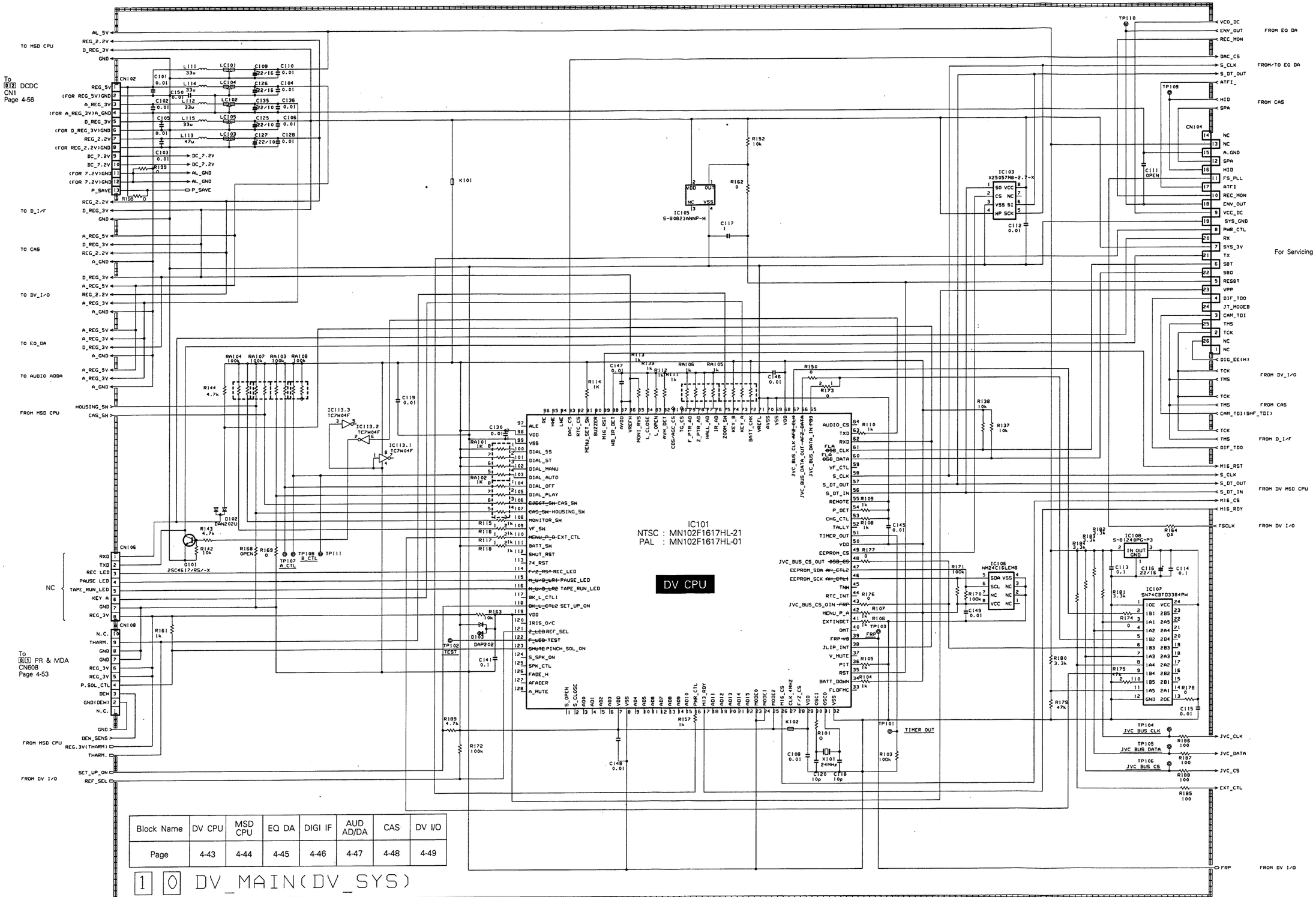

• DV MAIN SCHEMATIC DIAGRAM (2/7) 1 0

– MSD(Mechacon Servo Digi if) CPU –

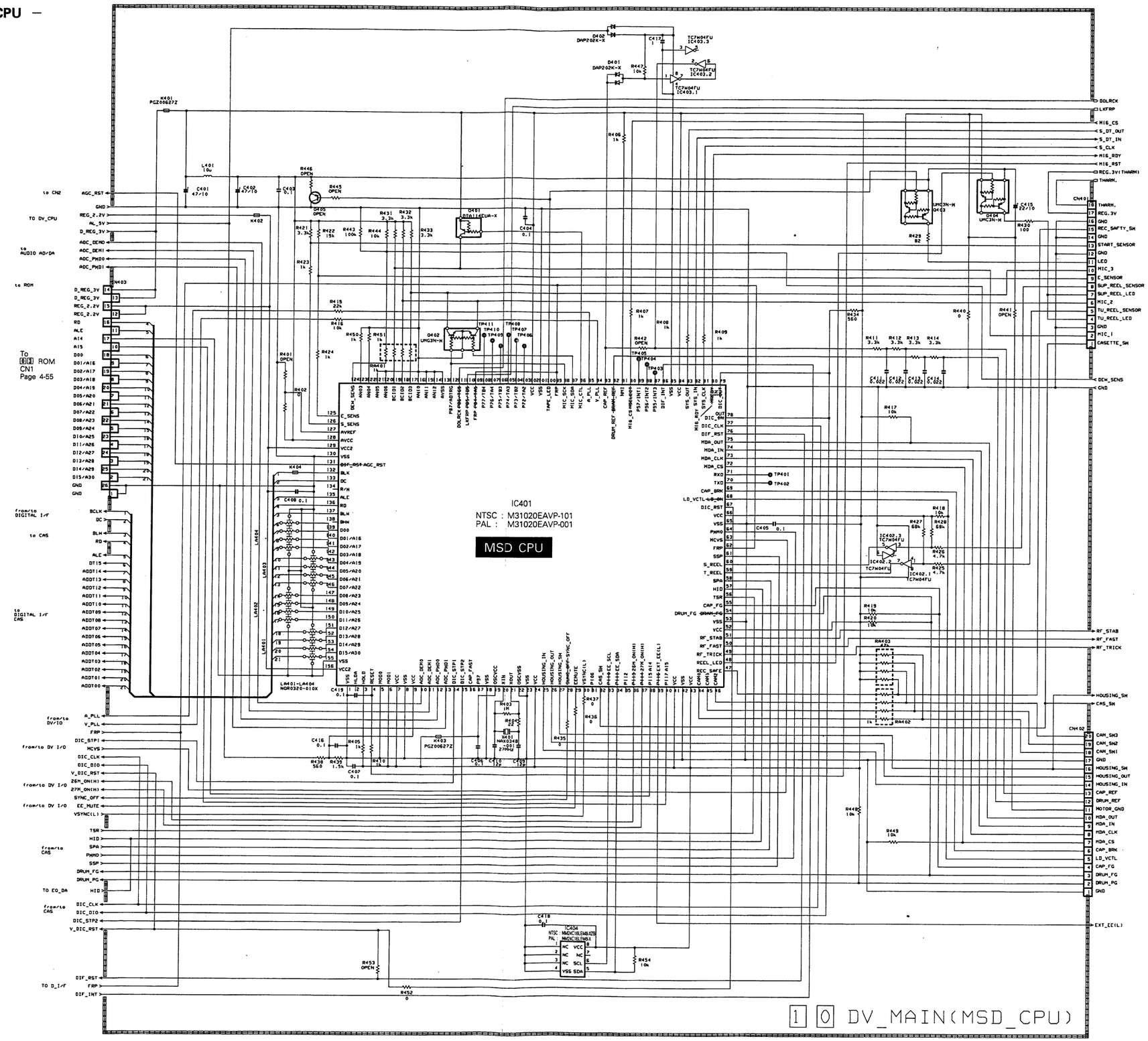

Block Name	Page
DV CPU	4-43
MSD CPU	4-44
EQ DA	4-45
DIGI IF	4-46
AUD AD/DA	4-47
CAS	4-48
DV I/O	4-49

SL91185 2/7

· DV MAIN SCHEMATIC DIAGRAM (3/7) 10

– EQ DA –

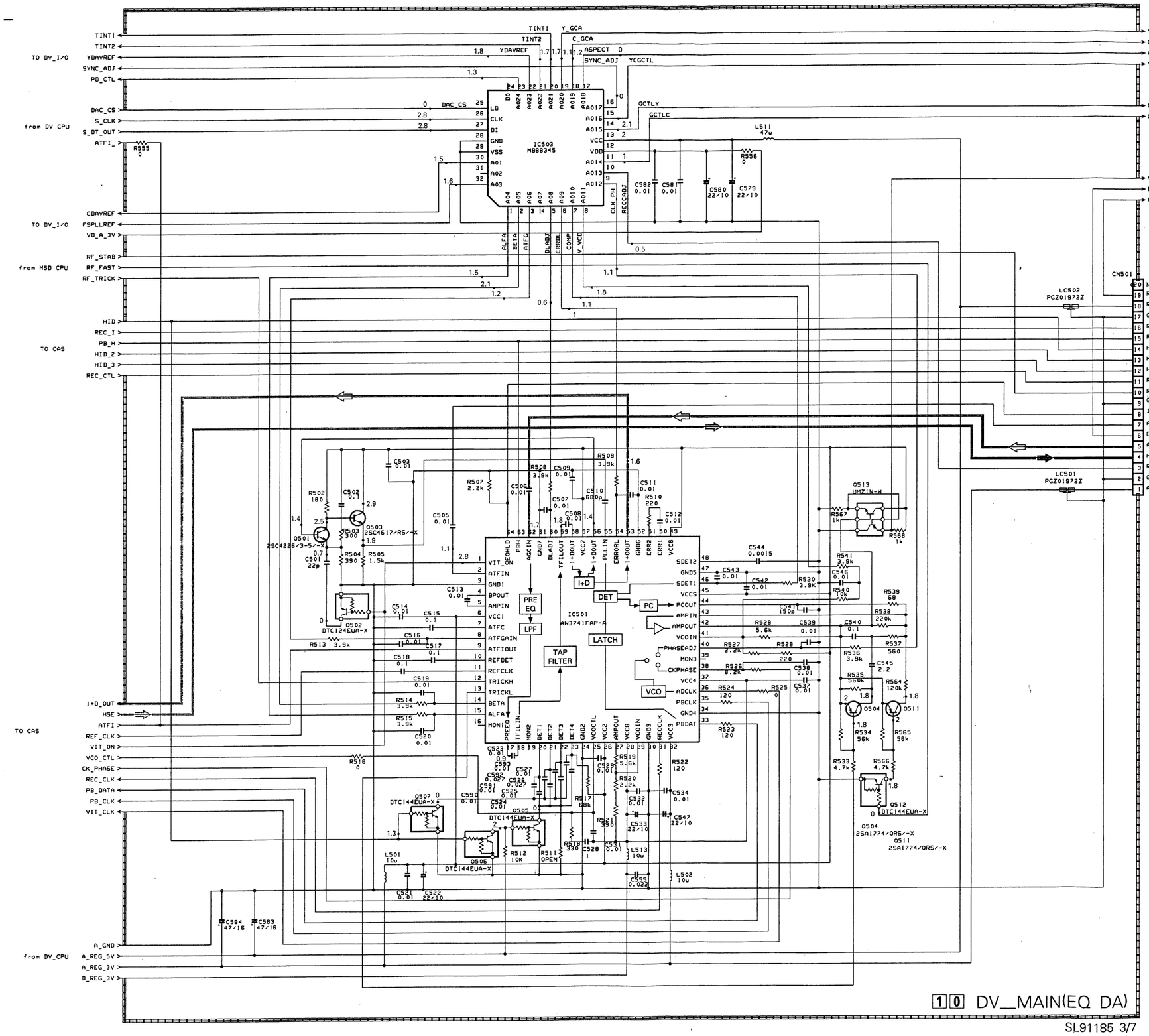

Block Name	Page
DV CPU	4-43
MSD CPU	4-44
EQ DA	4-45
DIGI IF	4-46
AUD AD/DA	4-47
CAS	4-48
DV I/O	4-49

10 DV_MAIN(EQ DA)

SL91185 3/7

· DV MAIN SCHEMATIC DIAGRAM (4/7) 10

– DIGI IF –

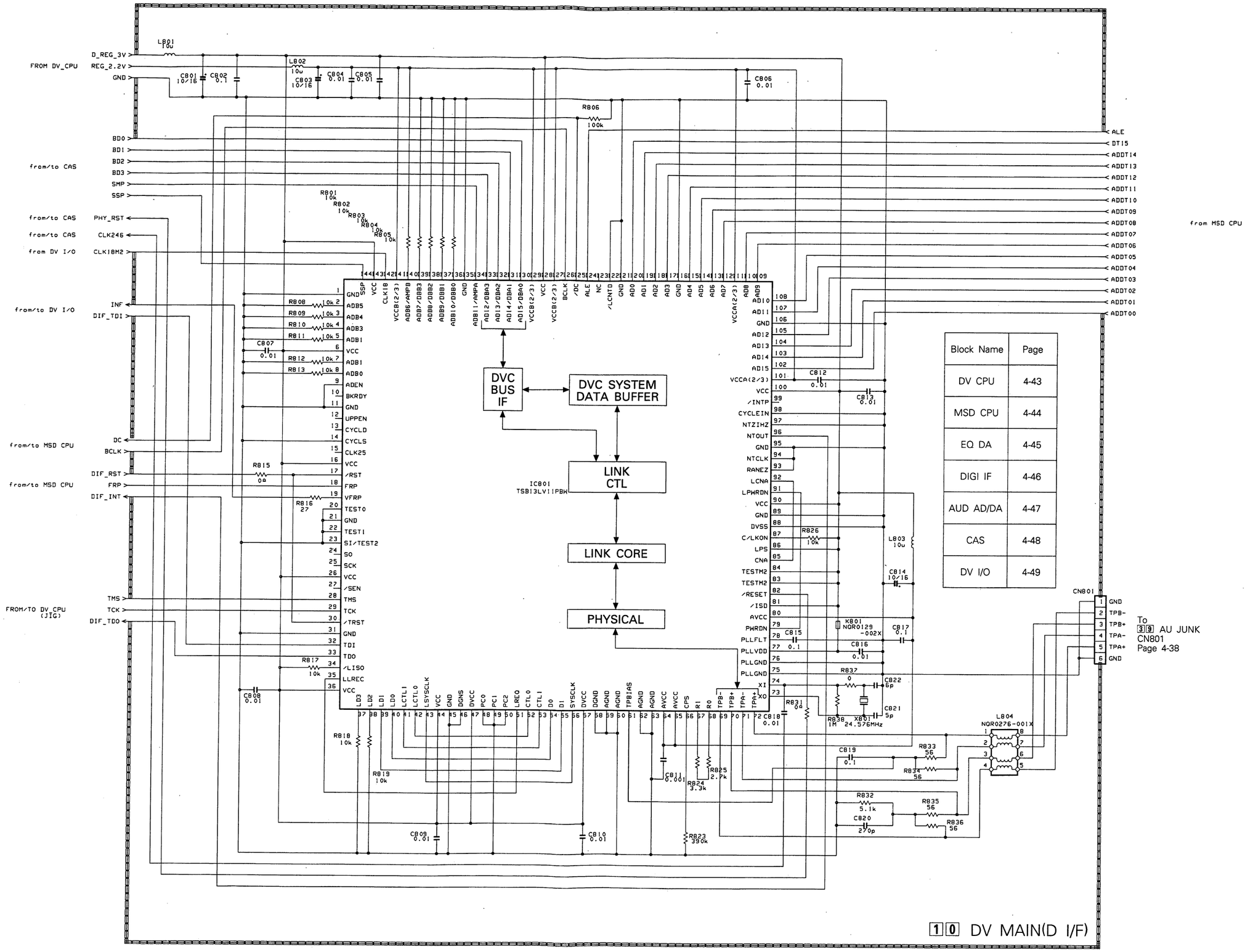

Block Name	Page
DV CPU	4-43
MSD CPU	4-44
EQ DA	4-45
DIGI IF	4-46
AUD AD/DA	4-47
CAS	4-48
DV I/O	4-49

SL91185 4/7

· DV MAIN SCHEMATIC DIAGRAM (5/7) 10

– AUD AD/DA –

Block Name	Page
DV CPU	4-43
MSD CPU	4-44
EQ DA	4-45
DIGI IF	4-46
AUD AD/DA	4-47
CAS	4-48
DV I/O	4-49

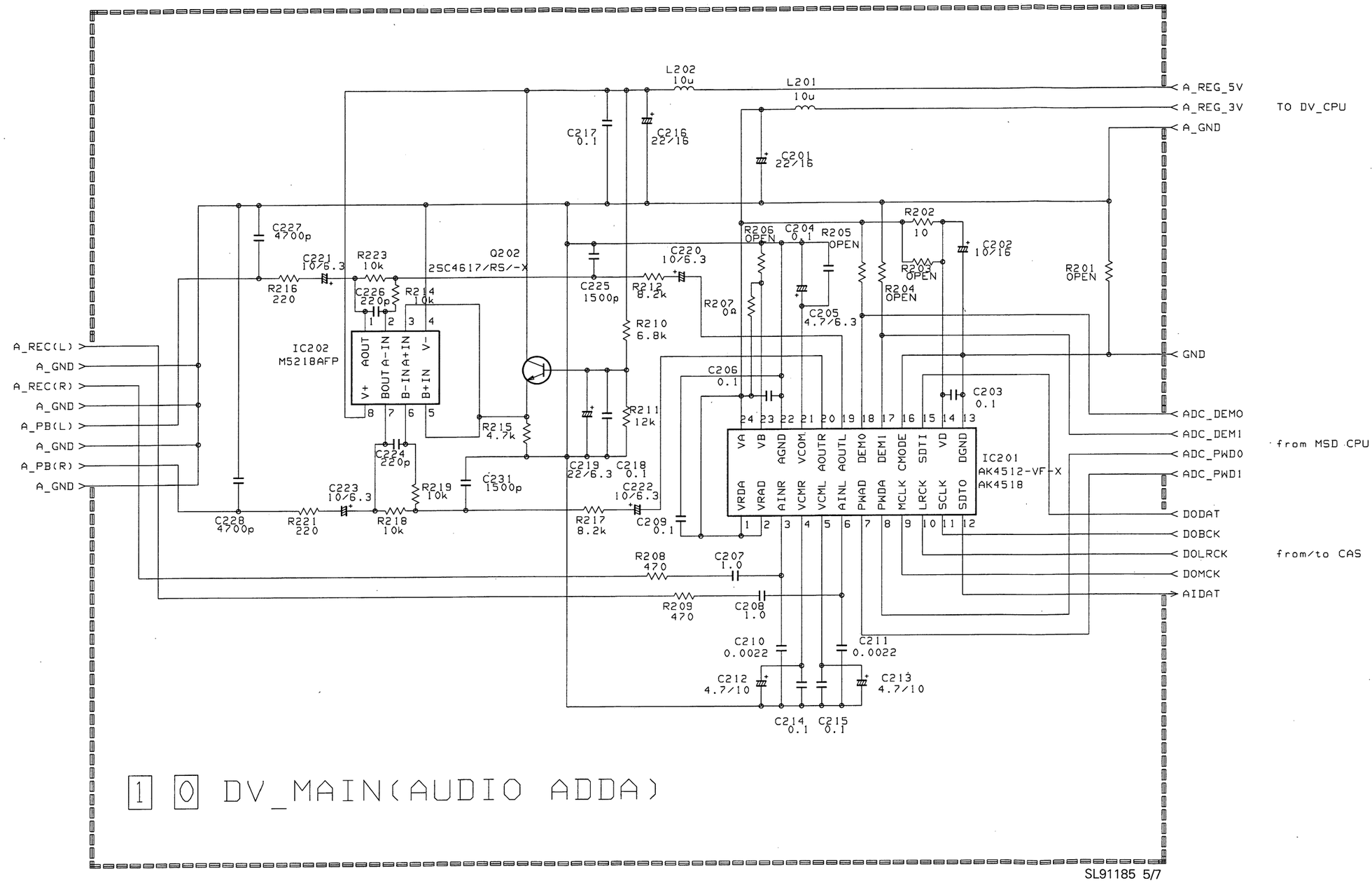

• DV MAIN SCHEMATIC DIAGRAM (6/7) 10

– CAS(Compress Audio Shuffling) –

Block Name	Page
DV CPU	4-43
MSD CPU	4-44
EQ DA	4-45
DIGI IF	4-46
AUD AD/DA	4-47
CAS	4-48
DV I/O	4-49

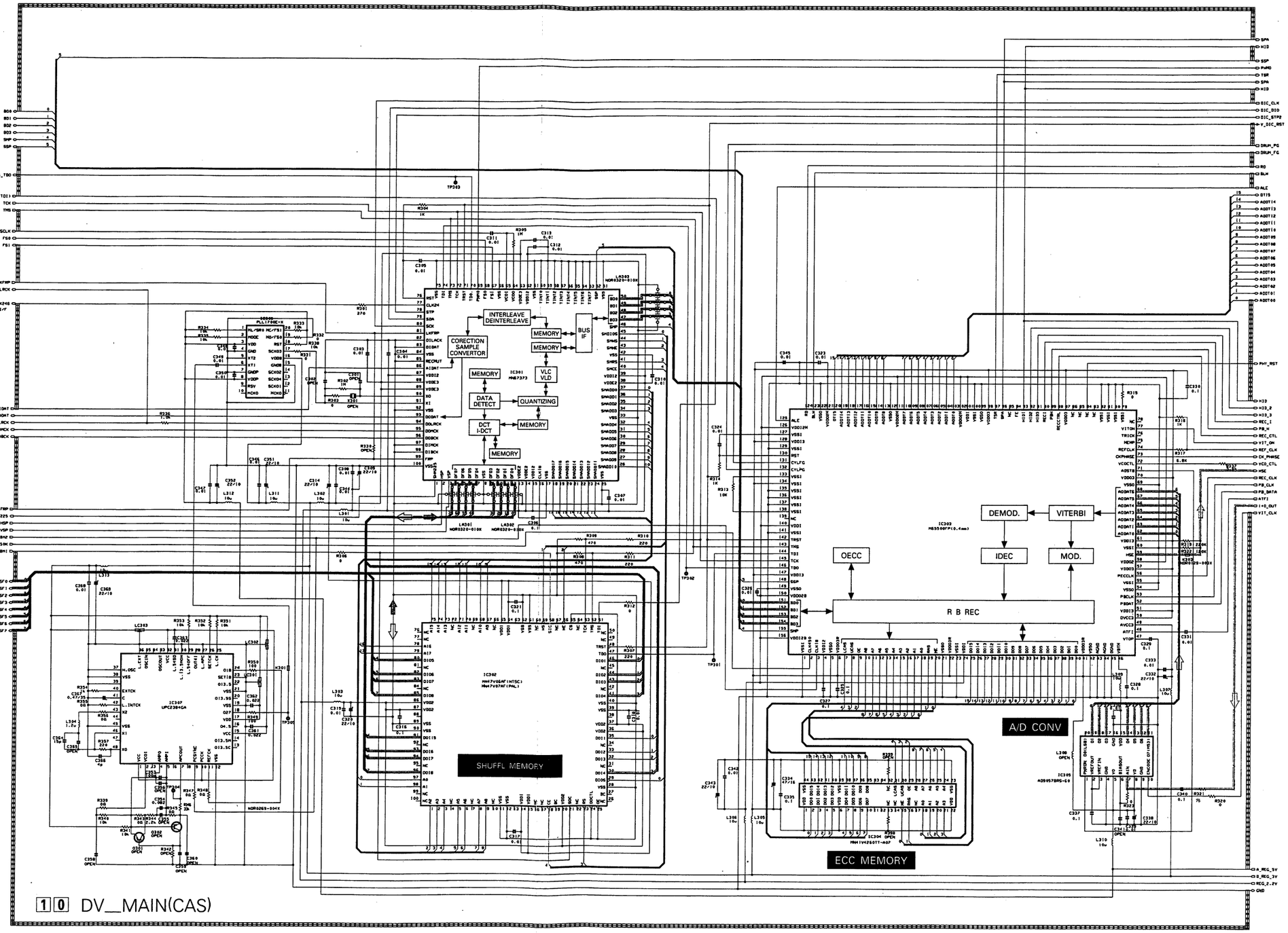

10 DV_MAIN(CAS)

SL91185 6/7

· DV MAIN SCHEMATIC DIAGRAM (7/7) [1][0]

– DV I/O –

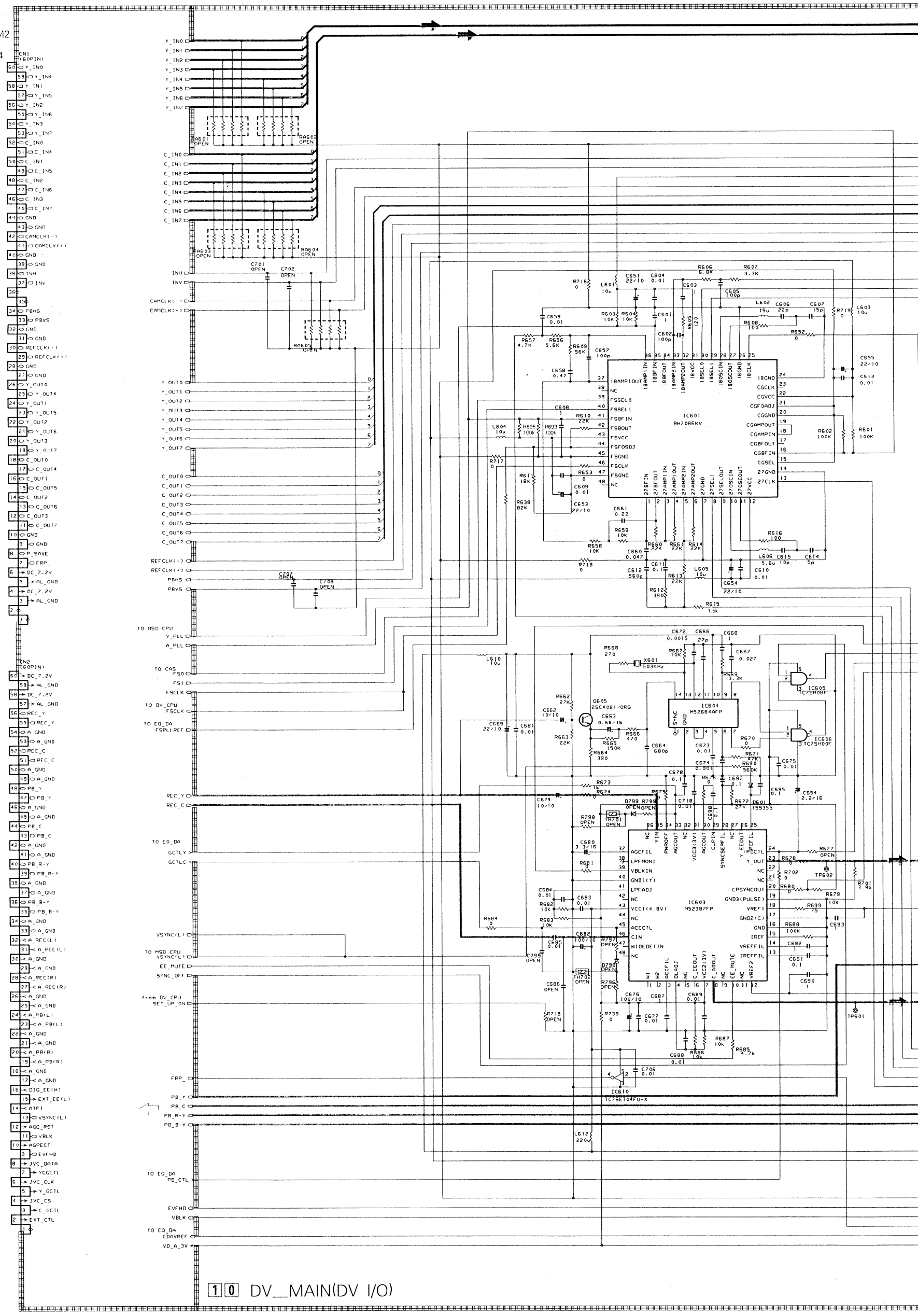

Block Name	DV CPU	MSD CPU	EQ DA	DIGI IF	AUD AD/DA	CAS	DV I/O
Page	4-43	4-44	4-45	4-46	4-47	4-48	4-49

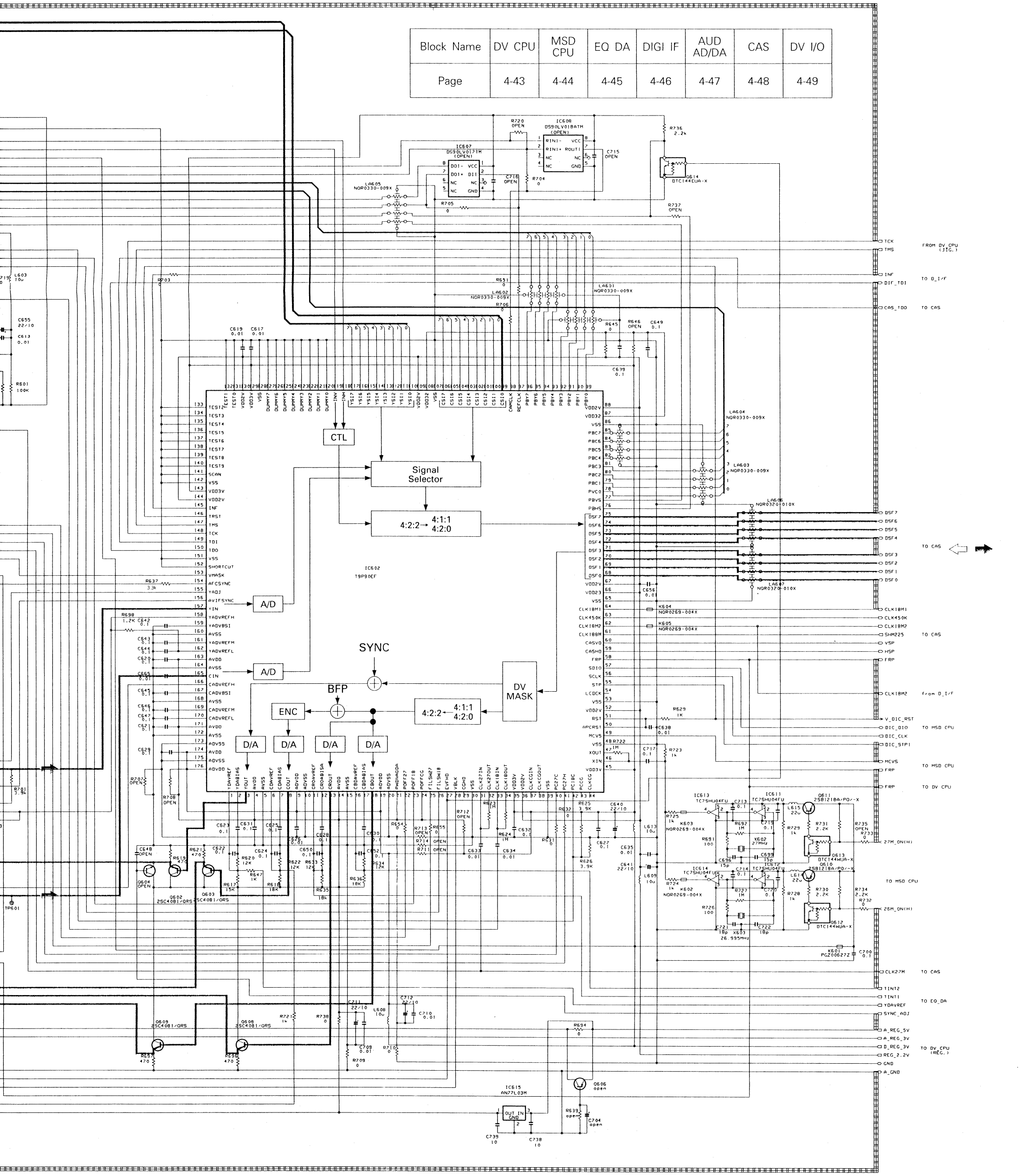

SL91185 7/7

4.32 DV MAIN CIRCUIT BOARD

– SIDE A –

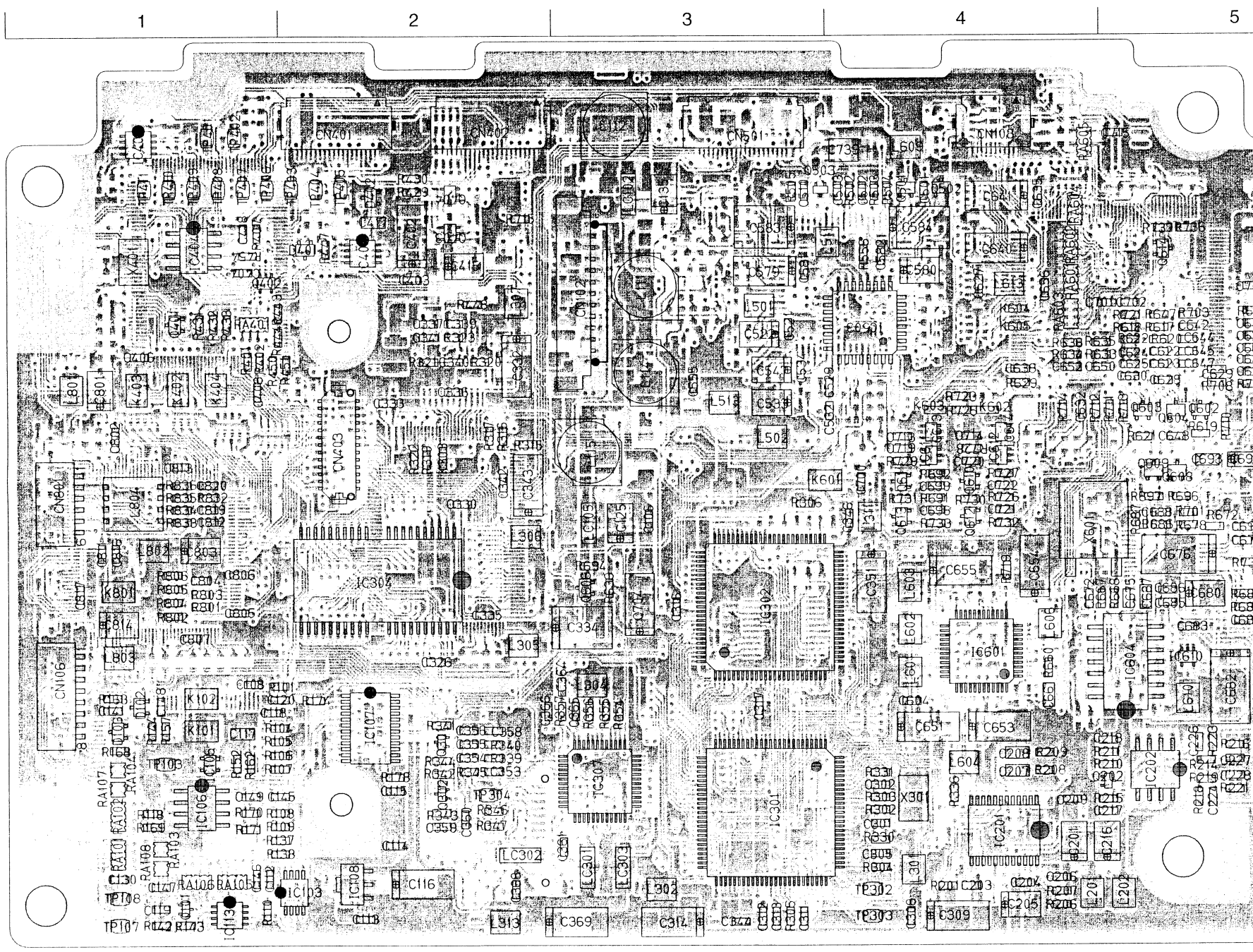

– SIDE B –

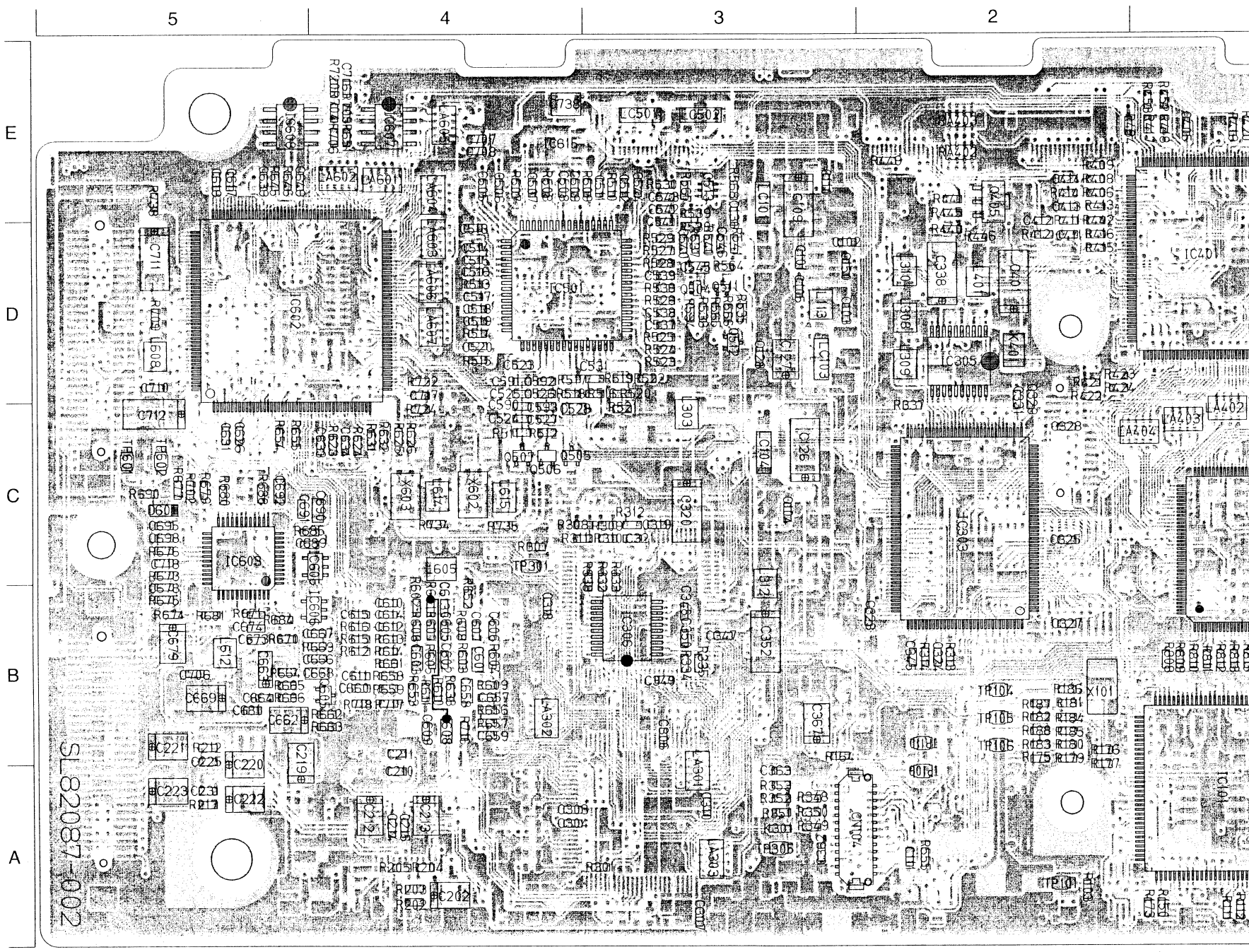

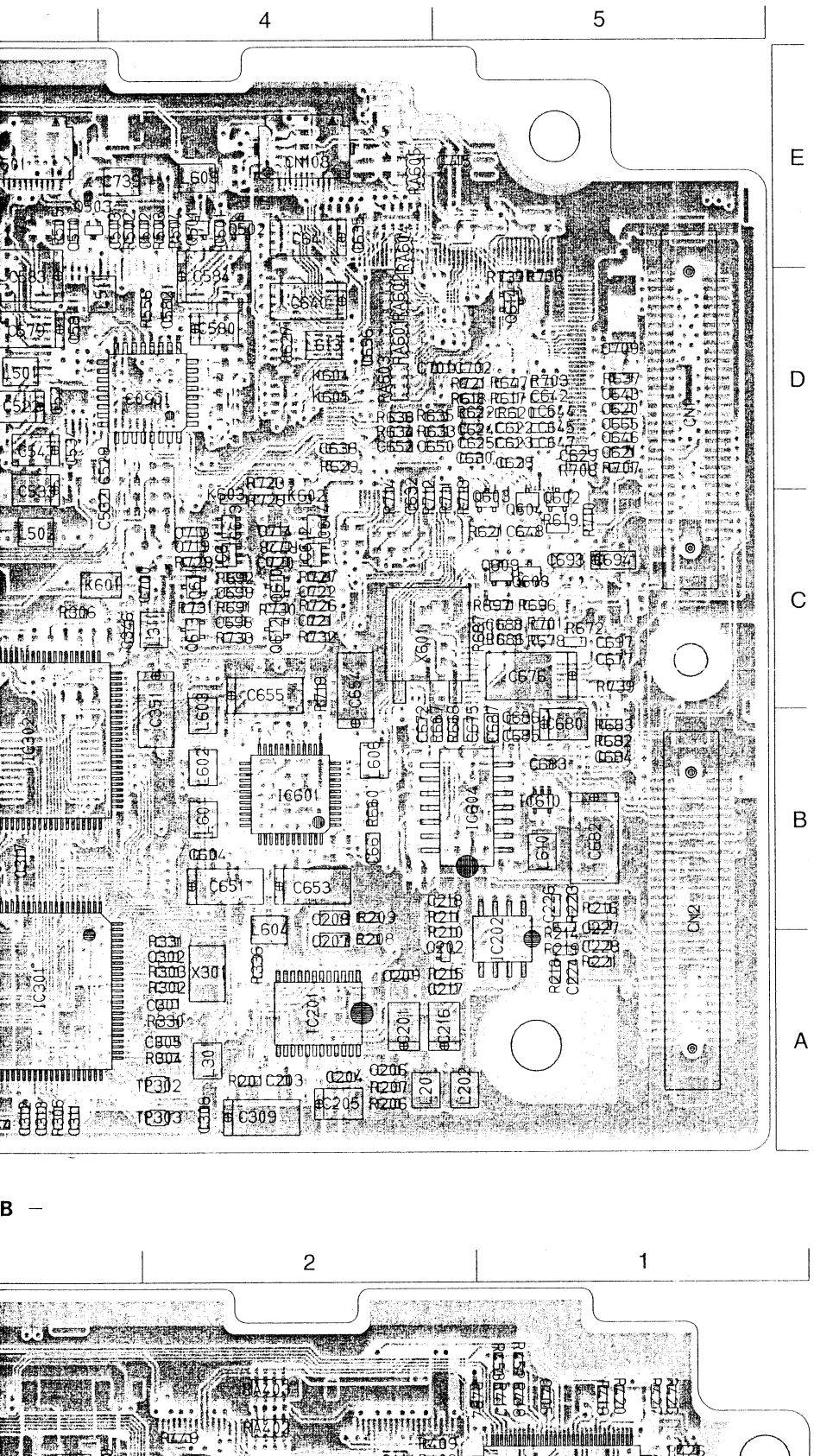

● **ADDRESS TABLE OF BOARD PARTS**

Each address may have an address error by one interval.

Side — A-1C — Y axis / X axis

IC101	B-1B	D402	A-2E	R221	A-5B	R422	B-2D	R565	B-3D	R681	B-5C	R826	B-1D
IC103	A-2B	D601	B-5D	R223	A-5C	R423	B-2D	R566	B-3D	R682	A-5C	R831	B-1D
IC105	A-1B			R301	B-3B	R424	B-2D	R567	B-3E	R683	A-5C	R832	A-1D
IC106	A-1B	R101	A-1C	R302	A-4B	R425	B-1E	R568	B-3E	R684	B-4C	R833	A-1C
IC107	A-2C	R103	B-2B	R303	A-4B	R426	B-1E	R601	B-4C	R685	B-4C	R834	A-1D
IC108	A-2B	R104	A-1C	R304	A-4B	R427	B-1E	R602	B-4C	R686	A-5C	R835	A-1D
IC113	A-1B	R105	A-1C	R305	A-3B	R428	B-1E	R603	B-4C	R687	A-5C	R836	A-1D
IC201	A-4B	R106	A-1B	R306	A-3D	R429	A-2E	R604	B-4C	R688	B-5D	R837	B-1D
IC202	A-5B	R107	A-1B	R307	B-4C	R430	A-2E	R605	B-4C	R690	B-5D	R838	B-1D
IC301	A-3B	R108	A-1B	R308	B-3C	R431	A-1D	R606	B-4C	R691	A-4D		
IC302	A-3C	R109	A-1B	R309	B-3C	R432	A-1D	R607	B-4C	R692	A-4D	C101	B-3E
IC303	B-2C	R110	A-1B	R310	B-3C	R433	A-1D	R608	B-4C	R694	A-3C	C102	B-2E
IC304	A-2C	R111	B-1B	R311	B-3C	R434	B-2E	R609	B-4C	R696	A-5D	C103	B-2D
IC305	B-2D	R112	B-1B	R312	B-3C	R435	B-1E	R610	B-4C	R697	A-5D	C104	B-3D
IC306	B-3C	R113	B-1B	R313	B-2C	R436	B-1E	R611	B-4C	R701	A-5D	C105	B-3D
IC307	A-3B	R114	B-1B	R314	B-2C	R437	B-1E	R612	B-4C	R702	B-5D	C106	A-3C
IC401	B-1E	R115	B-1B	R315	A-2D	R438	B-1D	R613	B-4C	R703	A-5D	C108	A-1C
IC402	A-1E	R116	B-1B	R316	A-2D	R439	B-1D	R614	B-4C	R704	B-4E	C109	B-3E
IC403	A-2E	R117	B-1B	R317	A-2D	R440	B-2E	R615	B-4C	R705	B-4E	C110	B-3E
IC404	A-1E	R118	A-1B	R319	A-2D	R441	B-2E	R616	B-4C	R706	B-4E	C111	B-2B
IC501	B-3E	R137	A-1B	R320	A-2D	R442	B-2E	R617	A-5D	R707	A-5D	C112	A-1B
IC503	A-4D	R138	A-1B	R321	A-2D	R443	A-1D	R618	A-4D	R708	A-5D	C113	A-2B
IC601	A-4C	R139	B-1B	R322	A-2D	R444	A-1D	R619	A-5D	R709	B-5D	C114	A-2B
IC602	B-4D	R142	A-1B	R323	A-2D	R445	B-2E	R620	A-5D	R710	A-5D	C115	A-2B
IC603	B-5C	R143	A-1B	R330	A-4B	R446	B-2E	R621	A-5D	R711	A-4D	C116	A-2B
IC604	A-4C	R144	A-1C	R331	A-4B	R447	A-2E	R622	A-4D	R712	A-4D	C117	A-1C
IC605	B-4C	R150	B-1B	R332	B-3C	R448	A-2D	R623	B-4D	R713	A-4D	C118	A-1C
IC606	B-4C	R152	A-1B	R333	B-3C	R449	B-2E	R624	B-4D	R714	A-4D	C119	A-1B
IC607	B-4E	R157	A-1C	R334	B-3C	R450	A-1D	R625	B-4D	R715	A-2E	C120	A-1C
IC608	B-4E	R161	B-1C	R335	B-3C	R451	A-2D	R626	B-4D	R716	B-4C	C125	A-3C
IC610	A-5C	R162	A-1B	R336	A-4B	R452	B-1E	R629	A-4D	R717	B-4C	C126	B-3D
IC611	A-4D	R163	A-1C	R337	B-2D	R453	B-1E	R631	B-4D	R718	B-4C	C127	B-3D
IC612	A-4D	R164	B-3B	R338	B-3C	R454	A-1E	R632	B-4D	R719	A-4C	C128	B-3D
IC613	A-4D	R168	A-1B	R339	A-2B	R502	A-4E	R633	A-4D	R720	B-4E	C130	A-1B
IC614	A-4D	R169	A-1B	R340	A-2C	R503	A-4E	R634	A-4D	R721	A-4D	C135	A-3E
IC615	B-4E	R170	A-1B	R341	A-2C	R504	A-4E	R635	A-4D	R722	B-4D	C136	B-3E
IC801	B-1C	R171	A-1B	R342	A-2B	R505	A-3E	R636	A-4D	R723	A-4D	C141	A-1C
		R172	B-1C	R343	A-2B	R507	B-4E	R637	A-5D	R724	B-4D	C145	A-1B
Q101	A-1B	R173	B-1B	R344	A-2B	R508	B-4E	R638	B-4C	R725	A-4D	C146	A-1B
Q202	A-4B	R174	A-2C	R345	A-2B	R509	B-3E	R639	A-3C	R726	A-4D	C147	A-1B
Q301	A-2C	R175	B-2B	R346	A-2B	R510	B-3E	R645	B-5E	R727	A-4D	C148	A-1C
Q302	A-2B	R176	B-2B	R347	A-2B	R511	B-4D	R646	B-4E	R728	A-4D	C149	A-1B
Q401	A-1D	R177	B-2B	R348	B-3B	R512	B-4D	R647	A-5D	R729	A-4D	C150	B-2E
Q402	A-1E	R178	A-2B	R349	B-3B	R513	B-4E	R651	B-4E	R730	A-4D	C201	A-4B
Q403	A-2E	R179	B-2B	R350	B-3B	R514	B-4D	R652	B-4C	R731	A-4D	C202	B-4B
Q404	A-2E	R180	B-2B	R351	B-3B	R515	B-4D	R653	B-4C	R732	A-4C	C203	A-4B
Q405	B-2E	R181	B-2C	R352	B-3B	R516	B-3D	R654	B-4D	R733	A-4C	C204	A-4B
Q501	A-4E	R182	B-2C	R353	B-3B	R517	B-3D	R655	B-4D	R734	B-4C	C205	A-4B
Q502	A-4E	R183	B-2B	R354	A-3C	R518	B-3D	R656	B-4C	R735	B-4C	C206	A-4B
Q503	A-3E	R184	B-2C	R355	A-3C	R519	B-3D	R657	B-4C	R736	A-5E	C207	A-4B
Q504	B-3D	R185	B-2C	R356	A-3C	R520	B-3D	R658	B-4C	R737	A-5E	C208	A-4B
Q505	B-3D	R186	B-2C	R357	A-2C	R521	B-3D	R659	B-4C	R738	B-5E	C209	A-4B
Q506	B-4D	R187	B-2C	R401	A-1D	R522	B-3D	R660	A-4C	R739	A-5C	C210	B-4B
Q507	B-4D	R188	B-2C	R402	A-1D	R523	B-3D	R661	B-4C	R801	A-1C	C211	B-4B
Q511	B-3D	R189	B-1B	R403	B-1E	R524	B-3D	R662	B-4C	R802	A-1C	C212	B-4B
Q512	B-3D	R201	A-4B	R404	B-1E	R525	B-3D	R663	B-4C	R803	A-1C	C213	B-4B
Q513	B-3E	R202	B-4B	R405	B-1D	R526	B-3D	R664	B-4C	R804	A-1C	C214	B-4B
Q602	A-5D	R203	B-4B	R406	B-2E	R527	B-3E	R665	B-4C	R805	A-1C	C215	B-4B
Q603	A-5D	R204	B-4B	R407	A-1E	R528	B-3E	R666	B-4C	R806	A-1C	C216	A-4B
Q604	A-5D	R205	B-4B	R408	B-2E	R529	B-3E	R667	A-4C	R808	B-1C	C217	A-4B
Q605	B-4C	R206	A-4B	R409	B-2E	R530	B-3E	R668	A-4C	R809	B-1C	C218	A-4C
Q606	A-3C	R207	A-4B	R410	B-1D	R533	B-3D	R669	B-4C	R810	B-1C	C219	B-4B
Q608	A-5D	R208	A-4B	R411	B-2E	R534	B-3D	R670	B-4C	R811	B-1C	C220	B-5B
Q609	A-5D	R209	A-4B	R412	B-2E	R535	B-3D	R671	B-5C	R812	B-1C	C221	B-5B
Q610	A-4D	R210	A-4B	R413	B-2E	R536	B-3D	R672	A-5C	R813	B-1C	C222	B-5B
Q611	A-4D	R211	A-4B	R414	B-2E	R537	B-3E	R673	B-5C	R815	B-1C	C223	B-5B
Q612	A-4C	R212	B-5B	R415	B-2E	R538	B-3E	R674	B-5C	R816	B-1C	C224	A-5B
Q613	A-4C	R214	A-5B	R416	B-2E	R539	B-3E	R675	B-5C	R817	B-1C	C225	B-5B
Q614	A-5E	R215	A-4B	R417	B-1E	R540	B-3E	R676	B-5C	R818	B-1C	C226	A-5C
		R216	A-5B	R418	B-1E	R541	B-3E	R677	B-5D	R819	B-1C	C227	A-5B
D102	A-1C	R217	B-5B	R419	B-1E	R555	B-2B	R678	A-5C	R823	B-1D	C228	A-5B
D103	A-1C	R218	A-5B	R420	B-1E	R556	A-4E	R679	B-5D	R824	B-1D	C231	B-5B
D401	A-2E	R219	A-5B	R421	B-2D	R564	B-3E	R680	B-5D	R825	B-1D	C301	A-4B

· DV MAIN CIRCUIT BOARD (FOR SERIAL No.××××0332 AND AFTER OF GY-DV500U, ××××0545 AND AFTER OF GY-DV500E)

– SIDE A –

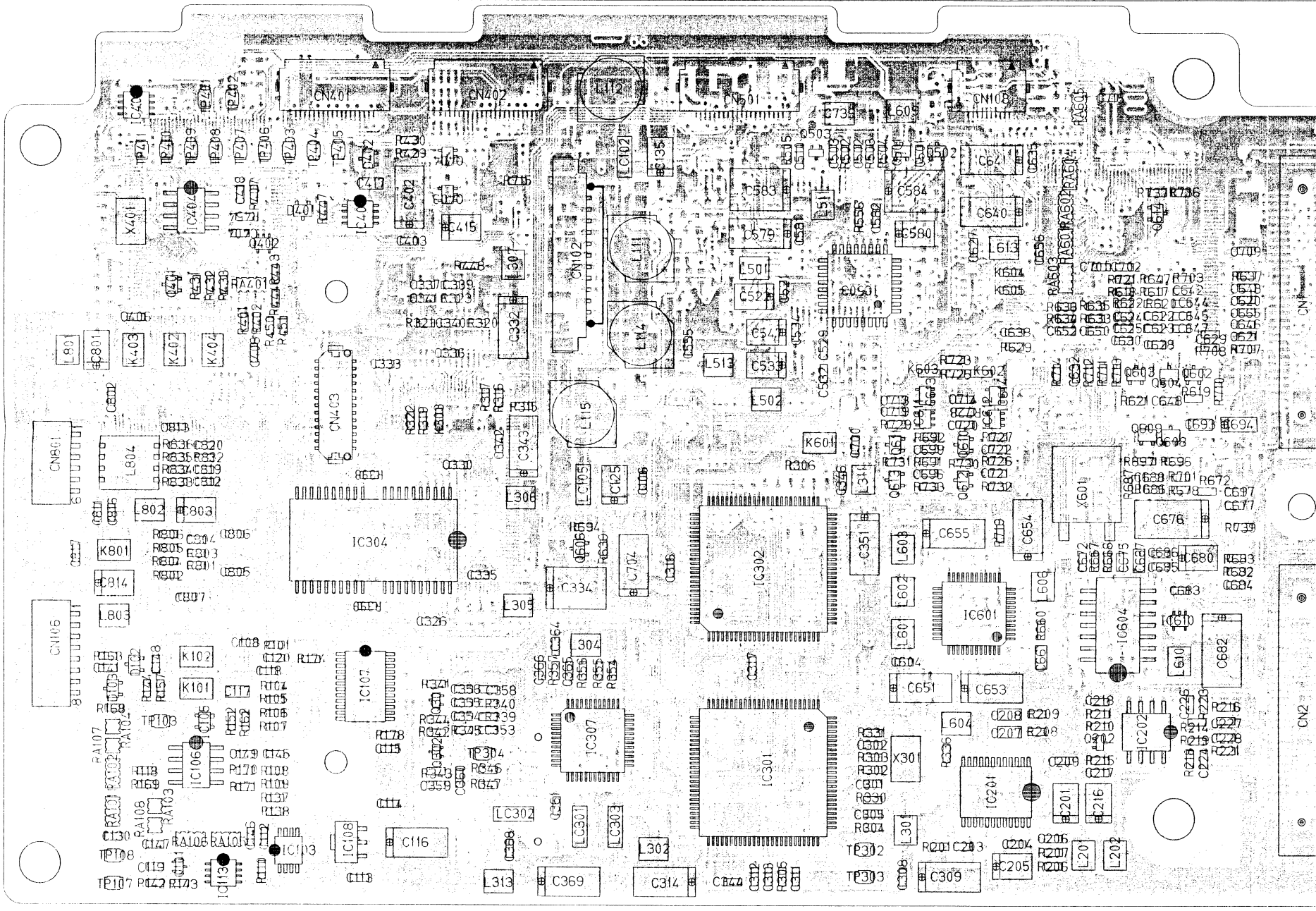

– SIDE B –

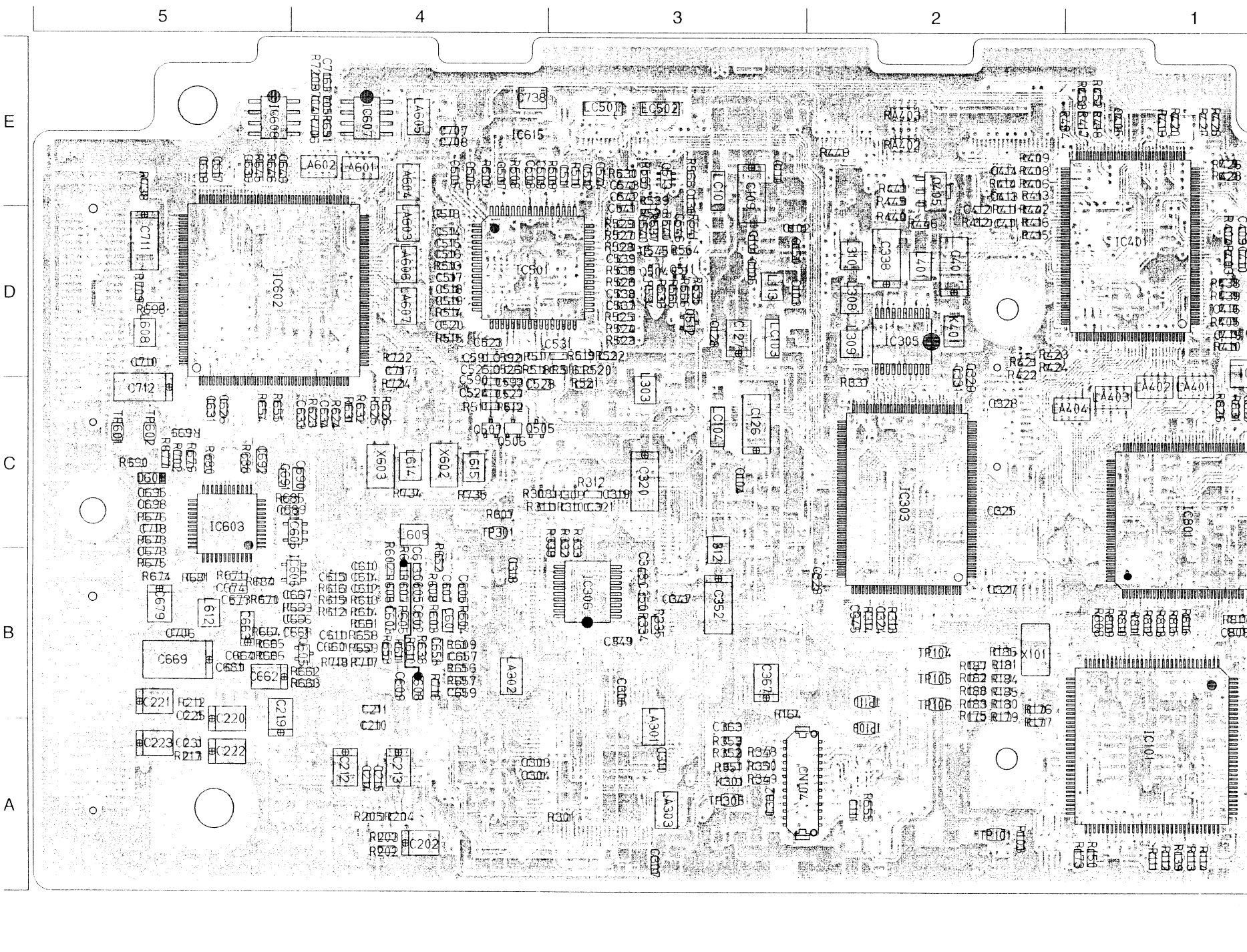

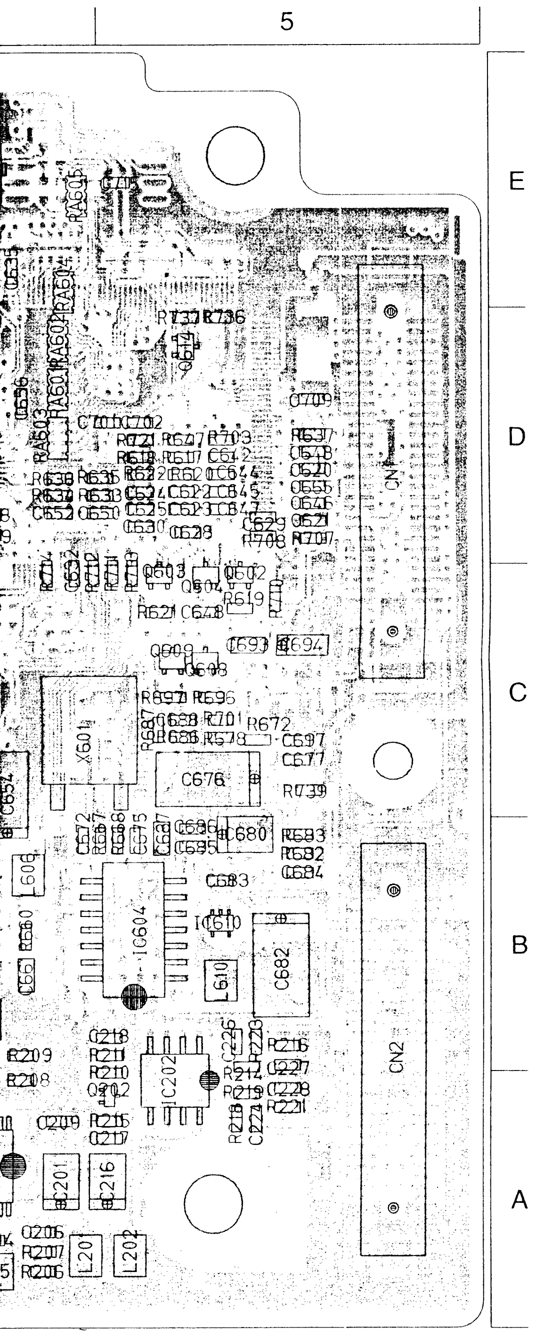

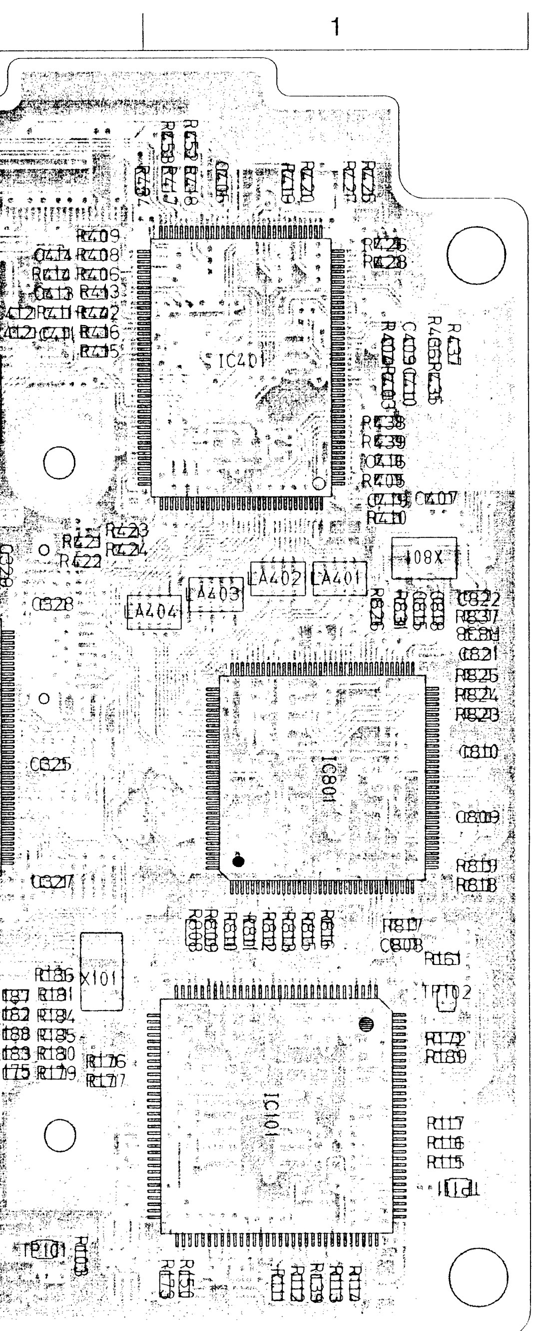

● **ADDRESS TABLE OF BOARD PARTS**

Each address may have an address error by one interval.

```
      A-1C
Side ─┘ │ └── Y axis
        └──── X axis
```

IC101	B-1B	D402	A-2E	R221	A-5B	R420	B-1E	R556	A-4E	R679	B-5D	R819	B-1C
IC103	A-2B	D601	B-5D	R223	A-5C	R421	B-2D	R564	B-3E	R680	B-5D	R823	B-1D
IC105	A-1B			R301	B-3B	R422	B-2D	R565	B-3D	R681	B-5C	R824	B-1D
IC106	A-1B	R101	A-1C	R302	A-4B	R423	B-2D	R566	B-3D	R682	A-5C	R825	B-1D
IC107	A-2C	R103	B-2B	R303	A-4B	R424	B-2D	R567	B-3E	R683	A-5C	R826	B-1D
IC108	A-2B	R104	A-1C	R304	A-4B	R425	B-1E	R568	B-3E	R684	B-4C	R831	B-1D
IC113	A-1B	R105	A-1C	R305	A-3B	R426	B-1E	R601	B-4C	R685	B-4C	R832	A-1D
IC201	A-4B	R106	A-1B	R306	A-3D	R427	B-1E	R602	B-4C	R686	A-5C	R833	A-1C
IC202	A-5B	R107	A-1B	R307	B-4C	R428	B-1E	R603	B-4C	R687	A-5C	R834	A-1D
IC301	A-3B	R108	A-1B	R308	B-3C	R429	A-2E	R604	B-4C	R688	B-5D	R835	A-1D
IC302	A-3C	R109	A-1B	R309	B-3C	R430	A-2E	R605	B-4C	R690	B-5D	R836	A-1D
IC303	B-2C	R110	A-1B	R310	B-3C	R431	A-1D	R606	B-4C	R691	A-4D	R837	B-1D
IC304	A-2C	R111	B-1B	R311	B-3C	R432	A-1D	R607	B-4C	R692	A-4D	R838	B-1D
IC305	B-2D	R112	B-1B	R312	B-3C	R433	A-1D	R608	B-4C	R694	A-3C		
IC306	B-3C	R113	B-1B	R313	B-2C	R434	B-2E	R609	B-4C	R696	A-5D	C101	B-3E
IC307	A-3B	R114	B-1B	R314	B-2C	R435	B-1E	R610	B-4C	R697	A-5D	C102	B-2E
IC401	B-1E	R115	B-1B	R315	A-2D	R436	B-1E	R611	B-4C	R698	B-5D	C103	B-2D
IC402	A-1E	R116	B-1B	R316	A-2D	R437	B-1E	R612	B-4C	R699	B-5D	C104	B-3D
IC403	A-2E	R117	B-1B	R317	A-2D	R438	B-1D	R613	B-4C	R701	A-5D	C105	B-3D
IC404	A-1E	R118	A-1B	R319	A-2D	R439	B-1D	R614	B-4C	R702	B-5D	C106	A-3C
IC501	B-3E	R137	A-1B	R320	A-2D	R440	B-2E	R615	B-4C	R703	A-5D	C108	A-1C
IC503	A-4D	R138	A-1B	R321	A-2D	R441	B-2E	R616	B-4C	R704	B-4E	C109	B-3E
IC601	A-4C	R139	B-1B	R322	A-2D	R442	B-2E	R617	A-5D	R705	B-4E	C110	B-3E
IC602	B-4D	R142	A-1B	R323	A-2D	R443	A-1D	R618	A-4D	R706	B-4E	C111	B-2B
IC603	B-5C	R143	A-1B	R330	A-4B	R444	A-1D	R619	A-5D	R707	A-5D	C112	A-1B
IC604	A-4C	R144	A-1C	R331	A-4B	R445	B-2E	R620	A-5D	R708	A-5D	C113	A-2B
IC605	B-4C	R150	B-1B	R332	B-3C	R446	B-2E	R621	A-5D	R709	B-5D	C114	A-2B
IC606	B-4C	R152	A-1B	R333	B-3C	R447	A-2E	R622	A-4D	R710	A-5D	C115	A-2B
IC607	B-4E	R157	A-1C	R334	B-3C	R448	A-2D	R623	B-4D	R711	A-4D	C116	A-2B
IC608	B-4E	R161	B-1C	R335	B-3C	R449	B-2E	R624	B-4D	R712	A-4D	C117	A-1C
IC610	A-5C	R162	A-1B	R336	A-4B	R450	A-1D	R625	B-4D	R713	A-4D	C118	A-1C
IC611	A-4D	R163	A-1C	R337	B-2D	R451	A-2D	R626	B-4D	R714	A-4D	C119	A-1B
IC612	A-4D	R164	B-3B	R338	B-3C	R452	B-1E	R629	A-4D	R715	A-2E	C120	A-1C
IC613	A-4D	R168	A-1B	R339	A-2B	R453	B-1E	R631	B-4D	R716	B-4C	C125	A-3C
IC614	A-4D	R169	A-1B	R340	A-2C	R454	A-1E	R632	B-4D	R717	B-4C	C126	B-3D
IC615	B-4E	R170	A-1B	R341	A-2C	R502	A-4E	R633	A-4D	R718	B-4C	C127	B-3D
IC801	B-1C	R171	A-1B	R342	A-2B	R503	A-4E	R634	A-4D	R719	A-4C	C128	B-3D
		R172	B-1C	R343	A-2B	R504	A-4E	R635	A-4D	R720	B-4E	C130	A-1B
Q101	A-1B	R173	B-1B	R344	A-2B	R505	A-3E	R636	A-4D	R721	A-4D	C135	A-3E
Q202	A-4B	R174	A-2C	R345	A-2B	R507	B-4E	R637	A-5D	R722	B-4D	C136	B-3E
Q301	A-2C	R175	B-2B	R346	A-2B	R508	B-4E	R638	B-4C	R723	A-4D	C141	A-1C
Q302	A-2B	R176	B-2B	R347	A-2B	R509	B-3E	R639	A-3C	R724	B-4D	C145	A-1B
Q401	A-1D	R177	B-2B	R348	B-3B	R510	B-3E	R645	B-5E	R725	A-4D	C146	A-1B
Q402	A-1E	R178	A-2B	R349	B-3B	R511	B-4D	R646	B-4E	R726	A-4D	C147	A-1B
Q403	A-2E	R179	B-2B	R350	B-3B	R512	B-4D	R647	A-5D	R727	A-4D	C148	A-1C
Q404	A-2E	R180	B-2B	R351	B-3B	R513	B-4E	R651	B-4E	R728	A-4D	C149	A-1B
Q405	B-2E	R181	B-2C	R352	B-3B	R514	B-4D	R652	B-4C	R729	A-4D	C150	B-2E
Q501	A-4E	R182	B-2C	R353	B-3B	R515	B-4D	R653	B-4C	R730	A-4D	C201	A-4B
Q502	A-4E	R183	B-2B	R354	A-3C	R516	B-3D	R654	B-4D	R731	A-4D	C202	B-4B
Q503	A-3E	R184	B-2C	R355	A-3C	R517	B-3D	R655	B-4D	R732	A-4C	C203	A-4B
Q504	B-3D	R185	B-2C	R356	A-3C	R518	B-3D	R656	B-4C	R733	A-4C	C204	A-4B
Q505	B-3D	R186	B-2C	R357	A-2C	R519	B-3D	R657	B-4C	R734	B-4C	C205	A-4B
Q506	B-4D	R187	B-2C	R398	A-2D	R520	B-3D	R658	B-4C	R735	B-4C	C206	A-4B
Q507	B-4D	R188	B-2C	R399	A-2C	R521	B-3D	R659	B-4C	R736	A-5E	C207	A-4B
Q511	B-3D	R189	B-1B	R401	A-1D	R522	B-3D	R660	A-4C	R737	A-5E	C208	A-4B
Q512	B-3D	R201	A-4B	R402	A-1D	R523	B-3D	R661	B-4C	R738	B-5E	C209	A-4B
Q513	B-3E	R202	B-4B	R403	B-1E	R524	B-3D	R662	B-4C	R739	A-5C	C210	B-4B
Q602	A-5D	R203	B-4B	R404	B-1E	R525	B-3D	R663	B-4C	R801	A-1C	C211	B-4B
Q603	A-5D	R204	B-4B	R405	B-1D	R526	B-3D	R664	B-4C	R802	A-1C	C212	B-4B
Q604	A-5D	R205	B-4B	R406	B-2E	R527	B-3E	R665	B-4C	R803	A-1C	C213	B-4B
Q605	B-4C	R206	A-4B	R407	A-1E	R528	B-3E	R666	B-4C	R804	A-1C	C214	B-4B
Q606	A-3C	R207	A-4B	R408	B-2E	R529	B-3E	R667	A-4C	R805	A-1C	C215	B-4B
Q608	A-5D	R208	A-4B	R409	B-2E	R530	B-3E	R668	A-4C	R806	A-1C	C216	A-4B
Q609	A-5D	R209	A-4B	R410	B-1D	R533	B-3D	R669	B-4C	R808	B-1C	C217	A-4B
Q610	A-4D	R210	A-4B	R411	B-2E	R534	B-3D	R670	B-4C	R809	B-1C	C218	A-4C
Q611	A-4D	R211	A-4B	R412	B-2E	R535	B-3D	R671	B-5C	R810	B-1C	C219	B-4B
Q612	A-4C	R212	B-5B	R413	B-2E	R536	B-3D	R672	A-5C	R811	B-1C	C220	B-5B
Q613	A-4C	R214	A-5B	R414	B-2E	R537	B-3E	R673	B-5C	R812	B-1C	C221	B-5B
Q614	A-5E	R215	A-4B	R415	B-2E	R538	B-3E	R674	B-5C	R813	B-1C	C222	B-5B
		R216	A-5B	R416	B-2E	R539	B-3E	R675	B-5C	R815	B-1C	C223	B-5B
D102	A-1C	R217	B-5B	R417	B-1E	R540	B-3E	R676	B-5C	R816	B-1C	C224	A-5B
D103	A-1C	R218	A-5B	R418	B-1E	R541	B-3E	R677	B-5D	R817	B-1C	C225	B-5B
D401	A-2E	R219	A-5B	R419	B-1E	R555	B-2B	R678	A-5C	R818	B-1C	C226	A-5C

C302	A-4B	C409	B-1E	C609	B-4C	C688	A-5D	L309	B-2D	CN1	A-5D
C303	B-3B	C410	B-1E	C610	B-4C	C689	B-4C	L310	B-2E	CN2	A-5B
C304	B-3B	C411	B-2E	C611	B-4C	C690	B-4D	L311	A-4C	CN102	A-3D
C305	A-4B	C412	B-2E	C612	B-4C	C691	B-4D	L312	B-3C	CN104	B-2B
C306	B-3C	C413	B-2E	C613	B-4C	C692	B-4D	L313	A-2B	CN106	A-1C
C307	B-3B	C414	B-2E	C614	B-4C	C693	A-5D	L401	B-2E	CN108	A-4E
C308	A-4B	C415	A-2E	C615	B-4C	C694	A-5D	L501	A-3D	CN401	A-2E
C309	A-4B	C416	B-1D	C617	B-5E	C695	B-5C	L502	A-3D	CN402	A-2E
C310	B-3B	C417	A-2E	C619	B-5E	C696	A-4D	L511	A-3E	CN403	A-2D
C311	A-3B	C418	A-1E	C620	A-5D	C697	A-5C	L513	A-3D	CN501	A-3E
C312	A-3B	C419	B-1D	C621	A-5D	C698	B-5C	L601	A-4C	CN801	A-1D
C313	A-3B	C501	A-4E	C622	A-5D	C699	A-4D	L602	A-4C		
C314	A-3B	C502	A-4E	C623	A-5D	C700	A-4D	L603	A-4C	LA301	B-3B
C316	A-3C	C503	A-3E	C624	A-4D	C701	A-4D	L604	A-4B	LA302	B-4C
C317	A-3C	C505	B-4E	C625	A-4D	C702	A-4D	L605	B-4C	LA303	B-3B
C318	B-4C	C506	B-4E	C626	B-5D	C704	A-3C	L606	A-4C	LA401	B-1D
C319	B-3C	C507	B-4E	C627	A-4E	C706	B-5C	L608	B-5D	LA402	B-1D
C320	B-3D	C508	B-3E	C628	A-5D	C707	B-4E	L609	A-4E	LA403	B-1D
C321	B-3C	C509	B-3E	C629	A-5D	C708	B-4E	L610	A-5C	LA404	B-1D
C323	B-2C	C510	A-3E	C630	A-4D	C709	A-5E	L612	B-5C	LA601	B-4E
C324	B-2C	C511	B-3E	C631	B-5D	C710	B-5D	L613	A-4E	LA602	B-4E
C325	B-2C	C512	B-3E	C632	A-4D	C711	B-5E	L614	B-4D	LA603	B-4E
C326	A-2C	C513	B-4E	C633	B-4D	C712	B-5D	L615	B-4D	LA604	B-4E
C327	B-2C	C514	B-4E	C634	B-4D	C713	A-4D	L801	A-1D	LA605	B-4E
C328	B-2D	C515	B-4E	C635	A-4E	C714	A-4D	L802	A-1C	LA606	B-4E
C329	B-2D	C516	B-4E	C638	A-4D	C715	A-4E	L803	A-1C	LA607	B-4D
C330	A-2D	C517	B-4D	C639	B-5E	C716	B-4E	L804	A-1D		
C331	B-2D	C518	B-4D	C640	A-4E	C717	B-4D			RA101	A-1B
C332	A-2D	C519	B-4D	C641	A-4E	C718	B-5C	TP101	B-2B	RA102	A-1B
C333	A-2D	C520	B-4D	C642	A-5D	C719	A-4D	TP102	B-1C	RA103	A-1B
C334	A-3C	C521	A-3D	C643	A-5D	C720	A-4D	TP103	A-1B	RA104	A-1B
C335	A-2C	C522	A-3D	C644	A-5D	C721	A-4D	TP104	B-2C	RA105	A-1B
C336	A-2D	C523	B-4D	C645	A-5D	C722	A-4D	TP105	B-2C	RA106	A-1B
C337	A-2D	C524	B-4D	C646	A-5D	C738	B-3E	TP106	B-2B	RA107	A-1B
C338	B-2E	C525	B-4D	C647	A-5D	C739	A-3E	TP107	A-1B	RA108	A-1B
C339	A-2D	C526	B-4D	C648	A-5D	C801	A-1D	TP108	A-1B	RA401	A-1D
C340	A-2D	C527	B-4D	C649	B-4E	C802	A-1D	TP109	B-2B	RA402	B-2E
C341	A-2D	C528	B-3D	C650	A-4D	C803	A-1C	TP110	B-2B	RA403	B-2E
C342	A-2D	C529	A-3D	C651	A-4C	C804	A-1C	TP111	B-1B	RA601	A-4E
C343	A-2D	C531	B-3D	C652	A-4D	C805	A-1C	TP301	B-4C	RA602	A-4E
C344	A-3B	C532	A-3D	C653	A-4C	C806	A-1C	TP302	A-4B	RA603	A-4D
C345	B-2C	C533	A-3D	C654	A-4C	C807	A-1C	TP303	A-4B	RA604	A-4E
C346	A-4C	C534	A-3D	C655	A-4C	C808	B-1C	TP304	A-2B	RA605	A-4E
C347	B-3C	C537	B-3D	C656	A-4E	C809	B-1C	TP305	B-3B		
C348	B-3C	C538	B-3D	C657	B-4C	C810	B-1C	TP401	A-1E	X101	B-2C
C349	B-3C	C539	B-3E	C658	B-4C	C811	A-1C	TP402	A-1E	X301	A-4B
C350	B-3C	C540	B-3E	C659	B-4C	C812	A-1C	TP403	A-2E	X401	A-1E
C351	A-4C	C541	B-3E	C660	B-4C	C813	A-1D	TP404	A-2E	X601	A-4C
C352	B-3C	C542	B-3E	C661	A-4C	C814	A-1C	TP405	A-2E	X602	B-4D
C353	A-2B	C543	B-3E	C662	B-4C	C815	B-1D	TP406	A-1E	X603	B-4D
C354	A-2B	C544	B-3E	C663	B-5C	C816	A-1C	TP407	A-1E		
C355	A-2C	C545	B-3E	C664	B-5C	C817	A-1C	TP408	A-1E	LC101	B-3E
C356	A-2C	C546	B-3E	C665	A-5D	C818	B-1D	TP409	A-1E	LC102	A-3E
C358	A-2C	C547	A-3D	C666	B-4C	C819	A-1D	TP410	A-1E	LC103	B-3D
C359	A-2B	C555	A-3D	C667	B-4C	C820	A-1D	TP411	A-1E	LC104	B-3D
C360	A-2B	C579	A-3E	C668	B-4C	C821	B-1D	TP601	B-5D	LC105	A-3C
C361	A-2B	C580	A-4E	C669	B-5C	C822	B-1D	TP602	B-5D	LC301	A-3B
C362	B-3B	C581	A-3E	C672	A-4C					LC302	A-2B
C363	B-3B	C582	A-4E	C673	B-5C	L111	A-3E	K101	A-1C	LC303	A-3B
C364	A-2C	C583	A-3E	C674	B-5C	L112	A-3E	K102	A-1C	LC501	B-3E
C365	A-3C	C584	A-4E	C675	A-4C	L113	B-3D	K301	B-3B	LC502	B-3E
C366	A-2C	C590	B-4D	C676	A-5C	L114	A-3D	K303	A-2D		
C367	B-3C	C591	B-4D	C677	A-5C	L115	A-3D	K401	B-2D		
C368	A-2B	C592	B-4D	C678	B-5C	L201	A-4B	K402	A-1D		
C369	A-3B	C593	B-4D	C679	B-5C	L202	A-4B	K403	A-1D		
C401	B-2E	C601	B-4C	C680	A-5C	L301	A-4B	K404	A-1D		
C402	A-2E	C602	B-4C	C681	B-5C	L302	A-3B	K601	A-3D		
C403	A-2E	C603	B-4C	C682	A-5C	L303	B-3D	K602	A-4D		
C404	A-1E	C604	A-4C	C683	A-5C	L304	A-3C	K603	A-4D		
C405	B-1E	C605	B-4C	C684	A-5C	L305	A-2C	K604	A-4D		
C406	A-1D	C606	B-4C	C685	A-5C	L306	A-2C	K605	A-4D		
C407	B-1D	C607	B-4C	C686	A-5C	L307	A-2D	K801	A-1C		
C408	A-1D	C608	B-4C	C687	A-5C	L308	B-2D				

— INNER PATTERN (SIDE A

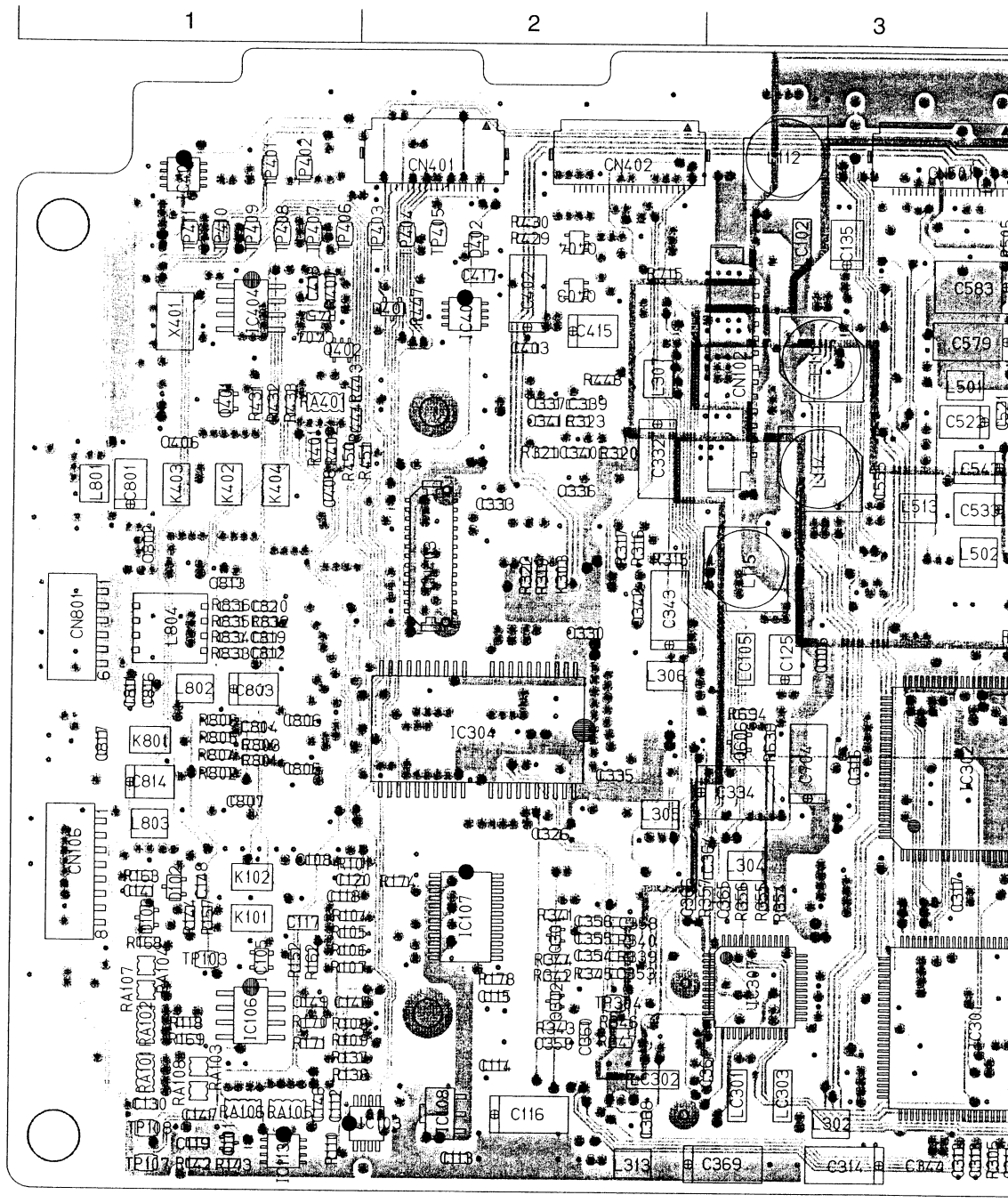

— INNER PATTERN (SIDE

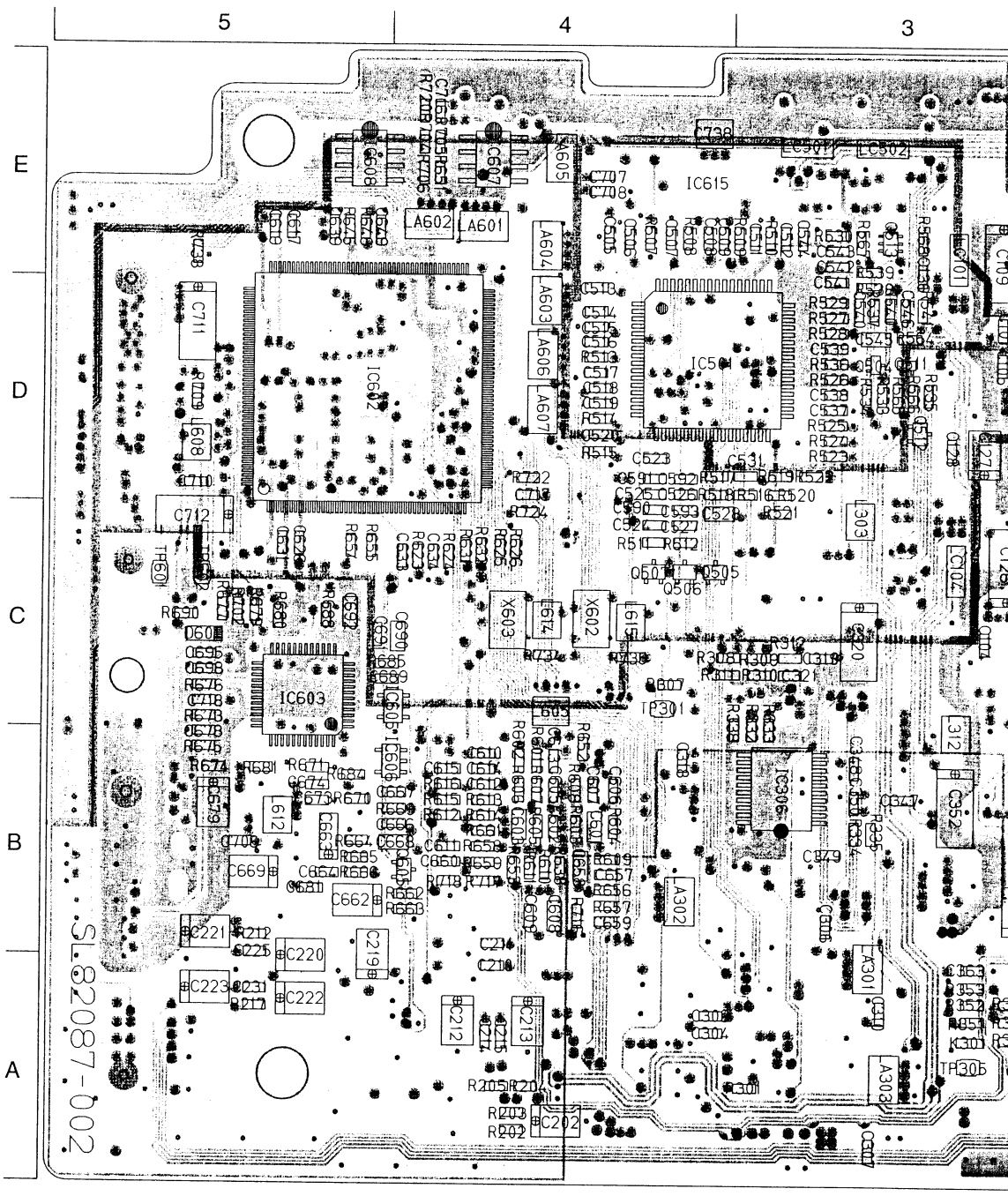

– INNER PATTERN (SIDE A) –

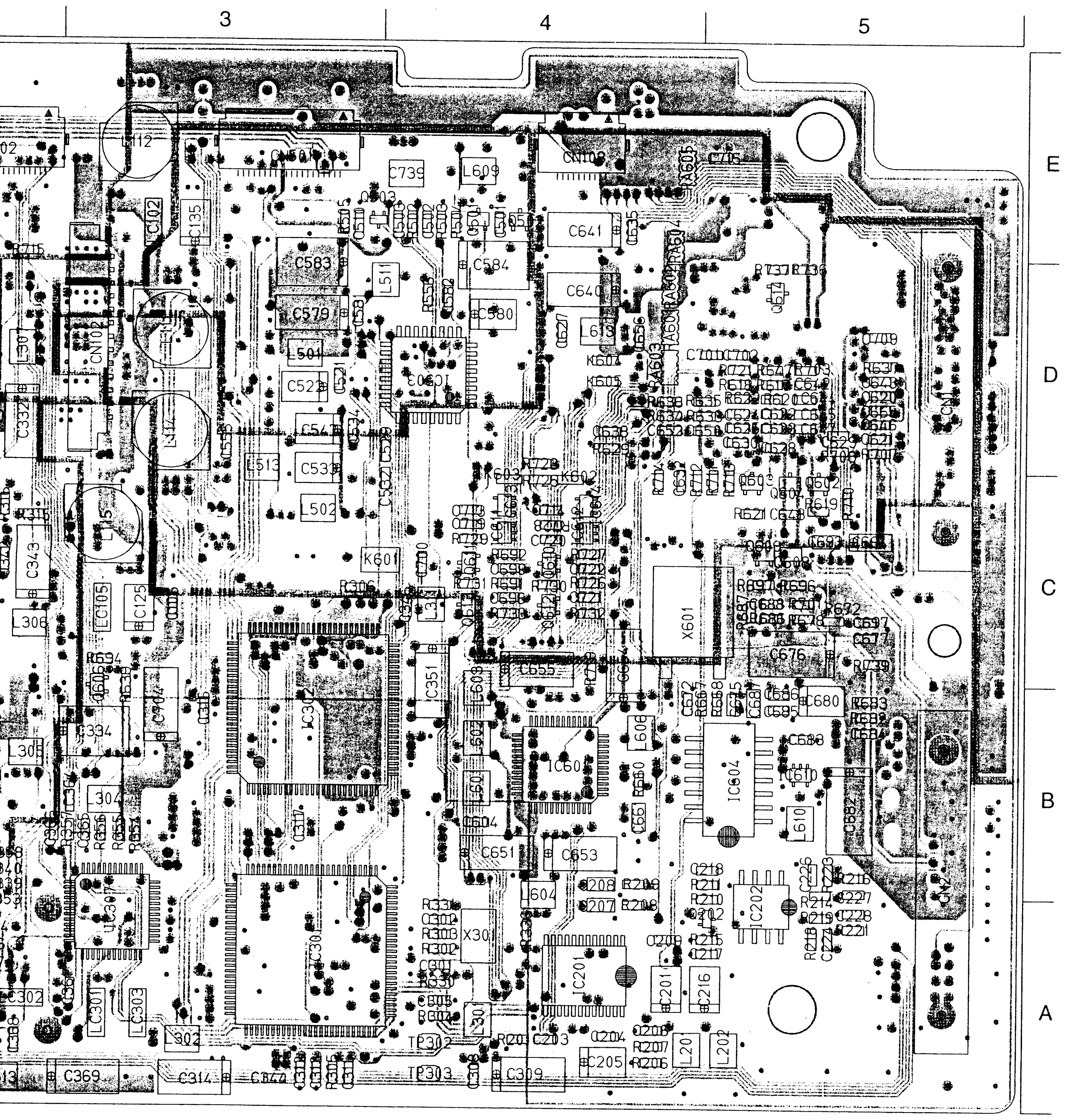

– INNER PATTERN (SIDE B) –

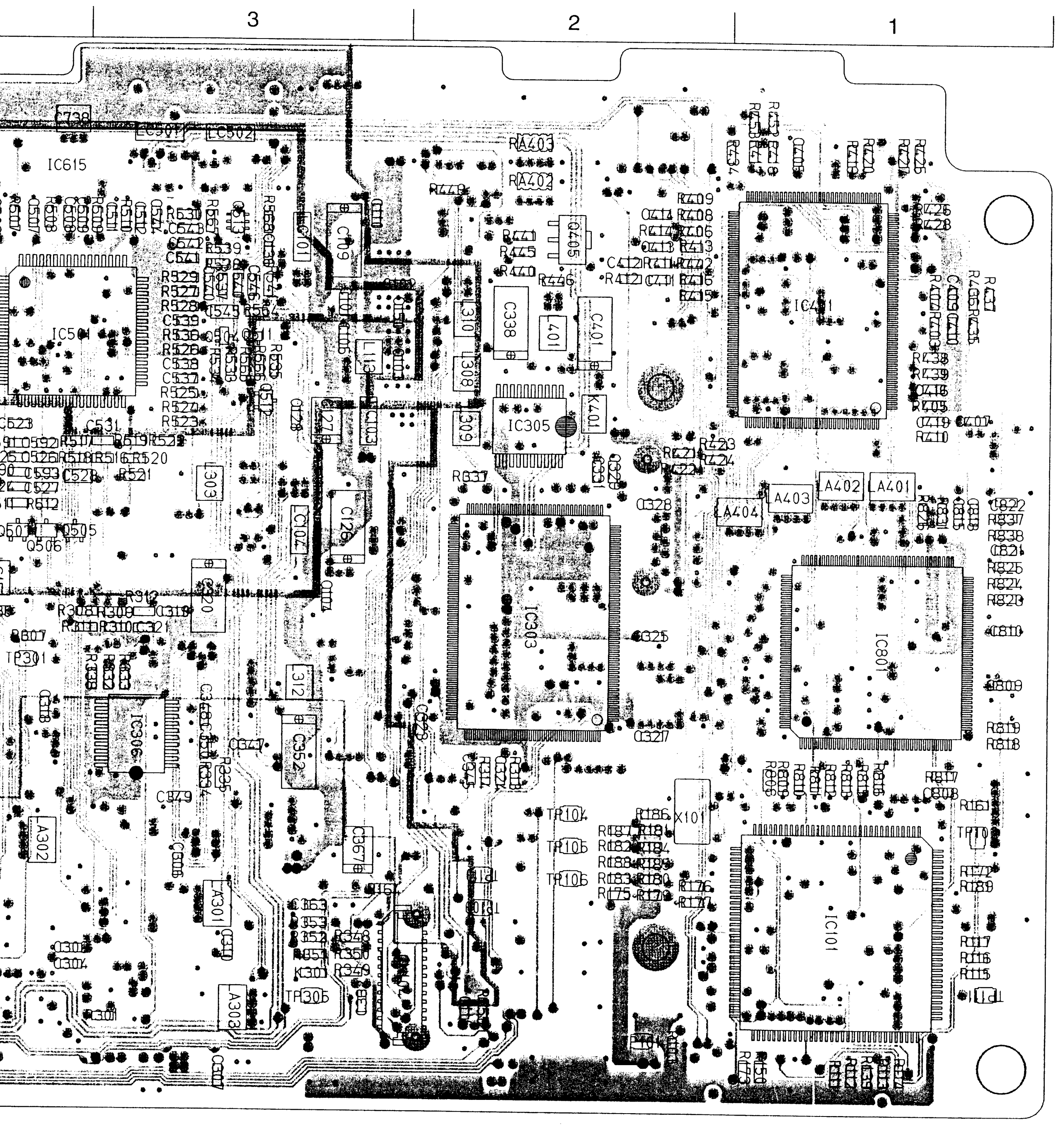

C227	A-5B	C405	B-1E	C605	B-4C	C684	A-5C	L305	A-2C	K604	A-4D
C228	A-5B	C406	A-1D	C606	B-4C	C685	A-5C	L306	A-2C	K605	A-4D
C231	B-5B	C407	B-1D	C607	B-4C	C686	A-5C	L307	A-2D	K801	A-1C
C301	A-4B	C408	A-1D	C608	B-4C	C687	A-5C	L308	B-2D		
C302	A-4B	C409	B-1E	C609	B-4C	C688	A-5D	L309	B-2D	CN1	A-5D
C303	B-3B	C410	B-1E	C610	B-4C	C689	B-4C	L310	B-2E	CN2	A-5B
C304	B-3B	C411	B-2E	C611	B-4C	C690	B-4D	L311	A-4C	CN102	A-3D
C305	A-4B	C412	B-2E	C612	B-4C	C691	B-4D	L312	B-3C	CN104	B-2B
C306	B-3C	C413	B-2E	C613	B-4C	C692	B-4D	L313	A-2B	CN106	A-1C
C307	B-3B	C414	B-2E	C614	B-4C	C693	A-5D	L401	B-2E	CN108	A-4E
C308	A-4B	C415	A-2E	C615	B-4C	C694	A-5D	L501	A-3D	CN401	A-2E
C309	A-4B	C416	B-1D	C617	B-5E	C695	B-5C	L502	A-3D	CN402	A-2E
C310	B-3B	C417	A-2E	C619	B-5E	C696	A-4D	L511	A-3E	CN403	A-2D
C311	A-3B	C418	A-1E	C620	A-5D	C697	A-5C	L513	A-3D	CN501	A-3E
C312	A-3B	C419	B-1D	C621	A-5D	C698	B-5C	L601	A-4C	CN801	A-1D
C313	A-3B	C501	A-4E	C622	A-5D	C699	A-4D	L602	A-4C		
C314	A-3B	C502	A-4E	C623	A-5D	C700	A-4D	L603	A-4C	LA301	B-3B
C316	A-3C	C503	A-3E	C624	A-4D	C701	A-4D	L604	A-4B	LA302	B-4C
C317	A-3C	C505	B-4E	C625	A-4D	C702	A-4D	L605	B-4C	LA303	B-3B
C318	B-4C	C506	B-4E	C626	B-5D	C704	A-3C	L606	A-4C	LA401	B-1D
C319	B-3C	C507	B-4E	C627	A-4E	C706	B-5C	L608	B-5D	LA402	B-1D
C320	B-3D	C508	B-3E	C628	A-5D	C707	B-4E	L609	A-4E	LA403	B-1D
C321	B-3C	C509	B-3E	C629	A-5D	C708	B-4E	L610	A-5C	LA404	B-1D
C323	B-2C	C510	A-3E	C630	A-4D	C709	A-5E	L612	B-5C	LA601	B-4E
C324	B-2C	C511	B-3E	C631	B-5D	C710	B-5D	L613	A-4E	LA602	B-4E
C325	B-2C	C512	B-3E	C632	A-4D	C711	B-5E	L614	B-4D	LA603	B-4E
C326	A-2C	C513	B-4E	C633	B-4D	C712	B-5D	L615	B-4D	LA604	B-4E
C327	B-2C	C514	B-4E	C634	B-4D	C713	A-4D	L801	A-1D	LA605	B-4E
C328	B-2D	C515	B-4E	C635	A-4E	C714	A-4D	L802	A-1C	LA606	B-4E
C329	B-2D	C516	B-4E	C638	A-4D	C715	A-4E	L803	A-1C	LA607	B-4D
C330	A-2D	C517	B-4D	C639	B-5E	C716	B-4E	L804	A-1D		
C331	B-2D	C518	B-4D	C640	A-4E	C717	B-4D			RA101	A-1B
C332	A-2D	C519	B-4D	C641	A-4E	C718	B-5C	TP101	B-2B	RA102	A-1B
C333	A-2D	C520	B-4D	C642	A-5D	C719	A-4D	TP102	B-1C	RA103	A-1B
C334	A-3C	C521	A-3D	C643	A-5D	C720	A-4D	TP103	A-1B	RA104	A-1B
C335	A-2C	C522	A-3D	C644	A-5D	C721	A-4D	TP104	B-2C	RA105	A-1B
C336	A-2D	C523	B-4D	C645	A-5D	C722	A-4D	TP105	B-2C	RA106	A-1B
C337	A-2D	C524	B-4D	C646	A-5D	C738	B-3E	TP106	B-2B	RA107	A-1B
C338	B-2E	C525	B-4D	C647	A-5D	C739	A-3E	TP107	A-1B	RA108	A-1B
C339	A-2D	C526	B-4D	C648	A-5D	C801	A-1D	TP108	A-1B	RA401	A-1D
C340	A-2D	C527	B-4D	C649	B-4E	C802	A-1D	TP109	B-2B	RA402	B-2E
C341	A-2D	C528	B-3D	C650	A-4D	C803	A-1C	TP110	B-2B	RA403	B-2E
C342	A-2D	C529	A-3D	C651	A-4C	C804	A-1C	TP111	B-1B	RA601	A-4E
C343	A-2D	C531	B-3D	C652	A-4D	C805	A-1C	TP301	B-4C	RA602	A-4E
C344	A-3B	C532	A-3D	C653	A-4C	C806	A-1C	TP302	A-4B	RA603	A-4D
C345	B-2C	C533	A-3D	C654	A-4C	C807	A-1C	TP303	A-4B	RA604	A-4E
C346	A-4C	C534	A-3D	C655	A-4C	C808	B-1C	TP304	A-2B	RA605	A-4E
C347	B-3C	C537	B-3D	C656	A-4E	C809	B-1C	TP305	B-3B		
C348	B-3C	C538	B-3D	C657	B-4C	C810	B-1C	TP401	A-1E	X101	B-2C
C349	B-3C	C539	B-3E	C658	B-4C	C811	A-1C	TP402	A-1E	X301	A-4B
C350	B-3C	C540	B-3E	C659	B-4C	C812	A-1C	TP403	A-2E	X401	A-1E
C351	A-4C	C541	B-3E	C660	B-4C	C813	A-1D	TP404	A-2E	X601	A-4C
C352	B-3C	C542	B-3E	C661	A-4C	C814	A-1C	TP405	A-2E	X602	B-4D
C353	A-2B	C543	B-3E	C662	B-4C	C815	B-1D	TP406	A-1E	X603	B-4D
C354	A-2B	C544	B-3E	C663	B-5C	C816	A-1C	TP407	A-1E	X801	B-1D
C355	A-2C	C545	B-3E	C664	B-5C	C817	A-1C	TP408	A-1E		
C356	A-2C	C546	B-3E	C665	A-5D	C818	B-1D	TP409	A-1E	LC101	B-3E
C358	A-2C	C547	A-3D	C666	B-4C	C819	A-1D	TP410	A-1E	LC102	A-3E
C359	A-2B	C555	A-3D	C667	B-4C	C820	A-1D	TP411	A-1E	LC103	B-3D
C360	A-2B	C579	A-3E	C668	B-4C	C821	B-1D	TP601	B-5D	LC104	B-3D
C361	A-2B	C580	A-4E	C669	B-5C	C822	B-1D	TP602	B-5D	LC105	A-3C
C362	B-3B	C581	A-3E	C672	A-4C					LC301	A-3B
C363	B-3B	C582	A-4E	C673	B-5C	L111	A-3E	K101	A-1C	LC302	A-2B
C364	A-2C	C583	A-3E	C674	B-5C	L112	A-3E	K102	A-1C	LC303	A-3B
C365	A-3C	C584	A-4E	C675	A-4C	L113	B-3D	K301	B-3B	LC501	B-3E
C366	A-2C	C590	B-4D	C676	A-5C	L114	A-3D	K303	A-2D	LC502	B-3E
C367	B-3C	C591	B-4D	C677	A-5C	L115	A-3D	K401	B-2D		
C368	A-2B	C592	B-4D	C678	B-5C	L201	A-4B	K402	A-1D		
C369	A-3B	C593	B-4D	C679	B-5C	L202	A-4B	K403	A-1D		
C401	B-2E	C601	B-4C	C680	A-5C	L301	A-4B	K404	A-1D		
C402	A-2E	C602	B-4C	C681	B-5C	L302	A-3B	K601	A-3D		
C403	A-2E	C603	B-4C	C682	A-5C	L303	B-3D	K602	A-4D		
C404	A-1E	C604	A-4C	C683	A-5C	L304	A-3C	K603	A-4D		

— INNER PATTERN (SIDE A) —

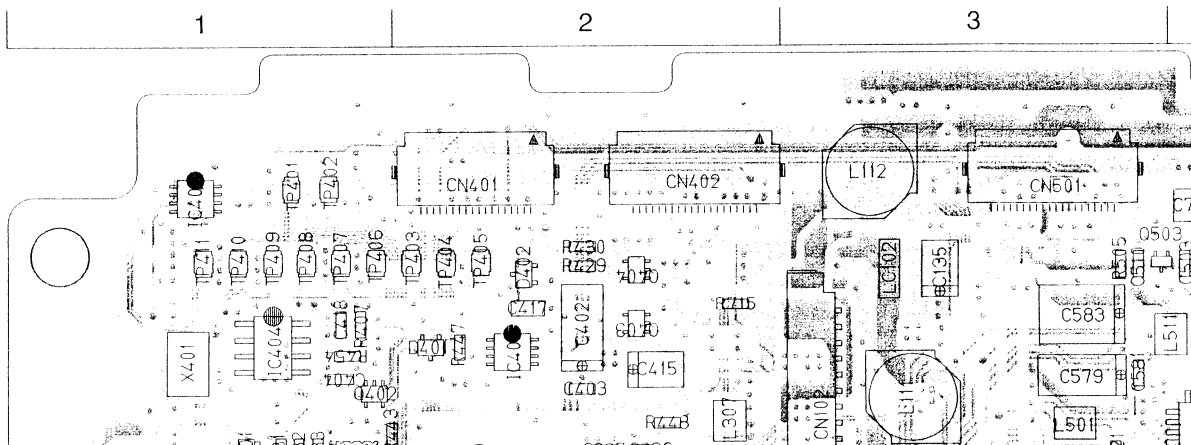

— INNER PATTERN (SIDE B)

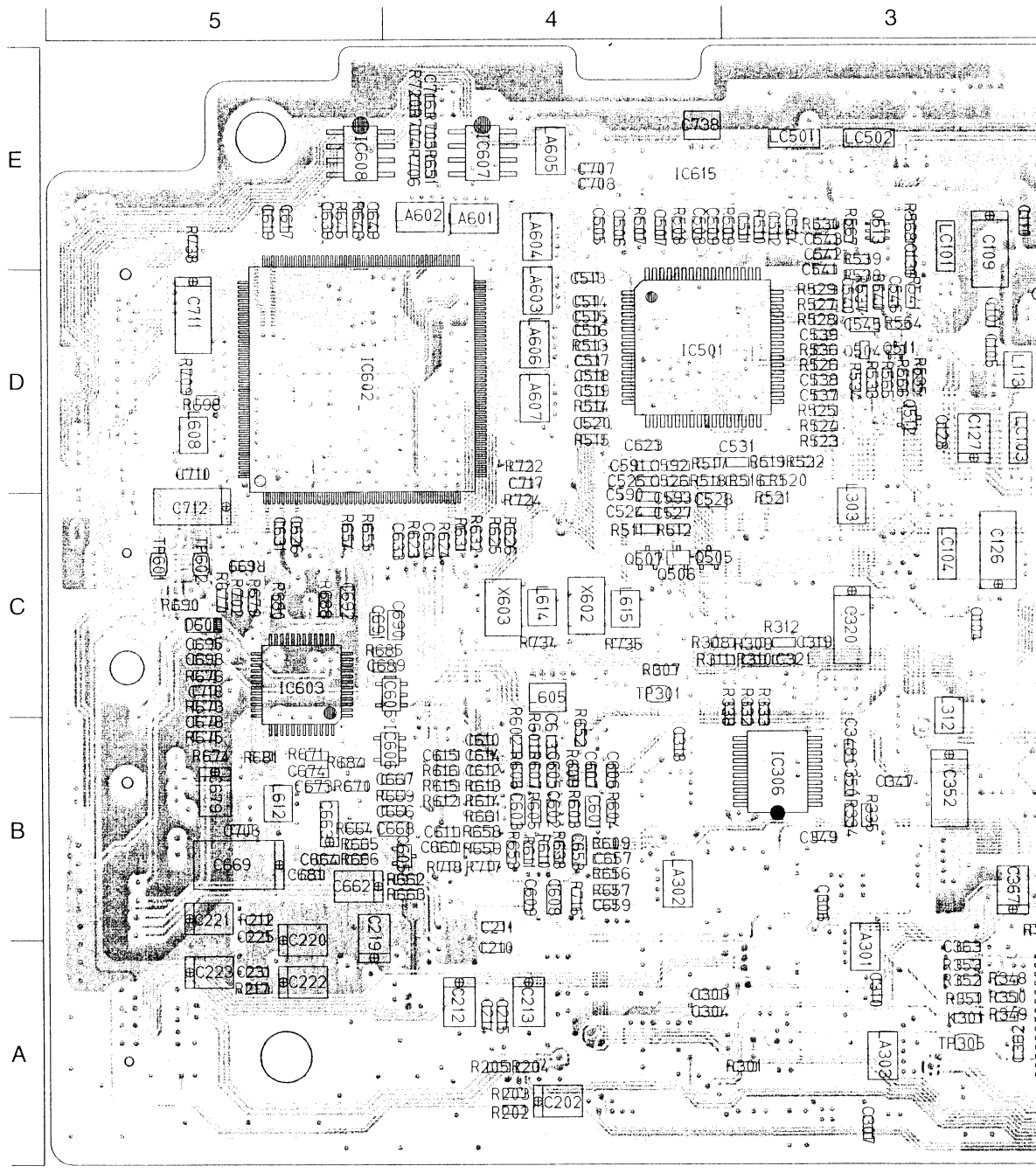

RN (SIDE A) —

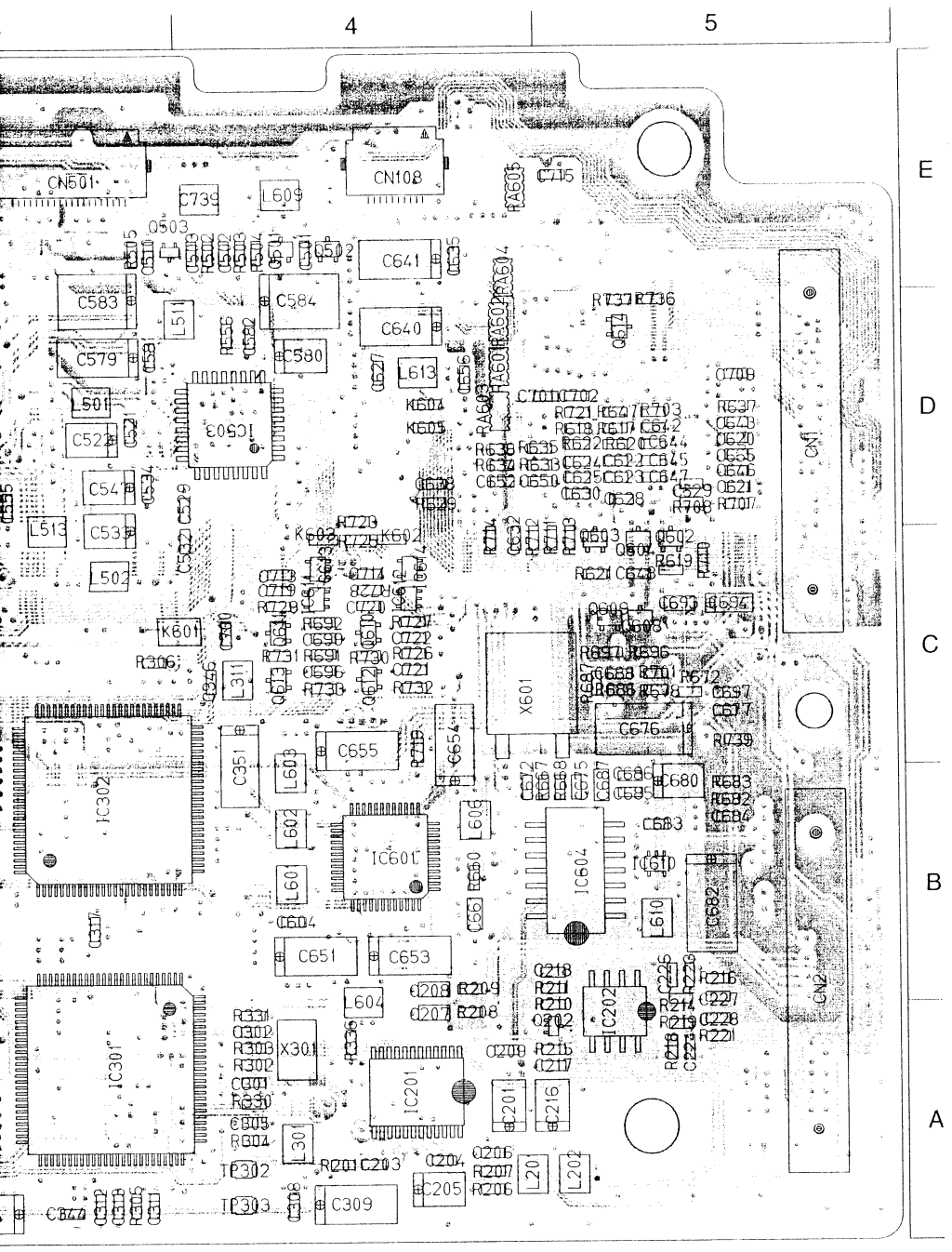

ATTERN (SIDE B) —

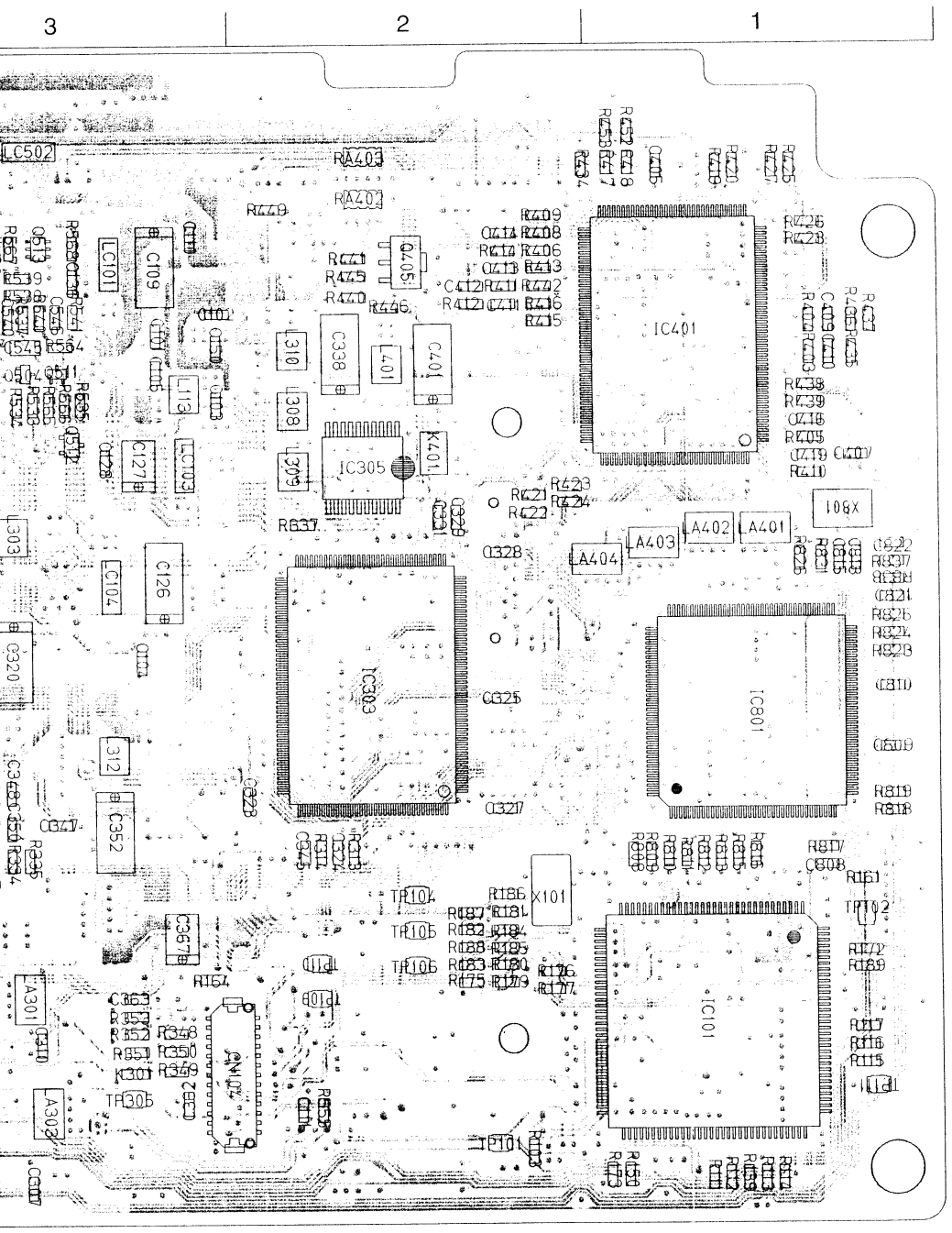

4.33 PR & MDA SCHEMATIC DIAGRAM (1/2) [0][1]

— PR —

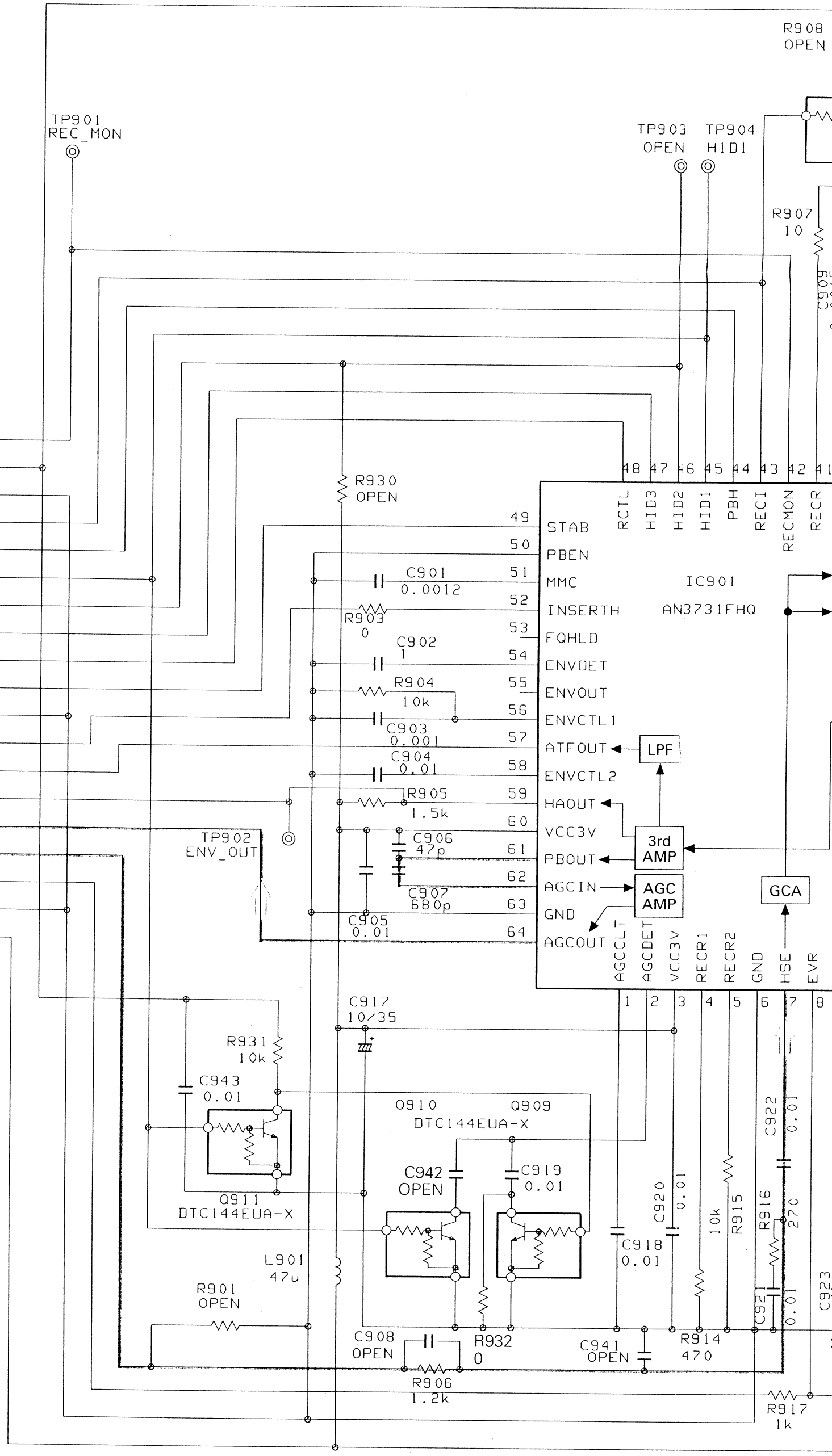

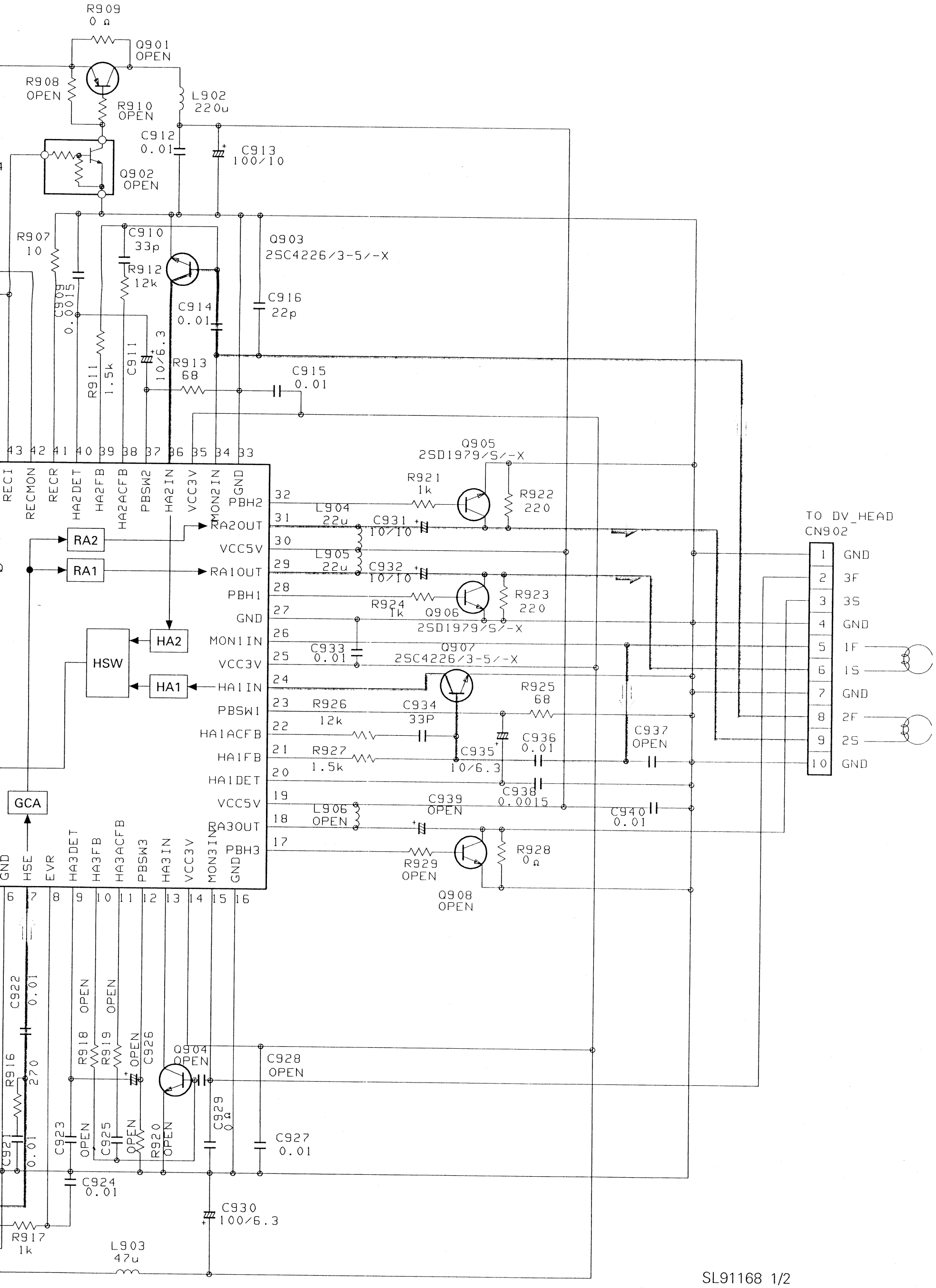
R909
0 Ω
Q901
OPEN
R908
OPEN
R910
OPEN
L902
220u
C912
0.01
C913
100/10
Q902
OPEN
R907
10
C910
33p
R912
12k
C914
0.01
C911
10/6.3
R913
68
C915
0.01
R911
1.5k
C909
0.0015
C908
0.01
Q903
2SC4226/3-5/-X
C916
22p
Q905
2SD1979/S/-X
R921
1k
R922
220
L904
22u
C931
10/10
L905
22u
C932
10/10
R923
220
R924
1k
Q906
2SD1979/S/-X
C933
0.01
Q907
2SC4226/3-5/-X
R925
68
R926
12k
C934
33P
C936
0.01
C935
10/6.3
R927
1.5k
C938
0.0015
C939
OPEN
C940
0.01
L906
OPEN
R928
0 Ω
R929
OPEN
Q908
OPEN
C937
OPEN
TO DV_HEAD
CN902
1 GND
2 3F
3 3S
4 GND
5 1F
6 1S
7 GND
8 2F
9 2S
10 GND
43 42 41 40 39 38 37 36 35 34 33
RECI
RECMON
RECR
HA2DET
HA2FB
HA2ACFB
PBSW2
HA2IN
VCC3V
MON2IN
PGND
32 PBH2
31 RA2OUT
30 VCC5V
29 RA1OUT
28 PBH1
27 GND
26 MON1IN
25 VCC3V
24 HA1IN
23 PBSW1
22 HA1ACFB
21 HA1FB
20 HA1DET
19 VCC5V
18 RA3OUT
17 PBH3
RA2
RA1
HA2
HA1
HSW
GCA
6 7 8 9 10 11 12 13 14 15 16
GND
HSE
EVR
HA3DET
HA3FB
HA3ACFB
PBSW3
HA3IN
VCC3V
MON3IN
GND
C922
0.01
R916
270
C921
0.01
R917
1k
C923
OPEN
C924
0.01
R918 OPEN
R919 OPEN
C925
OPEN
C926
OPEN
R920
OPEN
Q904
OPEN
C928
OPEN
C929
0.01
C927
0.01
C930
100/6.3
L903
47u

SL91168 1/2

• PR(Pre Rec) & MDA(Motor Drive Amp.) SCHEMATIC DIAGRAM (2/2) 01

— MDA —

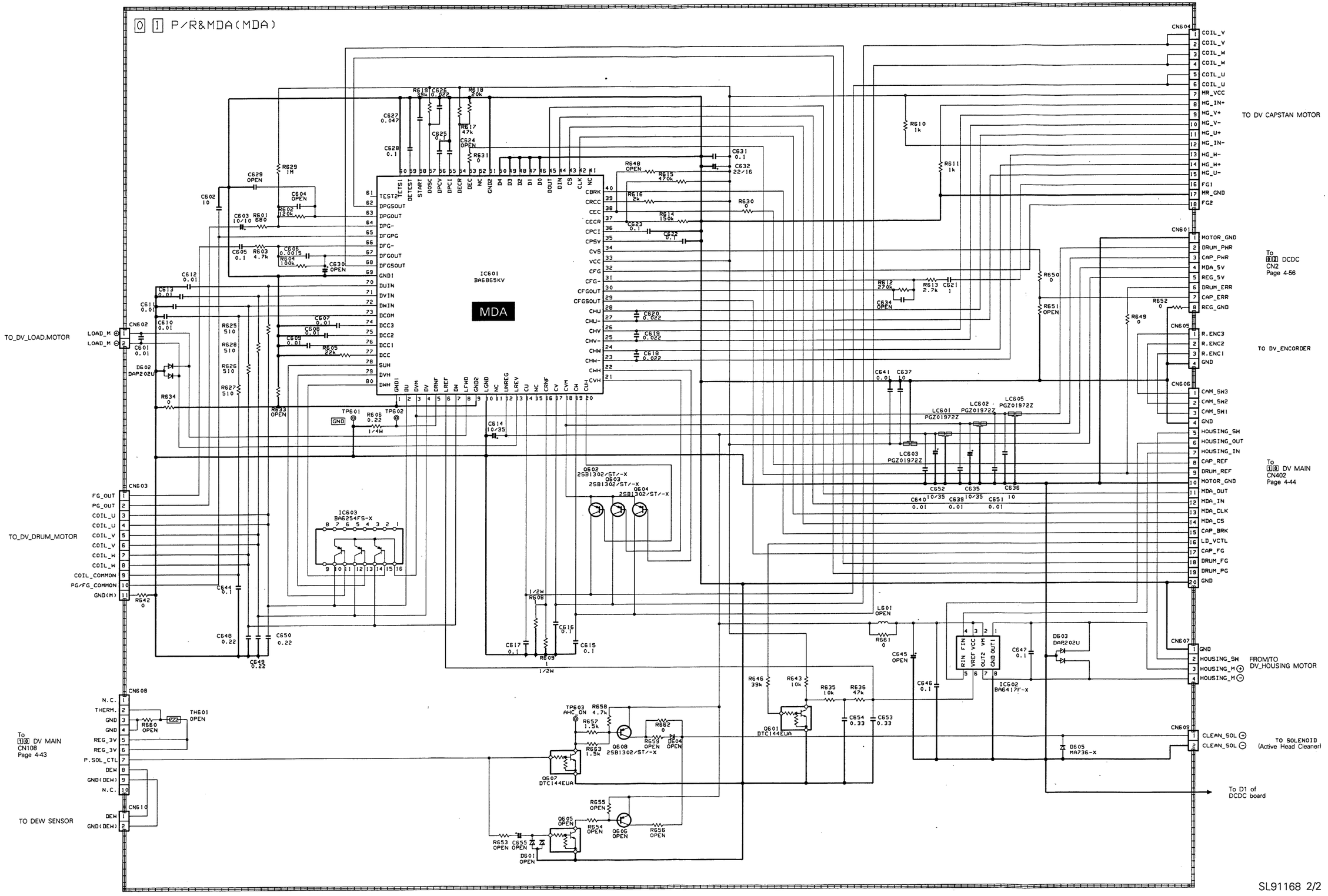

4.34 PR & MDA CIRCUIT BOARD

— SIDE A —

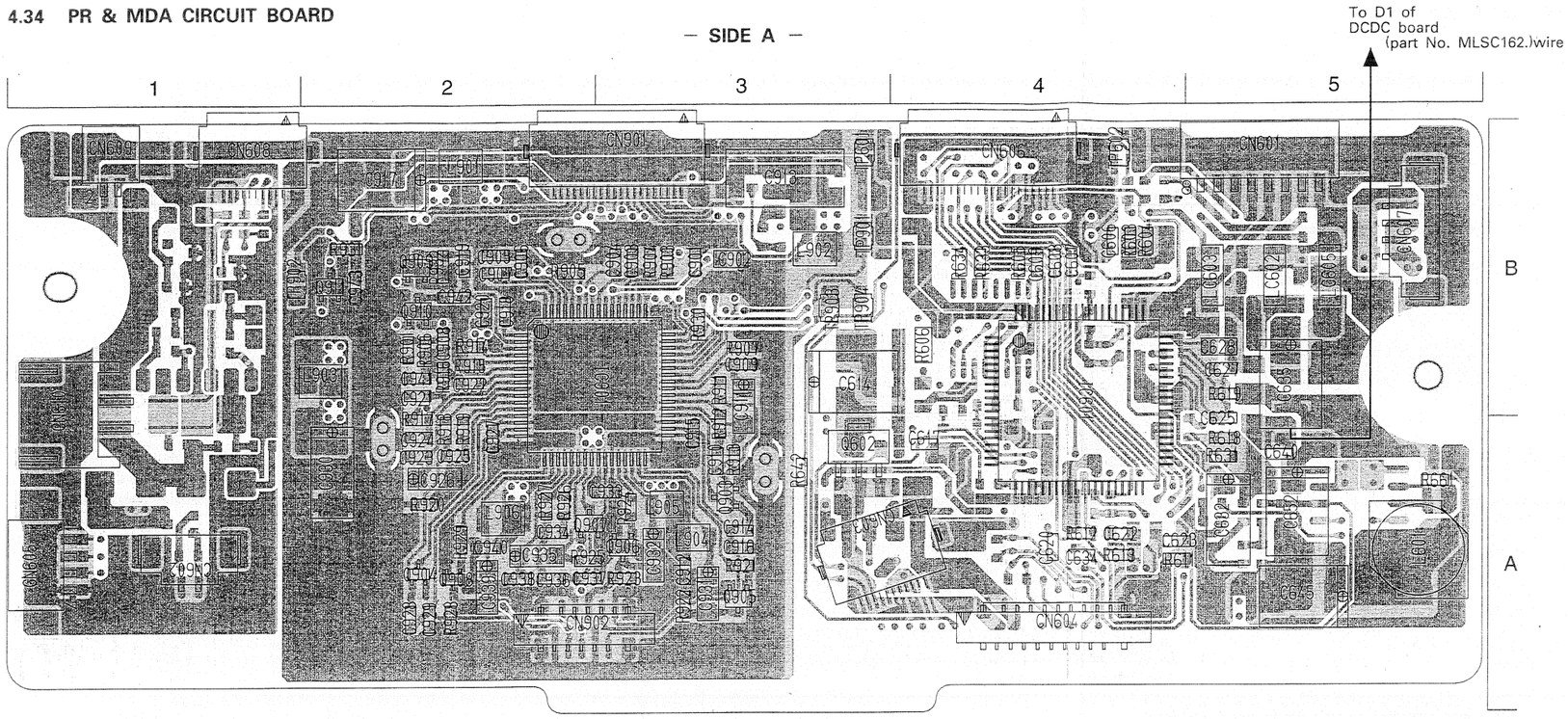

— SIDE B —

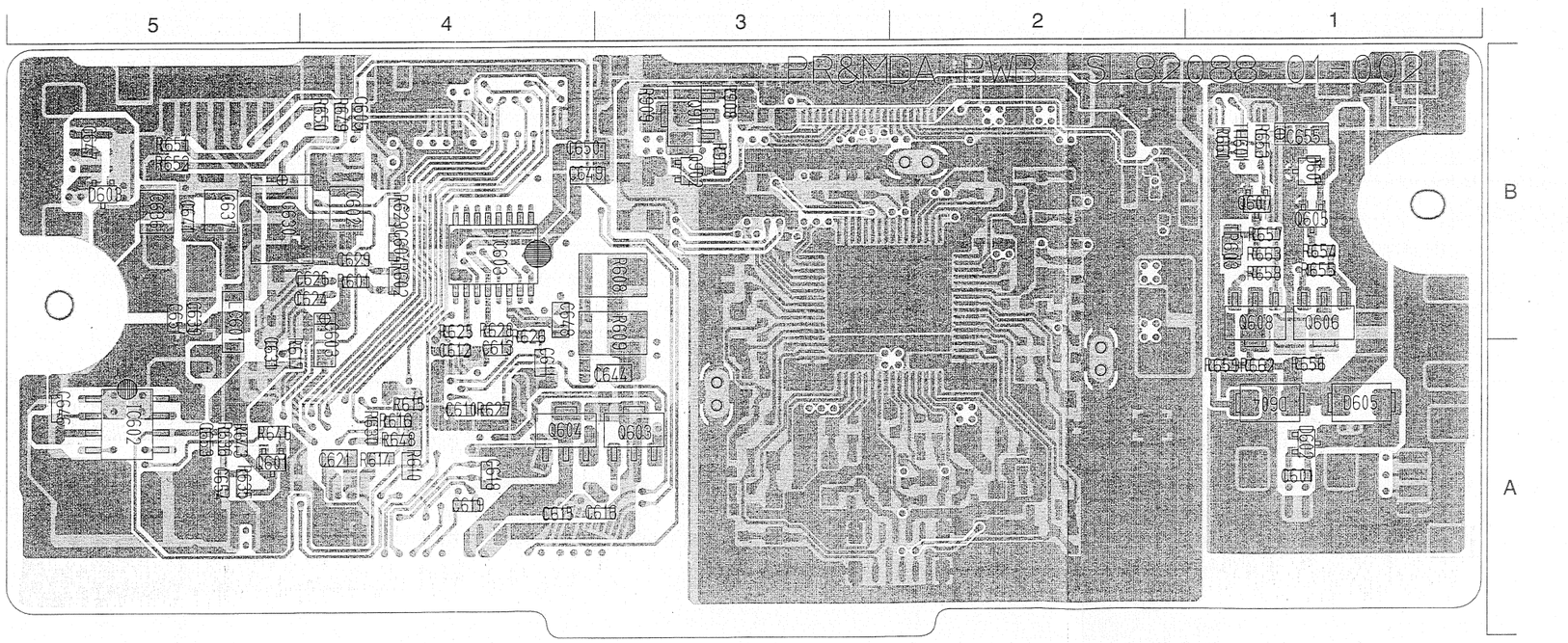

● **ADDRESS TABLE OF BOARD PARTS**

Each address may have an address error by one interval.

Side — A-1C — Y axis / X axis

IC601	A-4B	R651	B-5B	C622	A-4A	C937	A-2A
IC602	B-5A	R652	B-5B	C623	A-4A	C938	A-2A
IC603	B-4B	R653	B-1B	C624	B-4B	C939	A-2A
IC901	A-3B	R654	B-1B	C625	A-5A	C940	A-2A
		R655	B-1B	C626	B-4B	C941	A-2B
Q601	B-5A	R656	B-1A	C627	A-5B	C942	A-2B
Q602	A-3A	R657	B-1B	C628	A-5B	C943	A-2B
Q603	B-3A	R658	B-1B	C629	B-4B		
Q604	B-4A	R659	B-1A	C630	B-5B	L601	A-5A
Q605	B-1B	R660	B-1B	C631	B-5A	L901	A-2B
Q606	B-1B	R661	A-5A	C632	A-5A	L902	A-3B
Q607	B-1B	R662	B-1A	C634	A-4A	L903	A-2B
Q608	B-1B	R663	B-1B	C635	A-5B	L904	A-3A
Q901	B-3B	R901	A-2B	C636	B-5B	L905	A-3A
Q902	B-3B	R903	A-3B	C637	B-5B	L906	A-2A
Q903	A-3A	R904	A-3B	C639	B-5B		
Q904	A-2A	R905	A-2B	C640	A-5A	TP601	A-3B
Q905	A-3A	R906	A-2B	C641	B-5B	TP602	A-4B
Q906	A-3A	R907	A-3B	C644	B-3A	TP603	B-1B
Q907	A-2A	R908	B-3B	C645	A-5A	TP901	A-3B
Q908	A-2A	R909	B-3B	C646	B-5A	TP902	A-1B
Q909	A-2B	R910	B-3B	C647	B-5B	TP903	A-3B
Q910	A-2B	R911	A-3B	C648	B-4B	TP904	A-3B
Q911	A-2B	R912	A-3A	C649	B-4B		
		R913	A-3A	C650	B-4B	TH601	B-1B
D601	B-1B	R914	A-2B	C651	B-5B		
D602	B-1A	R915	A-2B	C652	A-5A	CN601	A-5B
D603	B-5B	R916	A-2B	C653	B-5A	CN602	A-1A
D604	B-1A	R917	A-2B	C654	B-5A	CN603	A-3A
D605	B-1A	R918	A-2A	C655	B-1B	CN604	A-4A
		R919	A-2A	C901	A-3B	CN605	A-1A
R601	B-4B	R920	A-2A	C902	A-3B	CN606	A-4B
R602	B-4B	R921	A-3A	C903	A-3B	CN607	A-5B
R603	A-4B	R922	A-3A	C904	A-3B	CN608	A-1B
R604	A-4B	R923	A-3A	C905	A-2B	CN609	A-1B
R605	A-4B	R924	A-3A	C906	A-2B	CN610	A-1B
R606	A-4B	R925	A-2A	C907	A-2B	CN901	A-3B
R608	B-3B	R926	A-2A	C908	A-2B	CN902	A-2A
R609	B-3B	R927	A-2A	C909	A-3B		
R610	B-4A	R928	A-2A	C910	A-3A	LC601	B-5B
R611	A-4A	R929	A-2A	C911	A-3B	LC602	A-5B
R612	A-4A	R930	A-3B	C912	A-3A	LC603	A-5B
R613	A-4A	R931	A-2B	C913	A-3B	LC605	A-5B
R614	B-4A	R932	A-2B	C914	A-3A		
R615	B-4A			C915	A-3A		
R616	B-4A	C601	B-1A	C916	A-3A		
R617	B-5A	C602	B-4B	C917	A-2B		
R618	A-5A	C603	B-4B	C918	A-2B		
R619	A-5B	C604	B-4B	C919	A-2B		
R625	B-4B	C605	B-4B	C920	A-2B		
R626	B-4B	C606	A-4B	C921	A-2B		
R627	B-4A	C607	A-4B	C922	A-2B		
R628	B-4B	C608	A-4B	C923	A-2A		
R629	B-4B	C609	A-4B	C924	A-2A		
R630	B-4A	C610	B-4A	C925	A-2A		
R631	A-5A	C611	B-4A	C926	A-2A		
R633	A-4B	C612	B-4A	C927	A-2A		
R634	A-4B	C613	B-4A	C928	A-2A		
R635	B-5A	C614	A-3B	C929	A-2A		
R636	B-5A	C615	B-4A	C930	A-2A		
R642	A-3A	C616	B-3A	C931	A-3A		
R643	B-5A	C617	A-4A	C932	A-3A		
R646	B-5A	C618	B-4A	C933	A-3A		
R648	B-4A	C619	B-4A	C934	A-2A		
R649	B-4B	C620	A-4A	C935	A-2A		
R650	B-4B	C621	B-4A	C936	A-2A		

4-54

4.35 ROM, CONN. SCHEMATIC DIAGRAM 03 / 04

• ROM 03

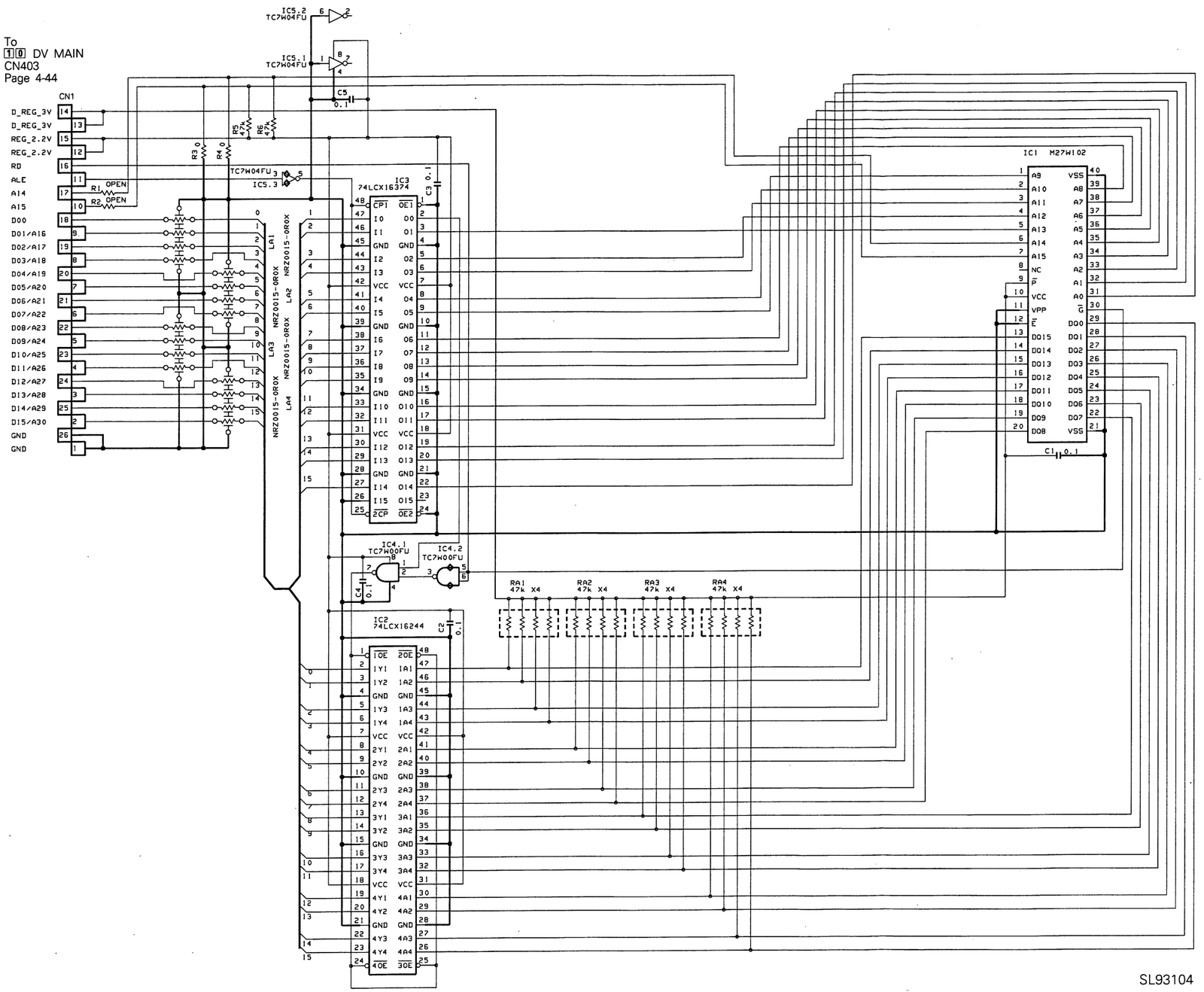

SL93104

• CONN. 04

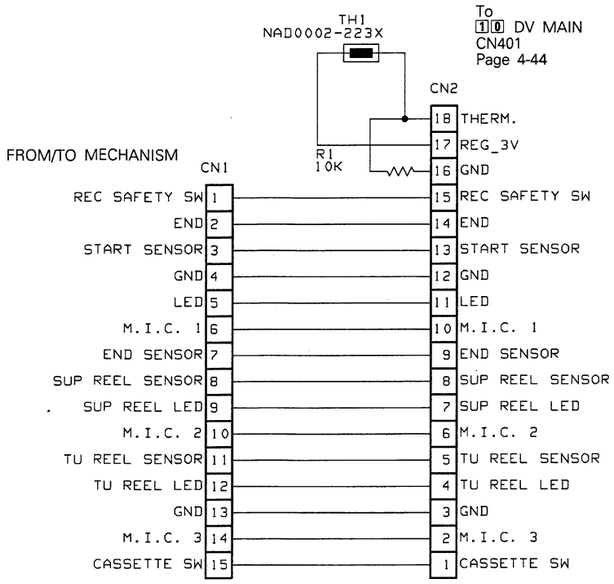

SL94020

IDE-V27525 / DRUCK: 49

4.36 DCDC SCHEMATIC DIAGRAM 02

To C635 of PR&MDA board

✳ : Not mounted.

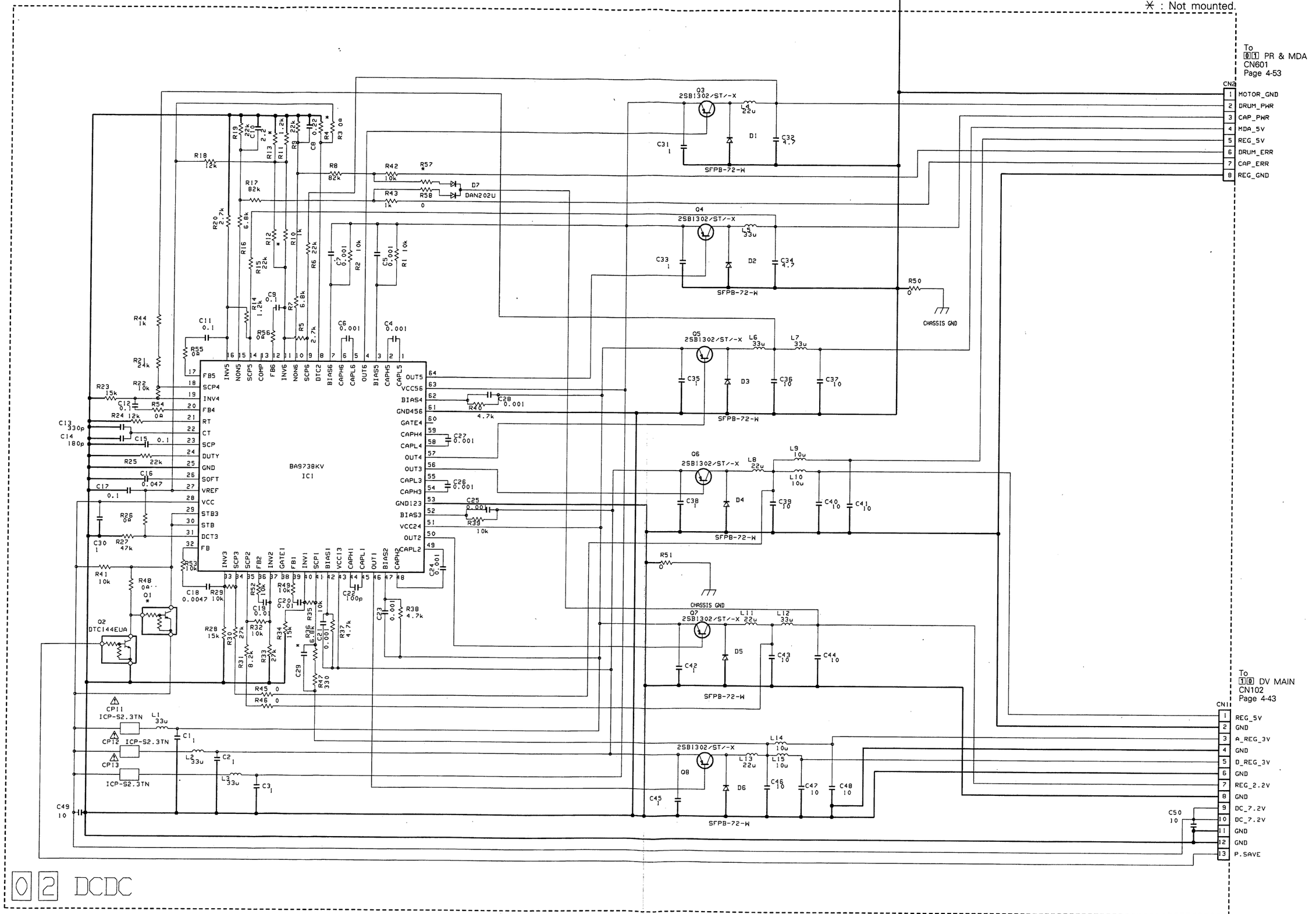

4-56

4.37 DCDC, ROM, CONN. CIRCUIT BOARD

· DCDC

— SIDE A —

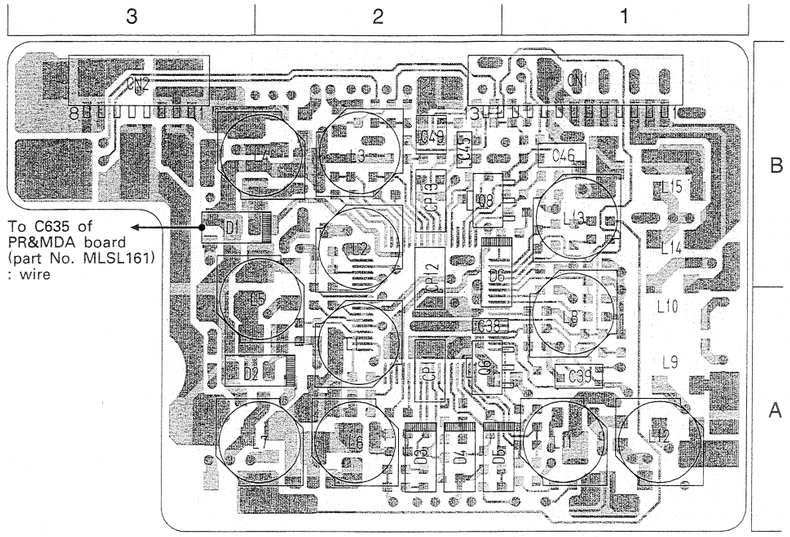

— SIDE B —

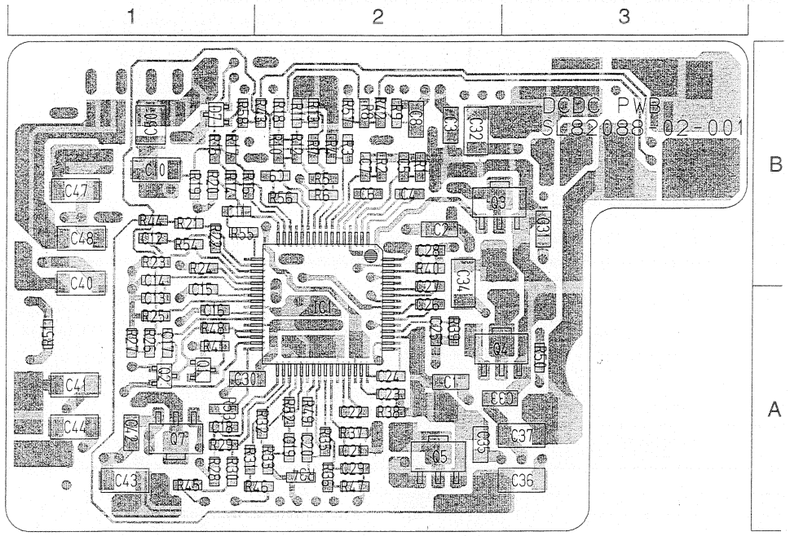

● **ADDRESS TABLE OF BOARD PARTS**
Each address may have an address error by one interval.

Side — A-1C (Y axis, X axis)

IC1	B-2A	R29	B-1A	C17	B-1A	L13	A-1B
		R30	B-1A	C18	B-1A	L14	A-1B
Q1	B-1A	R31	B-1A	C19	B-2A	L15	A-1B
Q2	B-1A	R32	B-2A	C20	B-2A		
Q3	B-3B	R33	B-2A	C21	B-2A	CP11	A-2A
Q4	B-3A	R34	B-2A	C22	B-2A	CP12	A-2B
Q5	B-2A	R35	B-2A	C23	B-2A	CP13	A-2B
Q6	A-2A	R36	B-2A	C24	B-2A		
Q7	B-1A	R37	B-2A	C25	B-2A	CN1	A-1B
Q8	A-2B	R38	B-2A	C26	B-2A	CN2	A-3B
		R39	B-2A	C27	B-2B		
D1	A-3B	R40	B-2B	C28	B-2B		
D2	A-2A	R41	B-1A	C29	B-2A		
D3	A-2A	R42	B-2B	C30	B-1A		
D4	A-2A	R43	B-2B	C31	B-3B		
D5	A-1A	R44	B-1B	C32	B-2B		
D6	A-1B	R45	B-1A	C33	B-3A		
D7	B-1B	R46	B-2A	C34	B-2B		
		R47	B-2A	C35	B-2A		
R1	B-2B	R48	B-1A	C36	B-3A		
R2	B-2B	R49	B-2A	C37	B-3A		
R3	B-2B	R50	B-3A	C38	A-2A		
R4	B-2B	R51	B-1A	C39	A-1A		
R5	B-2B	R52	B-2A	C40	B-1B		
R6	B-2B	R53	B-1A	C41	B-1A		
R7	B-2B	R54	B-1B	C42	B-1A		
R8	B-2B	R55	B-1B	C43	B-1A		
R9	B-2B	R56	B-2B	C44	B-1A		
R10	B-2B	R57	B-2B	C45	A-2B		
R11	B-2B	R58	B-1B	C46	A-1B		
R12	B-2B			C47	B-1B		
R13	B-2B	C1	B-2A	C48	B-1B		
R14	B-1B	C2	B-2B	C49	A-2B		
R15	B-1B	C3	B-2B	C50	B-1B		
R16	B-1B	C4	B-2B				
R17	B-1B	C5	B-2B	L1	A-2A		
R18	B-2B	C6	B-2B	L2	A-2B		
R19	B-1B	C7	B-2B	L3	A-2B		
R20	B-1B	C8	B-2B	L4	A-2B		
R21	B-1B	C9	B-2B	L5	A-2A		
R22	B-1B	C10	B-1B	L6	A-2A		
R23	B-1B	C11	B-1B	L7	A-2A		
R24	B-1B	C12	B-1B	L8	A-1A		
R25	B-1A	C13	B-1A	L9	A-1A		
R26	B-1A	C14	B-1B	L10	A-1A		
R27	B-1A	C15	B-1B	L11	A-1A		
R28	B-1A	C16	B-1A	L12	A-1A		

· ROM

— SIDE A —

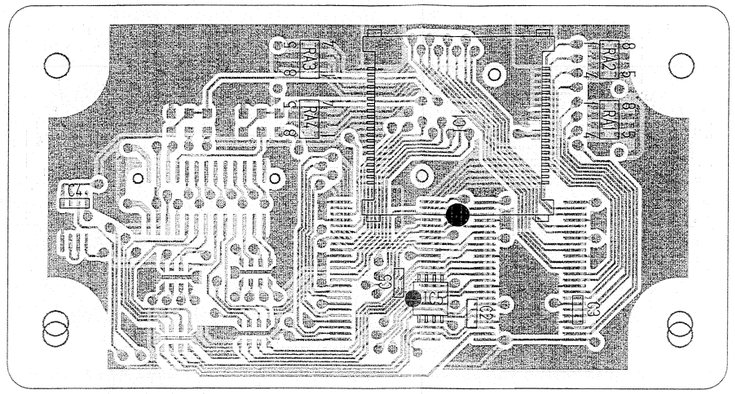

— SIDE B —

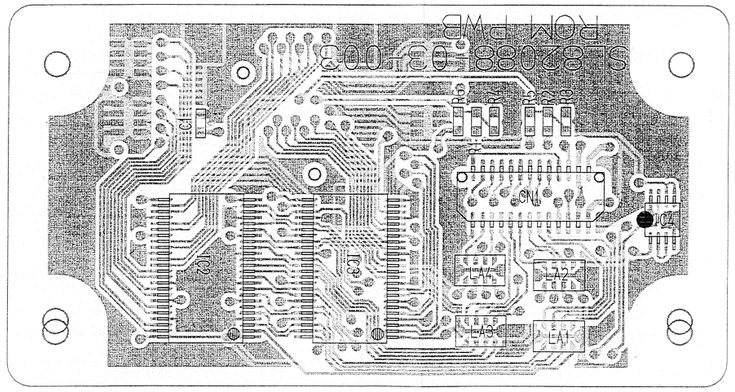

· CONN.

— SIDE A —

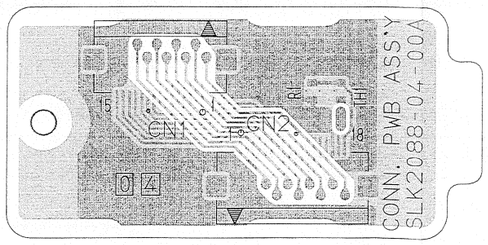

SL82088-04-001

4-57

4.38 IS & TG BORAD BLOCK DIAGRAM (G channel)

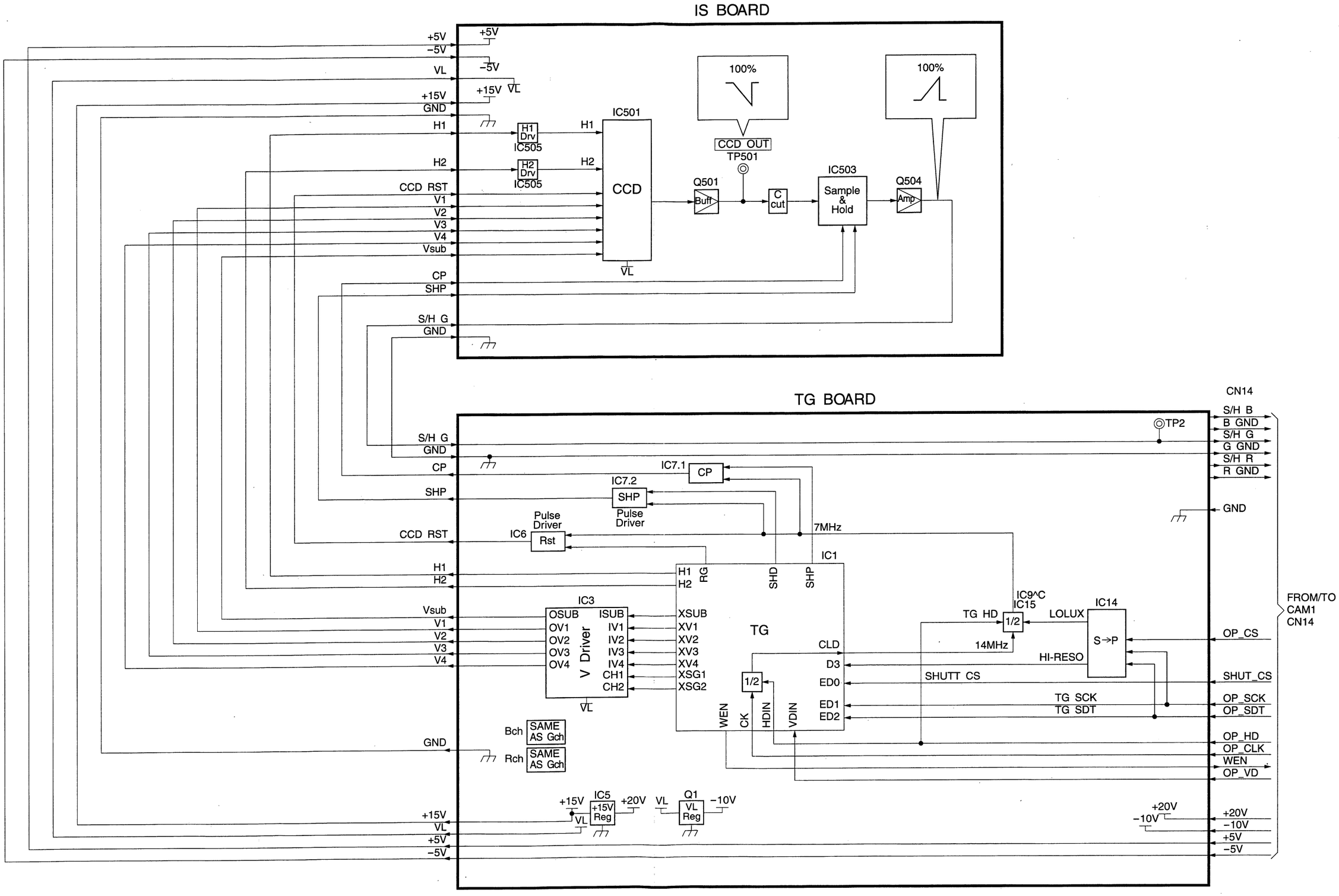

4.39 CAM1 BOARD BLOCK DIAGRAM

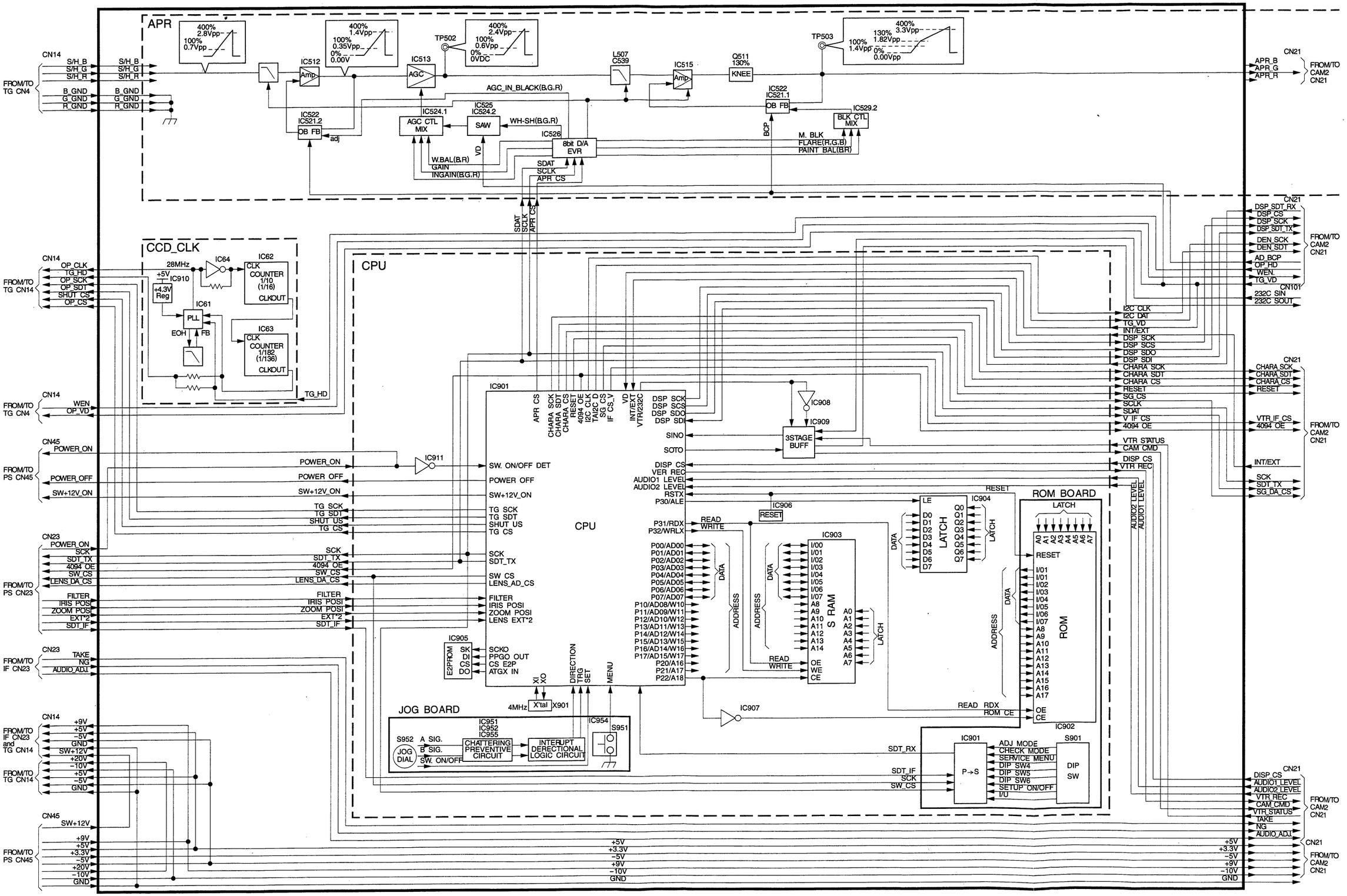

4.40 CAM2 BOARD BLOCK DIAGRAM

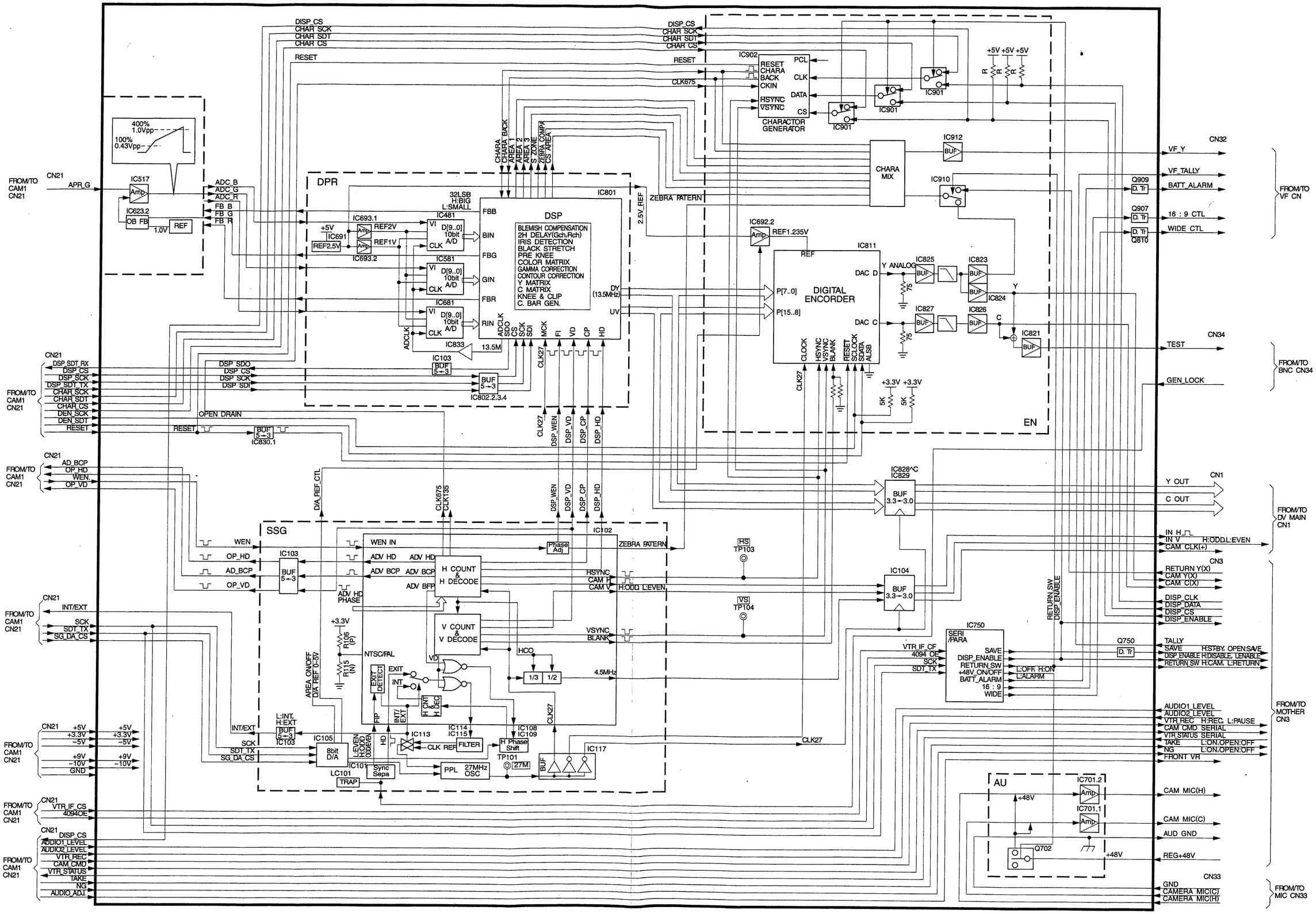

4.41 IF, SWF, SWRU BLOCK DIAGRAM

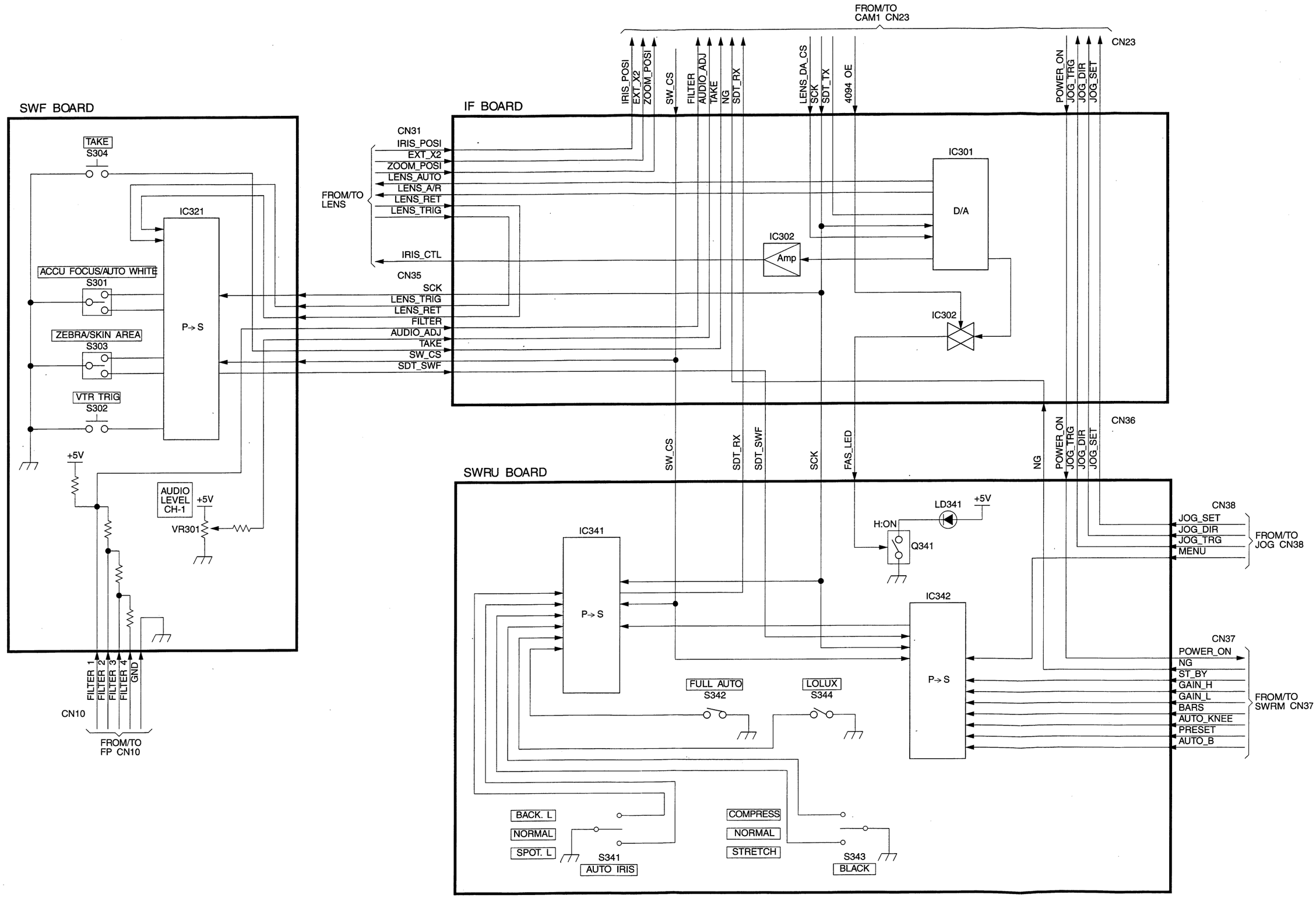

IDE-V27525 / DRUCK: 55

4.42 SYSCON BLOCK DIAGRAM

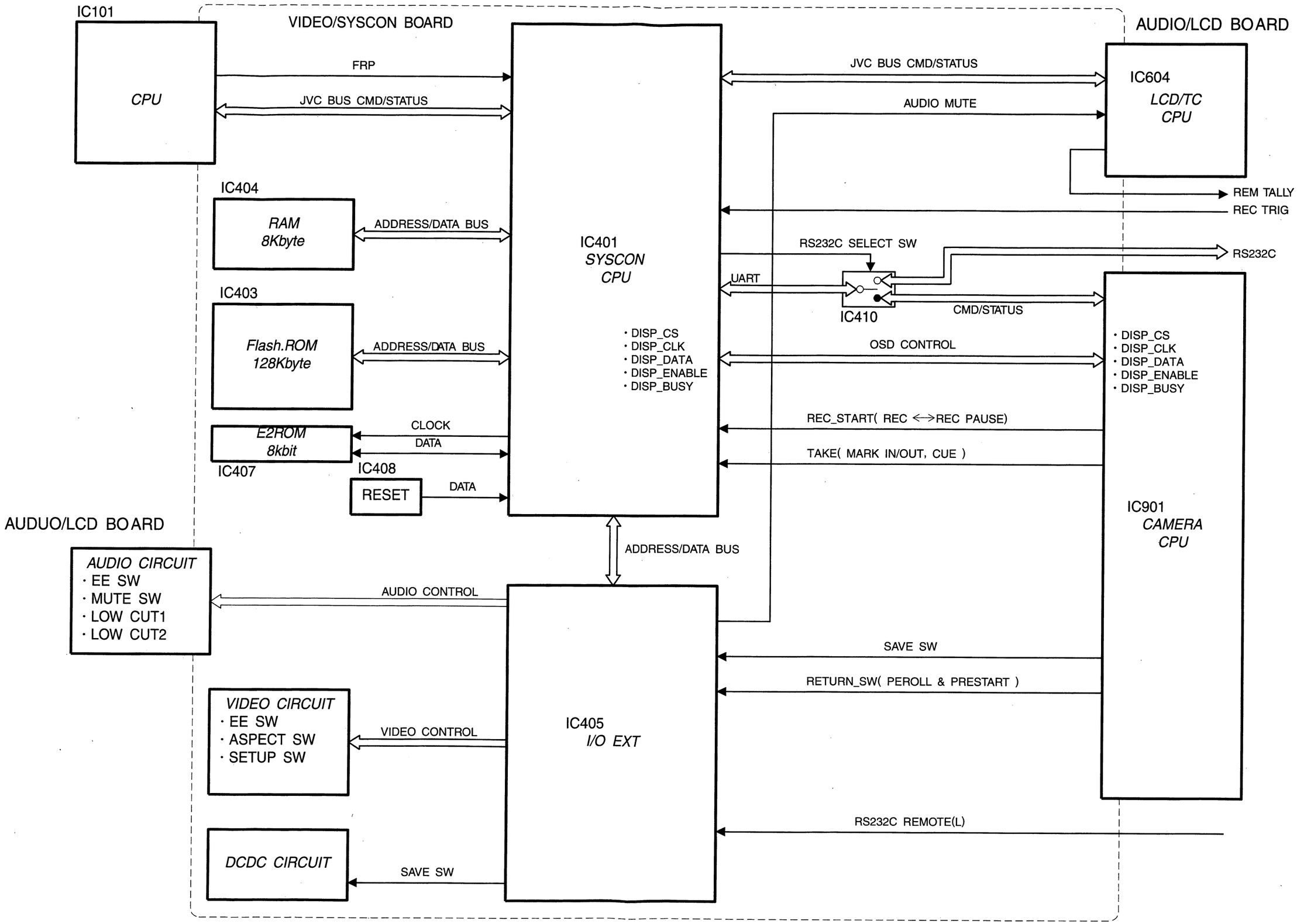

4.43 LCD BLOCK DIAGRAM

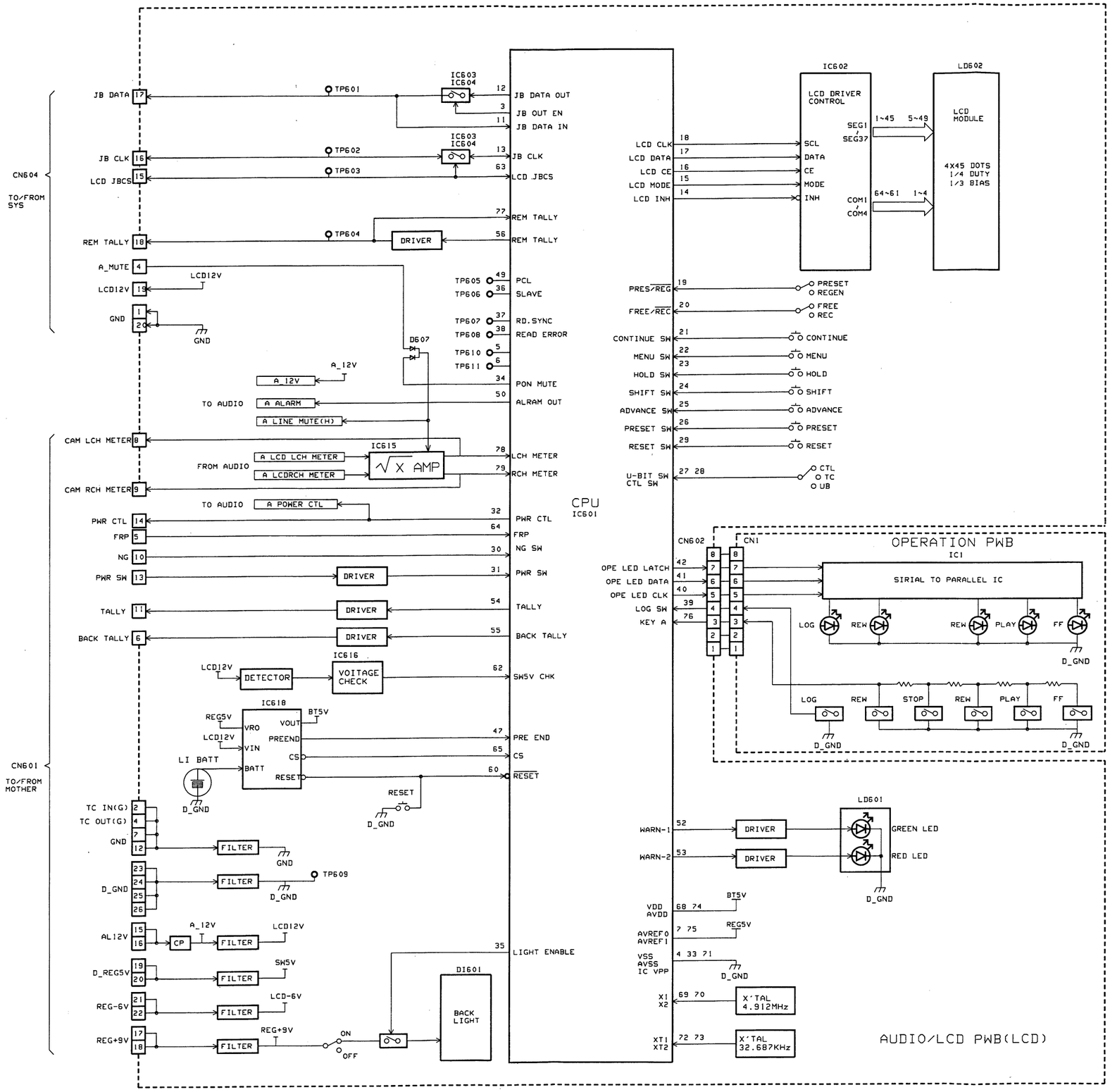

4-63

4.44 VIDEO BLOCK DIAGRAM

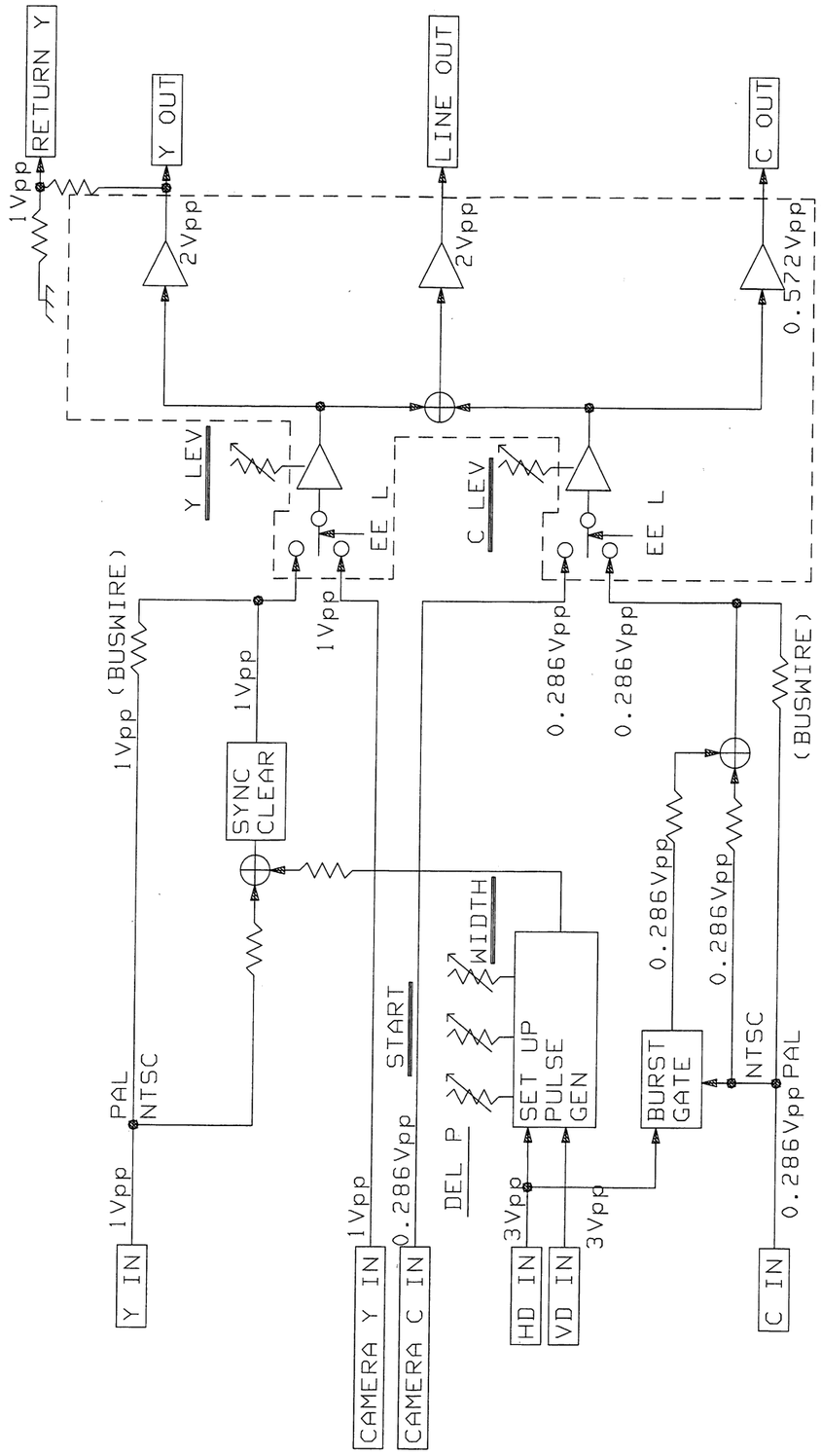

4.45 REG BLOCK DIAGRAM

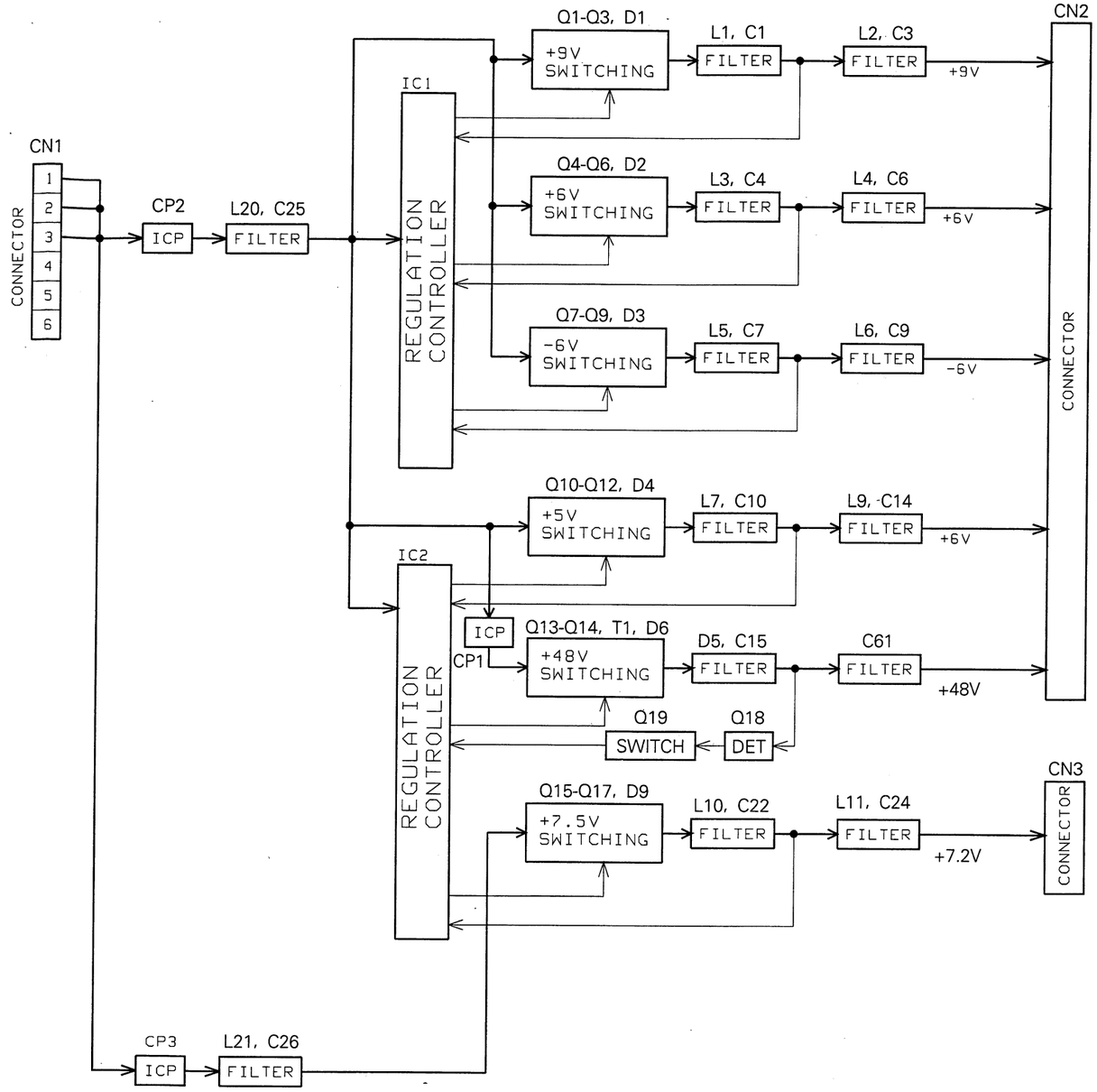

4.46 AUDIO BLOCK DIAGRAM

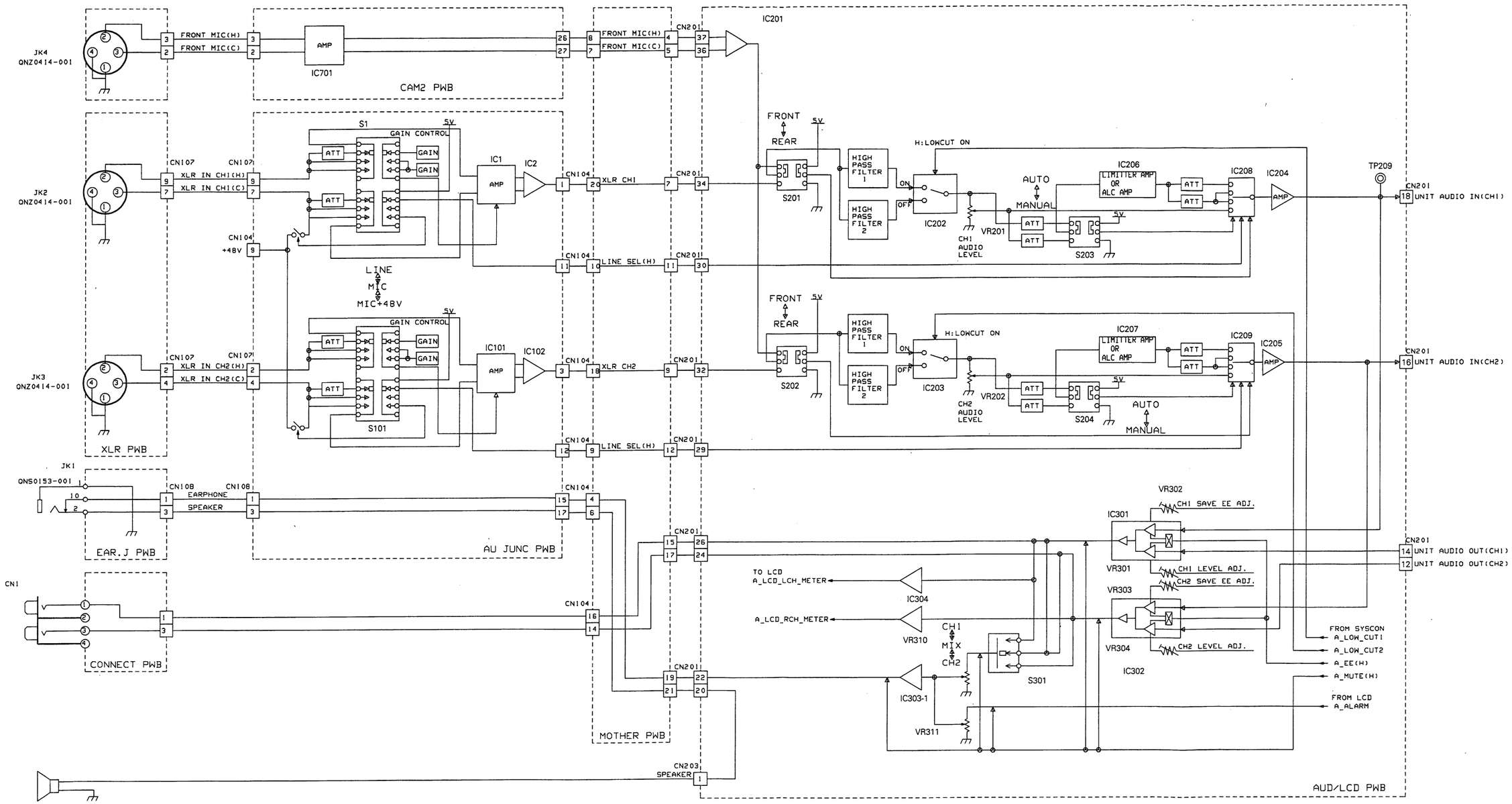

4.47 DV BLOCK DIAGRAM 1/2

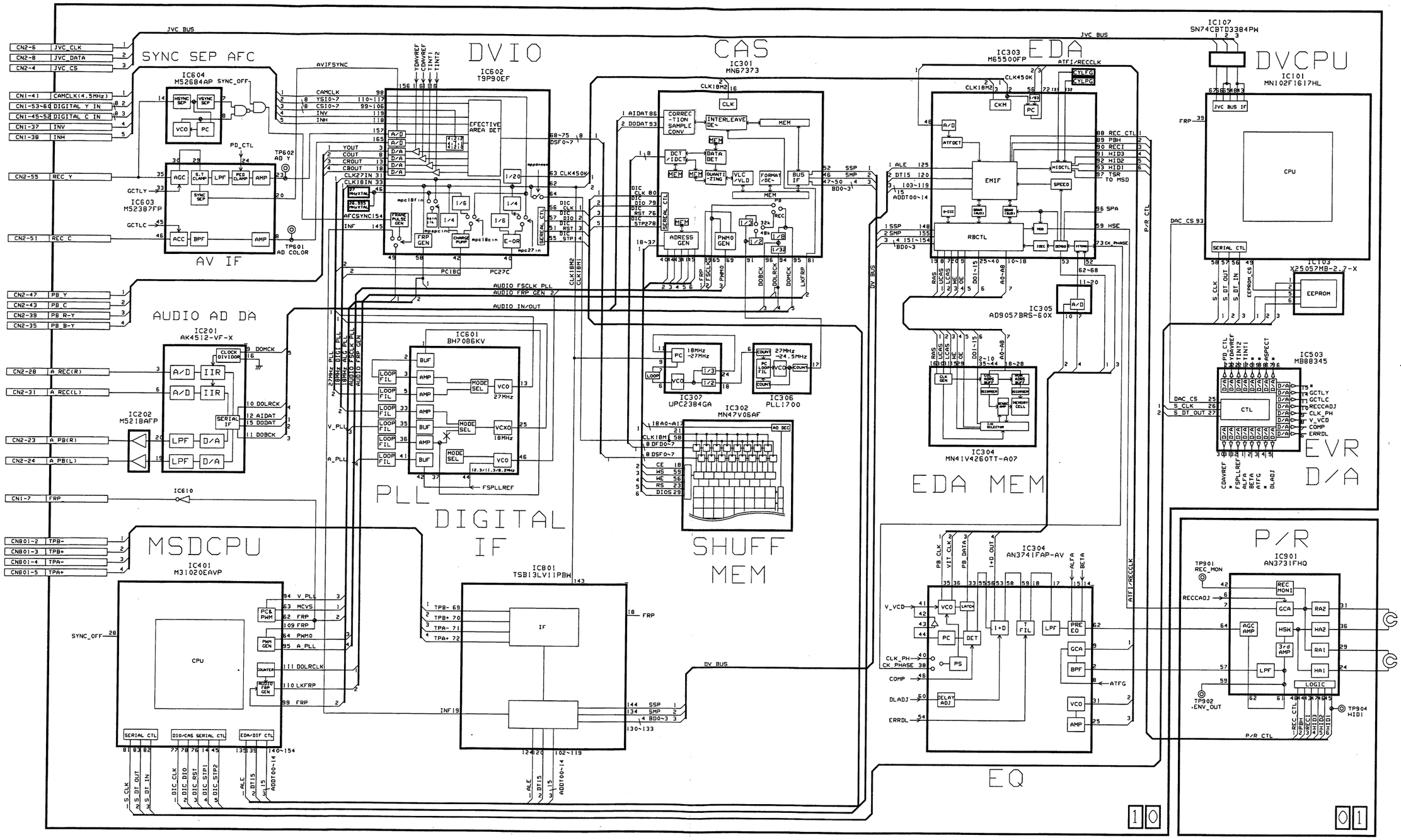

· DV BLOCK DIAGRAM 2/2

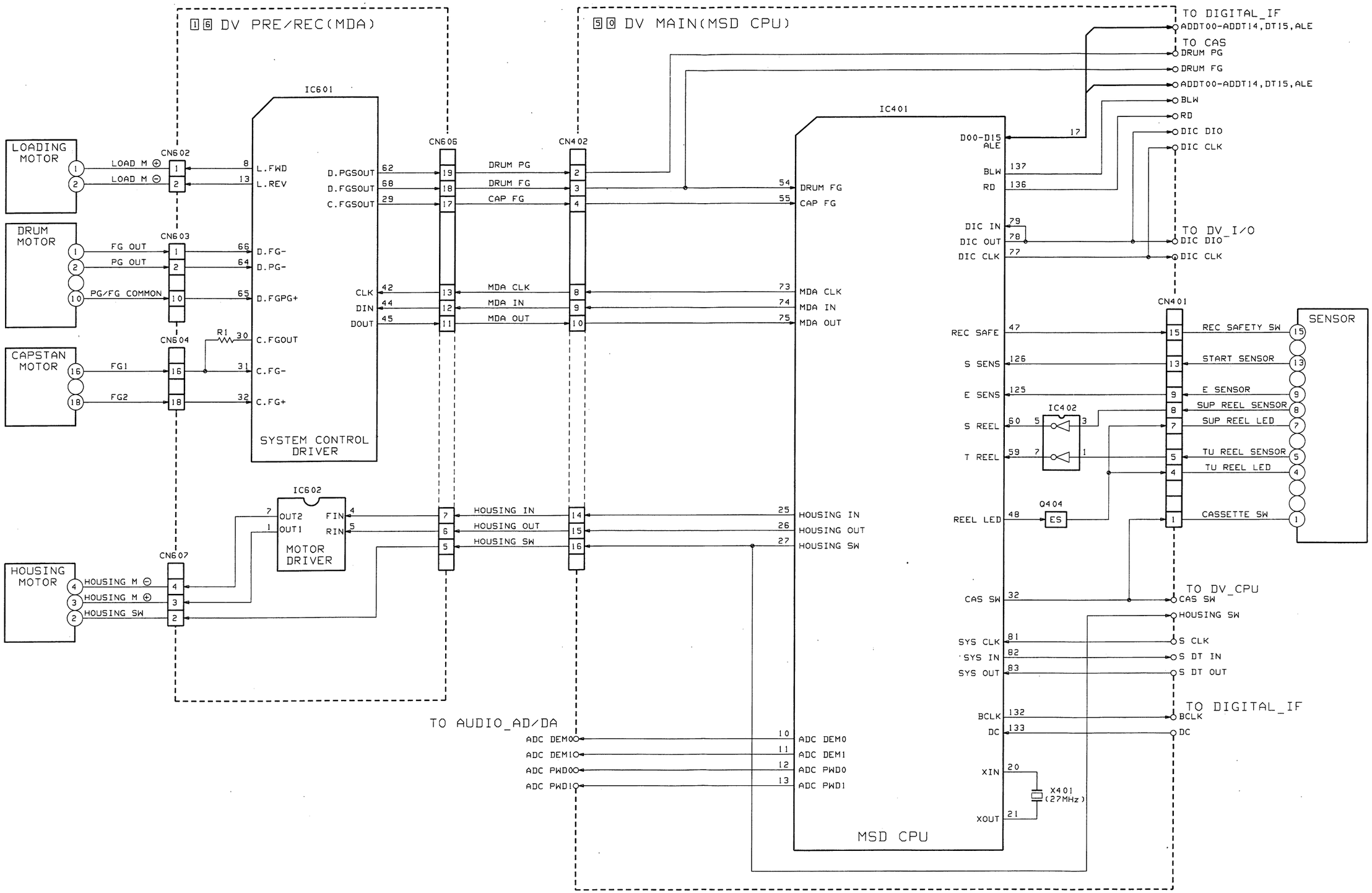

SL93113

4.48 IC BLOCK DIAGRAMS

■ AD603AR-X [ANALOG DEVICES] (Variable Gain CTL Amplifier)

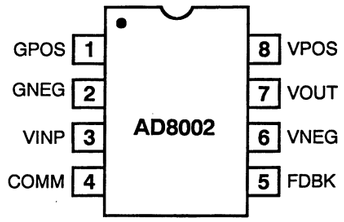

■ Pin funoction

Pin No.	Pin Name	
1	GPOS	Gain CTL Input " HI "
2	GNEG	Gain CTL Input " LOW "
3	VINP	Amp. Input
4	COMM	GND
5	FDBK	Feedback
6	VNEG	Vss
7	VOUT	Output
8	VPOS	V_{DD}

■ AD8031ART-X [ANALOG DEVICES] (Op.Amp.)

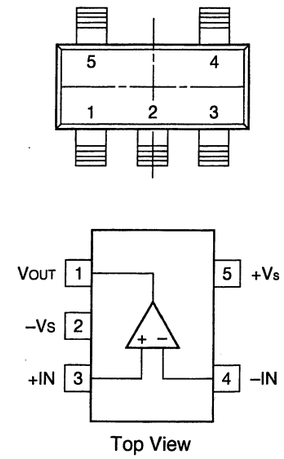

Top View

■ AD9057BRS-60-X [ANALOG DEVICES] (8bit A/D Converter)

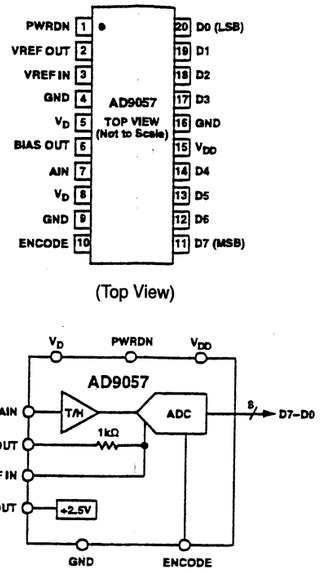

(Top View)

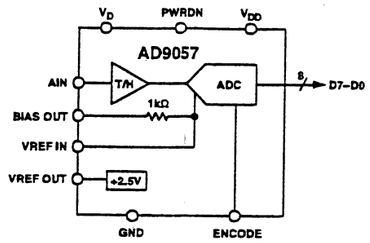

■ ADV7171KS [ANALOG DEVICES] (Digital PAL/NTSC Video Encoder)

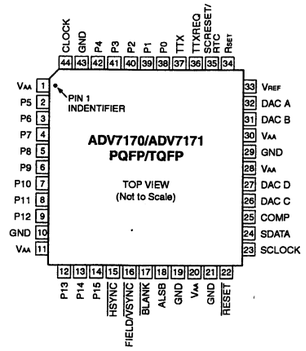

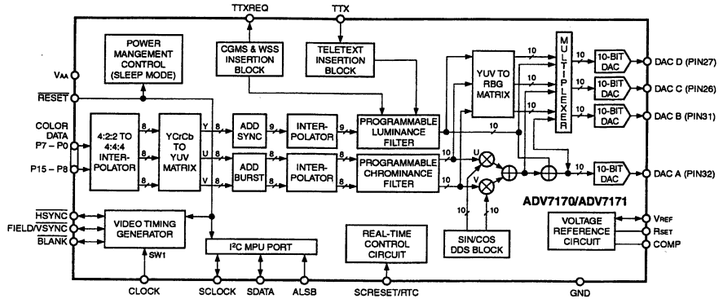

■ AK4518-VF-X [ASAHIKAEI] (16 bit A/D, D/A Convertor for Audio Signal)

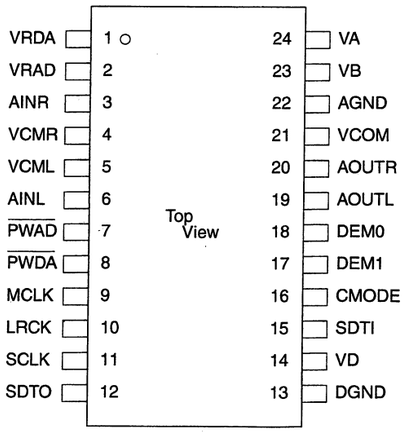

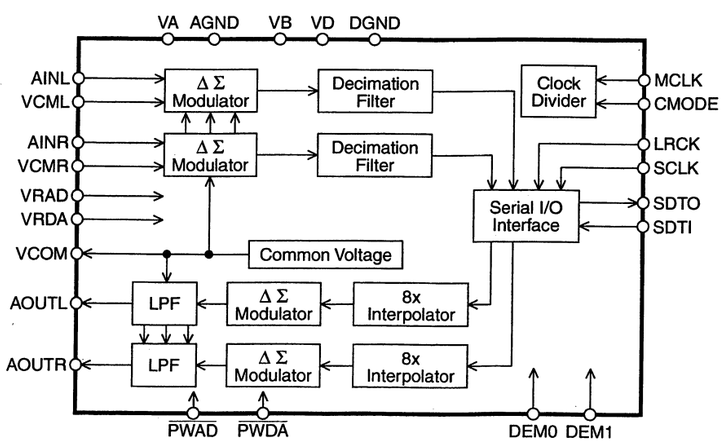

■ ADS933Y-X [BURR-BROWN] (10bit 20MHz A/D Convertor for Video Signal)

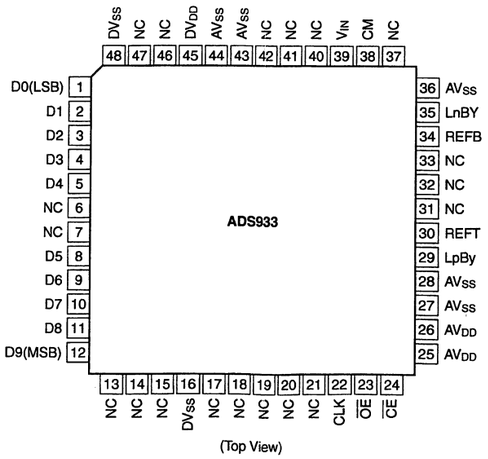

(Top View)

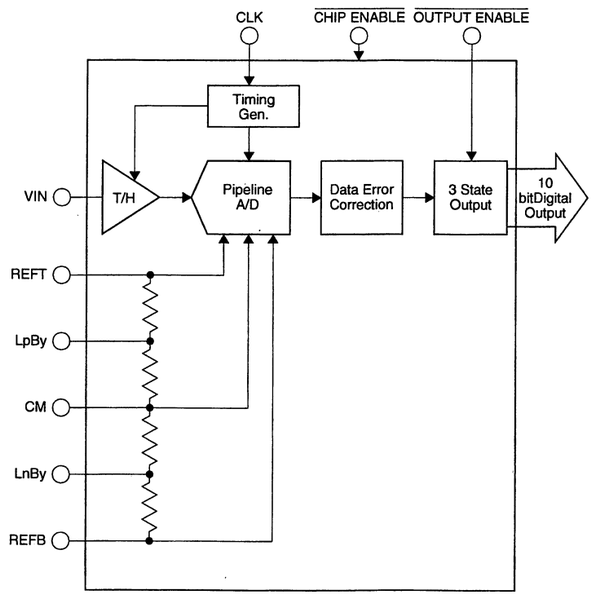

■ AN3731FHQ [MATSUSHITA]
(Pre/Rec Amp.)

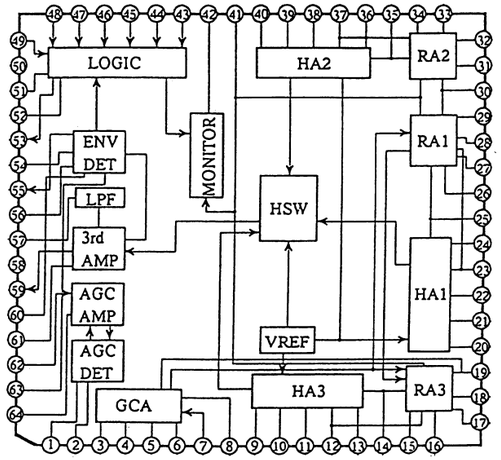

■ AN3741FAP-A [MATSUSHITA]
(Playback Equalizer)

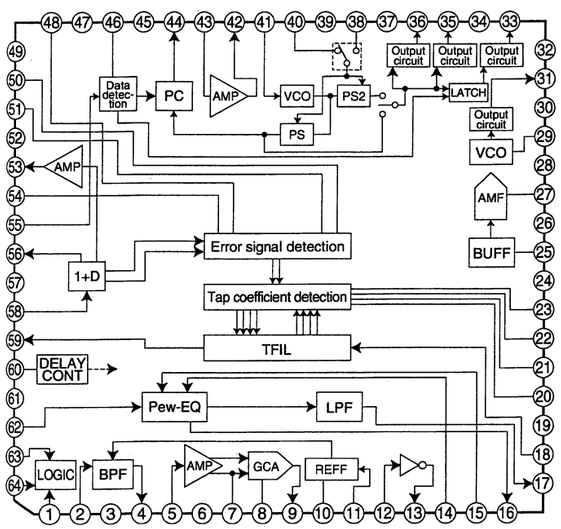

■ BA6138F-X [ROHM]
(Audio Level Detector)

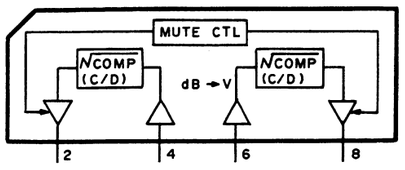

■ AN77L03M-X [MATSUSHITA]
(Voltage Regulator)

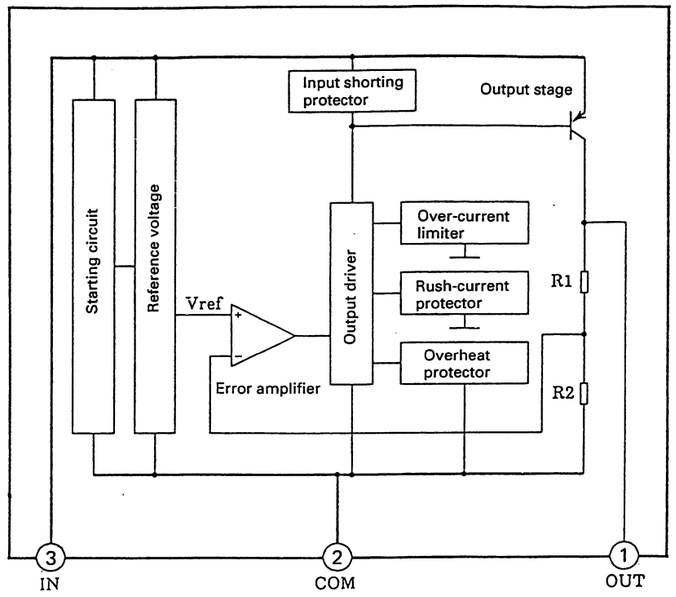

■ BA6417F-X [ROHM]
(Reversible Motor Driver)

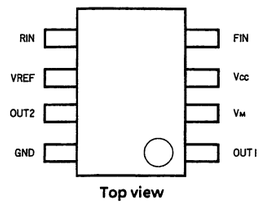

Top view

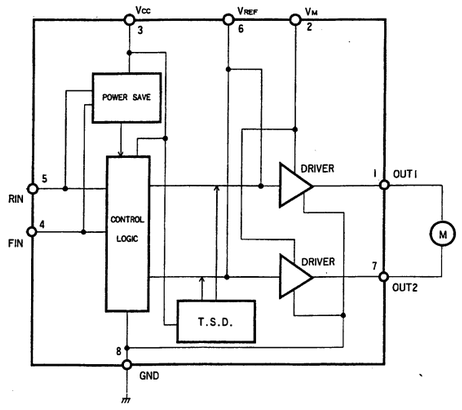

■ BH7086KV [ROHM]
(4 Channel VCO for DVC format)

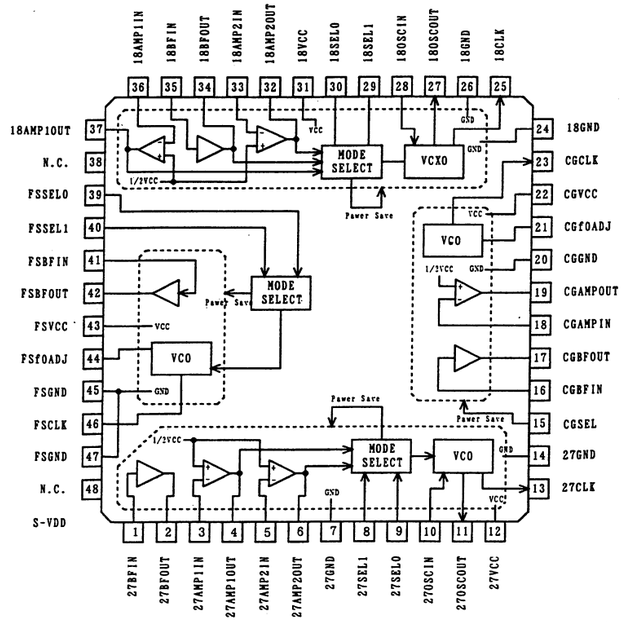

■ BA3314F-X [ROHM]
(Dual Pre-Amp.for Audio Signal)

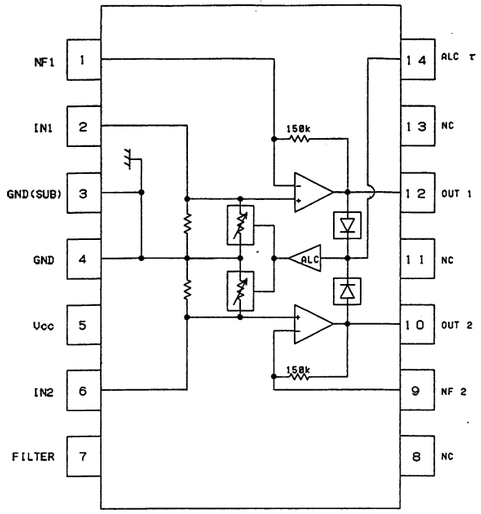

(Top View)

■ BA6254FS-X [ROHM]
(Motor Driver)

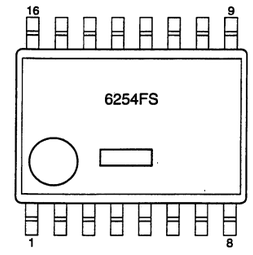

(Top View)

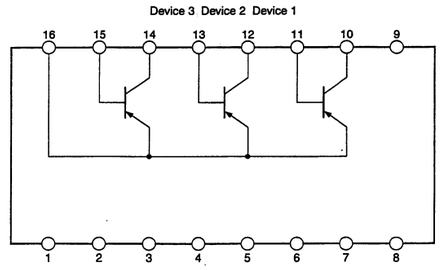

■ CXA1439M-X [SONY]
(Correlated Double Sampling)

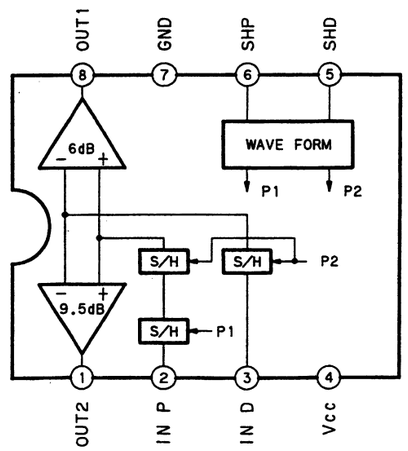

DE-V27525 / DRUCK: 63

■ BA6865KV [ROHM]
(Motor Driver Controller)

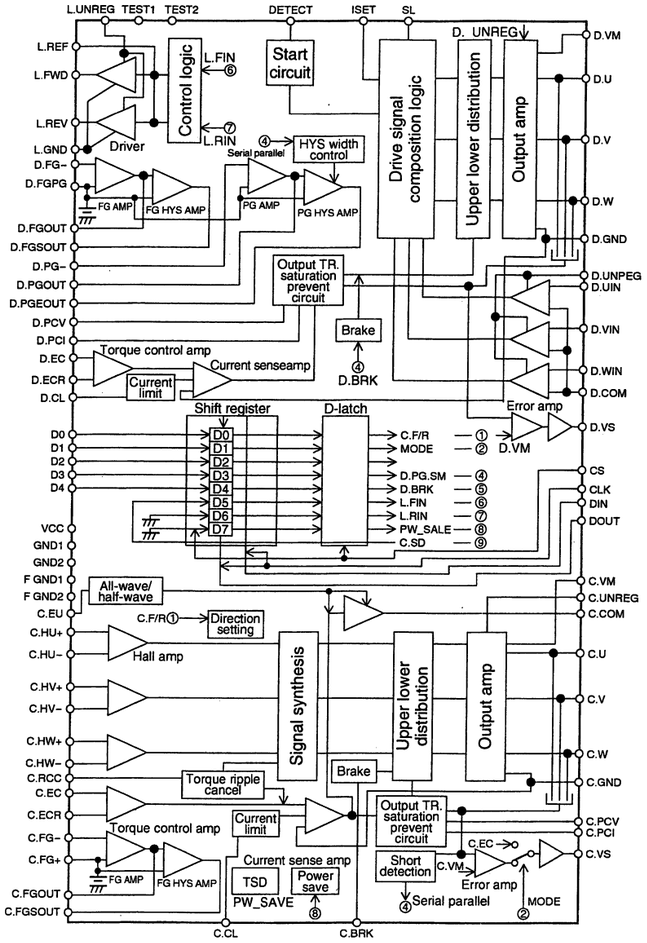

■ CLC450AJM5-X [NATIONAL SEMICONDUCTOR]
(Current Feedback Amplifier)

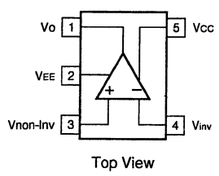

Top View

■ BA9738KV [ROHM]
(6 Channel Switching Regurator Controller)

(Top View)

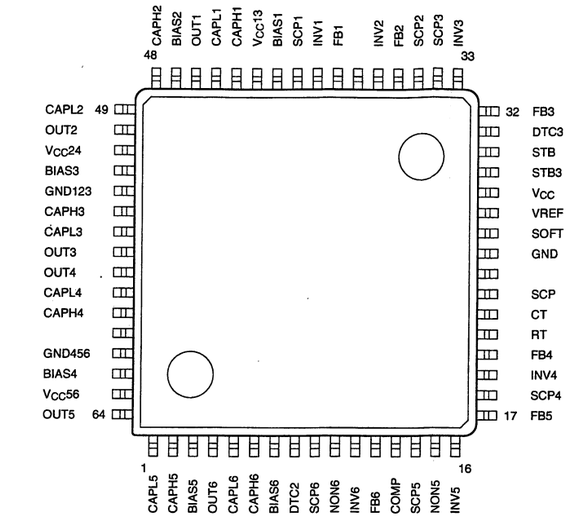

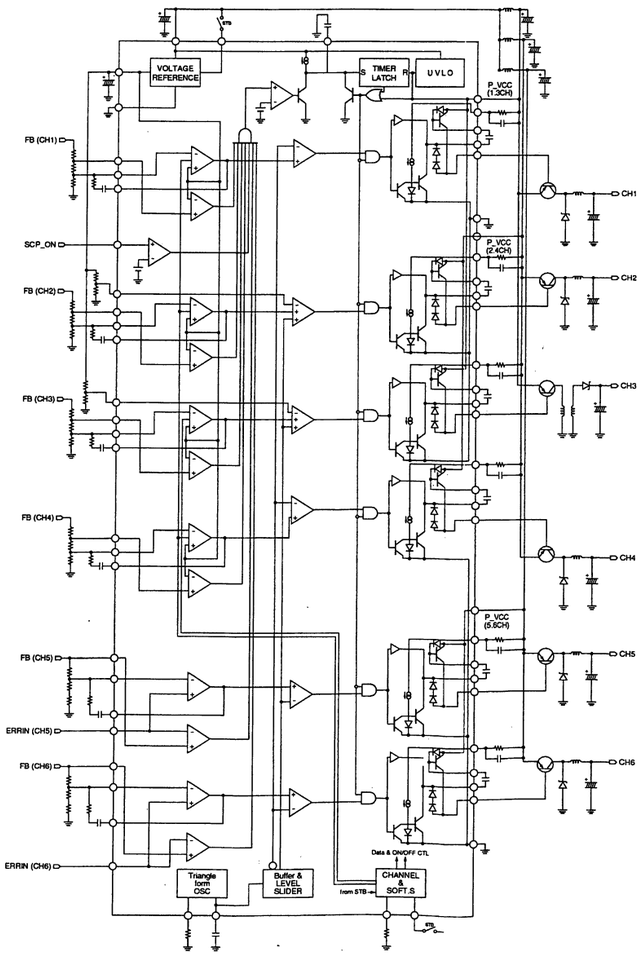

■ BU4094BCFV-X [ROHM]
(8-Stage Shift/Store Register)

(Top View)

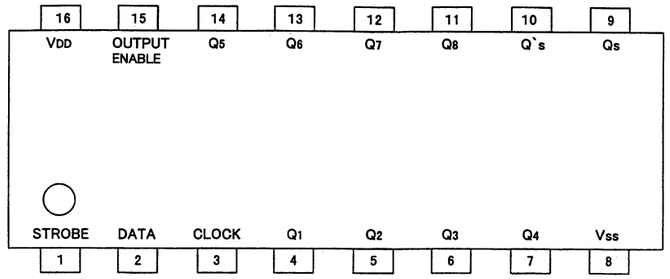

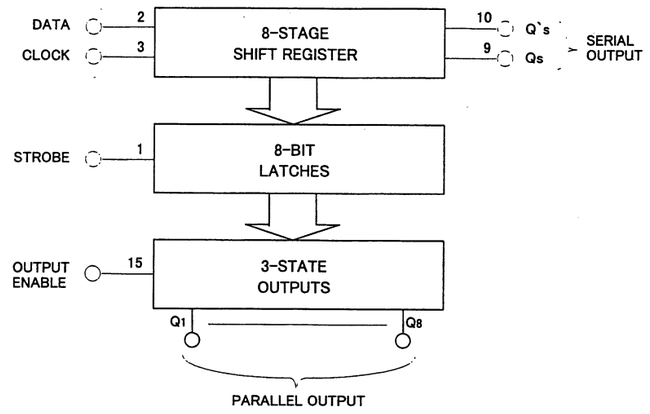

■ CY62256LL70SN-X [CYPRESS]
(32k x 8 Static RAM)

Top View

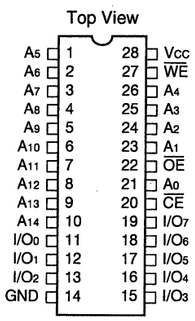

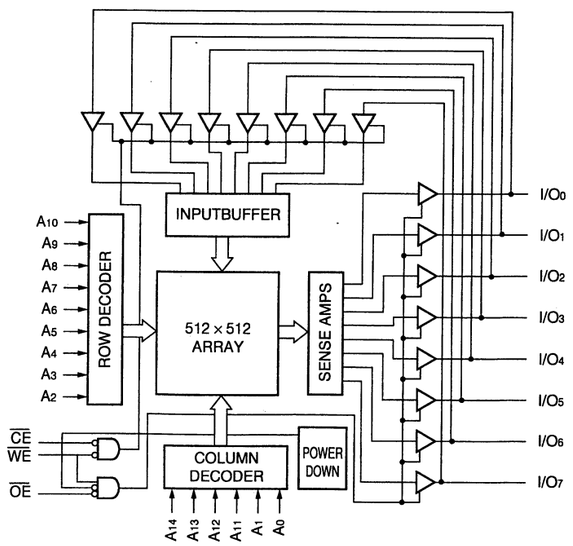

4-70

■ CXD1265R [SONY]
(CCD Camera Timing Generator)

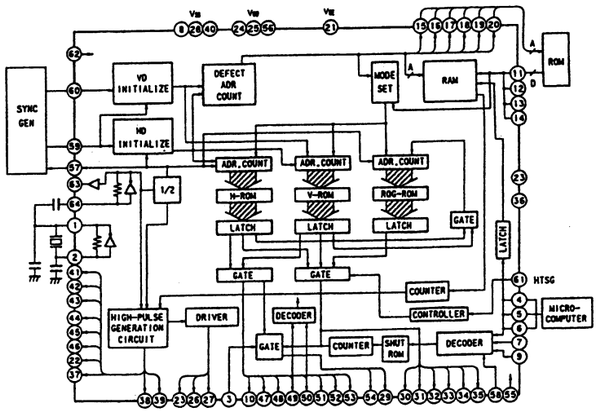

Pin Description

Pin No.	Symbol	I/O	Description
1	OSCO	O	Inverter output for oscillation.
2	OSCI	I	Inverter input for oscillation.
3	EF	I	Input mode select for defect compensation data. (With pull-up resistance) High: External ROM used, Low: Serial input from microcomputer
4	ED0	I	Shutter speed setting. Strobe input for serial mode. (With pull-up resistance)
5	ED1	I	Shutter speed setting. Clock input for serial mode. (With pull-up resistance)
6	ED2	I	Shutter speed setting. Data input for serial mode. (With pull-up resistance)
7	SMD1	I	Shutter mode setting. (With pull-up resistance)
8	Vss	–	GND
9	SMD2	I	Shutter mode setting. (With pull-up resistance)
10	XVCT	O	External ROM power supply control.
11	D1	I	When using external ROM, data input. (With pull-down resistance) When not using, Low: No defect compensation; High: Defect compensation enabled.
12	D2	I	When using external ROM, data input. (With pull-down resistance) When not using, Low: Color; High: Black-and-white.
13	D3	I	When using external ROM, data input. (With pull-down resistance) When not using, fixed at Low.
14	D4	I	When using external ROM, data input. (With pull-down resistance) When not using, Low: NTSC; High: PAL.
15	A5	O	External ROM address output.
16	A4	O	External ROM address output.
17	A3	O	External ROM address output.
18	A0	O	External ROM address output.
19	A1	O	External ROM address output.
20	A2	O	External ROM address output.
21	VEE	–	GND
22	RG	O	Reset gate pulse output.
23	LH1	–	CCD horizontal register final-step clock output.
24	VDD	–	Power supply.
25	VDP	–	Power supply for H1 and H2.
26	H1	O	Clock output for CCD horizontal register.
27	H2	O	Clock output for CCD horizontal register.
28	Vss	–	GND for H1 and H2.
29	XSUB	O	CCD discharge pulse output.
30	XV2	O	Clock output for CCD vertical register.
31	XV1	O	Clock output for CCD vertical register.
32	XSG1	O	CCD sensor charge readout pulse output.
33	XV3	O	Clock output for CCD vertical register.
34	XSG2	O	CCD sensor charge readout pulse output.
35	XV4	O	Clock output for CCD vertical register.
36	TEST2	I	Test input. Set Low in normal operation.
37	CLD	O	4 fsc clock output.
38	XSHP	O	Pulse for sample-and-hold of pre-charge level.
39	XSHD	O	Data sample-and-hold pulse.
40	Vss	–	GND

Pin Description

Pin No.	Symbol	I/O	Description
41	XSP1	O	Color separation sample-and-hold pulse. Halted for black-and-white mode.
42	XSP2	O	Color separation sample-and-hold pulse. Halted for black-and-white mode.
43	XSH1/ SHP	O	Switching sample-and-hold pulse/pre-charge level sample-and-hold pulse (black-and-white mode)
44	XSH2/ SHD	O	Switching sample-and-hold pulse/data sample-and-hold pulse (black-and-white mode)
45	XDL1	O	Delay line clock output. Halted for black-and-white mode.
46	XDL2	O	Delay line clock output. Halted for black-and-white mode.
47	BFG	O	Pulse output for chroma modulator in encoder. When GM is set at High, defect indicator pulse output. Halted for black-and-white mode.
48	CLP1	O	Clamp pulse output.
49	CLP2	IO	Clamp pulse output. When GM is set at High, standby mode switching input.
50	CLP3	IO	Clamp pulse output. When GM is set at High, standby mode switching input.
51	CLP4	O	Clamp pulse output.
52	PBLK	O	Blanking cleaning pulse output.
53	ID	O	Line identification output. Halted for black-and-white mode.
54	WEN	O	Write enable output for low-speed shutter operation.
55	GM	I	Low: Analog signal processing; High: Digital signal processing. (With pull-down resistance)
56	VDD	–	Power supply.
57	CL	O	4 fsc clock output.
58	PS	I	Switching for electronic shutter speed input method. (With pull-up resistance)Low: Serial input; High: Parallel input
59	HD	I	Horizontal synchronizing signal input.
60	VD	I	Vertical synchronizing signal input. (Low period is 9H for NTSC/EIA and 7.5H for PAL/CCIR.)
61	HTSG	I	Control input for XSG1and XSG2. (With pull-up resistance) Low: XSG1, XSG2 halted; High: XSG1, XSG2 generated.
62	TEST	I	Test input. Set at Low during normal operation. (With pull-down resistance)
63	XCK	O	8 fsc clock output.
64	CK	I	8 fsc clock input

Time Chart (1) **< NTSC vertical direction >** (However, ID halted for black-and-white mode)

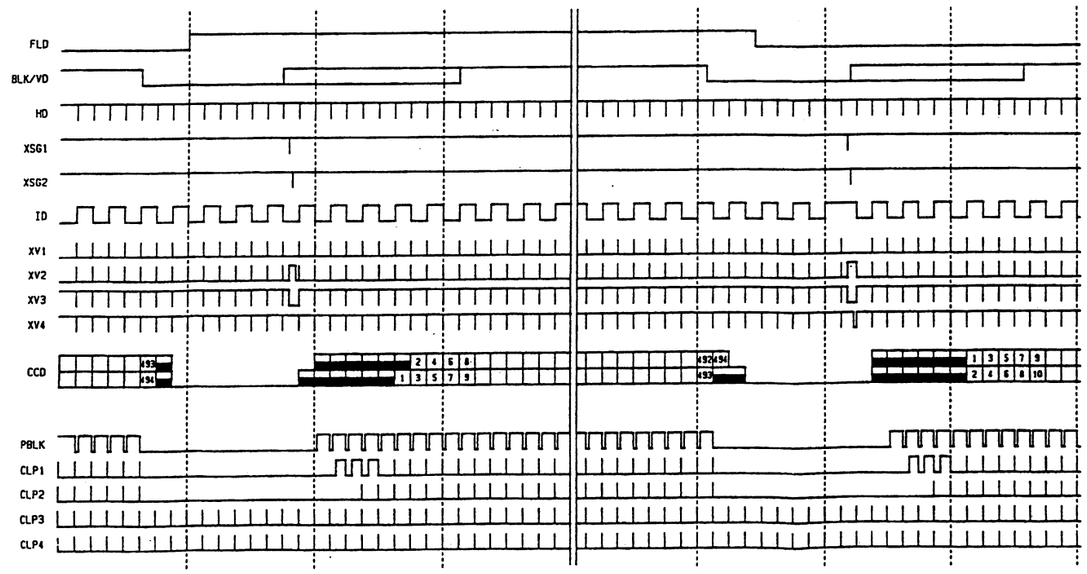

4-71

Time Chart (2) **< PAL vertical direction >** (However, ID halted for black-and-white mode)

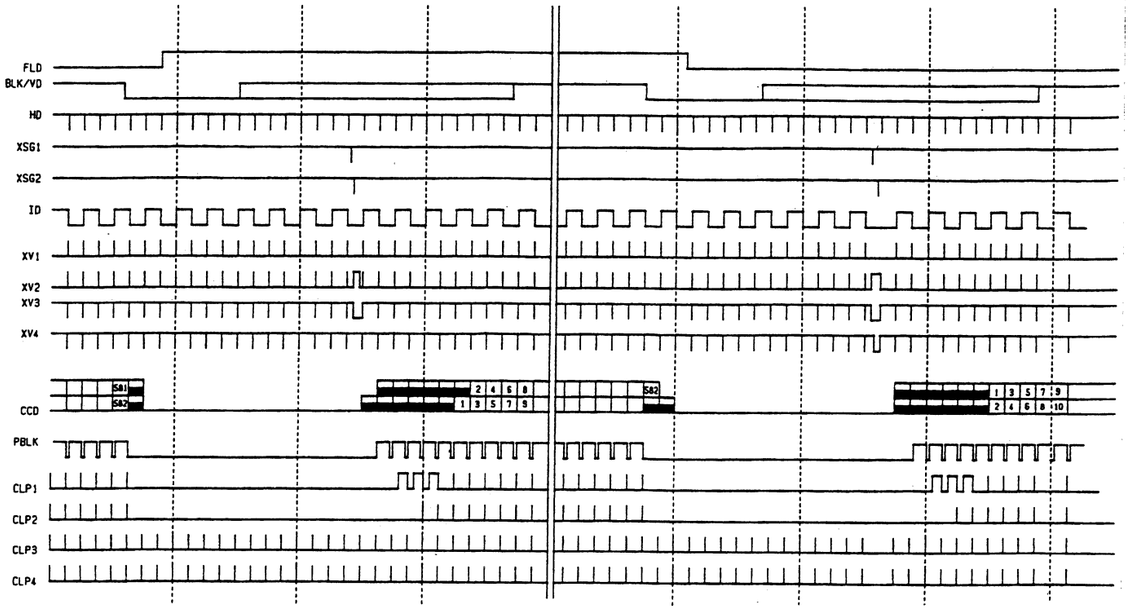

Time Chart **< NTSC horizontal direction >** (GM=L, D2=H, TEST2=L)

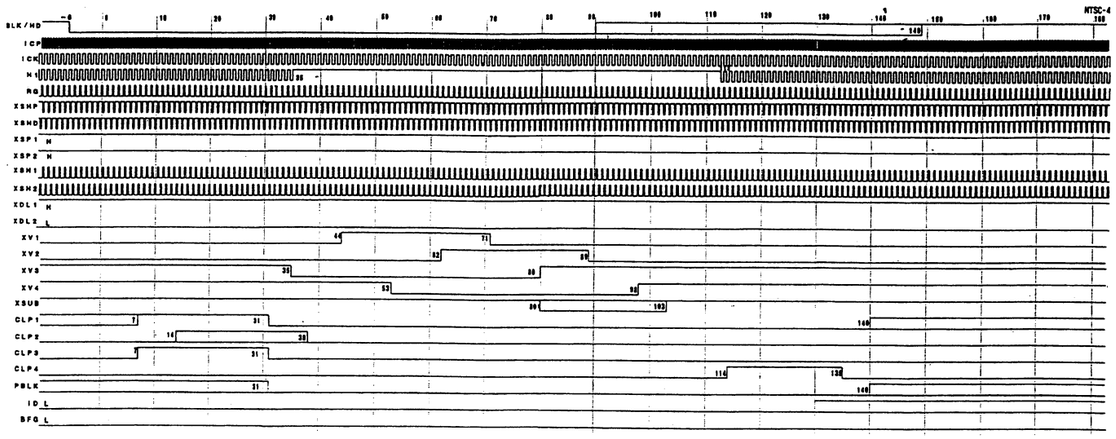

Time Chart **< PAL horizontal direction >** (GM=L, D2=H, TEST2=L)

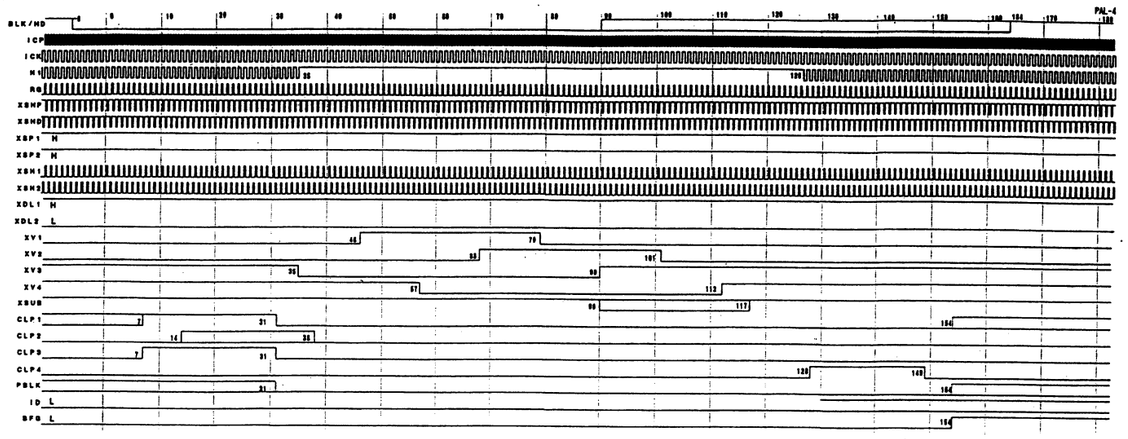

Time Chart **< High speed phase >**

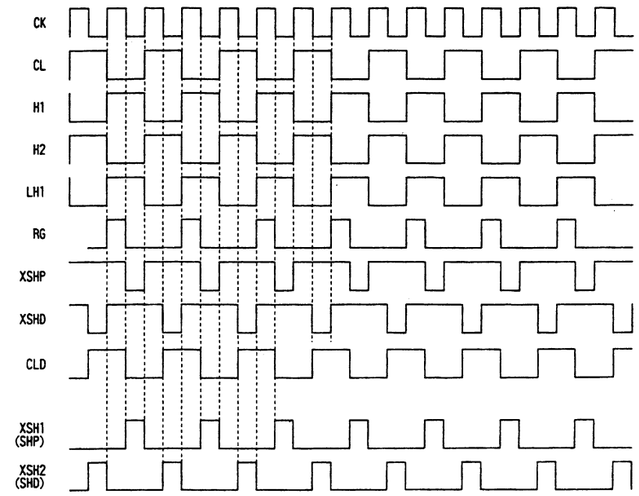

■ LMC6082IM-X [National Semiconductor] (Precision CMOS Dual Op.Amp.)

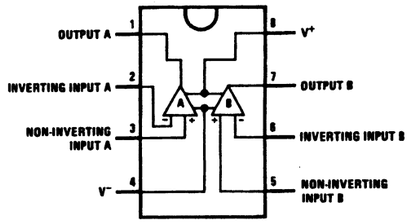

Top View

■ LP2986IMM-X [NATIONAL SEMICONDUCTOR] (Adjustable Voltage Regulator)

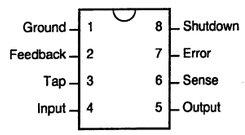

Top View

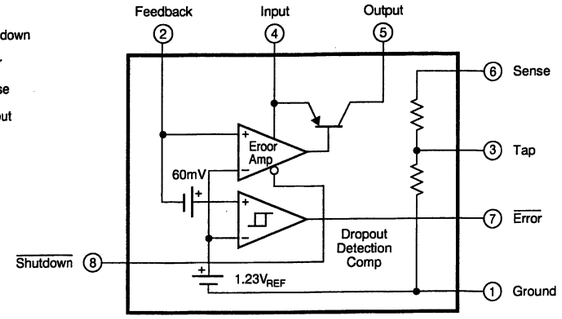

■ M27W102-80N6-02 [ST MICRO ELECTRONICS] (1M Bit (64kb x 16) EPROM)

(Top View)

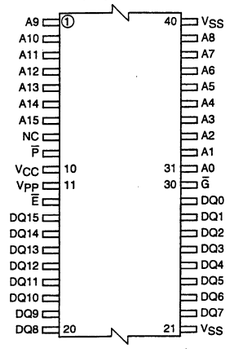

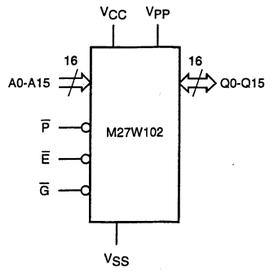

Table 1. Signal Names

A0-A15	Address Inputs
Q0-Q15	Data Outputs
$\overline{E}$	Chip Enable
$\overline{G}$	Output Enable
$\overline{P}$	Program
V_{PP}	Program Supply
V_{CC}	Supply Voltage
V_{SS}	Ground

■ JCS0050 [JVC] (Digital Signal Processor)

(Top View)

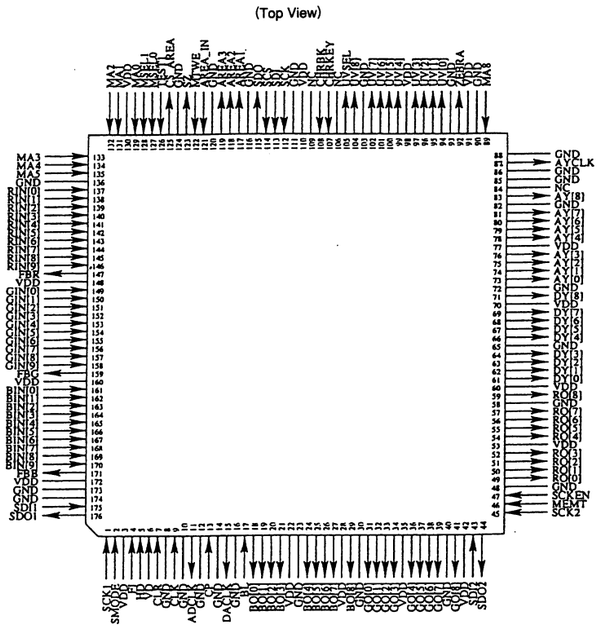

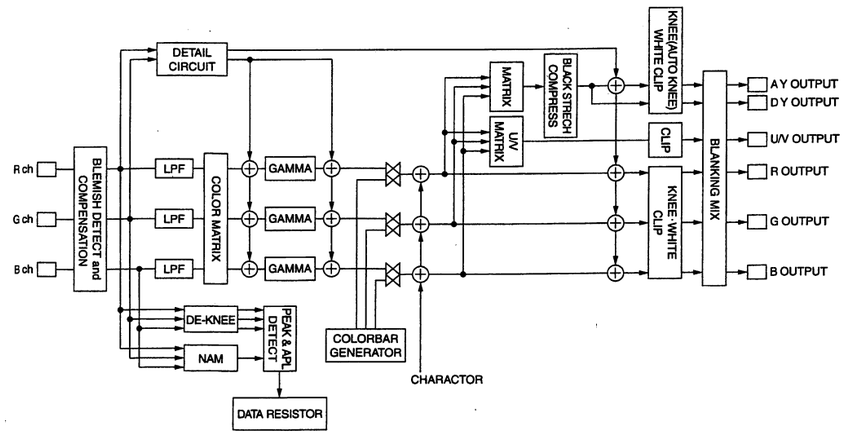

■ LM2597M-ADJ-X [NATIONAL SEMICONDUCTOR] (0.5A Step-Down Voltage Regulator)

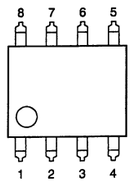

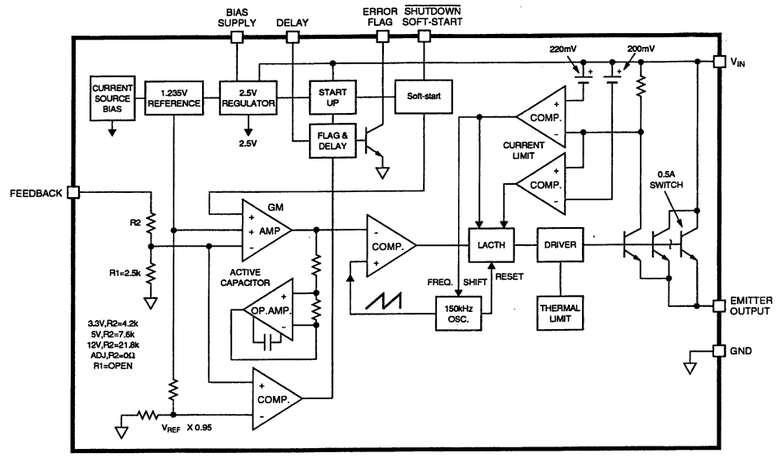

■ LM2598S-ADJ-X [NATIONAL SEMICONDUCTOR] (1A Step-Down Voltage Regulator)

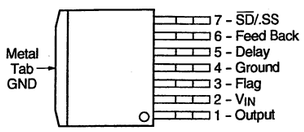

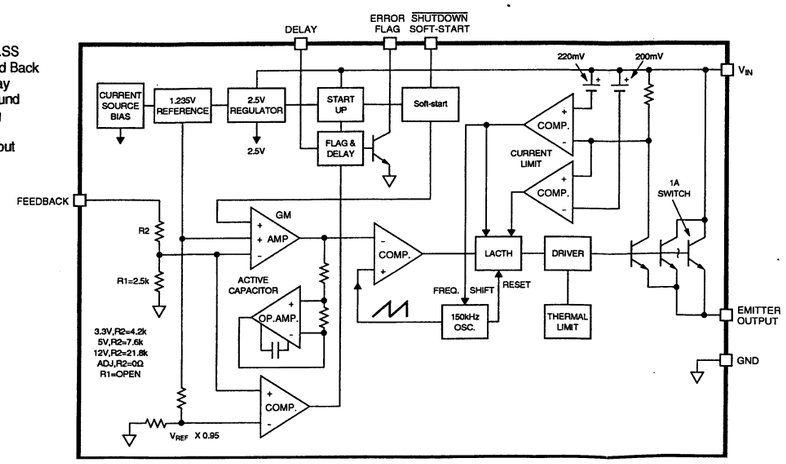

4-73

■ LM1881M-X [National Semiconductor] (Video Sync Separator)

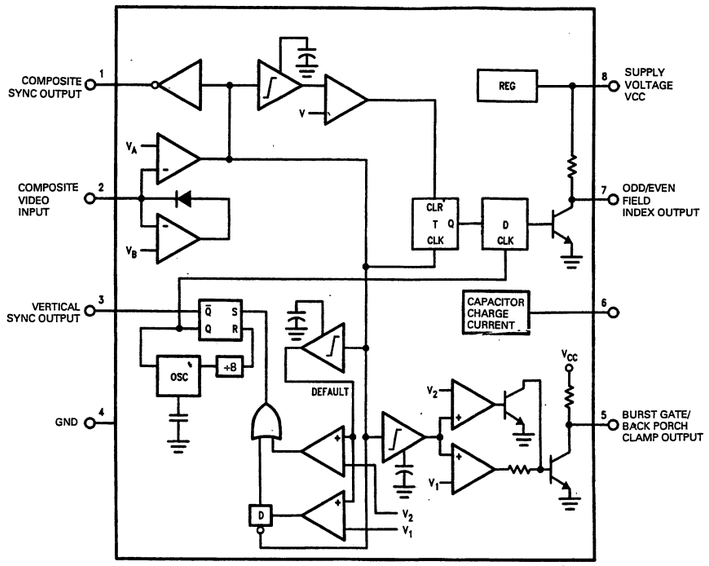

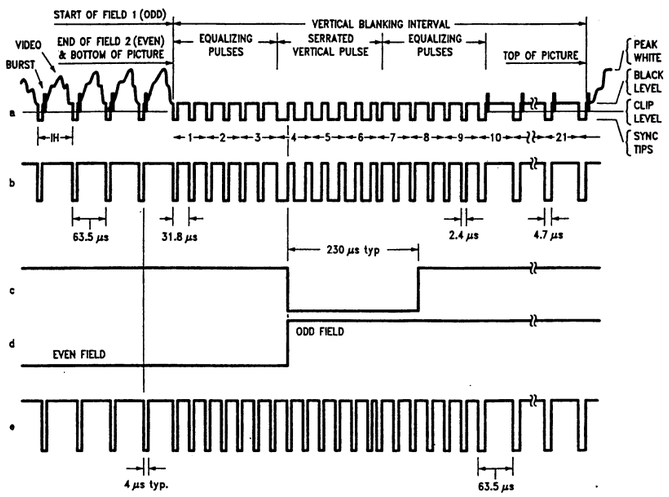

(a) Composite Video; (b) Composite Sync; (c) Vertical Output Pulse; (d) Odd/Even Field Index; (e) Burst Gate/Back Porch Clamp

■ M31020EAVP-101 [MITSUBISHI] (32bit Single Chip Micro Computer)

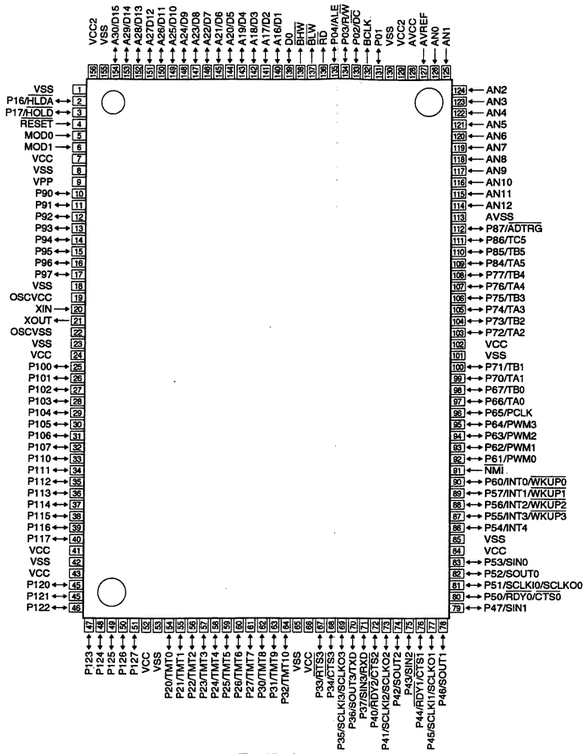

(Top View)

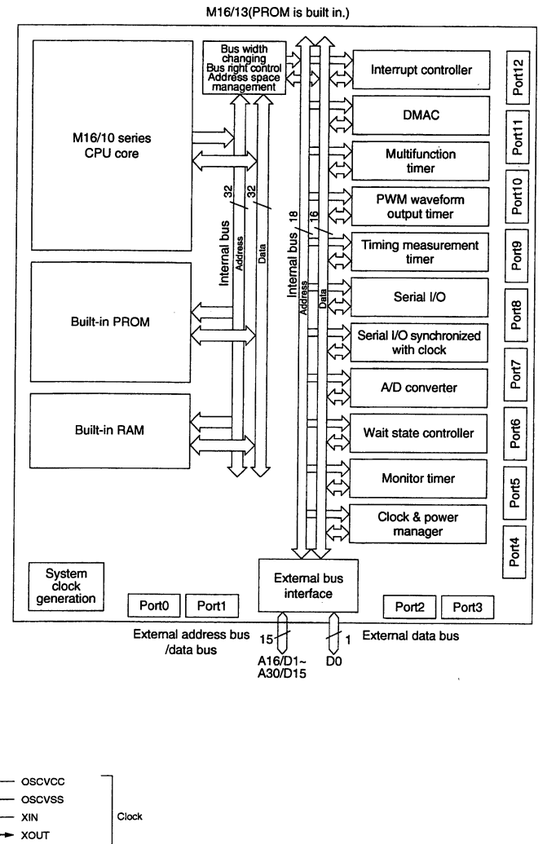

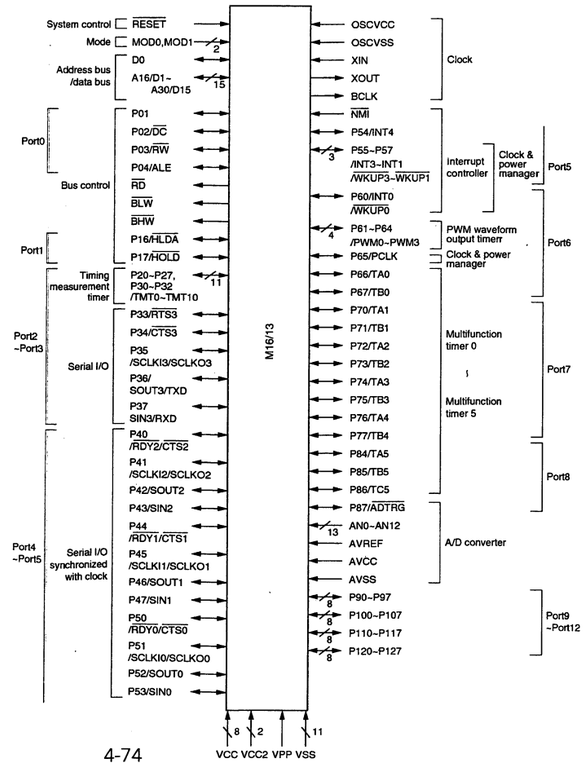

4-74

■ M51957BFP-X [MITSUBISHI]
(Voltage Detector/System Reset)

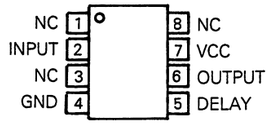

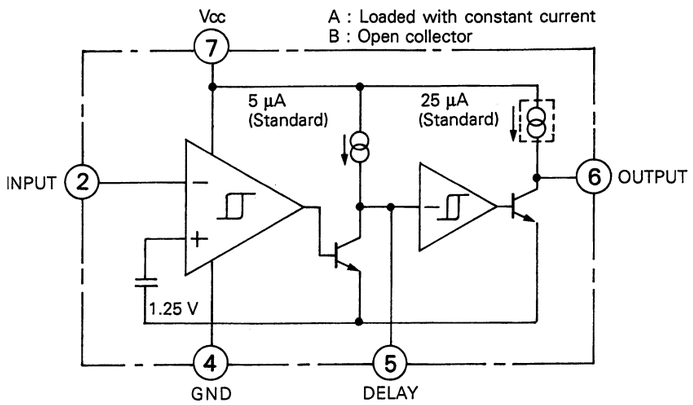

■ M5201FP-X [MITSUBISHI]
(Switch Op.Amp.)

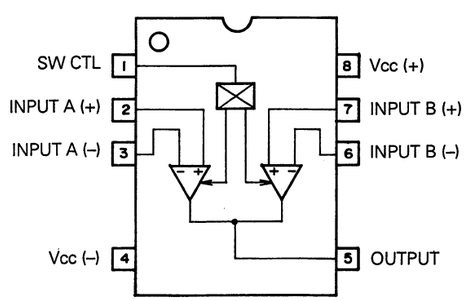

TRUE TABLE

SW CTL	OUTPUT
H	A
L	B

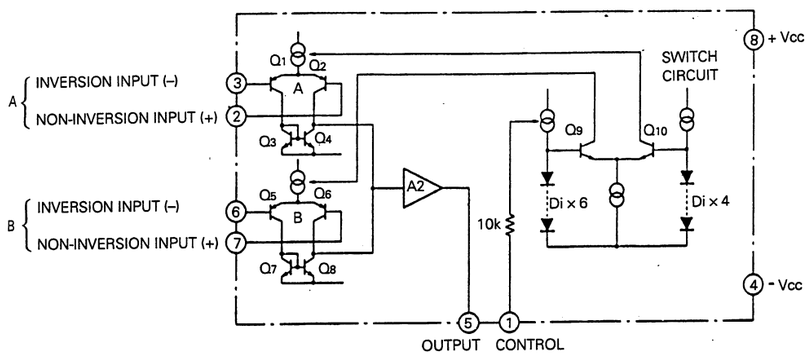

■ M5218AFP-X [MITSUBISHI]
(Dual Op.Amp.)

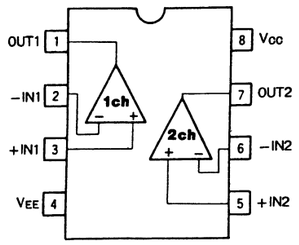

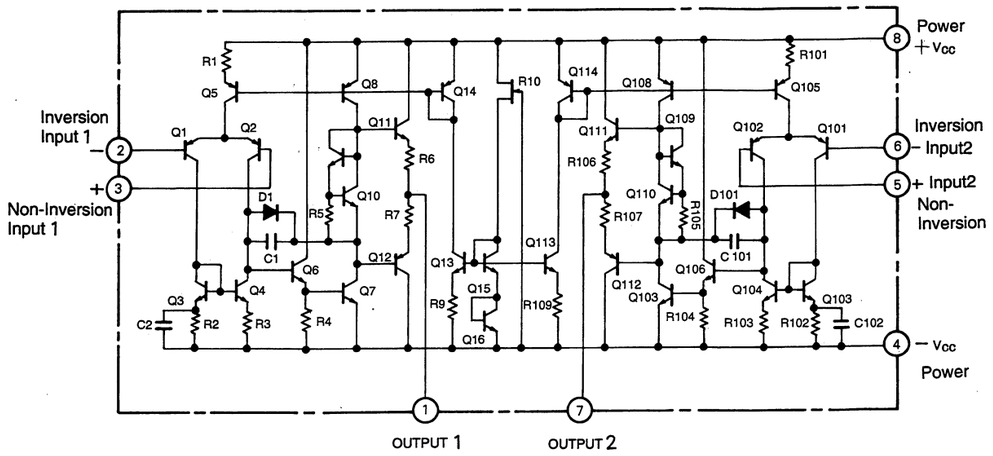

■ M52387FP [MITSUBISHI]
(Digital Signal Interface)

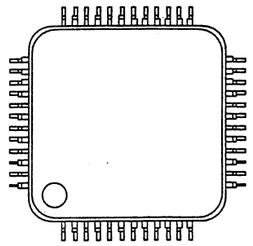

(Top View)

1. WIDE DET OUT1
2. WIDE DET OUT2
3. ACC FIL
4. BPF ADJ
5. NC
6. C-EE OUT
7. VCC2 (3V)
8. C-AD OUT
9. NC
10. EE MUTE
11. NC
12. VREF2
13. IREF FIL
14. VREF FIL
15. IREF
16. GND
17. GND2(C)
18. VREF1
19. GND3(PULSE)
20. CP SYNC OUT
21. NC
22. NC
23. Y-AD OUT
24. PED DC CTL
25. PED CLP FIL
26. Y-EE OUT
27. NC
28. SYNC SEP FIL
29. CLP IN
30. AGC OUT
31. VCC3(3V)
32. NC
33. AGC CTL
34. PWR OFF
35. Y IN
36. NC
37. AGC FIL
38. LPF MONI
39. VBLK IN
40. GND1(Y)
41. LPF ADJ
42. NC
43. VCC1(4.8V)
44. NC
45. ACC CTL
46. C IN
47. WIDE DET IN
48. NC

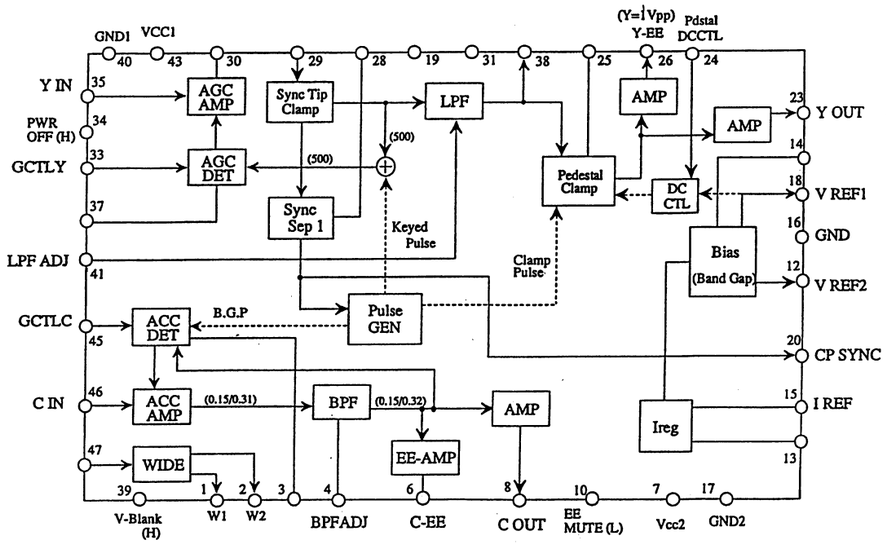

4-75

■ M52684AFP-XE [MITSUBISHI]
(SYNC Separator and AFC)

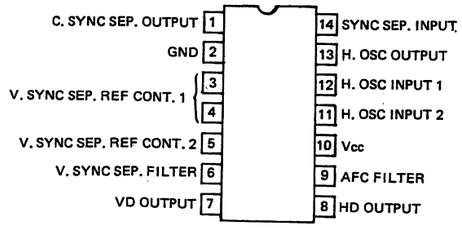

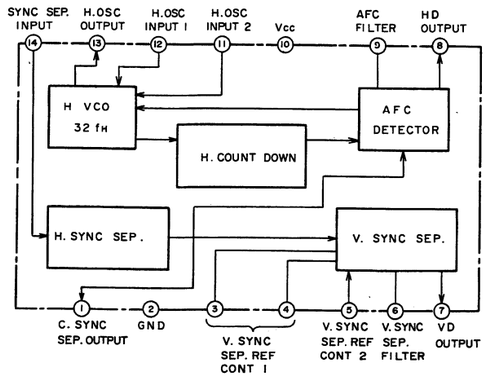

■ M62353GP-X [MITSUBISHI]
(8-Bit 8-Channel D/A Converter)

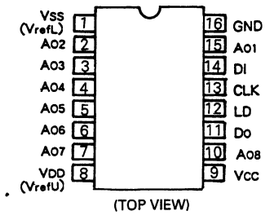

(TOP VIEW)

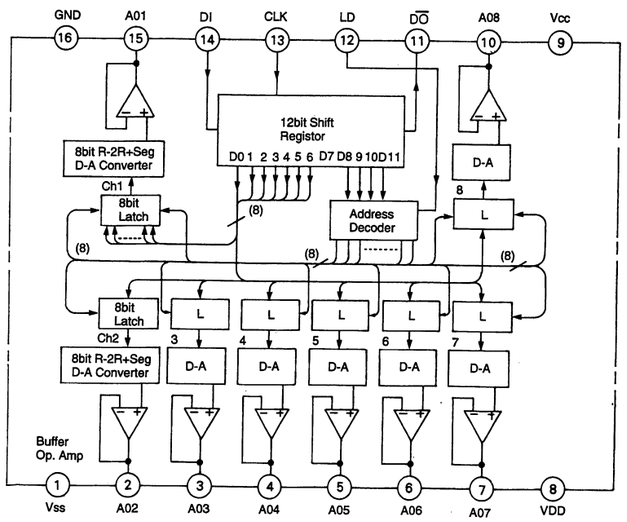

■ M65500FP [MITSUBISHI]
(Error Correcting Codes and Digital Channel Interface)

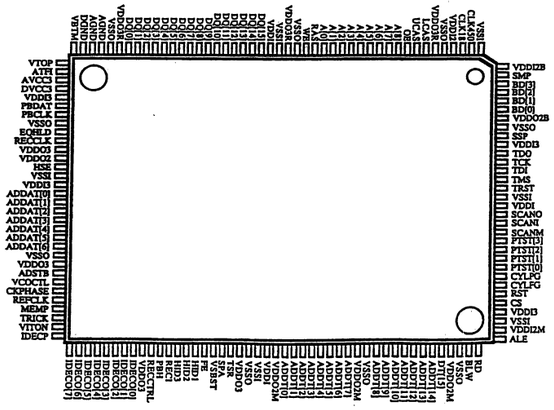

(Top View)

■ M66312FP-W [MITSUBISHI]
(8 Bit LED Driver with Shift Register and Latched 3-State Outputs)

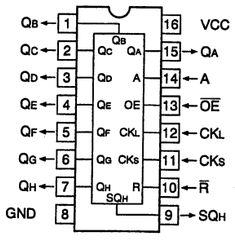

(Top View)

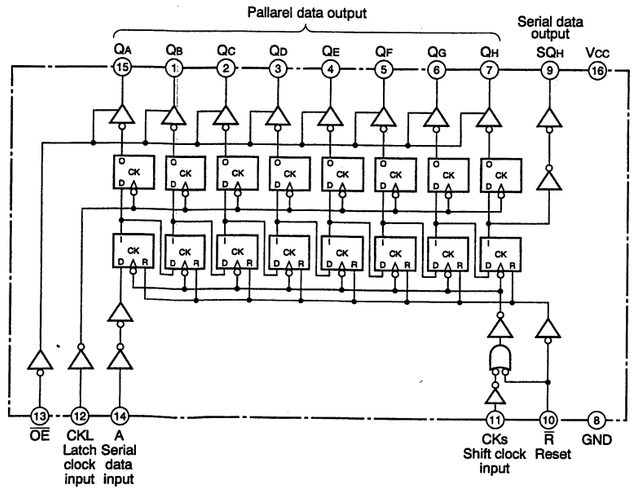

■ MAX771ESA-X [MAXIM]
(Stepup Switching Controller)

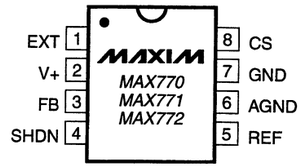

(Top View)

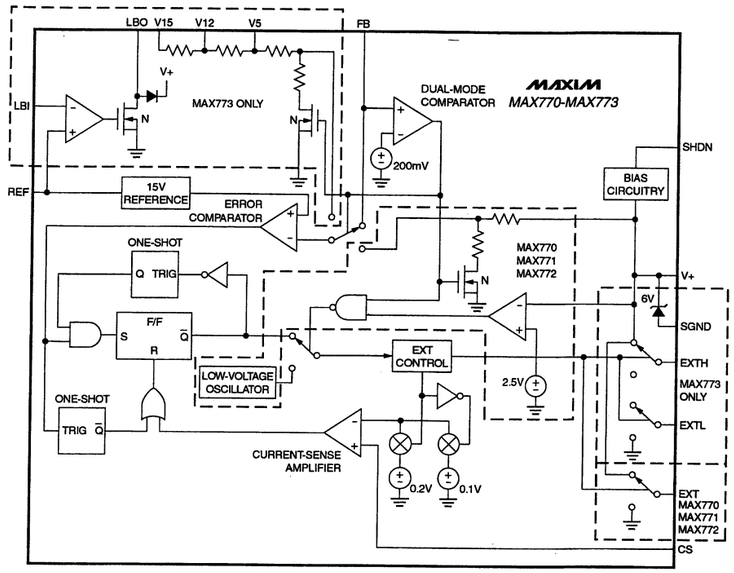

■ MAX772ESA-X [MAXIM]
(Refer to MAX771ESA-X.)

■ MM1117XF-X [MITSUMI]
(3 Input-1 Output Video Switch)

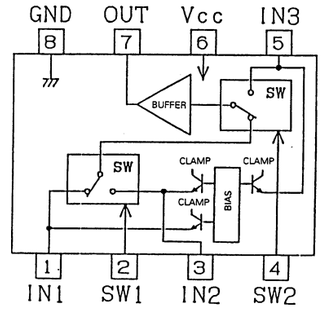

TRUTH TABLE

SW1	SW2	OUT
L	L	IN1
H	L	IN2
—	H	IN3

4-76

■ MB3782PF-X [FUJITSU]
(Switching Regulator Controller)

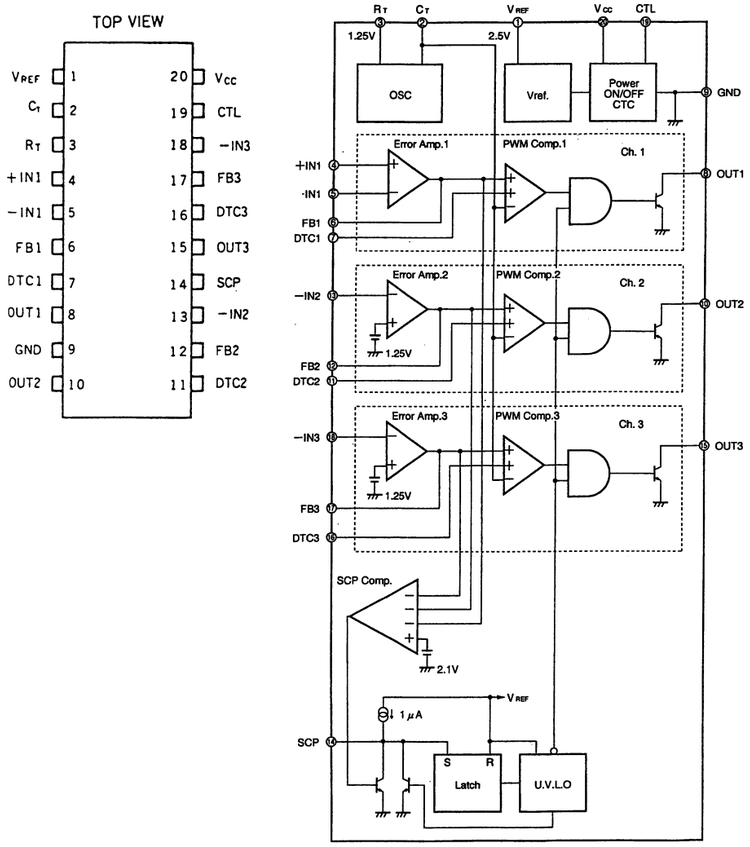

■ PLSC1063 [FUJITSU]
(2M Bit Flash Memory)

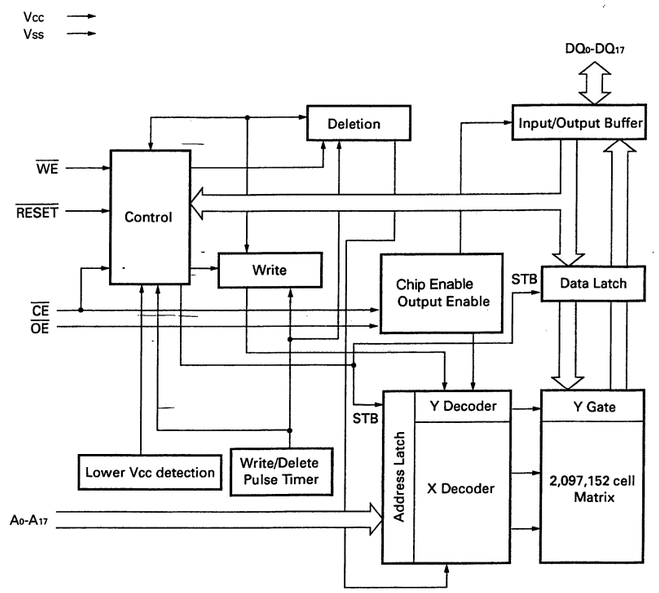

■ MB88345PF [FUJITSU]
(D/A Converter)

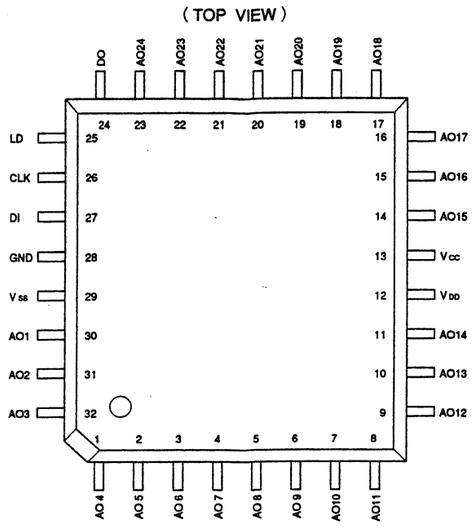

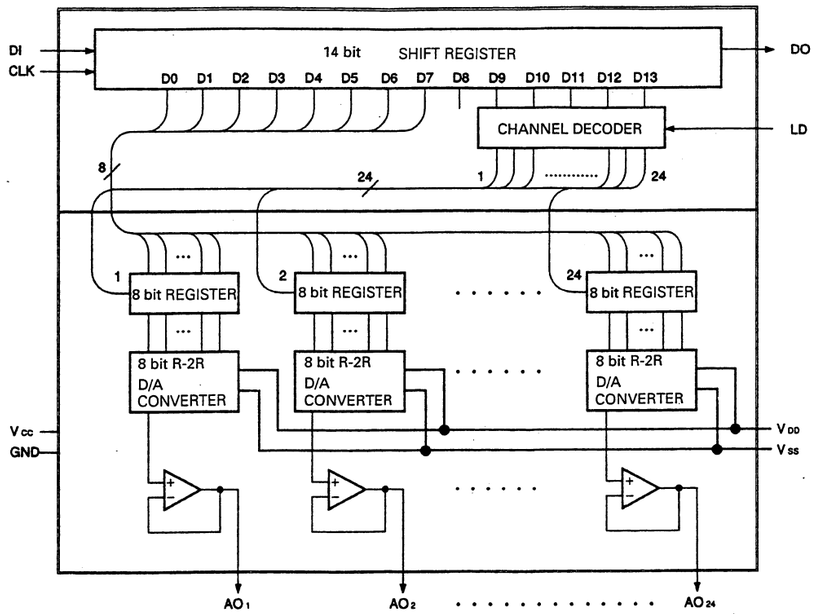

■ PLSC1278 [FUJITSU]
(Refer to PLSC1063.)

■ MB90T678BPF [MITSUBISHI]
(CPU)

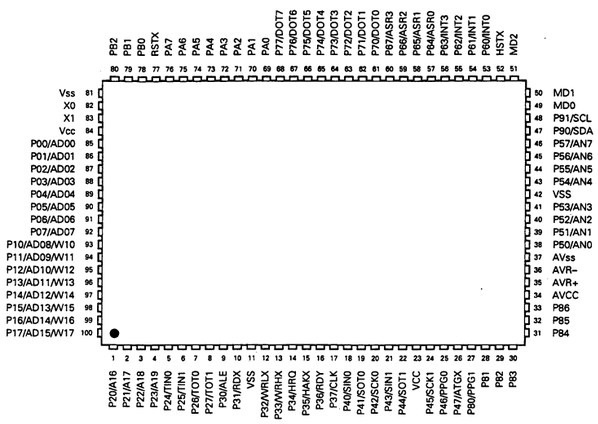

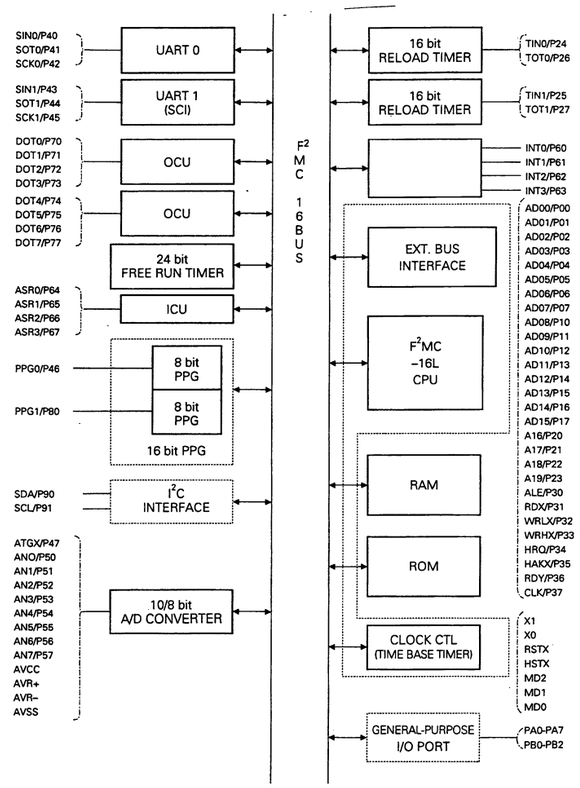

IDE-V27525 / DRUCK: 71

■ MN102F1617HL-21 [MATSUSHITA]
(16 Bit Micro Controller)

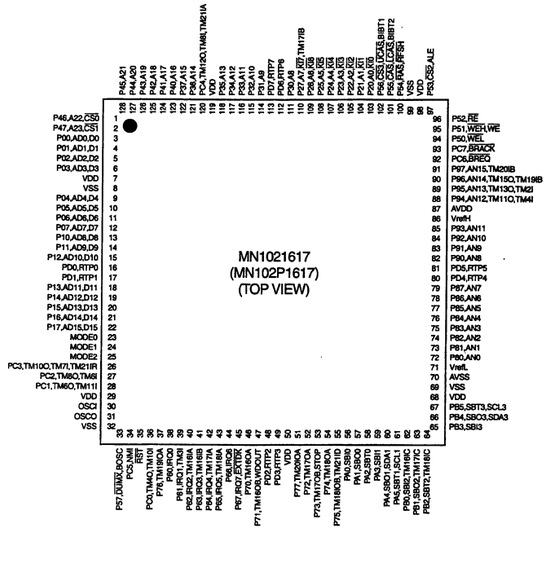

■ MN3112SA-X [MATSUSHITA]
(Vertical Driver)

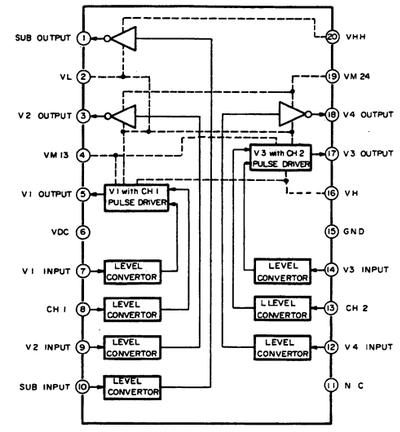

■ NJM062V-X [JRC]
(J-FET Input Op.Amp.)

(Top View)

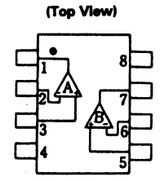

1. A OUTPUT
2. A−INPUT
3. A+INPUT
4. V⁻
5. B+INPUT
6. B−INPUT
7. B OUTPUT
8. V⁺

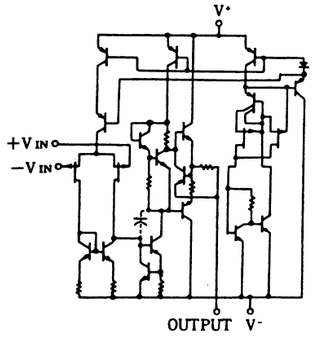

■ MN12821-QR-X [MATSUSHITA]
(Voltage Detecter)

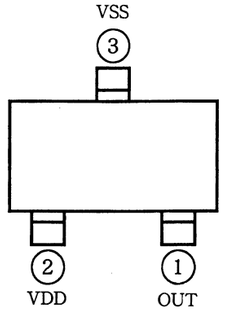

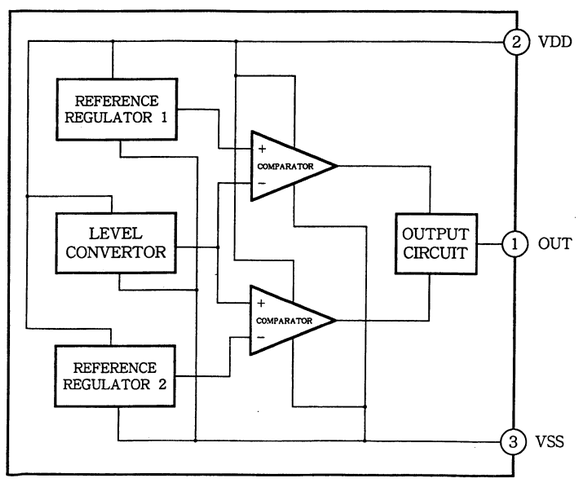

■ MN41V4260TT-A07 [MATSUSHITA]
(4M(256k-word x 16bit)Dynamic RAM)

Top View

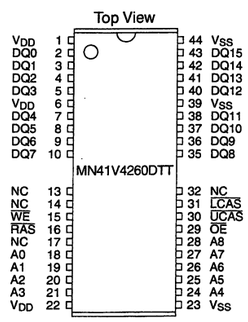

BLOCK DIAGRAM

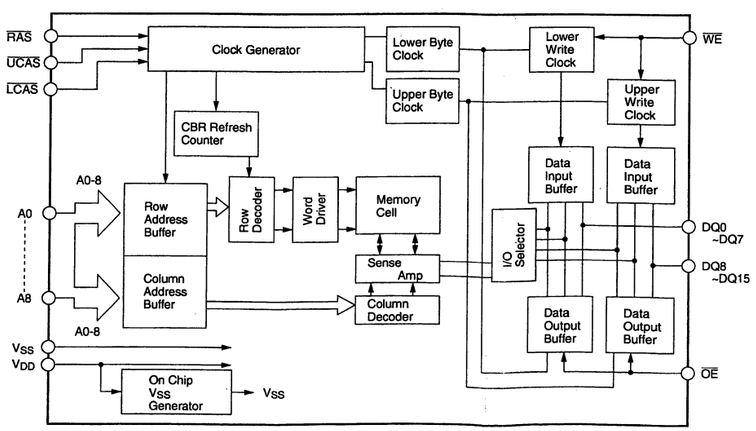

■ NJM2068M-D-X [JRC]
(Dual Low-Noise Op.Amp.)

(Top View)

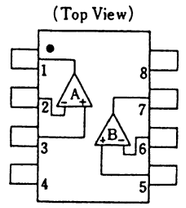

1. A OUTPUT
2. A−INPUT
3. A+INPUT
4. V⁻
5. B+INPUT
6. B−INPUT
7. B OUTPUT
8. V⁺

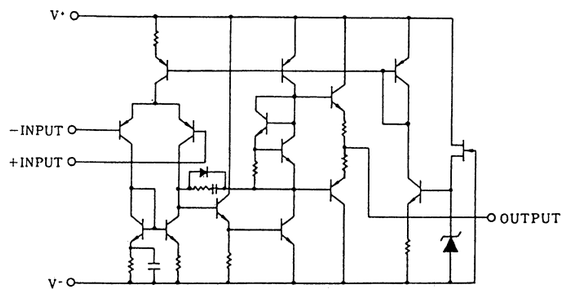

■ MN47V06AF [MATSUSHITA]
(4.75Mbit (622080 word x 8bit) CMOS DRAM)

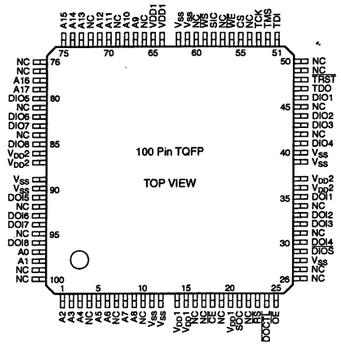

■ Pin Names

Symbol	Pin names	Symbol	Pin names
A0~A17	Address Inputs	$\overline{DIOS}$	Data Input/Output Select
$\overline{CE}$	Chip Enable	$\overline{DOCTL}$	Data Output Control
$\overline{OE}$	Output Enable	TCK	Boundary Scan Test Clock
$\overline{WE}$	Write Enable	TMS	Boundary Scan Test Mode Select
$\overline{WS}$	Write Strobe	$\overline{TRST}$	Boundary Scan Test Reset
$\overline{RS}$	Read Strobe	TDI	Boundary Scan Test Data Input
CS	Chip Select	TDO	Boundary Scan Test Data Output
SIC	Shift-in Clock	$V_{DD}1$	Internal Power Supply (2.7V~3.3V)
SOC	Shift-out Clock	$V_{DD}2$	I/F Power Supply (2.0V~$V_{DD}1$V)
DIO1~8	Data Input/Output	V_{SS}	Power Supply (GND)
DOI1~8	Data Input/Output	NC	No Connection

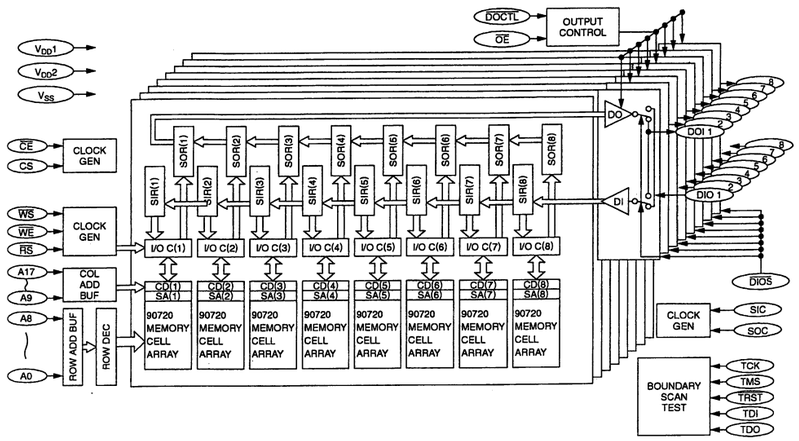

SIR : SHIFT IN REGISTER　SOR : SHIFT OUT REGISTER　I/O C : I/O CONTROLLER
CD : COLUMN DECODER　SA : SENSE AMPLIFIER　DI : DATA IN BUFFER
DO : DATA OUT BUFFER
CLOCK GEN : CLOCK GENERATOR　COL ADD BUF : COLUMN ADDRESS BUFFER
ROW ADD BUF : ROW ADDRESS BUFFER　ROW DEC : ROW DECODER

■ MN67373 [MATSUSHITA]
(Video Compress and Audio DSP at DV Format)

(Top View)

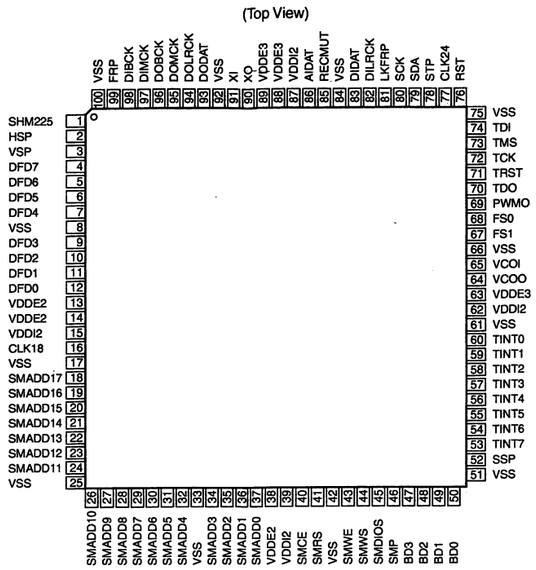

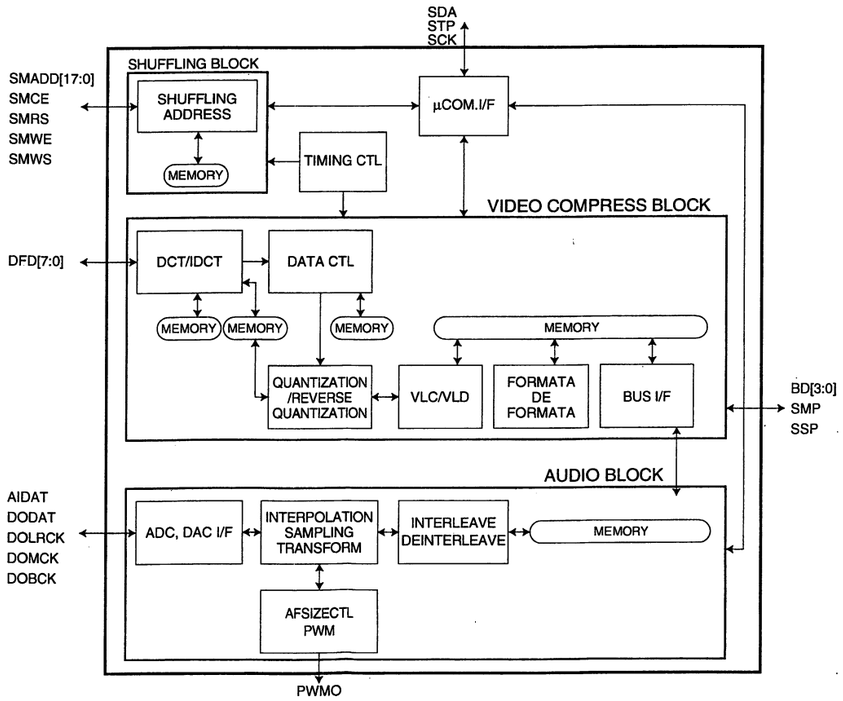

■ NJM2904M-X [JRC]
(Dual Op.Amp.)

(Top View)

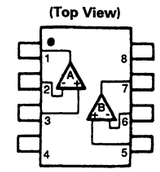

Pin Assignment

1. A OUTPUT
2. A−INPUT
3. A+INPUT
4. GND
5. B+INPUT
6. B−INPUT
7. B OUTPUT
8. V+

■ Equivalent Circuit (2 circuits in a chip)

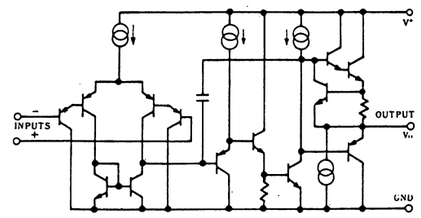

■ NJM78L05UA-X [JRC]
(3-Terminal Positive Voltage Regulator (+5V))

1. OUT
2. GND
3. IN

NJM78L00UA

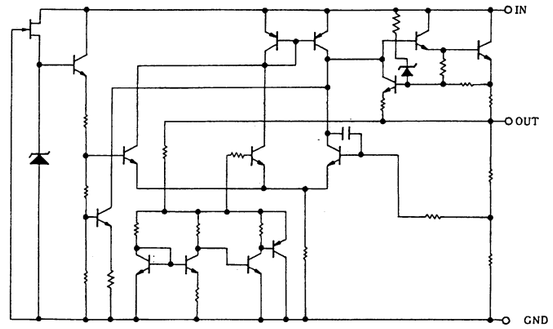

■ NJM78L15UA-X [JRC]
(Refer to NJM78L05UA-X.)

■ NJM2538V-X [JRC]
(Video Amp.)

(Top View)

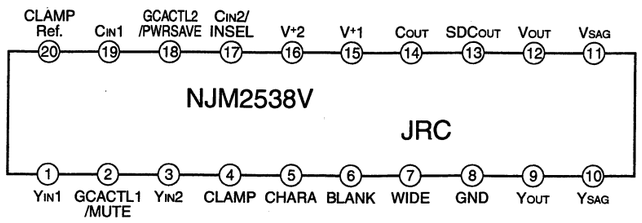

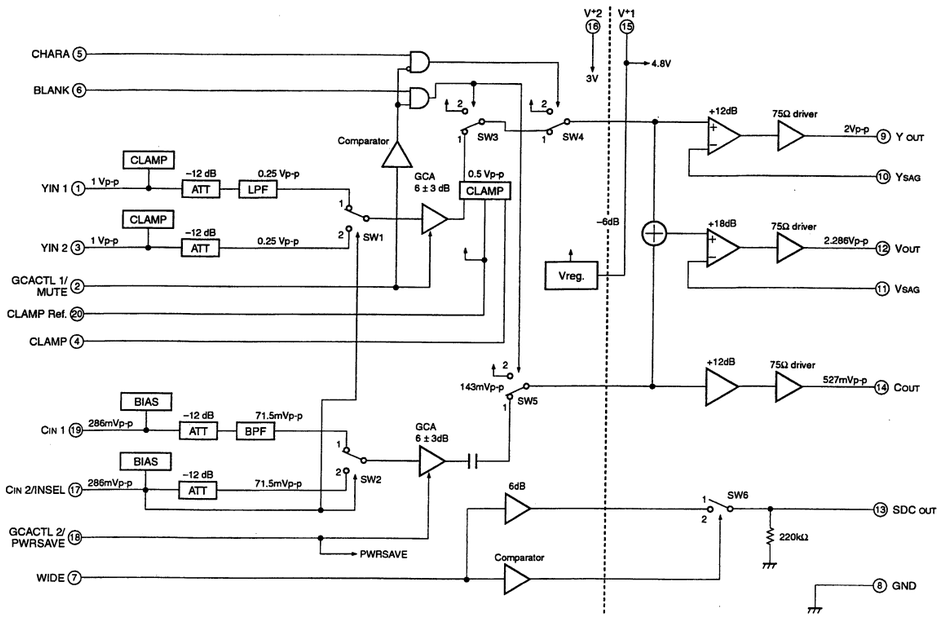

■ NM24C16LEM8-X [FAIRCHILD]
(16,384bit Standard 2-Wire Bus Interface Serial EEPROM)

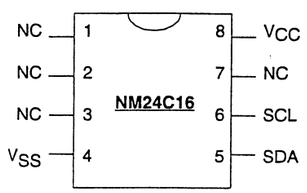

Top View

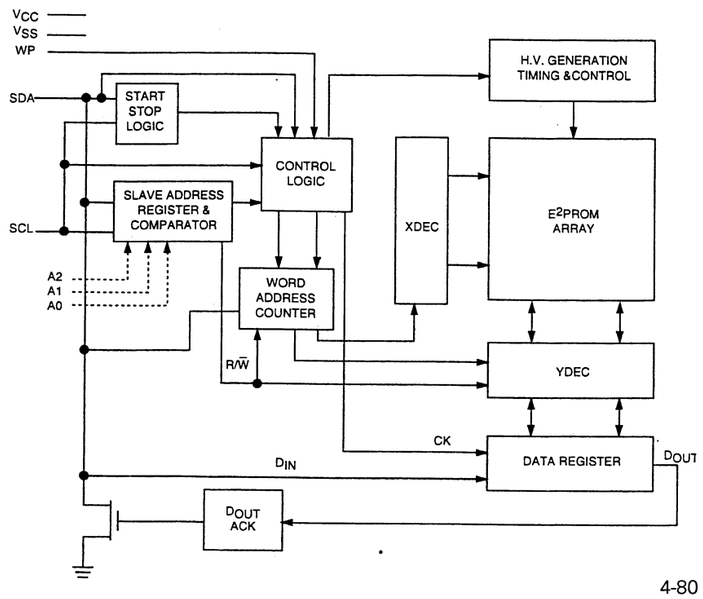

■ NM24C16LEM8-XZB [FAIRCHILD]
(Refer to NM24C16LEM8-X)

■ NJU6433FB2 [JRC]
(1/4 Duty LCD Driver)

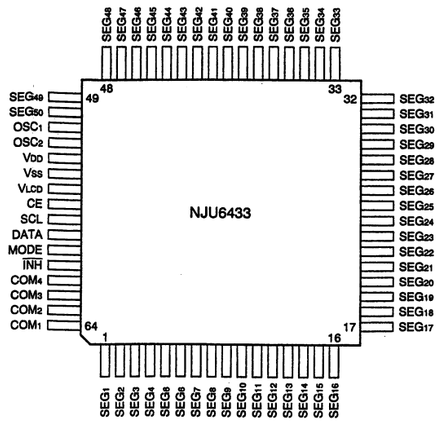

(TOP VIEW)

No.	Symbol	Function
1~50	SEG1~SEG50	Segment output for LCD driver
51 52	OSC1 OSC2	OSC terminal
53	VDD	
54	VSS	GND
55	VLCD	Power source for LCD drive
56	CE	H level : Data input Drop-down edge : Data latch L level : Disable
57	SCL	Clock input for serial data trancefar.
58	DATA	Serial data input.
59	MODE	H level : Mode seting L level : Data input for LCD display
60	$\overline{INH}$	L level : LCD is not display H level : LCD is display
61~64	COM4~COM1	Common output for LCD drive.

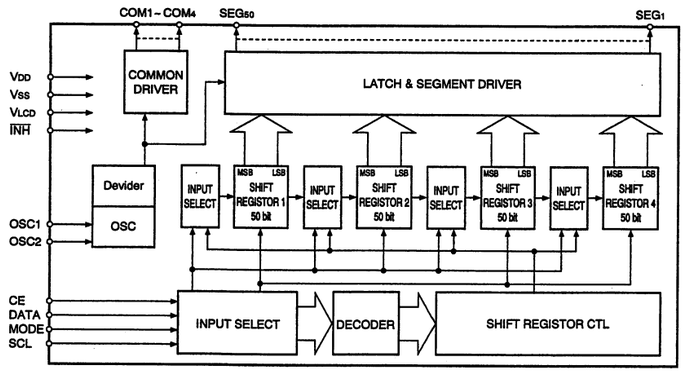

■ PLL1700E-X [BURR-BROWN]
(Programmable Dual PLL Clock Generator)

(Top View)

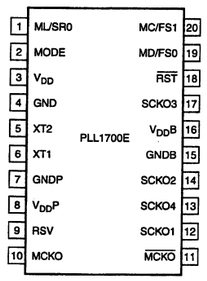

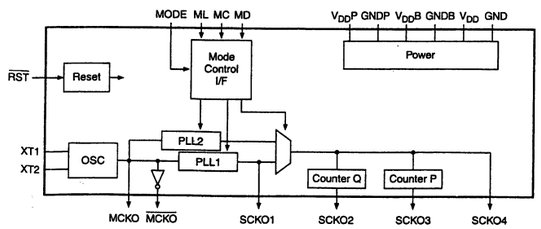

■ S-80840ANNP-W [SEIKO]
(Precision Voltage Detector)

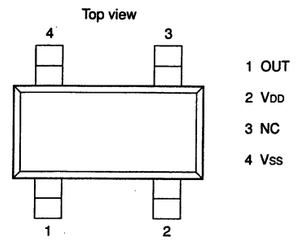

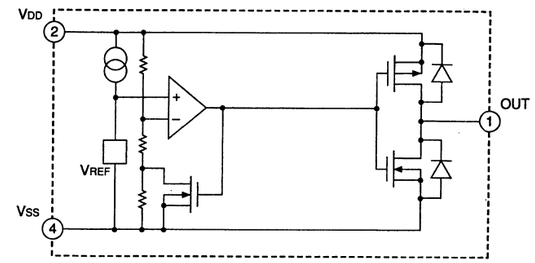

4-80

■ NM93C86AEM8-X [NATIONAL SEMICONDUCTOR] (16,384-Bit Serial Interface, Standard Voltage CMOS EEPROM)

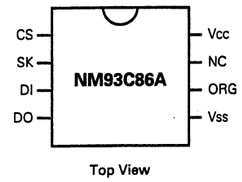

Top View

Pin Nane

Pin	Description
CS	Chip Select
SK	Serial Data Clock
DI	Serial Data Input
DO	Serial Data Output
VSS	Ground
ORG	Memory Organization Select (On the NM93C86A)
NC	No Connect
VCC	Positive Power Supply

Block Diagram

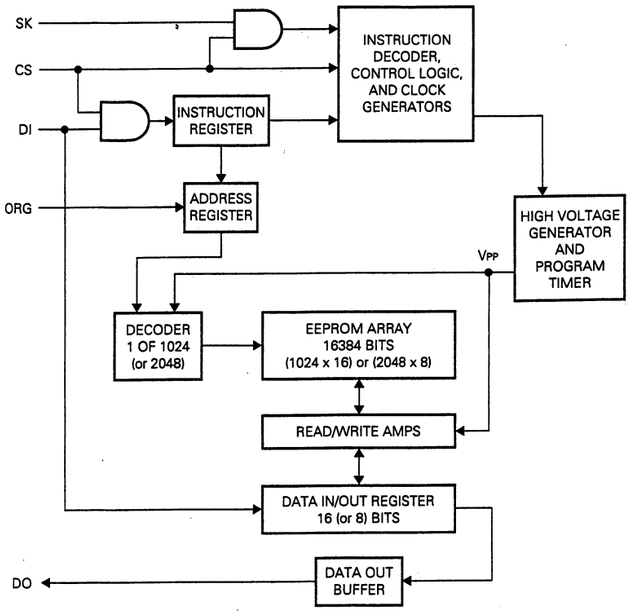

■ SN74LV08APW-X [TEXAS] (Quad 2-Input AND Gates)

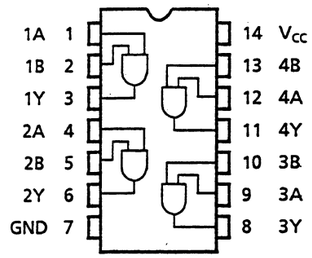

(TOP VIEW)

TRUE Table

A	B	Y
L	L	L
L	H	L
H	L	L
H	H	H

■ S-81240PG-PJ-X [SEIKO] (Voltage Regulator)

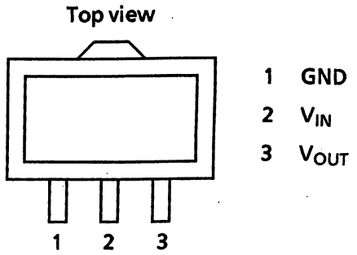

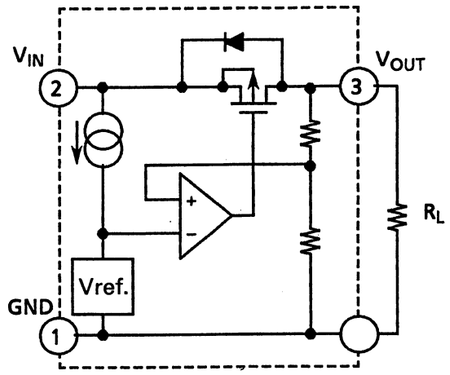

■ SN74CBT3384APWX [TEXAS] (10 Bit Cross Bar Switch)

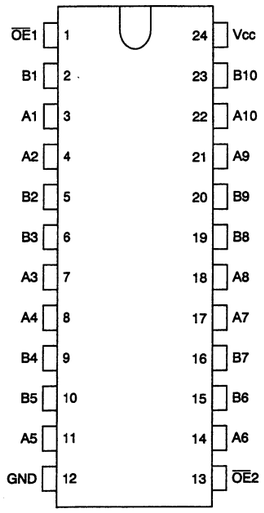

Top View

OE1	OE2	B1 – B5	B6 – B10
L	L	A1 – A5	A6 – A10
L	H	A1 – A5	Z
H	L	Z	A6 – A10
H	H	Z	Z

H : High Level
L : Low Level
X : Don't Care
Z : High Impedance

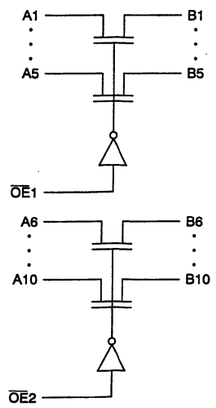

■ S-8423LFS-X [SEIKO] (Battery Back-up Selector)

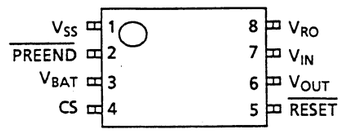

Pin name	Description
CS	Output terminal for CS voltage detector
$\overline{\text{RESET}}$	Output terminal for RESET voltage detector
$\overline{\text{PREEND}}$	Output terminal for PREEND voltage detector
VIN*	Input terminal for main power supply
VBAT*	Power input terminal for backup
VOUT*	Output terminal for voltage regulator 2
VRO*	Output terminal for voltage regulator 1
Vss	GND

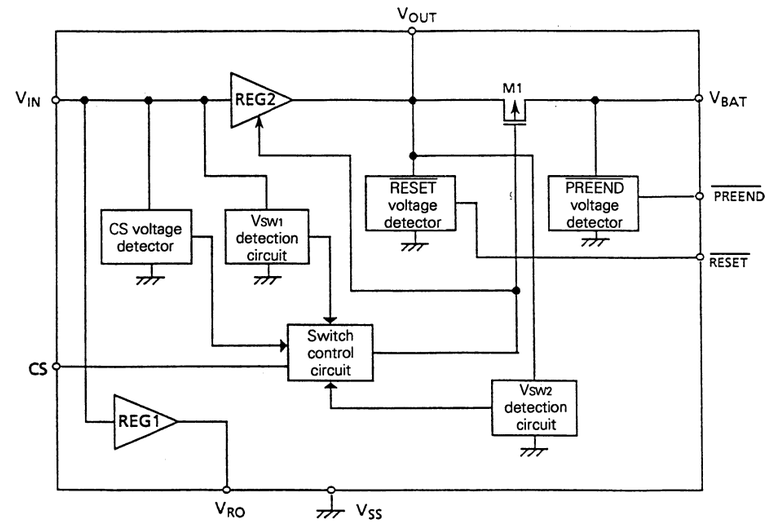

■ SN74LV125APW-X [TEXAS] (Quad Bus Buffer Gates With 3-State Outputs)

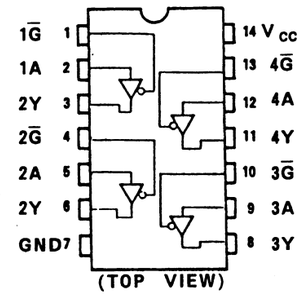

(TOP VIEW)

TC74HC125A TRUE Table

INPUTS		OUTPUTS
G	A	Y
H	X	Z
L	L	L
L	H	H

X : Don't Care
Z : High Impedance

■ TA75S01F-X [TOSHIBA] (Single Op.Amp.)

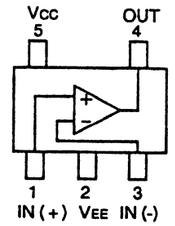

■ T9P90EF [TOSHIBA]
(A/D and D/A Converter for Video Signal)

(Top View)

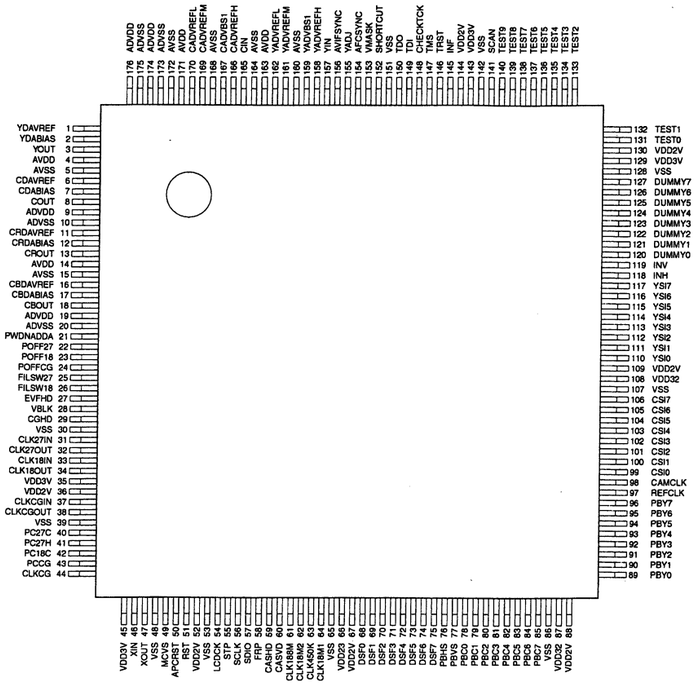

BLOCK DIAGRAM

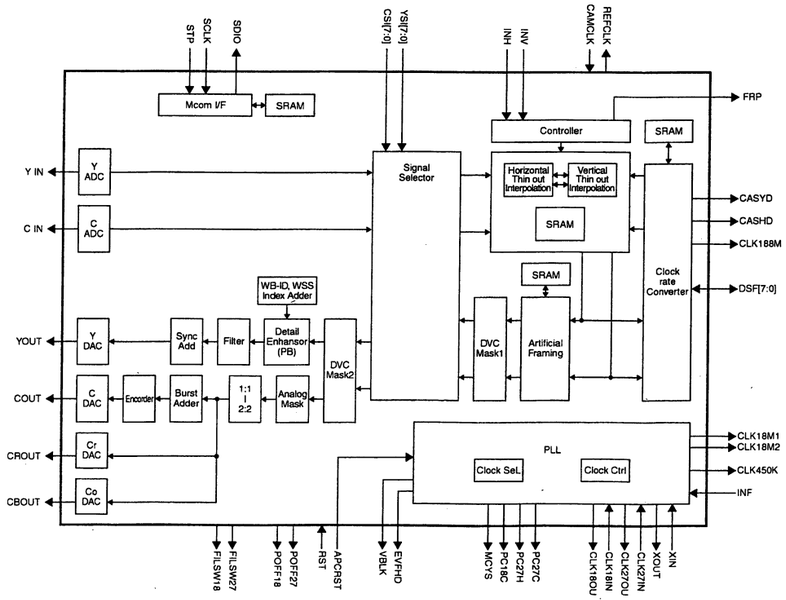

■ TC4051BF-X [TOSHIBA]
(Single 8 Channel Analog Multiplexers/Demultiplexers)

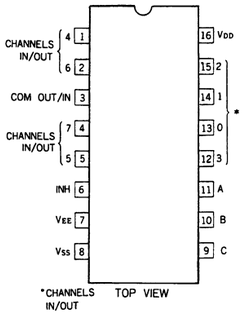

TRUTH TABLE

CONTROL INPUTS				"ON" CHANNEL
INHIBIT	C	B	A	4051
L	L	L	L	0
L	L	L	H	1
L	L	H	L	2
L	L	H	H	3
L	H	L	L	4
L	H	L	H	5
L	H	H	L	6
L	H	H	H	7
H	※	※	※	NONE

※ Don't Care.

LOGIC DIAGRAM

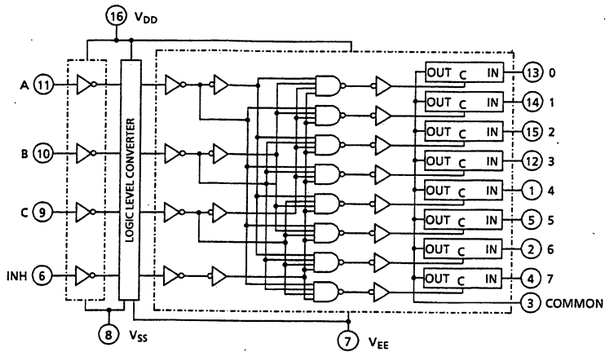

■ TC4S81F-X [TOSHIBA]
(2-Input AND Gate)

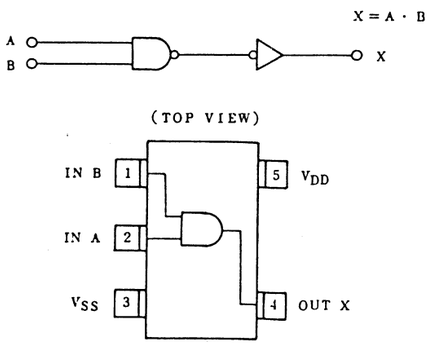

■ TC4W53F-X [TOSHIBA]
(2-Channel Multiplexer)

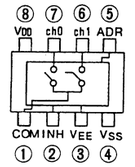

TRUE TABLE

CONTROL INPUT		ON CHANNEL
INH	ADR	
L	L	ch0
L	H	ch1
H	*	NONE

*Don't care

■ TC4W53FU-X [TOSHIBA]
(Refer to TC4W53F-X)

■ TC74HC165AF-X [TOSHIBA]
(8-Bit Serial or Parallel-In/Serial Out Shift Registers With Complementary Out)

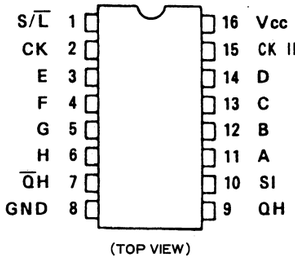

Timing chart

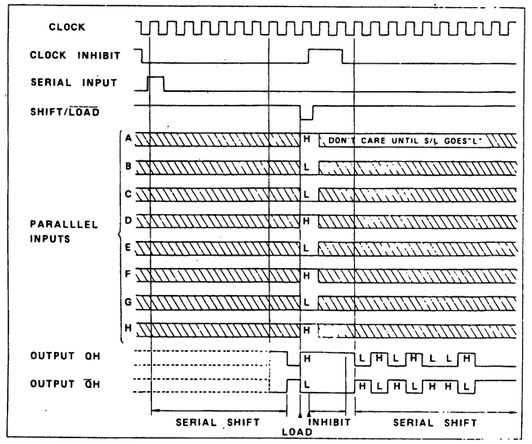

■ TC74HC4053AFT-X [TOSHIBA]
(Triple 2-Channel Analog Multiplexer/Demultiplexer)

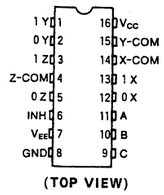

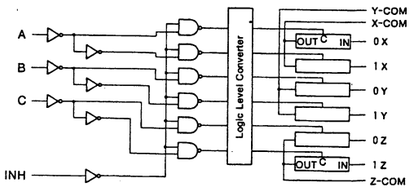

TRUE Table

CONTROL INPUTS				"ON" CHANNEL
INHIBIT	C*	B	A	HC4053A
L	L	L	L	0X, 0Y, 0Z
L	L	L	H	1X, 0Y, 0Z
L	L	H	L	0X, 1Y, 0Z
L	L	H	H	1X, 1Y, 0Z
L	H	L	L	0X, 0Y, 1Z
L	H	L	H	1X, 0Y, 1Z
L	H	H	L	0X, 1Y, 1Z
L	H	H	H	1X, 1Y, 1Z
H	X	X	X	NONE

X : DON'T CARE

■ TC74HC40103AF-X [TOSHIBA]
(8-Bit Binary Programmable Down Counter)

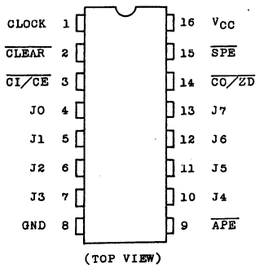

TRUE Table

CONTROL INPUTS				MODE	OPERATION
CLEAR	APE	BPE	CI/CE		
H	H	H	H	Counting inhibited	No counting notwithstanding clock is applied.
H	H	H	L	Normal counting	Counting-down starts at the rise of clock.
H	H	L	X	Synchronous preset	Data of PI terminal is preset at the rise of clock.
H	L	X	X	Asynchronous preset	Data of PI terminal is preset asynchronously with clock.
L	X	X	X	Cleared	Reset to the maximum count*.

Note: 1. X : Don't care.
2. Maximum count : "255" in TC74HC40103.

Timing chart

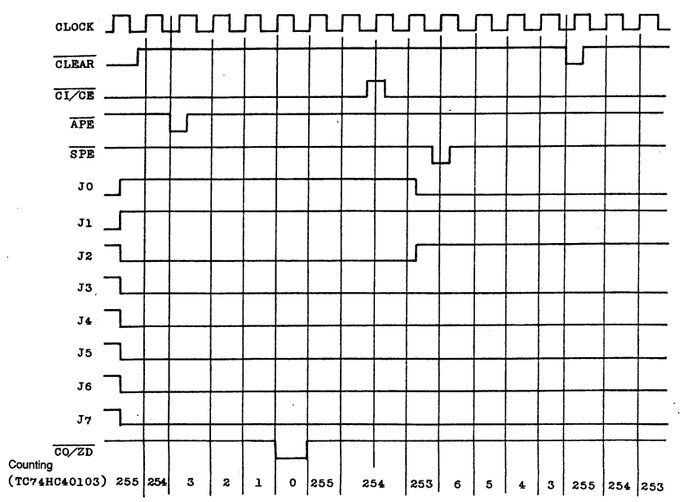

■ TC74VHC08FT-X [TOSHIBA]
(Refer to SN74LV08APW-X.)

■ TC74VHC125FT-X [TOSHIBA]
(Refer to SN74LV125APW-X.)

■ TC74VHC165FT-X [TOSHIBA]
(Refer to TC74HC165AF-X.)

■ TC74HC4538AF-X [TOSHIBA]
(Dual Retriggerable Monostable Multivibrator)

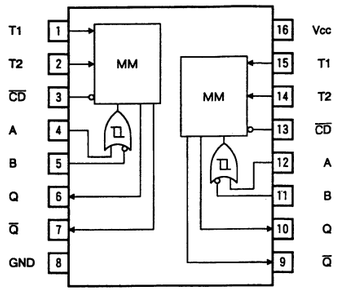

TOP VIEW

TRUE Table

INPUT			OUTPUT		NOTE
A	B	CD	Q	Q	
↑	H	H	⊓	⊔	OUTPUT ENABLE
X	L	H	L	H	INHIBIT
H	X	H	L	H	INHIBIT
L	↓	H	⊓	⊔	OUTPUT ENABLE
X	X	L	L	H	INHIBIT

X:Don't Care

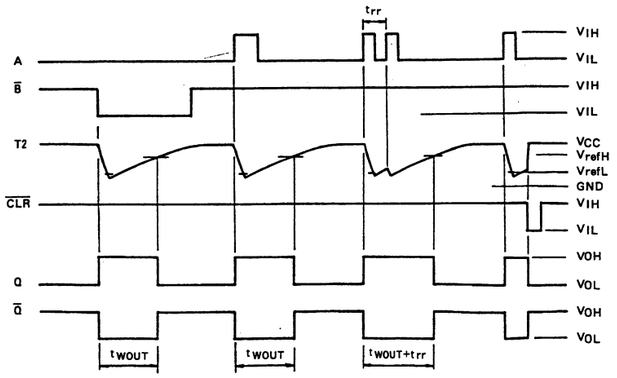

■ TC74HC4538AFS-X [TOSHIBA]
(Refer to TC74HC4538AF-X.)

■ TC74VHC04FT-X [TOSHIBA]
(Hex Inverters)

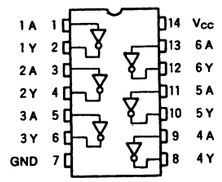

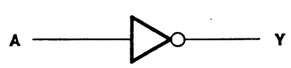

■ TC74VHC139FT-X [TOSHIBA]
(Dual 2-Line to 4-Lile Decoders/Demultiplexers)

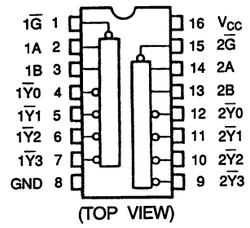

TRUE Table

INPUTS			OUTPUTS				SELECTED OUTPUT
ENABLE	SELECT						
G	B	A	Y0	Y1	Y2	Y3	
H	X	X	H	H	H	H	NONE
L	L	L	L	H	H	H	Y0
L	L	H	H	L	H	H	Y1
L	H	L	H	H	L	H	Y2
L	H	H	H	H	H	L	Y3

X : Don't care

■ TC74VHC157FT-X [TOSHIBA]
(Quad 2-Line to 1-Line Data Selectors/Multiplexers,NON-Inverted Data Outputs)

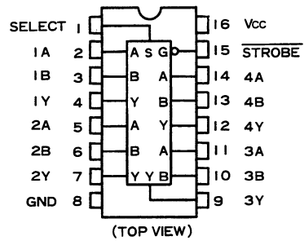

TRUE Table

INPUTS				OUTPUT
STROBE	SELECT	A	B	Y
H	X	X	X	L
L	L	L	X	L
L	L	H	X	H
L	H	X	L	L
L	H	X	H	H

X:DON'T CARE

■ TC74VHC244FT-X [TOSHIBA]
(Octal Buffers AND Line Drivers With NON-Inverted 3-State Outputs)

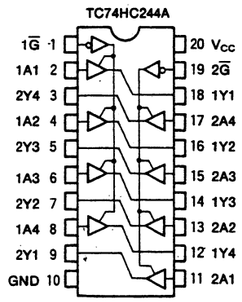

TRUE Table

INPUTS		OUTPUTS
G	An	Yn
L	L	L
L	H	H
H	X	Z

X : Don't Care
Z : High Impedance

■ TC74VHC373FT-X [TOSHIBA]
(Octal D-Type Latch With NON-Inverted 3-State Output)

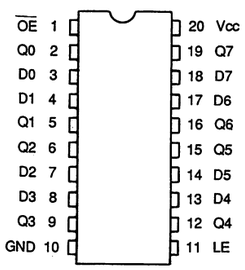

TRUE Table

INPUTS			OUTPUTS
OE	LE	D	
H	X	X	Z
L	L	X	Qn
L	H	L	L
L	H	H	H

X : Don't Care
Z : Hi impedance
Qn : Q output level before the LE become "L".

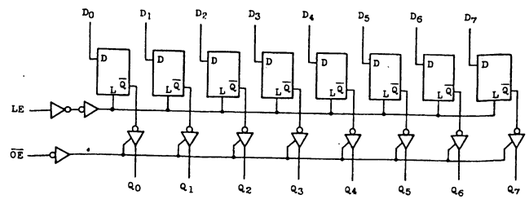

4-83

■ TC74VHC574FT-X [TOSHIBA]
(Octal D-Type EDGE-Trigger Flip-Flop With NON Inverted 3-State Outputs)

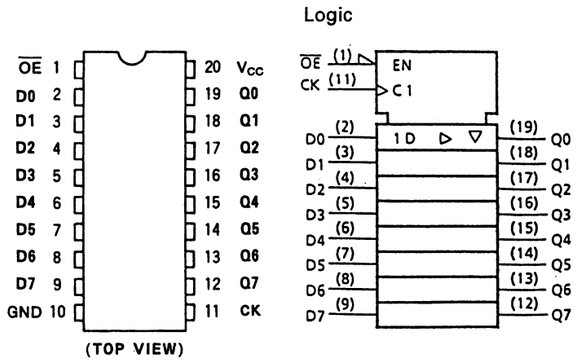

INPUTS			OUTPUT
$\overline{OE}$	CK	D	
H	X	X	Z
L	↑	X	Q_n
L	↓	L	L
L	↓	H	H

X : Don't Care
Z : High Impedance
Qn : No Change

■ TC74VHC74FT-X [TOSHIBA]
(Dual D-Type Positive-EDGE-Triggered Flip-Flops With Preset AND Clear)

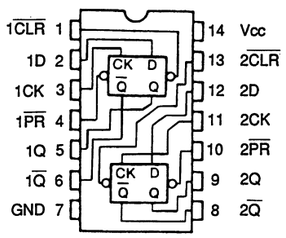

TRUE Table

INPUTS				OUTPUTS		FUNCTION
$\overline{CLR}$	$\overline{PR}$	D	CK	Q	$\overline{Q}$	
L	H	X	X	L	H	CLEAR
H	L	X	X	H	L	PRESET
L	L	X	X	H	H	—
H	H	L	↑	L	H	—
H	H	H	↑	H	L	—
H	H	X	↓	Q_n	$\overline{Q}_n$	NO CHANGE

X : Don't care

■ TC74VHCT541AFTX [TOSHIBA]
(Octal Bus Buffer With Inverted 3-State Outputs)

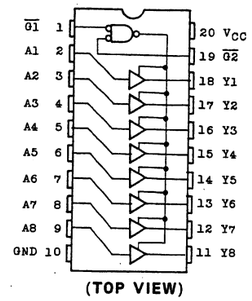

TRUE Table

INPUT			OUTPUT
$\overline{G1}$	$\overline{G2}$	A	Y
L	L	H	H
L	L	L	L
H	X	X	Z
X	H	X	Z

■ TC7S02FU-X [TOSHIBA]
(2 Input Single NOR Gate)

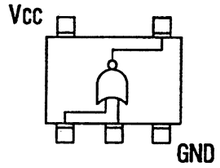

■ TC7S08FU-X [TOSHIBA]
(2 Input Single AND Gate)

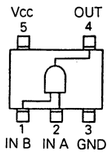

TRUE Table

A	B	X
L	L	L
L	H	L
H	L	L
H	H	H

■ TC7S14FU-X [TOSHIBA]
(Schmitt trigger)

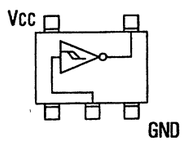

■ TC7S66FU-X [TOSHIBA]
(Analog SW)

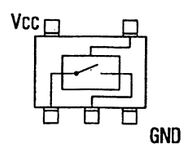

■ TC7SET04FU-X [TOSHIBA]
(Single Inverter Gate)

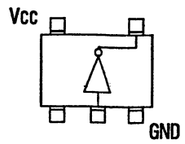

■ TC7SH04FU-X [TOSHIBA]
(Inverter)

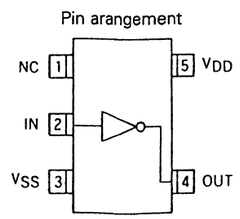

■ TC7SH00F-X [TOSHIBA]
(2 Input NAND Gate)

(Top View)

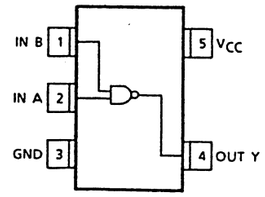

TRUE Table

A	B	Y
L	L	H
L	H	H
H	L	H
H	H	L

■ TC7SH00FU-X [TOSHIBA]
(2-Input NAND Gate)

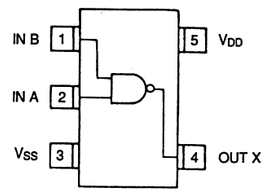

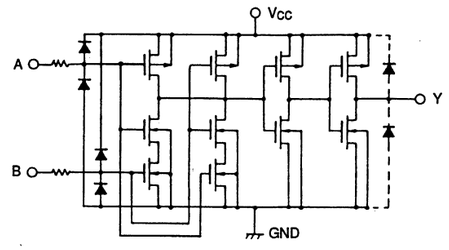

TRUE Table

A	B	X
L	L	H
L	H	H
H	L	H
H	H	L

■ TC7SH08F-X [TOSHIBA]
(Refer to TC7S08FU-X.)

■ TC7SH08FU-X [TOSHIBA]
(Refer to TC7S08FU-X.)

■ TC7W00FU-X [TOSHIBA]
(2 Input Dual NAND Gate)

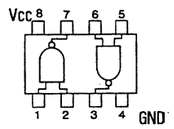

TRUE Table

A	B	X
L	L	H
L	H	H
H	L	H
H	H	L

■ TC7SH32FU-X [TOSHIBA]
(2 Input Single OR Gate)

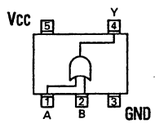

TRUE Table

A	B	Y
H	H	H
L	H	H
H	L	H
L	L	L

■ TC7SHU04FU-X [TOSHIBA]
(Refer to TC7SH04FU-X.)

■ TC7SU04FU-X [TOSHIBA]
(Refer to TC7SH04FU-X.)

■ TC7W04FU-X [TOSHIBA]
(Triple Inverter Gate)

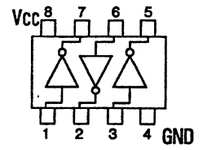

■ TC7W126FU-X [TOSHIBA]
(Dual Bus Buffer)

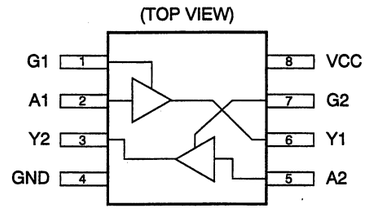

Truth Table

INPUTS		OUTPUTS
G	A	Y
L	X	Z
H	L	L
H	H	H

X : Don't Cate
Z : High Impedance

VIDE-V27525 / DRUCK: 78

■ TC7W14FU-X [TOSHIBA]
(Schmitt Trigger Triple Inverte Gate)

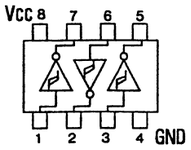

■ TC7W66FU-X [TOSHIBA]
(Dual Birateral Switch)

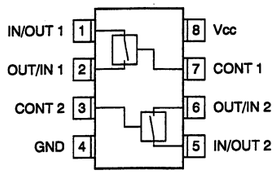

■ TC7W74FU-X [TOSHIBA]
(D-Q Flip-Flop)

(TOP VIEW)

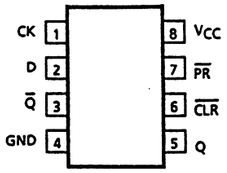

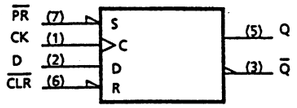

TRUE Table

INPUTS				OUTPUTS		FUNCTION
$\overline{CLR}$	$\overline{PR}$	D	CK	Q	$\overline{Q}$	
L	H	×	×	L	H	CLEAR
H	L	×	×	H	L	PRESET
L	L	×	×	H	H	—
H	H	L	↑	L	H	—
H	H	H	↑	H	L	—
H	H	×	↓	Q_n	$\overline{Q}_n$	NO CHANGE

× : Don't care

■ TLC2932IPW-X [TEXAS]
(PLL)

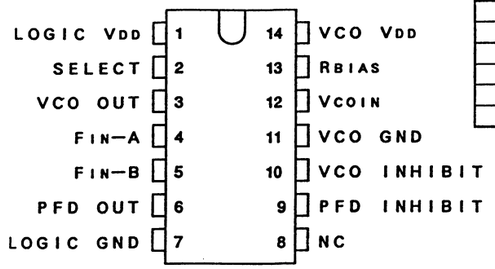

■ TC7WT241FU-X [TOSHIBA]
(Dual Bus Buffer Non Inverted 3-State Outputs)

(TOP VIEW)

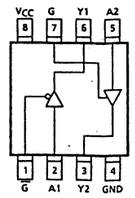

TRUTH TABLE

INPUTS			OUTPUTS
$\overline{G}$	G	A	Y
L	H	L	L
L	H	H	H
H	L	×	Z

× : Don't Care
Z : High Impedance

■ UPC812G2-X [NEC]
(Op.Amp.)

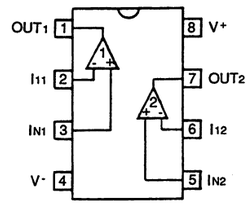

■ TSB13LV11PBW [TEXAS]
(IEEE1394 LINK/PHY)

(TOP VIEW)

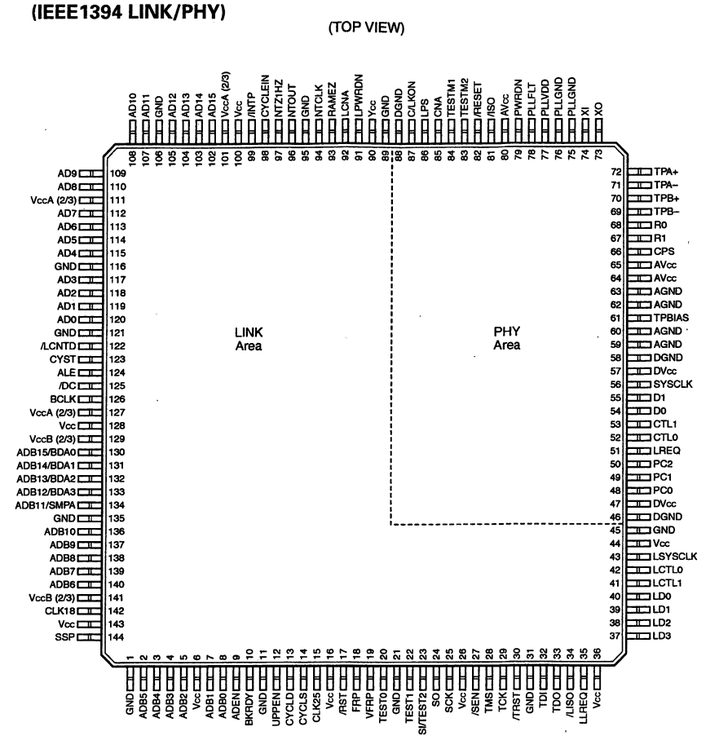

■ UPD6461GS-913 [NEC]
(On Screen Charactor Display)

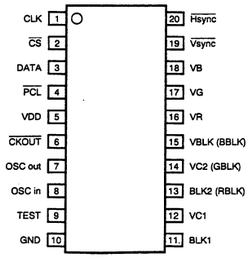

(Top View)

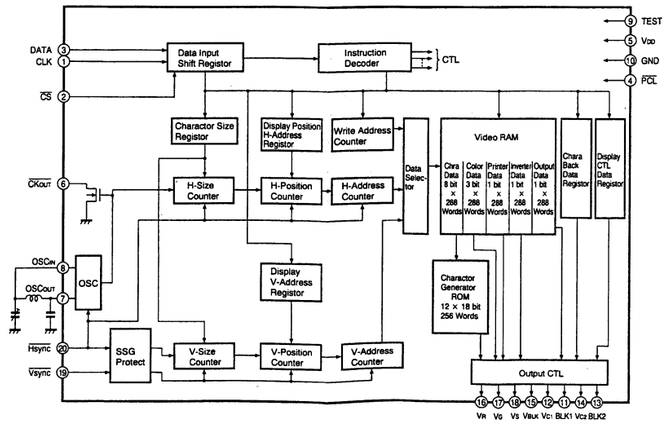

■ UPC2384GA [NEC]
(Digital VTR PLL)

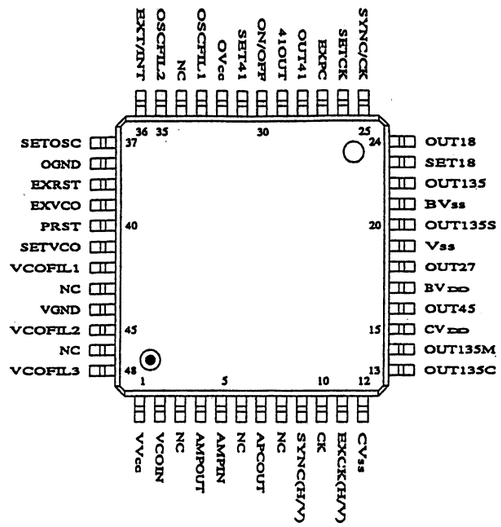

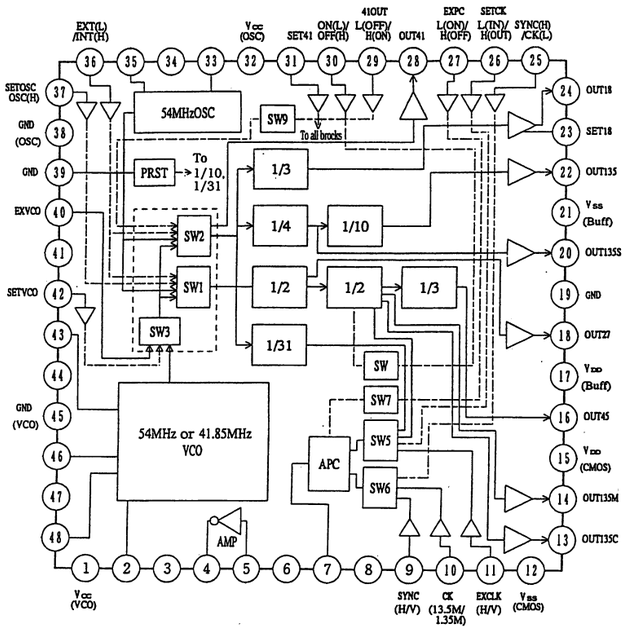

4-85

■ UPD71055GB-10 [NEC]
(Parallel Input/Output Port)

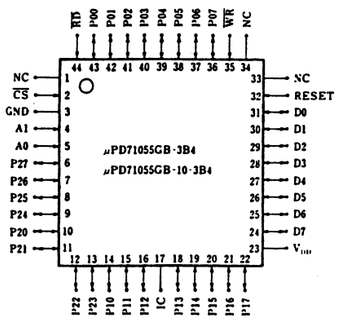

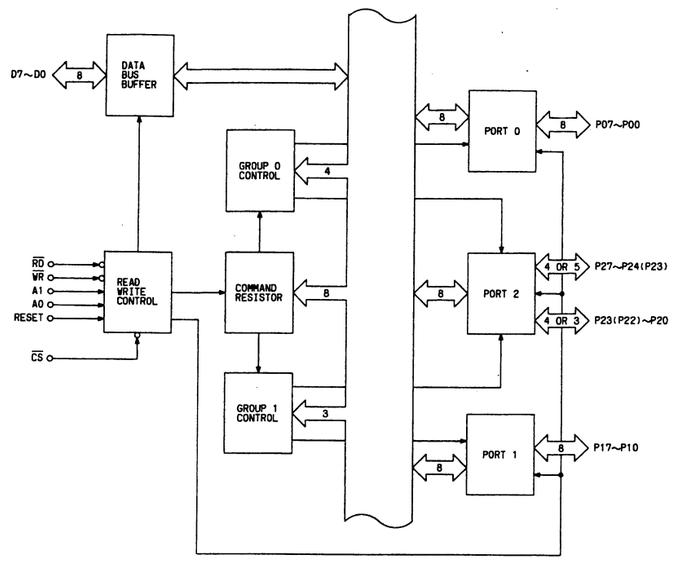

■ UPD78P058BT [NEC]
(8 Bit Single Chip Microcomputer)

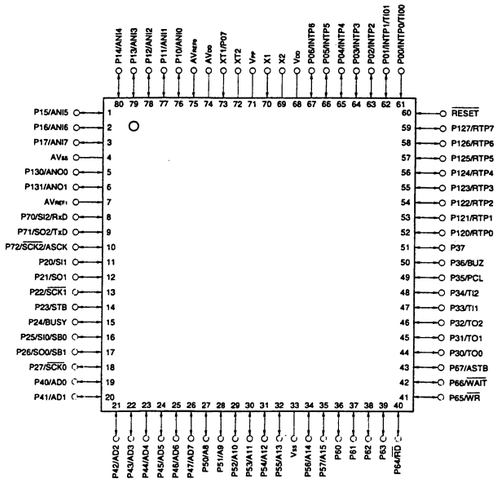

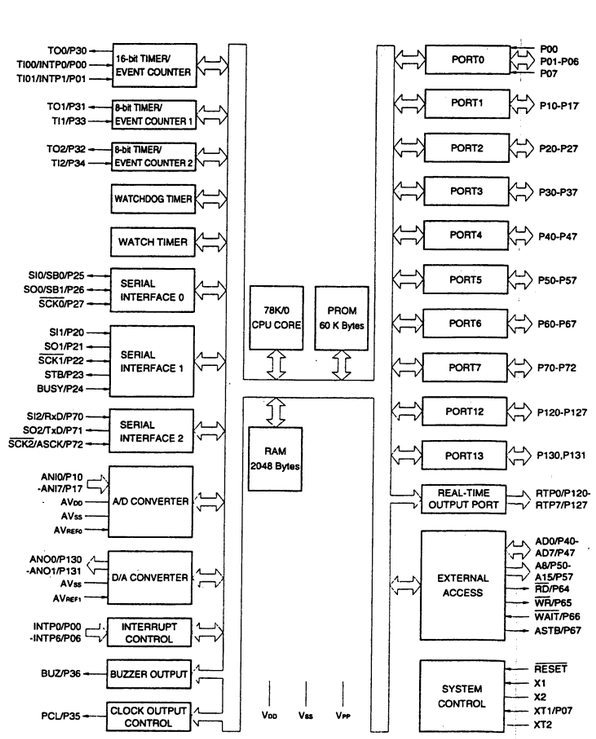

P00-P07	: Port0	SB0, SB1	: Serial Bus	WAIT	: Wait
P10-P17	: Port1	SI0-SI2	: Serial Input	ASTB	: Address Strobe
P20-P27	: Port2	SO0-SO2	: Serial Output	X1, X2	: Crystal (Main System Clock)
P30-P37	: Port3	SCK0-SCK2	: Serial Clock	XT1, XT2	: Crystal (Subsystem Clock)
P40-P47	: Port4	RxD	: Receive Data	RESET	: Reset
P50-P57	: Port5	TxD	: Transmit Data	ANI0-ANI7	: Analog Input
P60-P67	: Port6	ASCK	: Asynchronous Serial Clock	ANO0, ANO1	: Analog Output
P70-P72	: Port7	PCL	: Programmable Clock	AVDD	: Analog Power Supply
P120-P127	: Port12	BUZ	: Buzzer Clock	AVSS	: Analog Ground
P130, P131	: Port13	STB	: Strobe	AVREF0, 1	: Analog Reference Voltage
RTP0-RTP7	: Real-Time Output Port	BUSY	: Busy	VDD	: Power Supply
INTP0-INTP6	: Interrupt from Peripherals	AD0 AD7	: Address/Data Bus	VPP	: Programming Power Supply
TI00, TI01	: Timer Input	A8-A15	: Address Bus	VSS	: Ground
TI1, TI2	: Timer Input	RD	: Read Strobe		
TO0-TO2	: Timer Output	WR	: Write Strobe		

■ UPD784031GK-BE9 [NEC]
(16bit Single Chip Micro Computer)

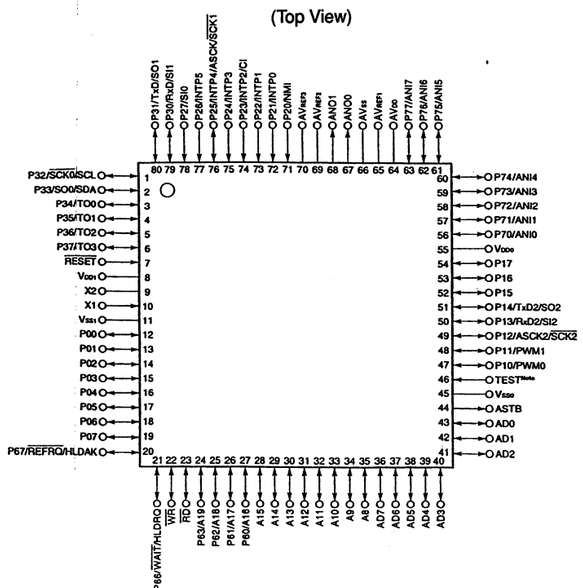

Note Connect the TEST pin to Vsso directly.

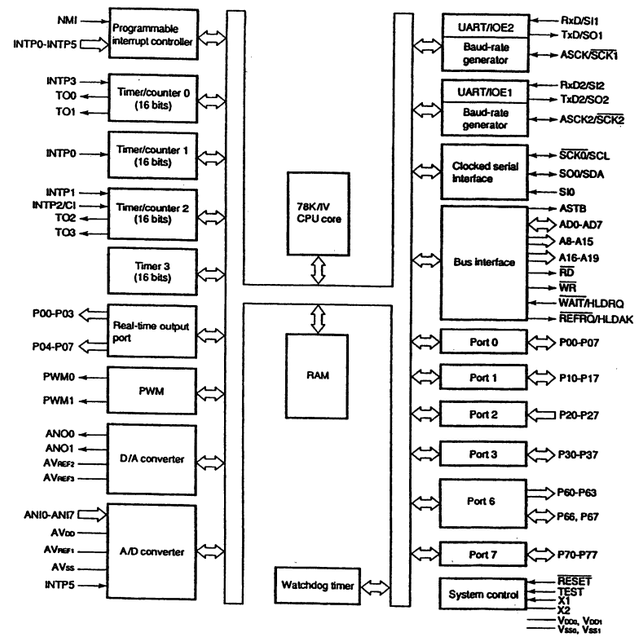

■ X24645S8-2.7-X [XICOR]
(8K x 8bit CMOS Serial EEPROM)

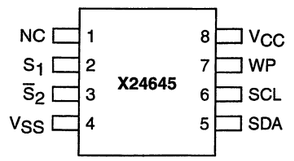

PIN NAMES

Symbol	Description
$S_1, \overline{S_2}$	Device Select Inputs
SDA	Serial Data
SCL	Serial Clock
WP	Write Protect
V_{SS}	Ground
V_{CC}	Supply Voltage
NC	No Connect

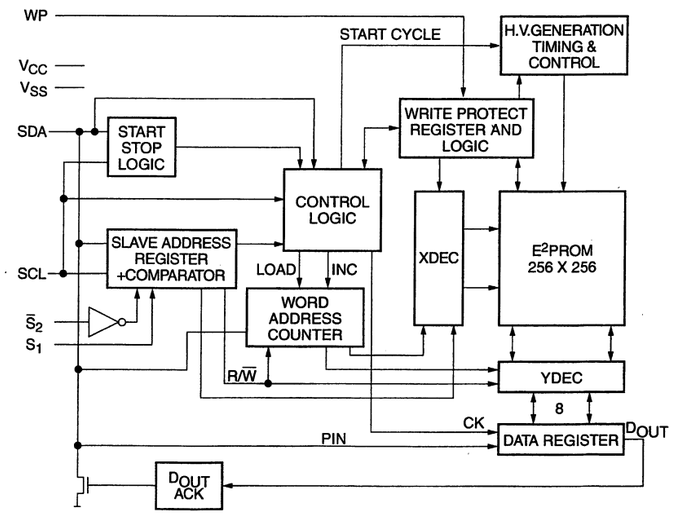

■ X25057M8-2.7-X [XICOR] (SPI Serial EEPROM)

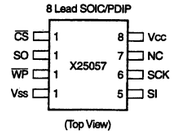

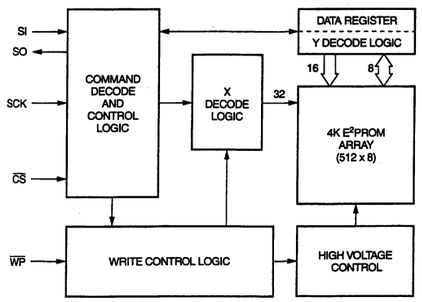

■ 74LCX16244MTD-X [NATIONAL SEMI CONDUCTOR] (16 bit Buffer/Line Driver)

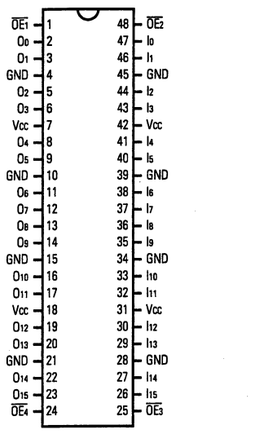

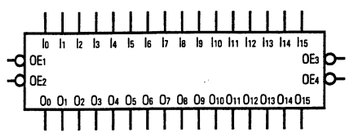

■ 74LCX16374MTD-X [NATIONAL SEMI CONDUCTOR] (16 bit D-Type Flip-Flop)

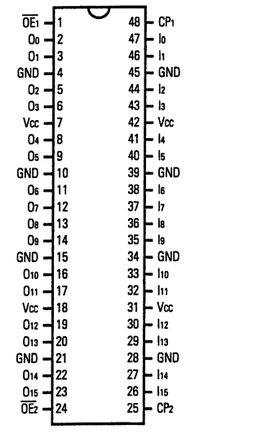

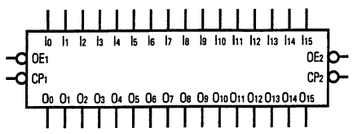

■ XC95144X10T-002 [XILINX] (SSG)

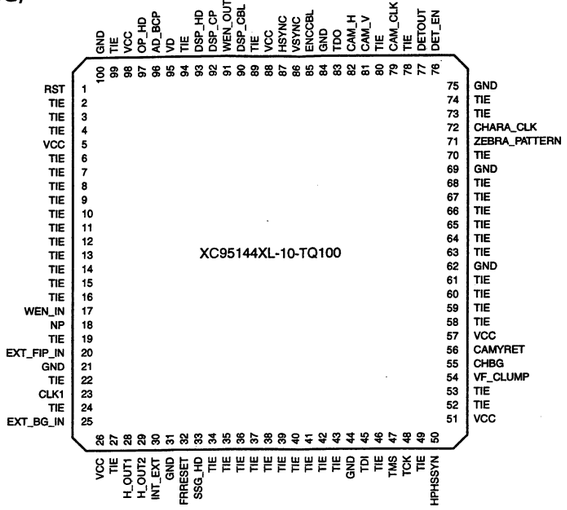

Legend : TIE = Tie pin to GND or board trace driven to valid logic level
VCC = Dedicated Power Pin
GND = Dedicated Ground Pin
TDI = Test Data In, JTAG pin
TDO = Test Data Out, JTAG pin
TCK = Test Clock, JTAG pin
TMS = Test Mode Select, JTAG pin
PROHIBITED = User reserved pin

BLOCK DIAGRAM

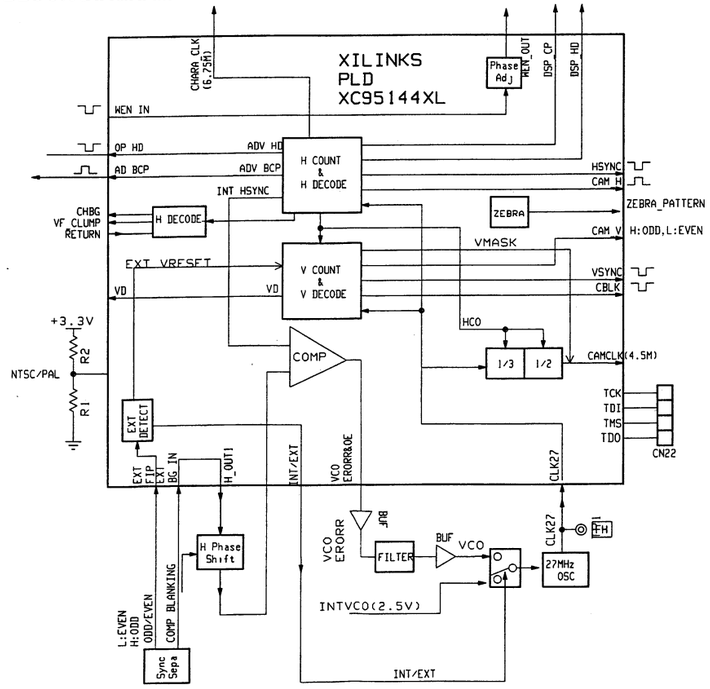

NTSC H-Timing Chart

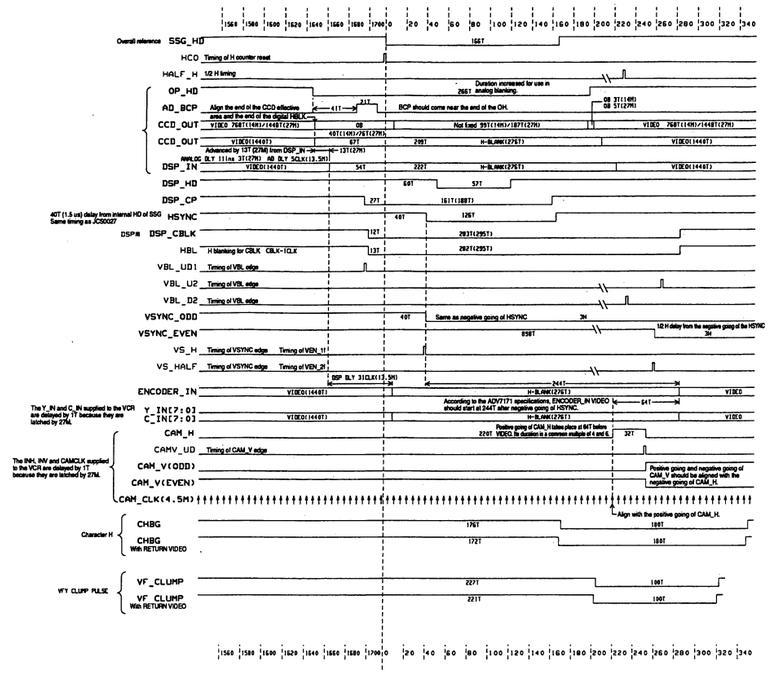

NTSC 1st Field Timing Chart

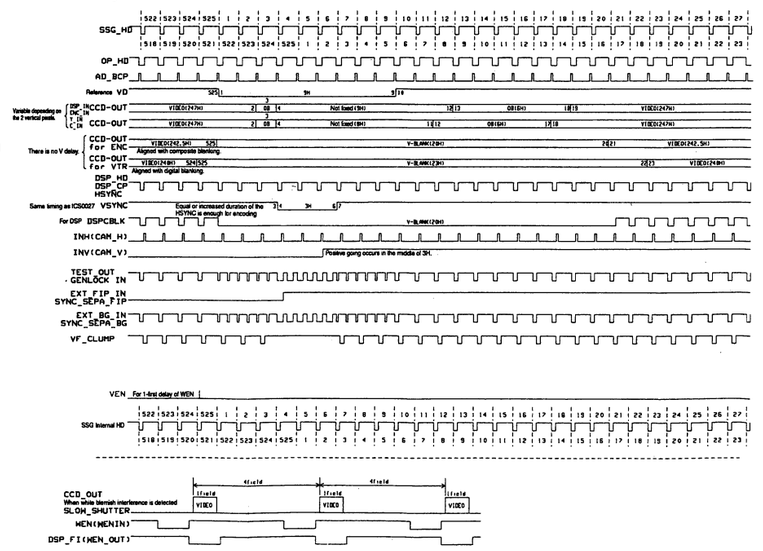

NTSC 2nd Field Timing Chart

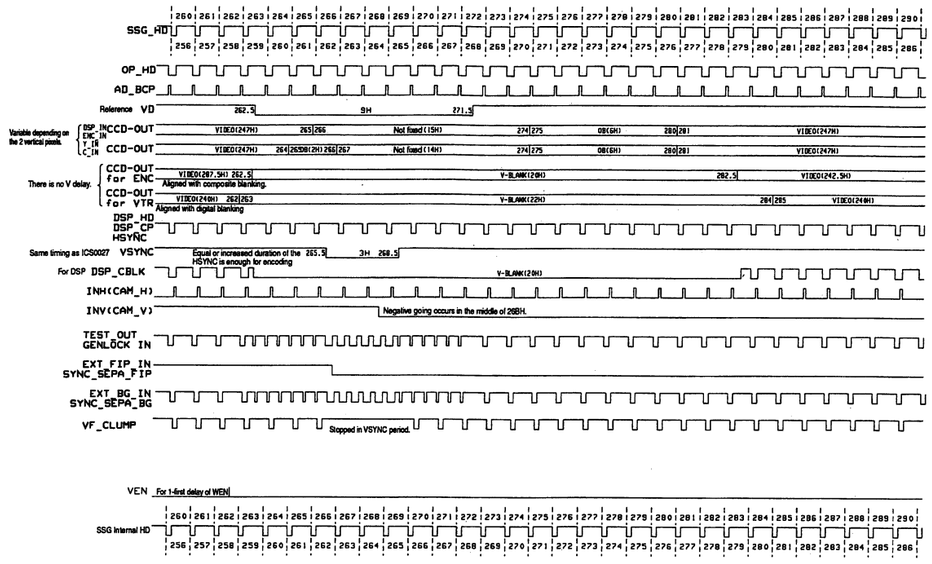

PAL H-Timing Chart

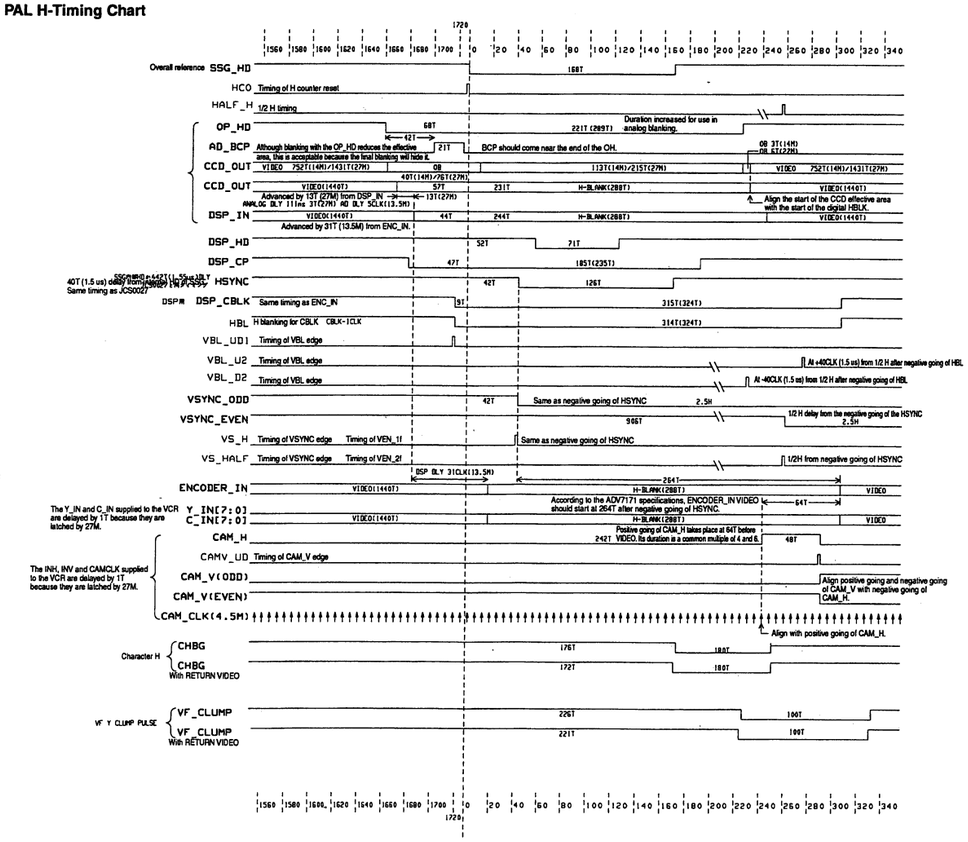

PAL 1st Field Timing Chart

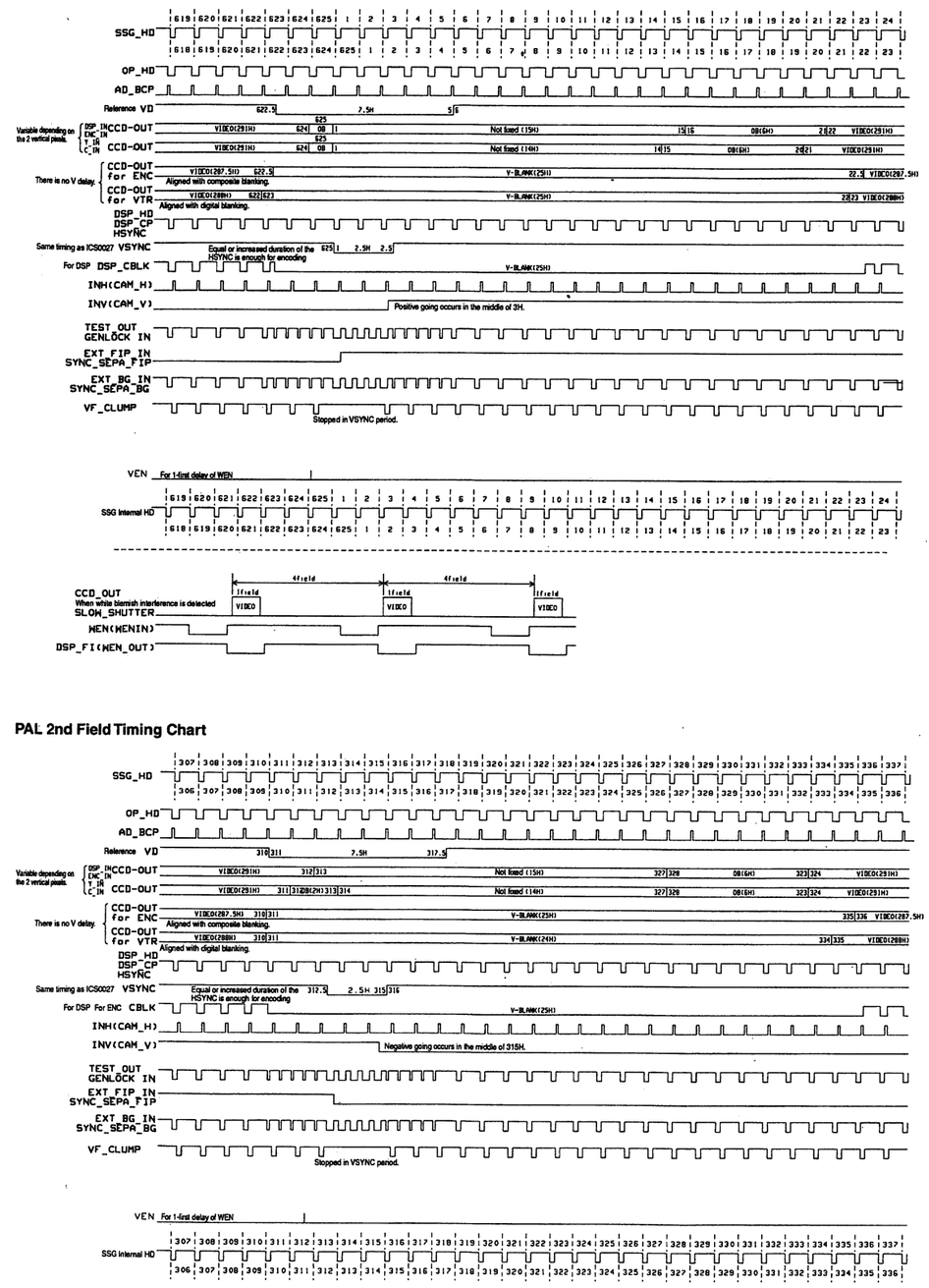

PAL 2nd Field Timing Chart

4-88

SECTION 5
EXPLODED VIEW AND PARTS LIST

● **SAFETY PRECATION**

Parts identified by the ⚠ symbol are critical for safety.
Replace only with specified parts numbers.

● **NOTE**

Parts not denoted by parts numbers are not supplied by JVC.

■ CAMERA HEAD ASSEMBLY PARTS LIST M1

M1MM□□□□

Symbol No.	Part No.	Part Name	Description
1	SC10234-001	FRONT FRAME	
2	SC44847-050	SHIELD TUBE	
3	SC42550-011	C.H.HOLDER	
4	SC32296-001	FILTER KNOB	
5	SC46517-001	GEAR HOLDER	
6	SC32291-001	TG.BRACKET(1)	
7	SC32292-001	TG.BRACKET(2)	
8	SC44974-009	STUD	
9	SC46518-001	VR KNOB	
10	SC46422-001	CUSHION	
11	SC44828-011	KNOB	
12	SC43825-002	LENS CAP	
13	SCV2803-2008B	FFC	IS TO TG
14	SC32308-001	FILTER BASE	
15	SC46524-001	F.SHAFT	
16	SC46523-001	F.I.GEAR	
17	SC44491-001	F.I.SHAFT	
18	SC31301-001	FILTER WHEEL	
19	SC43840-001	ACTIVE FILTER	CLEAR (3200K)
20	SC43841-001	ACTIVE FILTER	OREANGE (5600K)
21	SC43842-004	ACTIVE FILTER	BROWN (5600K+1/64ND)
22	SC44488-001	F.SHEET	
23	SC45539-002	F.W.SHAFT	
24	SC44482-002	F.STOPPER	
25	SC44511-002	F.SPRING	
26	SC32309-001	FILTER COVER	
27	SC44676-005	F.CAP ASSEMBLY	
28	SC84529-001	FL BOARD	
29	QGA1501C1-05	CONNECTOR	5PIN
30	SC46536-001	VR SHAFT	
⚠ 31	SCV2337-1012BD	FFC	IF TO SWF CN35
⚠ 32	SCV2803-2405B	FFC	TG TO CAM1 CN14
⚠ 33	SCV2803-5016B	FFC	PGS30553A CN21
⚠ 34	SCV2803-3012B	FFC	CAM1 TO IF CN23
⚠ 40	SCM1049-P0A	OPTICAL ASSEMBLY	(E)
⚠ 40	SCM1049-N0A	OPTICAL ASSEMBLY	(U)
40A	SC31305-003	MOUNT RING	
40B	SC40779-003	MOUNT SCREW	
40C	SC43855-001	LEVER	
40D	QYSSSP2604M	SCREW	M2.6 x 4
40E	SC46381-002	CUSHION	
41	SC45432-008	CUSHION	
42	QQR1078-001	FERRITE CORE	
S1	QYSDSP3006M	SCREW	M3 x 6
S2	QYSDSF2006M	SCREW	M2 x 6
S3	QYYASPR3004M	SCREW	M3 x 4
S4	QYSDSP2605M	SCREW	M2.6 x 5
S5	QYSPSPT2025M	SCREW	M2 x 2.5
S6	QYSSSPT2040M	SCREW	M2 x 4.0
S7	SC43397-009	SCREW	
S8	QYSPSPT2050M	SCREW	M2 x 5.0
S9	QYSPSPT2040M	SCREW	M2 x 4.0
S10	QYSPSPT1730M	SCREW	M1.7 x 3.0

5.1 CAMERA HEAD ASSEMBLY M1

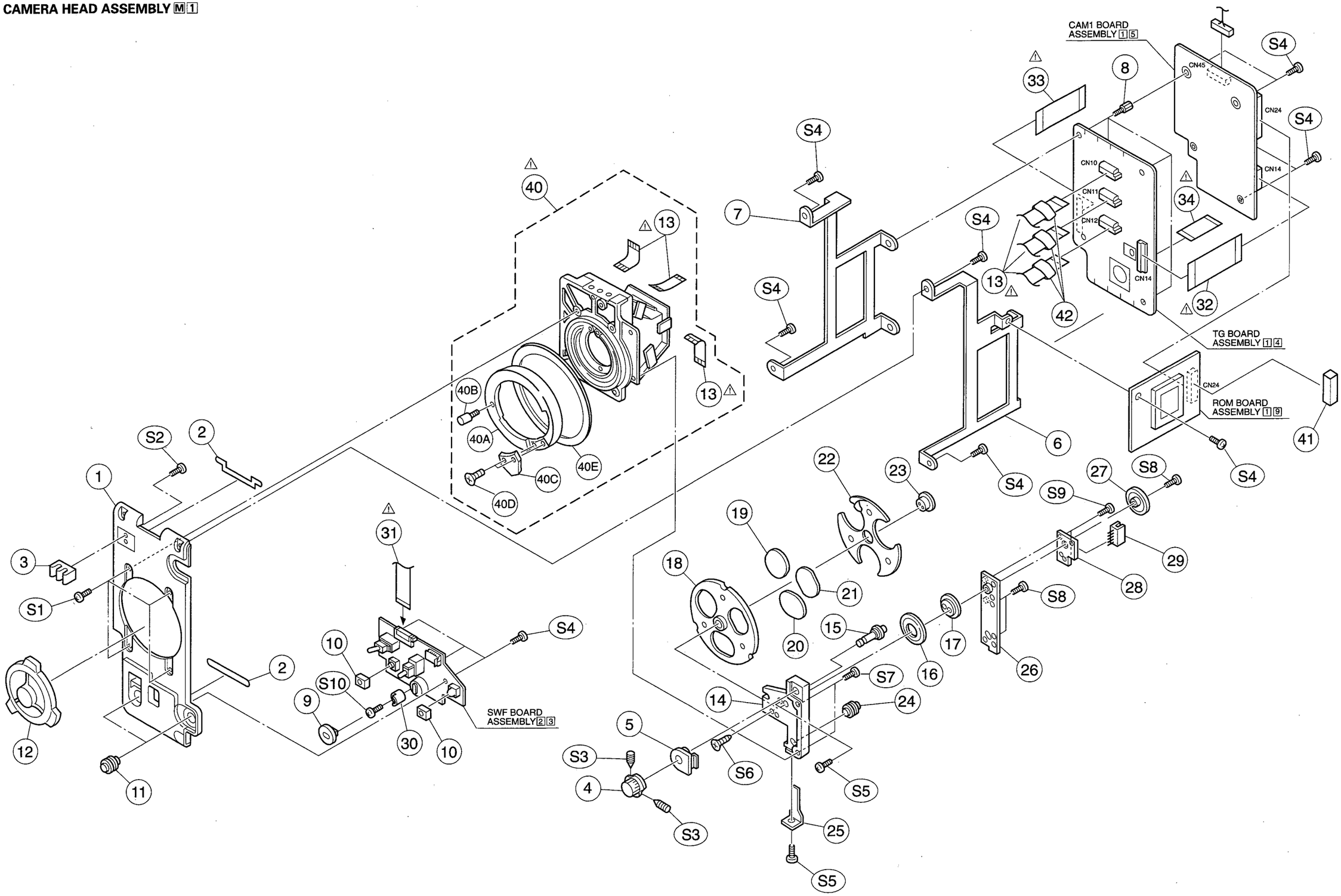

5.2 CABINET ASSEMBLY M2

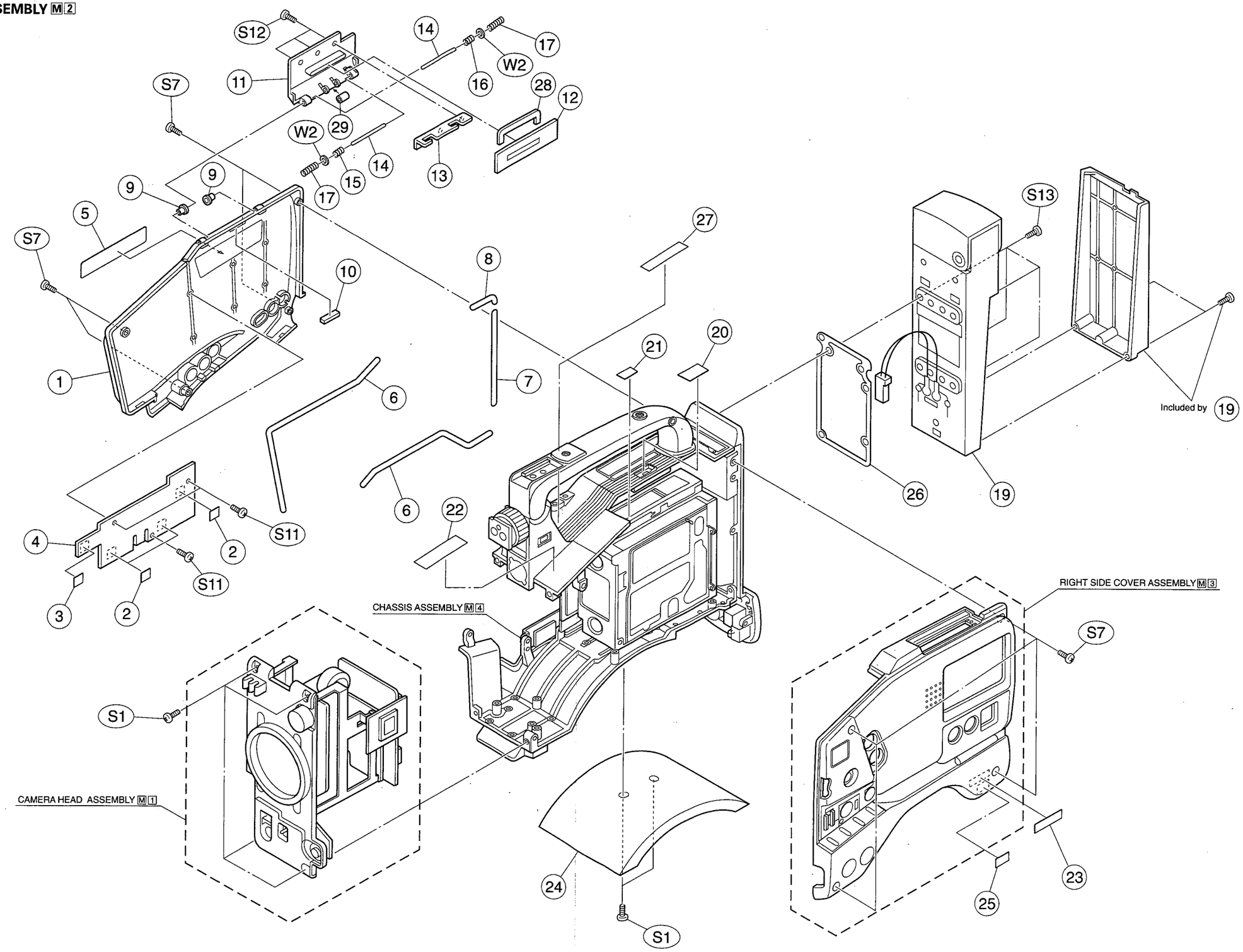

■ CABINET ASSEMBLY PARTS LIST M2

M2MM□□□□

Symbol No.	Part No.	Part Name	Description
1	SC10239-021	L.SIDE COVER	
2	SC46265-004	RUBBER SHEET	
3	SC46265-009	RUBBER SHEET	
4	SC32326-001	HEAT SINK	
5	SC32285-001	ESCUT.PLATE	
6	SC46410-210	GASKET	
7	SC46410-115	GASKET	
8	SC46410-035	GASKET	
9	SC46549-001	BUSHING	
10	SC46555-001	CUSHION	
11	SC20723-002	CASSETTE COVER	
12	SC46541-001	COVER PAD	
13	SC46542-001	LOCK BRACKET	
14	SC46543-001	HINGE SHAFT	
15	SC46540-011	TORSION SPRING	
16	SC46540-012	TORSION SPRING	
17	SC46546-001	C.SPRING	
19	SCV2978-001	BATTERY HOLDER	
20	SC32311-301	NAME PLATE	
21	SC45925-001	LABEL	(E)
22	PU54392-1	LABEL	(E)
23	SC43658-001	CAUTION LABEL	(U)
24	SC10241-001	SHOLDER PAD	
25	OZL1001-012	UL LABEL	(U)
26	SC46521-001	BH CUSHION	
27	SC46608-021	LABEL	
28	SC46590-001	COVER PAD (B)	
29	SC46593-001	COLLAR	
S1	QYSDSP3006M	SCREW	M3 x 6
S7	SC43397-009	SCREW	
S11	QYSPSPT2630M	SCREW	M2.6 x 3.0
S12	QYSPSPT2030M	SCREW	M2 x 3.0
S13	QYSDSP3008M	SCREW	M3 x 8
W2	QYREE1200X	E.RING	

■ RIGHT SIDE COVER ASSEMBLY PARTS LIST M3

M3MM□□□□

Symbol No.	Part No.	Part Name	Description
1	SC10238-001	R.SIDE COVER	
2	SC10242-001	CHEEK PAD	
3	SC46410-290	GASKET	
4	SC46410-190	GASKET	
5	SC46410-130	GASKET	
6	SC46410-115	GASKET	
7	SC46410-035	GASKET	
8	SC44974-010	STUD	
9	SCV2903-001	SPEAKER	
10	SC46228-001	SHEET	
11	SC44537-001	SP.BRACKET	
12	SC45246-001	KNOB	
13	SC44556-011	TC.KNOB	
14	SC46397-001	PLATE	
15	SC44828-002	SWITCH CAP	
16	SC43451-001	LED LENS	
17	SC46503-002	LABEL	
18	SC32287-001	SW.NAME PLATE	
19	SC46547-001	BRACKET	
21	SC20722-001	PANEL COVER	
22	SC46539-001	RUBBER MAGNET	
23	SC46538-001	PANEL WINDOW	
24	SC46548-001	BATTERY COVER	
25	SC46231-002	PANEL SHAFT	
26	SC46579-001	SHAFT HOLDER	
27	SC46509-001	PANEL KNOB	
28	SC32288-001	AUDIO PANEL	
29	SC46536-001	KNOB SHAFT	
30	SC32289-001	VOLUME KNOB	
31	SC45245-011	SLIDE KNOB	
32	PRD42909-04	PLATE	
33	SC46510-001	PLATE(LCD)	
34	SC46511-001	LCD CUSHION	
35	PRD43835	KNOB(OPE)	
36	SC46508-001	SELECT KNOB	
37	SC46357-001	CUSHION	
38	SC32305-002	OPE.COVER(U)	
39	SC32306-002	OPE.COVER(B)	
40	SC46527-001	OPERATION PANEL	
41	SC32307-001	OPERATION KNOB	
42	SC46528-001	OPE.SHAFT	
44	SC46532-001	SPRING(1)	
⚠ 45	SCV2337-1005BD	FFC	SWRU TO SWRM
⚠ 46	SCV2803-1515B	FFC	SWRU TO IF
47	SC46545-001	BOARD HOLDER	
⚠ 48	SCV2803-4012B	FFC	AUD/LCD TO MOTH
⚠ 49	SCV2803-3012B	FFC	AUD/LCD TO MOTH
50	SC46537-001	VR.KNOB	
51	SC46584-001	STAY	
52	SC46584-002	STAY	
⚠ 53	SCV2803-4012B	FFC	S/V CN101 TO MO
⚠ 54	SCV2803-4012B	FFC	S/V CN401 TO MO
⚠ 55	SCV2337-0808BD	FFC	OPE TO AUD/LCD
⚠ 56	SCV2803-2008B	FFC	AU/LC TO SY/VI
57	SC46585-001	LABEL	
58	SC46610-001	SHEET	
S10	QYSPSPT1730M	SCREW	M1.7 x 3.0
S13	QYSDSF2606Z	SCREW	M2.6 x 6
S14	QYSDSP2606Z	SCREW	M2.6 x 6
S15	QYSDSP2604Z	SCREW	M2.6 x 4
S16	QYSDSP2604M	SCREW	M2.6 x 4
S17	QYSDSF2004M	SCREW	M2 x 4
S40	QYSPSPT2080M	SCREW	M2 x 5.0
W1	QYWWS629205Z	WASHER	
W2	QYREE1200X	E.RING	

5.3 RIGHT SIDE COVER ASSEMBLY M3

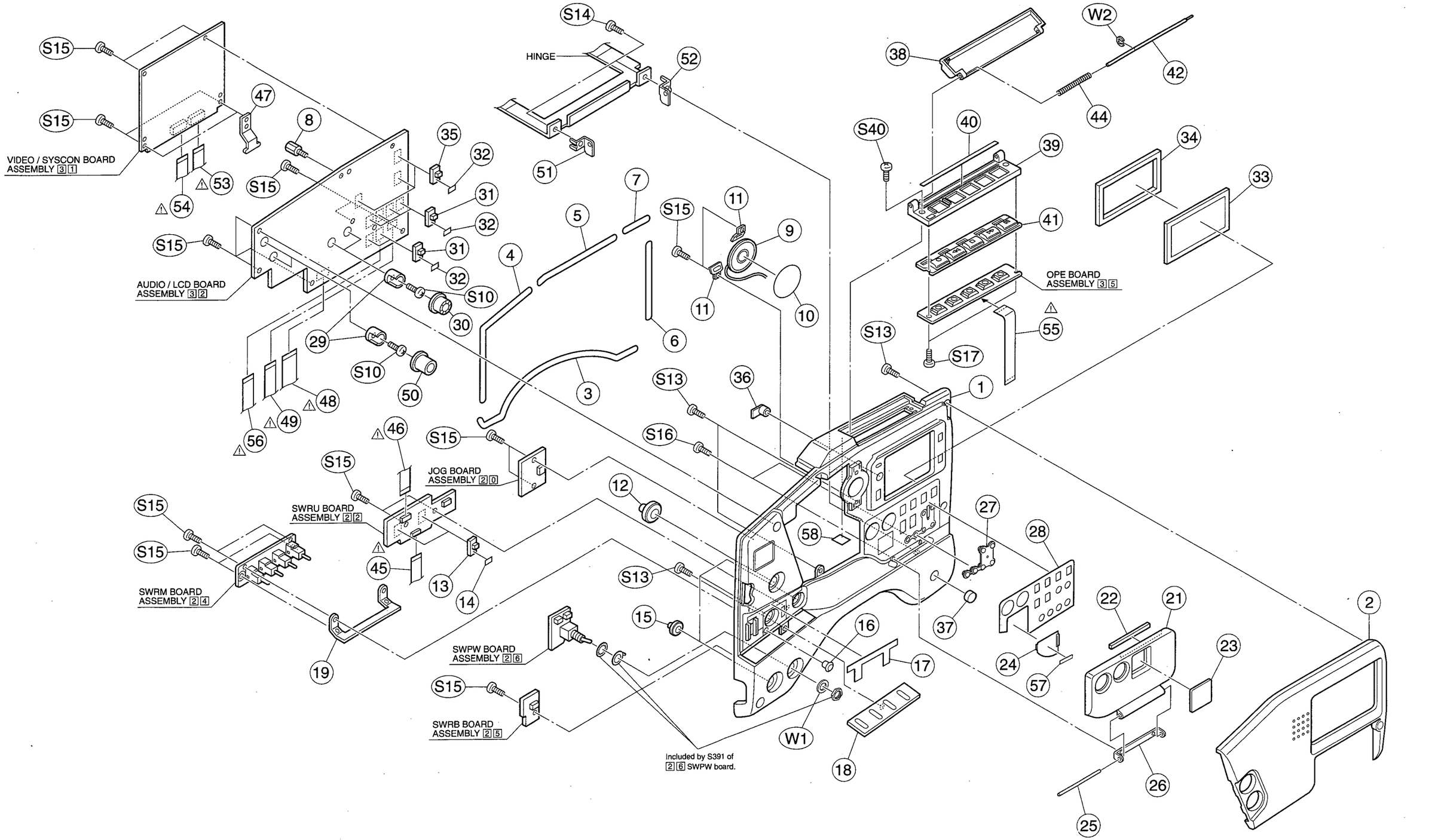

5.4 CHASSIS ASSEMBLY M 4

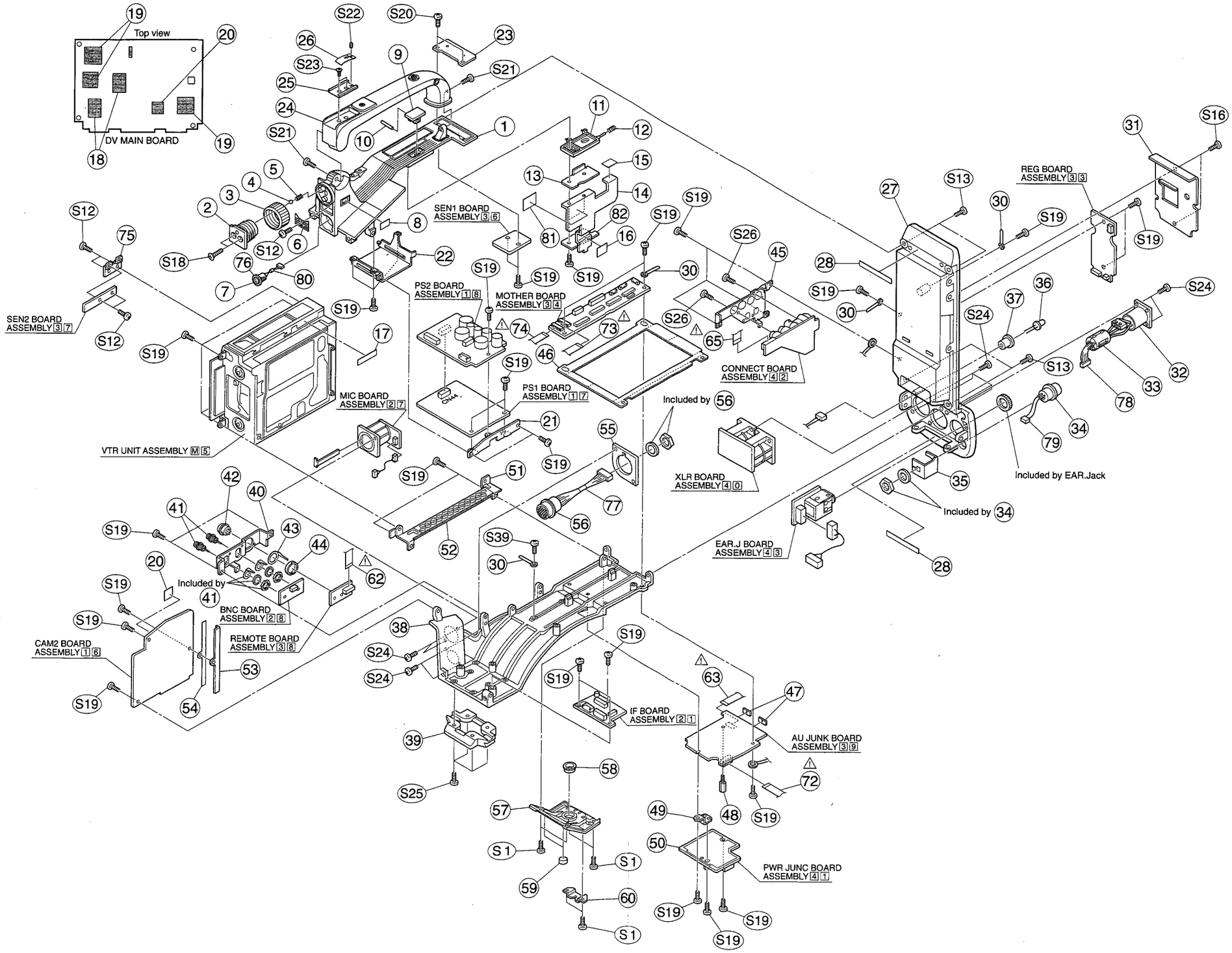

■ CHASSIS ASSEMBLY PARTS LIST M4

M4MM□□□□

Symbol No.	Part No.	Part Name	Description
1	SC10236-001	TOP FRAME	
2	SC31861-001-K	VF BASE	
3	SC45127-002	VF RING	
4	SC40465-045	STEEL BALL	
5	SC45107-001	SPRING	
6	SC46531-001	PLATE	
7	SCV0238-06S	CONNECTOR	
8	SC46544-001	PLATE	
9	SC46529-001	EJECT KNOB	
10	QYPRE1408	SPRING PIN	
11	SC32312-001	SLIDE PLATE	
12	SC46533-001	SPRING(2)	
13	SC46525-001	SLIDE COVER	
14	SC32327-001	HEAT SINK	
15	SC46265-007	RUBBER SHEET	
16	SC46265-005	RUBBER SHEET	
17	SC46592-001	AL SHEET	
18	SC46265-006	RUBBER SHEET	
19	SC46265-007	RUBBER SHEET	
20	SC46265-008	RUBBER SHEET	
21	SC46526-001	PS BRACKET	
22	SC32304-001	RAIL BRACKET	
23	SC32303-001	REAR COVER	
24	SC10240-002	HANDLE ASSEMBLY	
25	SC40886-001	SHOE	
26	SC40936	SPRING	
27	SC10237-001	REAR FRAME	
28	SC44847-050	SHIELD TUBE	
30	PU49485-4	WIRE CLAMP	
31	SC46513-001	REAR PLATE	
32	QNZ0429-001	CONNECTOR	
33	QQR0490-001	FILTER	
34	QNZ0257-001	CONNECTOR(4S)	
35	SC46566-001	CN SHEET	
36	SLR-56VR5F	L.E.D.	
37	SM3512	L.E.D.MOUNT	
38	SC10235-001	BOTTOM FRAME	
39	SC20691-001	FRONT BASE	
40	SC32294-001	CN BRACKET(1)	
41	QNZ0187-001	BNC CONNECTOR	
42	QNZ0276-001	CONNECTOR	
43	SC45831-001	LUG	
44	SC45586-001	NUT	
45	SC32295-002	CN BRACKET(2)	
46	SC32290-002	HINGE	
47	SC46522-001	SHEET	
48	SC44974-007	STUD	
49	SC46552-001	JUNC BRACKET	
50	SC46556-001	JUNC SHEET	
51	SC32293-001	VTR BRACKET	
52	SC46074-005	BRACKET SHEET	
53	SC46553-001	CAM2 BRACKET	
54	SC46567-001	CAM2 SHEET	
55	SC46554-001	LENS BRACKET	
56	SCV1938-12S	LENS CONNECTOR	
57	SC10244-001	BOTTOM COVER	
58	SC46519-001	KNOB	BRAKER
59	SC46520-001	CAP	
60	SC46242-002	REAR BASE	
⚠ 62	SCV2337-0610BD	FFC	REMOTE TO MOTH

Symbol No.	Part No.	Part Name	Description
⚠ 63	SCV2337-1005BD	FFC	XLR TO AU.JUNK
⚠ 65	SCV2337-1612BD	FFC	CONNECTOR TO MO
⚠ 72	SCV2803-2008B	FFC	AU.JUNK TO MOTH
⚠ 73	SCV2803-3318B	FFC	PGS30551A-01
⚠ 74	SCV2803-3030B	FFC	PGS30552A-02
75	SC46551-001	SENSOR BRACKET	
76	MLSC0710	VF WIRE	
77	MLSC0709	LENS WIRE	
78	MLSL149A	DC INPUT WIRE	
79	MLSL148A	DC OUT WIRE	
80	SCV2728-001	FERRITE CORE	
81	–	LABEL	S.S.F.
82	SC46589-001	SHEET	
S1	QYSDSP3006M	SCREW	M3 x 6
S12	QYSPSPT2030M	SCREW	M2 x 3.0
S13	QYSDSP3008M	SCREW	M3 x 8
S15	QYSDSP2604Z	SCREW	M2.6 x 4
S16	QYSDSP2604M	SCREW	M2.6 x 5
S18	QYYYSP4025M	BOLT	
S19	QYSDSP2605Z	SCREW	M2.6 x 5
S20	QYSPSP3006M	SCREW	M3 x 6
S21	QYSPSP5012M	SCREW	M5 x 12
S22	SC44821-001	SCREW	
S23	QYSSSP3006N	SCREW	M3 x 6
S24	QYSPSP2606N	SCREW	M2.6 x 6
S25	QYSSSP4006N	SCREW	M4 x 6
S26	QYSDSF3006M	SCREW	M3 x 6
S39	QYSDST3005Z	SCREW	M3 x 5

■ VTR UNIT ASSEMBLY PARTS LIST M5

M5MM□□□□

Symbol No.	Part No.	Part Name	Description
1	PRD31397	SHIELD CASE(P/R)	
2	PRD31398	SHIELD CASE(DC)	
3	PRD45263	INSULATOR	
4	PRD45247	EARTH PLATE	
5	PRD45259	P.W.B.BRACKET	
⚠ 6	SCV2803-1810B	FFC WIRE	MAIN401-JUNC
⚠ 7	SCV2803-2003B	FFC WIRE	MAIN 402-PR606
⚠ 8	SCV2803-2003B	FFC WIRE	MAIN 501-PR901
⚠ 9	SCV2803-1003B	FFC WIRE	MAIN 108-PR608
10	PU49485-3	WIRE CLAMP	
11	–	LABEL	IEEE1394 ID
12	PRD31393	SIDE COVER(L)	
13	PGZ02634	DAMPER	
14	PRD31394	SIDE COVER(R)	
15	PRD31395	FRONT COVER	
16	PRD31409	CASSETTE SLOT	
17	PRD31396	REAR COVER	
18	PRD45262	INSULATOR	
19	PRD20680	BASE FRAME	
20	PRD30030-127	PAD	
21	PRD31390-01-01	FRONT FRAME	
22	PRD31391	C.H.DOOR	
23	LP40360-001A	TORSION SPRING	
25	PRD31399A	CLEANER BKT.ASSEMBLY	
26	PRD30024-107	TENSION SPRING	
27	PRD31401	DRIVE ARM	
28	PRD31402A-01	CLEANER ARM ASSEMBLY	
29	LY41249-001A	CLEANER ASSEMBLY	
30	PRD30024-107	TENSION SPRING	
31	PGZ02629	DC-SOLENOID	

Symbol No.	Part No.	Part Name	Description
32	PRD30023-65	COMPRESS SPRING	
33	PRD31392	REAR FRAME	
34	QSD0002-001	DEW SENSOR	
35	PRD45284	BRACKET(C.H.)	
S16	QYSDSP2604Z	SCREW	M2.6 x 4
S30	PRD44099	SCREW	
S31	QYSDSP2003Z	SCREW	M2 x 3
S32	QYSDSP2005Z	SCREW	M2 x 5
S33	PRD45246	SCREW	
S34	QYSPSP2003Z	SCREW	M2 x 3
S35	QYSDSP2006Z	SCREW	M2 x 6
S41	QYSDSF2005Z	SCREW	M2 x 5
W3	YQ44246-3	SLIT WASHER	
W4	PQM30017-27	SLIT WASHER	

5.5 VTR UNIT ASSEMBLY M5

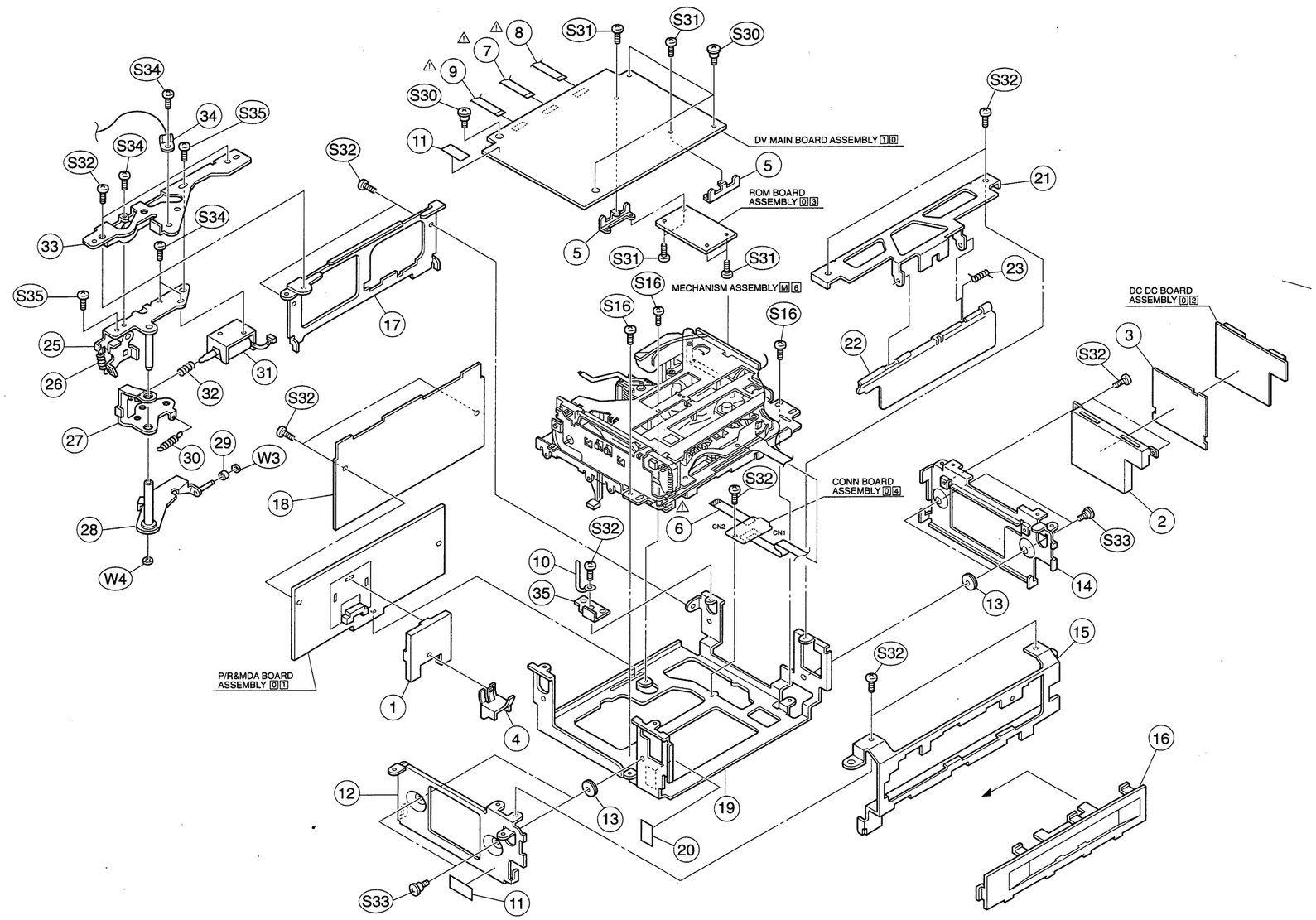

5.6 MECHANISM ASSEMBLY M 6

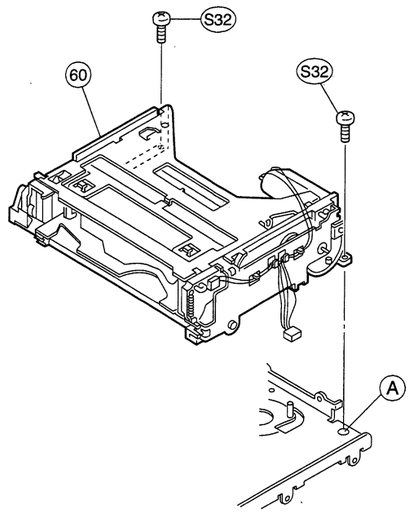

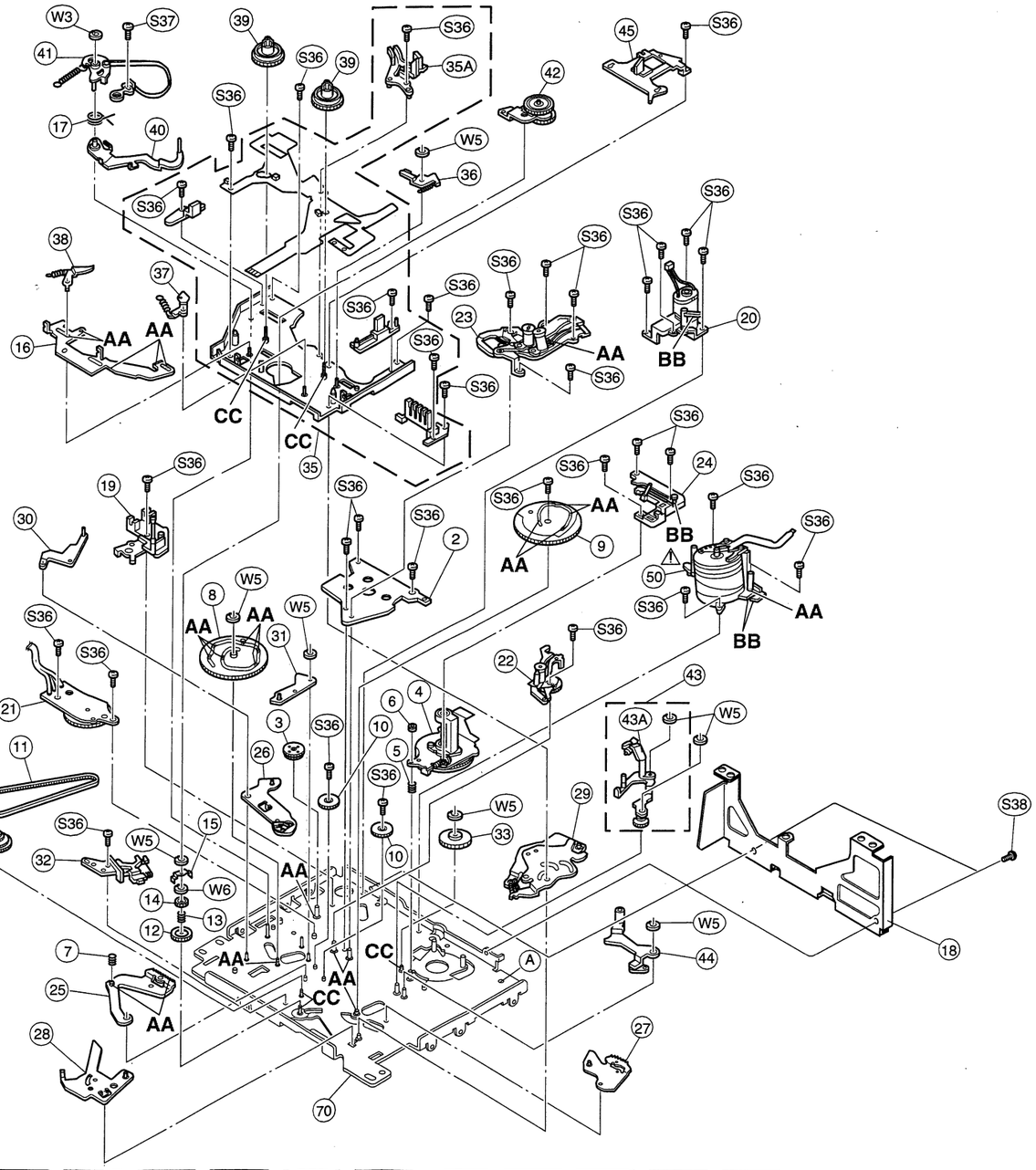

No. 50

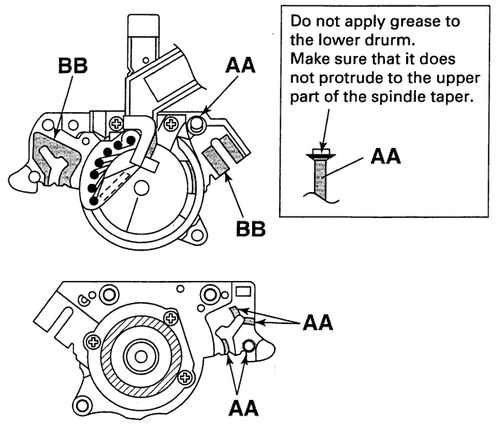

Do not apply grease to the lower drurm. Make sure that it does not protrude to the upper part of the spindle taper.

No. 8

No. 9

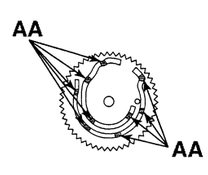

Classification	Part No.	Symbol in drawing
Grease	KYODO-SH-P	**AA**
Grease	RX-410R	**BB**
Oil	YTU94027	**CC**

NOTES:
- This section indicates that the grease and oil are to be applied on locations marked with **AA**, **BB** and **CC**.
  During checking and servicing, check if grease has been applied on the locations marked with **AA**, **BB** and oil on the locations marked with **CC**.
- Apply also grease and oil on some locations in the main cam gear and the cam groove at the rear side of the sub cam gear.

5-12

■ MECHANISM ASSEMBLY PARTS LIST M6

M6MM□□□□

Symbol No.	Part No.	Part Name	Description
1	YMA0026A	MECHA ASSEMBLY	
2	LY30358-001A	DRUM BASE DECK	
3	LY30343-001A	WORM WHEEL 2	
4	QAR0012-002	CAPSTAN MOTOR	
5	LY30002-003A	COMPRES.SPRING	
6	LY41390-001A	ADJUST NUT	
7	LY40224-001A	COLLAR	
8	LY10060-002A	MAIN CAM	
9	LY20102-001A	SUB CAM	
10	YQ44560-1-2	CONNECT GEAR 2	
11	LY40241-001A	TIMING BELT	
12	LY40246-001A	C.LOCK GEAR(1)	
13	LY30002-009A	COMPRES.SPRING	
14	LY40247-001A	C.LOCK GEAR(2)	
15	LY40248-001A	PUSH PLATE	
16	LY20109-001B	CONTROL PLATE	
17	LY41243-001A	TOR.SPRING	
18	PRD31418	A.H.C.FRAME	
19	LY40237-001C	ENT.G.BASE ASSEMBLY	
20	LY30340-003A	MOTOR BKT.ASSEMBLY	
21	LY41190-002A	ROTARY EN.ASSEMBLY	
22	YQ31873C	G.RAIL(S) ASSEMBLY	
23	LY20097-001B	G.RAIL(T) ASSEMBLY	
24	LY30345-001A	M.CATCHER ASSEMBLY	
25	LY40223-001A	ARM GEAR 1 ASSEMBLY	
26	LY40235-002B	CENT.ARM ASSEMBLY	
27	LY40279-001A	ARM GEAR 2 ASSEMBLY	
28	LY40228-001A	C.LOCK LEVER ASSEMBLY	
29	LY30347-001A	CHARGE ARM ASSEMBLY	
30	LY40236-001A	T.CTL.ARM ASSEMBLY	
31	LY40233-001A	B.CTL.ARM ASSEMBLY	
32	LY40242-001C	BASE PLATE ASSEMBLY	
33	YQ43931A	R.D.PULLEY ASSEMBLY	
34	LY40239-003A	CENT.GEAR ASSEMBLY	
35	LYH30012-001A	S.DECK ASSEMBLY(G)	
35A	LY20108-001B	LED PRISM	
36	LY40257-001A	SUB BRAKE ASSEMBLY	
37	LY40259-001A	M.BRAKE(T) ASSEMBLY	
38	LY40260-003A	M.BRAKE(S) ASSEMBLY	
39	LY40255-001A	REEL DISK ASSEMBLY	
40	LY41245-001B	TENSION ARM SA.	
41	LY41246-003B	B.ARM PLATE SA.	
42	LY30370-002A	SWING ARM ASSEMBLY	
43	LY30380-001D	EXIT G.ARM ASSEMBLY	
43A	LY41250-001A	CLEAN.ARM ASSEMBLY	
44	LY30374-001B	P.R.ARM ASSEMBLY	
45	LY40280-003A	REEL COVER ASSEMBLY	
⚠ 50	YDV2093A	DRUM ASSEMBLY	
60	LY30428-003C	C.HOUSING ASSEMBLY	
70	LY10062-001B	MAIN DECK ASSEMBLY	
S32	QYSDSP2005Z	SCREW	M2 x 5
S36	YQ43893	SCREW	M1.4 x 2
S37	YQ43893-7	SCREW	M1.4 x 2
S38	QYSDSP2002N	SCREW	M2 x 2
W3	YQ44246-3	SLIT WASHER	
W5	YQ44246	SLIT WASHER	
W6	YQ43933-2	WASHER	

SECTION 6
ELECTRICAL PARTS LIST

SAFETY PRECAUTION:
Parts identified by the ⚠ symbol are critical for safety. Replace only with specified parts numbers.
For maximum reliability and performance, all other replacement parts should be identical to those specified.

NOTE:
- Parts not denoted by parts numbers are not supplied by JVC.
- Abbreviations in this list are as follows:

RESISTORS
In the "Description" column:
All resistance values are in ohms ( ).
k expresses kilo-ohm (1 000 ohms, k).
M expresses mega-ohm (10^6 ohms, M).

In the "Parts Name"column:
CAR.RESISTOR : Carbon Resistor
C.M.F.RESISTOR : Constant Metalized Film Resistor
COMP.RESISTOR: Composition Resistor
FUSI.RESISTOR : Fusible Resistor
M.F.RESISTOR : Metal Film Resistor
M.G.RESISTOR : Metal Graze Resistor
M.P.RESISTOR : Metal Plate Resistor
O.M.F.RESISTOR : Oxide Metalized Film Resistor
TRIM.RESISTOR : Trimerer Resistor
U.F.RESISTOR : Non-inflammable Resistor
VAL.RESISTOR : Valiable Resistor
W.W.RESISTOR : Wire Wound Resistor

CAPACITORS
In the "Description" column:
All capacitance values are in microfarad (μF) unless otherwise indicated.
p expresses picofarad (10^{-12} farad,pF).

In the "Parts Name" column:
CER.CAPACITOR : Ceramic Capacitor
E.CAPACITOR : Electrolytic Capacitor
FILM CAPACITOR : Film Capacitor
M.F.CAPACITOR : Metalized Film Capacitor
MICA CAPACITOR : Mica Capacitor
MPP CAPACITOR : Metalized PolyPropylene Capacitor
MPPS CAPACITOR : Metalized PolyPhenylene Sulfied film Capacitor
M.M.CAPACITOR : Metalized Mylar Capacitor
MYLAR CAPACITOR : Mylar Capacitor
N.P.CAPACITOR : Non-Poler electrolytic Capacitor
P.P.CAPACITOR : PolyPropylene Capacitor
PPS CAPACITOR : PolyPhenylene Sulfied film Capacitor
P.S.CAPACITOR : PolyStyrene Capacitor
TAN.CAPACITOR : Tantal Capacitor
TRIM.CAPACITOR : Trimer Capacitor
VAL.CAPACITOR : Valiable Capacitor

Note: In the "Description" column of the parts list, (U) means the parts for the U version while (E) is for the E version.

Symbol No.	Part No.	Part Name	Description		
IC1	SCV1585-064	I.C.(M)	JVC	(U)	← for U version
	SCV1585-067	I.C.(M)	JVC	(E)	← for E version

6.1 PR & MDA BOARD ASSEMBLY PARTS LIST [0][1]

SLK2088-01-00B [0][1]□□□□□□□

Symbol No.	Part No.	Part Name	Description	
IC601	BA6865KV	I.C.(M)	ROHM	
IC602	BA6417F-X	I.C.(M)	ROHM	
IC603	BA6254FS-X	I.C.(M)	ROHM	
IC901	AN3731FHQ	I.C.(M)	MATSUSHITA	
Q601	DTC144EUA-X	TRANSISTOR	ROHM	
Q602	2SB1302/ST/-X	TRANSISTOR	SANYO	
Q603	2SB1302/ST/-X	TRANSISTOR	SANYO	
Q604	2SB1302/ST/-X	TRANSISTOR	SANYO	
Q607	DTC144EUA-X	TRANSISTOR	ROHM	
Q608	2SB1302/ST/-X	TRANSISTOR	SANYO	
Q903	2SC4226/3-5/-X	TRANSISTOR	NEC	
Q905	2SD1979/S/-X	TRANSISTOR	MATSUSHITA	
Q906	2SD1979/S/-X	TRANSISTOR	MATSUSHITA	
Q907	2SC4226/3-5/-X	TRANSISTOR	NEC	
D602	DAP202U-X	DIODE	ROHM	
D603	DAP202U-X	DIODE	ROHM	
D605	MA736-X	DIODE	MATSUSHITA	
R601	NRSA63J-681X	M.G.RESISTOR	680	1/16W
R602	NRSA63J-124X	M.G.RESISTOR	120k	1/16W
R603	NRSA63J-472X	M.G.RESISTOR	4.7k	1/16W
R604	NRSA63J-104X	M.G.RESISTOR	100k	1/16W
R605	NRSA63J-223X	M.G.RESISTOR	22k	1/16W
R606	NRV142F-R22X	C.M.F.RESISTOR	0.22	1/4W
R608	NRS12BJ-1R0W	M.G.RESISTOR	1	1/2W
R609	NRS12BJ-1R0W	M.G.RESISTOR	1	1/2W
R610	NRSA63J-102X	M.G.RESISTOR	1k	1/16W
R611	NRSA63J-102X	M.G.RESISTOR	1k	1/16W
R612	NRSA63J-274X	M.G.RESISTOR	270k	1/16W
R613	NRSA63J-272X	M.G.RESISTOR	2.7k	1/16W
R614	NRSA63J-154X	M.G.RESISTOR	150k	1/16W
R615	NRSA63J-474X	M.G.RESISTOR	470k	1/16W
R616	NRVA63D-202X	C.M.F.RESISTOR	2k	1/16W
R617	NRSA63J-563X	M.G.RESISTOR	56k	1/16W
R618	NRSA63J-203X	M.G.RESISTOR	20k	1/16W
R619	NRSA63J-393X	M.G.RESISTOR	39k	1/16W
R625	NRSA63J-511X	M.G.RESISTOR	510	1/16W
R626	NRSA63J-511X	M.G.RESISTOR	510	1/16W
R627	NRSA63J-511X	M.G.RESISTOR	510	1/16W
R628	NRSA63J-511X	M.G.RESISTOR	510	1/16W
R629	NRSA63J-105X	M.G.RESISTOR	1M	1/16W
R630	NRSA63J-0R0X	M.G.RESISTOR	0	1/16W
R631	NRSA63J-0R0X	M.G.RESISTOR	0	1/16W
R634	NRSA63J-0R0X	M.G.RESISTOR	0	1/16W
R635	NRSA63J-103X	M.G.RESISTOR	10k	1/16W
R636	NRSA63J-473X	M.G.RESISTOR	47k	1/16W
R642	NRSA63J-0R0X	M.G.RESISTOR	0	1/16W
R643	NRSA63J-103X	M.G.RESISTOR	10k	1/16W
R646	NRSA63J-393X	M.G.RESISTOR	39k	1/16W
R649	NRSA63J-0R0X	M.G.RESISTOR	0	1/16W
R650	NRSA63J-0R0X	M.G.RESISTOR	0	1/16W
R652	NRSA63J-0R0X	M.G.RESISTOR	0	1/16W
R657	NRSA63J-152X	M.G.RESISTOR	1.5k	1/16W
R658	NRSA63J-472X	M.G.RESISTOR	4.7k	1/16W
R661	NRSA63J-0R0X	M.G.RESISTOR	0	1/16W
R662	NRSA63J-0R0X	M.G.RESISTOR	0	1/16W
R663	NRSA63J-152X	M.G.RESISTOR	1.5k	1/16W
R903	NRSA63J-0R0X	M.G.RESISTOR	0	1/16W
R904	NRSA63J-103X	M.G.RESISTOR	10k	1/16W
R905	NRSA63J-152X	M.G.RESISTOR	1.5k	1/16W
R906	NRSA63J-122X	M.G.RESISTOR	1.2k	1/16W
R907	NRSA63J-100X	M.G.RESISTOR	10	1/16W
R909	NRSA63J-0R0X	M.G.RESISTOR	0	1/16W
R911	NRSA63J-152X	M.G.RESISTOR	1.5k	1/16W
R912	NRSA63J-123X	M.G.RESISTOR	12k	1/16W
R913	NRSA63J-680X	M.G.RESISTOR	68	1/16W
R914	NRSA63J-471X	M.G.RESISTOR	470	1/16W
R915	NRSA63J-103X	M.G.RESISTOR	10k	1/16W
R916	NRSA63J-271X	M.G.RESISTOR	270	1/16W
R917	NRSA63J-102X	M.G.RESISTOR	1k	1/16W

Symbol No.	Part No.	Part Name	Description	
R921	NRSA63J-102X	M.G.RESISTOR	1k	1/16W
R922	NRSA63J-221X	M.G.RESISTOR	220	1/16W
R923	NRSA63J-221X	M.G.RESISTOR	220	1/16W
R924	NRSA63J-102X	M.G.RESISTOR	1k	1/16W
R925	NRSA63J-680X	M.G.RESISTOR	68	1/16W
R926	NRSA63J-123X	M.G.RESISTOR	12k	1/16W
R927	NRSA63J-152X	M.G.RESISTOR	1.5k	1/16W
R928	NRSA63J-0R0X	M.G.RESISTOR	0	1/16W
R932	NRSA63J-0R0X	M.G.RESISTOR	0	1/16W
C601	NCB31HK-103X	CER.CAPACITOR	0.01	50V
C602	NCB41CM-106X	CER.CAPACITOR	10	16V
C603	NBE21AM-106X	TAN.CAPACITOR	10	10V
C605	NCB31CK-104X	CER.CAPACITOR	0.1	16V
C606	NCB31HK-152X	CER.CAPACITOR	1500p	50V
C607	NCB31HK-103X	CER.CAPACITOR	0.01	50V
C608	NCB31HK-103X	CER.CAPACITOR	0.01	50V
C609	NCB31HK-103X	CER.CAPACITOR	0.01	50V
C610	NCB31HK-103X	CER.CAPACITOR	0.01	50V
C611	NCB31HK-103X	CER.CAPACITOR	0.01	50V
C612	NCB31HK-103X	CER.CAPACITOR	0.01	50V
C613	NCB31HK-103X	CER.CAPACITOR	0.01	50V
C614	NBE71VM-106X	TAN.CAPACITOR	10	35V
C615	NCB31CK-104X	CER.CAPACITOR	0.1	16V
C616	NCB31CK-104X	CER.CAPACITOR	0.1	16V
C617	NCB31CK-104X	CER.CAPACITOR	0.1	16V
C618	NCB31EK-223X	CER.CAPACITOR	0.022	25V
C619	NCB31EK-223X	CER.CAPACITOR	0.022	25V
C620	NCB31EK-223X	CER.CAPACITOR	0.022	25V
C621	NCB21AK-105X	CER.CAPACITOR	1	10V
C622	NCB31CK-104X	CER.CAPACITOR	0.1	16V
C623	NCB31CK-104X	CER.CAPACITOR	0.1	16V
C625	NCB31CK-104X	CER.CAPACITOR	0.1	16V
C626	NCB31EK-223X	CER.CAPACITOR	0.022	25V
C627	NCB31CK-473X	CER.CAPACITOR	0.047	16V
C628	NCB21EK-104X	CER.CAPACITOR	0.1	25V
C631	NCB31CK-104X	CER.CAPACITOR	0.1	16V
C632	NBE51CM-226X	TAN.CAPACITOR	22	16V
C635	NBE71VM-106X	TAN.CAPACITOR	10	35V
C636	NCB41CM-106X	CER.CAPACITOR	10	16V
C637	NCB41CM-106X	CER.CAPACITOR	10	16V
C639	NCB31HK-103X	CER.CAPACITOR	0.01	50V
C640	NCB31HK-103X	CER.CAPACITOR	0.01	50V
C641	NCB31HK-103X	CER.CAPACITOR	0.01	50V
C644	NCB21EK-104X	CER.CAPACITOR	0.1	25V
C646	NCB31CK-104X	CER.CAPACITOR	0.1	16V
C647	NCB31CK-104X	CER.CAPACITOR	0.1	16V
C648	NCB21CK-224X	CER.CAPACITOR	0.22	16V
C649	NCB21CK-224X	CER.CAPACITOR	0.22	16V
C650	NCB21CK-224X	CER.CAPACITOR	0.22	16V
C651	NCB31HK-103X	CER.CAPACITOR	0.01	50V
C652	NBE71VM-106X	TAN.CAPACITOR	10	35V
C653	NCF31CZ-334X	CER.CAPACITOR	0.33	16V
C654	NCF31CZ-334X	CER.CAPACITOR	0.33	16V
C901	NCB31HK-122X	CER.CAPACITOR	1200p	50V
C902	NCB21AK-105X	CER.CAPACITOR	1	10V
C903	NCB31HK-102X	CER.CAPACITOR	1000p	50V
C904	NCB31HK-103X	CER.CAPACITOR	0.01	50V
C905	NCB31HK-103X	CER.CAPACITOR	0.01	50V
C906	NDC31HJ-470X	CER.CAPACITOR	47p	50V
C907	NCB31HK-681X	CER.CAPACITOR	680p	50V
C909	NCB31HK-152X	CER.CAPACITOR	1500p	50V
C910	NDC31HJ-330X	CER.CAPACITOR	33p	50V
C911	NBE20JM-106X	TAN.CAPACITOR	10	6.3V
C912	NCB31HK-103X	CER.CAPACITOR	0.01	50V
C913	NBE61AM-107X	TAN.CAPACITOR	100	10V
C914	NCB31HK-103X	CER.CAPACITOR	0.01	50V
C915	NCB31HK-103X	CER.CAPACITOR	0.01	50V
C916	NDC31HJ-220X	CER.CAPACITOR	22p	50V
C917	NBE71VM-106X	TAN.CAPACITOR	10	35V
C918	NCB31HK-103X	CER.CAPACITOR	0.01	50V
C919	NCB31HK-103X	CER.CAPACITOR	0.01	50V

[PR & MDA]

Symbol No.	Part No.	Part Name	Description	
C920	NCB31HK-103X	CER.CAPACITOR	0.01	50V
C921	NCB31HK-103X	CER.CAPACITOR	0.01	50V
C922	NCB31HK-103X	CER.CAPACITOR	0.01	50V
C924	NCB31HK-103X	CER.CAPACITOR	0.01	50V
C927	NCB31HK-103X	CER.CAPACITOR	0.01	50V
C929	NRSA63J-0R0X	M.G.RESISTOR	0	1/16W
C930	NBE50JM-107X	TAN.CAPACITOR	100	6.3V
C931	NBE21AM-106X	TAN.CAPACITOR	10	10V
C932	NBE21AM-106X	TAN.CAPACITOR	10	10V
C933	NCB31HK-103X	CER.CAPACITOR	0.01	50V
C934	NDC31HJ-330X	CER.CAPACITOR	33p	50V
C935	NBE20JM-106X	TAN.CAPACITOR	10	6.3V
C936	NCB31HK-103X	CER.CAPACITOR	0.01	50V
C938	NCB31HK-152X	CER.CAPACITOR	1500p	50V
C940	NCB31HK-103X	CER.CAPACITOR	0.01	50V
C943	NCB31HK-103X	CER.CAPACITOR	0.01	50V
L901	NQL044K-470X	COIL	47uH	
L902	NQL044K-221X	COIL	220uH	
L903	NQL044K-470X	COIL	47uH	
L904	NQL085J-220X	COIL	22uH	
L905	NQL085J-220X	COIL	22uH	
LC601	PGZ01972Z	LC FILTER		
LC602	PGZ01972Z	LC FILTER		
LC603	PGZ01972Z	LC FILTER		
LC605	PGZ01972Z	LC FILTER		
CN601	QGA1201F2-08X	CONNECTOR	8PIN	
CN602	QGA1201C2-02X	CONNECTOR	2PIN	
CN603	QGF0508F1-11X	CONNECTOR	11PIN	
CN604	QGF0504C1-18X	CONNECTOR	18PIN	
CN605	QGA1201F2-04X	CONNECTOR	4PIN	
CN606	QGF0508F1-20X	CONNECTOR	20PIN	
CN607	QGA1201C2-04X	CONNECTOR	4PIN	
CN608	QGF0508F1-10X	CONNECTOR	10PIN	
CN609	QGA1201F2-02X	CONNECTOR	2PIN	
CN610	QGA2001F2-02X	CONNECTOR	2PIN	
CN901	QGF0508F1-20X	CONNECTOR	20PIN	
CN902	QGF0504C1-10X	CONNECTOR	10PIN	

6.2 DCDC BOARD ASSEMBLY PARTS LIST [0][2]

SLK2088-02-00A [0][2]□□□□□□

Symbol No.	Part No.	Part Name	Description	
IC1	BA9738KV	I.C.(M)	ROHM	
Q2	DTC144EUA-X	TRANSISTOR	ROHM	
Q3	2SB1302/ST/-X	TRANSISTOR	SANYO	
Q4	2SB1302/ST/-X	TRANSISTOR	SANYO	
Q5	2SB1302/ST/-X	TRANSISTOR	SANYO	
Q6	2SB1302/ST/-X	TRANSISTOR	SANYO	
Q7	2SB1302/ST/-X	TRANSISTOR	SANYO	
Q8	2SB1302/ST/-X	TRANSISTOR	SANYO	
D1	SFPB-72-W	DIODE	SANKEN	
D2	SFPB-72-W	DIODE	SANKEN	
D3	SFPB-72-W	DIODE	SANKEN	
D4	SFPB-72-W	DIODE	SANKEN	
D5	SFPB-72-W	DIODE	SANKEN	
D6	SFPB-72-W	DIODE	SANKEN	
D7	DAN202U-X	DIODE	ROHM	
R1	NRSA63J-103X	M.G.RESISTOR	10k	1/16W
R2	NRSA63J-103X	M.G.RESISTOR	10k	1/16W
R3	NRSA63J-0R0X	M.G.RESISTOR	0	1/16W
R5	NRSA63J-272X	M.G.RESISTOR	2.7k	1/16W
R6	NRSA63J-223X	M.G.RESISTOR	22k	1/16W
R7	NRSA63J-682X	M.G.RESISTOR	6.8k	1/16W
R8	NRSA63J-823X	M.G.RESISTOR	82k	1/16W
R9	NRSA63J-223X	M.G.RESISTOR	22k	1/16W
R10	NRSA63J-102X	M.G.RESISTOR	1k	1/16W
R11	NRSA63J-122X	M.G.RESISTOR	1.2k	1/16W
R14	NRSA63J-122X	M.G.RESISTOR	1.2k	1/16W
R15	NRSA63J-223X	M.G.RESISTOR	22k	1/16W
R16	NRSA63J-682X	M.G.RESISTOR	6.8k	1/16W
R17	NRSA63J-823X	M.G.RESISTOR	82k	1/16W
R18	NRSA63J-123X	M.G.RESISTOR	12k	1/16W
R19	NRSA63J-223X	M.G.RESISTOR	22k	1/16W
R20	NRSA63J-272X	M.G.RESISTOR	2.7k	1/16W
R21	NRSA63D-243X	M.G.RESISTOR	24k	1/16W
R22	NRSA63D-103X	M.G.RESISTOR	10k	1/16W
R23	NRSA63D-153X	M.G.RESISTOR	15k	1/16W
R24	NRSA63D-123X	M.G.RESISTOR	12k	1/16W
R25	NRSA63J-223X	M.G.RESISTOR	22k	1/16W
R26	NRSA63J-0R0X	M.G.RESISTOR	0	1/16W
R27	NRSA63J-473X	M.G.RESISTOR	47k	1/16W
R28	NRSA63D-153X	M.G.RESISTOR	15k	1/16W
R29	NRSA63D-103X	M.G.RESISTOR	10k	1/16W
R30	NRSA63D-273X	M.G.RESISTOR	27k	1/16W
R31	NRSA63D-822X	M.G.RESISTOR	8.2k	1/16W
R32	NRSA63D-103X	M.G.RESISTOR	10k	1/16W
R33	NRSA63D-273X	M.G.RESISTOR	27k	1/16W
R34	NRSA63D-153X	M.G.RESISTOR	15k	1/16W
R35	NRSA63D-103X	M.G.RESISTOR	10k	1/16W
R36	NRSA63D-682X	M.G.RESISTOR	6.8k	1/16W
R37	NRSA63J-472X	M.G.RESISTOR	4.7k	1/16W
R38	NRSA63J-472X	M.G.RESISTOR	4.7k	1/16W
R39	NRSA63J-103X	M.G.RESISTOR	10k	1/16W
R40	NRSA63J-472X	M.G.RESISTOR	4.7k	1/16W
R41	NRSA63J-103X	M.G.RESISTOR	10k	1/16W
R42	NRSA63D-103X	M.G.RESISTOR	10k	1/16W
R43	NRSA63J-102X	M.G.RESISTOR	1k	1/16W
R44	NRSA63J-102X	M.G.RESISTOR	1k	1/16W
R45	NRSA63J-0R0X	M.G.RESISTOR	0	1/16W
R46	NRSA63J-0R0X	M.G.RESISTOR	0	1/16W
R47	NRSA63J-331X	M.G.RESISTOR	330	1/16W
R48	NRSA63J-0R0X	M.G.RESISTOR	0	1/16W
R49	NRSA63J-103X	M.G.RESISTOR	10k	1/16W
R50	NRSA63J-0R0X	M.G.RESISTOR	0	1/16W
R51	NRSA63J-0R0X	M.G.RESISTOR	0	1/16W
R52	NRSA63J-103X	M.G.RESISTOR	10k	1/16W
R53	NRSA63J-103X	M.G.RESISTOR	10k	1/16W
R54	NRSA63J-0R0X	M.G.RESISTOR	0	1/16W
R55	NRSA63J-0R0X	M.G.RESISTOR	0	1/16W
R56	NRSA63J-0R0X	M.G.RESISTOR	0	1/16W
R58	NRSA63J-0R0X	M.G.RESISTOR	0	1/16W

Symbol No.	Part No.	Part Name	Description
C1	NCB21AK-105X	CER.CAPACITOR	1 10V
C2	NCB21AK-105X	CER.CAPACITOR	1 10V
C3	NCB21AK-105X	CER.CAPACITOR	1 10V
C4	NCB31HK-102X	CER.CAPACITOR	1000p 50V
C5	NCB31HK-102X	CER.CAPACITOR	1000p 50V
C6	NCB31HK-102X	CER.CAPACITOR	1000p 50V
C7	NCB31HK-102X	CER.CAPACITOR	1000p 50V
C8	NCB21CK-224X	CER.CAPACITOR	0.22 16V
C9	NCB31CK-104X	CER.CAPACITOR	0.1 16V
C10	NCB11AK-225X	CER.CAPACITOR	2.2 10V
C11	NCB31CK-104X	CER.CAPACITOR	0.1 16V
C12	NCB31CK-104X	CER.CAPACITOR	0.1 16V
C13	NCB31HK-331X	CER.CAPACITOR	330p 50V
C14	NDC31HJ-181X	CER.CAPACITOR	180p 50V
C15	NCB31CK-104X	CER.CAPACITOR	0.1 16V
C16	NCB31CK-473X	CER.CAPACITOR	0.047 16V
C17	NCB31CK-104X	CER.CAPACITOR	0.1 16V
C18	NCB31HK-472X	CER.CAPACITOR	4700p 50V
C19	NCB31HK-103X	CER.CAPACITOR	0.01 50V
C20	NCB31HK-103X	CER.CAPACITOR	0.01 50V
C21	NCB31HK-102X	CER.CAPACITOR	1000p 50V
C22	NDC31HJ-101X	CER.CAPACITOR	100p 50V
C23	NCB31HK-102X	CER.CAPACITOR	1000p 50V
C24	NCB31HK-102X	CER.CAPACITOR	1000p 50V
C25	NCB31HK-102X	CER.CAPACITOR	1000p 50V
C26	NCB31HK-102X	CER.CAPACITOR	1000p 50V
C27	NCB31HK-102X	CER.CAPACITOR	1000p 50V
C28	NCB31HK-102X	CER.CAPACITOR	1000p 50V
C30	NCB21AK-105X	CER.CAPACITOR	1 10V
C31	NCB21AK-105X	CER.CAPACITOR	1 10V
C32	NCB11AK-475X	CER.CAPACITOR	4.7 10V
C33	NCB21AK-105X	CER.CAPACITOR	1 10V
C34	NCB11AK-475X	CER.CAPACITOR	4.7 10V
C35	NCB21AK-105X	CER.CAPACITOR	1 10V
C36	NCB10JK-106X	CER.CAPACITOR	10 6.3V
C37	NCB10JK-106X	CER.CAPACITOR	10 6.3V
C38	NCB21AK-105X	CER.CAPACITOR	1 10V
C39	NCB10JK-106X	CER.CAPACITOR	10 6.3V
C40	NCB10JK-106X	CER.CAPACITOR	10 6.3V
C41	NCB10JK-106X	CER.CAPACITOR	10 6.3V
C42	NCB21AK-105X	CER.CAPACITOR	1 10V
C43	NCB10JK-106X	CER.CAPACITOR	10 6.3V
C44	NCB10JK-106X	CER.CAPACITOR	10 6.3V
C45	NCB21AK-105X	CER.CAPACITOR	1 10V
C46	NCB10JK-106X	CER.CAPACITOR	10 6.3V
C47	NCB10JK-106X	CER.CAPACITOR	10 6.3V
C48	NCB10JK-106X	CER.CAPACITOR	10 6.3V
C49	NCB41CM-106X	CER.CAPACITOR	10 16V
C50	NCB41CM-106X	CER.CAPACITOR	10 16V
L1	NQL23CM-330X	COIL	33uH
L2	NQL23CM-330X	COIL	33uH
L3	NQL23CM-330X	COIL	33uH
L4	NQL24CN-220X	COIL	22uH
L5	NQL25CM-330X	COIL	33uH
L6	NQL25CM-330X	COIL	33uH
L7	NQL23CM-330X	COIL	33uH
L8	NQL24CN-220X	COIL	22uH
L9	NQL35BK-100X	COIL	10uH
L10	NQL35BK-100X	COIL	10uH
L11	NQL24CN-220X	COIL	22uH
L12	NQL23CM-330X	COIL	33uH
L13	NQL24CN-220X	COIL	22uH
L14	NQL35BK-100X	COIL	10uH
L15	NQL35BK-100X	COIL	10uH
CN1	QGA1201F2-13X	CONNECTOR	13PIN
CN2	QGA1201F2-08X	CONNECTOR	8PIN
⚠CP11	ICP-S2.3TN	ICP	
⚠CP12	ICP-S2.3TN	ICP	
⚠CP13	ICP-S2.3TN	ICP	

6.3 ROM BOARD ASSEMBLY PARTS LIST [0][3]

SLK2088-03-U0C(U)

SLK2088-03-E0C(E) [0][3]□□□□□□

Symbol No.	Part No.	Part Name	Description
IC1	M27W102-80N6-02	I.C.(M)	MITSUBISHI (U)
	M27W102-80N6-82	I.C.(M)	MITSUBISHI (E)
SK1	NNV0012-040	IC SOCKET	40PIN
IC2	74LCX16244MTD-X	I.C.(M)	NATIONAL SEMICO
IC3	74LCX16374MTD-X	I.C.(M)	NATIONAL SEMICO
IC4	TC7W00FU-X	I.C.(M)	TOSHIBA
IC5	TC7W04FU-X	I.C.(M)	TOSHIBA
R3	NRSA63J-0R0X	M.G.RESISTOR	0 1/16W
R4	NRSA63J-0R0X	M.G.RESISTOR	0 1/16W
R5	NRSA63J-473X	M.G.RESISTOR	47k 1/16W
R6	NRSA63J-473X	M.G.RESISTOR	47k 1/16W
RA1	NRZ0015-473X	RESISTOR ARRAY	47k
RA2	NRZ0015-473X	RESISTOR ARRAY	47k
RA3	NRZ0015-473X	RESISTOR ARRAY	47k
RA4	NRZ0015-473X	RESISTOR ARRAY	47k
C1	NCF31CZ-104X	CER.CAPACITOR	0.1 16V
C2	NCF31CZ-104X	CER.CAPACITOR	0.1 16V
C3	NCF31CZ-104X	CER.CAPACITOR	0.1 16V
C4	NCF31CZ-104X	CER.CAPACITOR	0.1 16V
C5	NCF31CZ-104X	CER.CAPACITOR	0.1 16V
CN1	QGB0801M2-26X	CONNECTOR	26PIN
LA1	NRZ0015-0R0X	RESISTOR ARRAY	0
LA2	NRZ0015-0R0X	RESISTOR ARRAY	0
LA3	NRZ0015-0R0X	RESISTOR ARRAY	0
LA4	NRZ0015-0R0X	RESISTOR ARRAY	0

6.4 CONN. BOARD ASSEMBLY PARTS LIST [0][4]

SLK2088-04-00A [0][4]□□□□□□

Symbol No.	Part No.	Part Name	Description
R1	NRSA63J-103X	M.G.RESISTOR	10k 1/16W
TH1	NAD0002-103X	THERMISTOR	10k
CN1	QGF0508F2-15X	CONNECTOR	15PIN
CN2	QGF0508F2-18X	CONNECTOR	18PIN

6.5 DV MAIN BOARD ASSEMBLY PARTS LIST [1][0]

SLK2087-U0D(U)

SLK2087-E0D(E) [1][0]□□□□□□

Symbol No.	Part No.	Part Name	Description
IC101	MN102F1617HL-25	I.C.(M)	MATSUSHITA (U)
	MN102F1617HL-05	I.C.(M)	MATSUSHITA (E)
IC103	X25057M8-2.7-X	I.C.(M)	XICOR
IC105	S-80823ANNP-W	I.C.(M)	SEIKO
IC106	NM24C16LEM8-X	I.C.(M)	MATSUSHITA
IC107	SN74CBT3384APWX	I.C.(M)	TEXAS
IC108	S-81240PG-PJ-X	I.C.(M)	SEIKO
IC113	TC7W04FU-X	I.C.(M)	TOSHIBA
IC201	AK4518-VF-X	I.C.(M)	ASAHI KASEI
IC202	M5218AFP-X	I.C.(M)	MITSUBISHI
IC301	MN67373	I.C.(M)	MATSUSHITA
IC302	MN47V06AF	I.C.(M)	MATSUSHITA (U)
	MN47V07AF	I.C.(M)	MATSUSHITA (E)
IC303	M65500FP	I.C.(M)	MITSUBISHI
IC304	MN41V4260TT-A07	I.C.(M)	MATSUSHITA
IC305	AD9057BRS-60-X	I.C.(M)	FUJI ELECTRO
IC306	PLL1700E-X	I.C.(M)	BURR BROWN
IC307	UPC2384GA	I.C.(M)	NEC
IC401	M31020EAVP-101	I.C.(M)	MITSUBISHI (U)
	M31020EAVP-001	I.C.(M)	MITSUBISHI (E)
IC402	TC7W14FU-X	I.C.(M)	TOSHIBA
IC403	TC7W04FU-X	I.C.(M)	TOSHIBA
IC404	NM24C16LEM8-XZB	I.C.(M)	MATSUSHITA (U)
	NM24C16LEM8-X	I.C.(M)	MATSUSHITA (E)
IC501	AN3741FAP-A	I.C.(M)	MATSUSHITA
IC503	MB88345PF	I.C.(M)	FUJITSU
IC601	BH7086KV	I.C.(M)	ROHM
IC602	T9P90EF	I.C.(M)	TOSHIBA
IC603	M52387FP	I.C.(M)	MITSUBISHI
IC604	M52684AFP-XE	I.C.(M)	MITSUBISHI
IC605	TC7SH08F-X	I.C.(M)	TOSHIBA
IC606	TC7SH00F-X	I.C.(M)	TOSHIBA
IC610	TC7SET04FU-X	I.C.(M)	TOSHIBA
IC611	TC7SHU04FU-X	I.C.(M)	TOSHIBA
IC612	TC7SHU04FU-X	I.C.(M)	TOSHIBA
IC613	TC7SHU04FU-X	I.C.(M)	TOSHIBA
IC614	TC7SHU04FU-X	I.C.(M)	TOSHIBA
IC615	AN77L03M-X	I.C.(M)	MATSUSHITA
IC801	TSB13LV11PBW	I.C.(M)	TEXAS
Q101	2SC4617/RS/-X	TRANSISTOR	ROHM
Q202	2SC4617/RS/-X	TRANSISTOR	ROHM
Q401	DTA114EUA-X	TRANSISTOR	ROHM
Q402	UMG3N-W	TRANSISTOR	ROHM
Q403	UMC3N-W	TRANSISTOR	ROHM
Q404	UMC3N-W	TRANSISTOR	ROHM
Q501	2SC4226/3-5/-X	TRANSISTOR	NEC
Q502	DTC124EUA-X	TRANSISTOR	ROHM
Q503	2SC4617/RS/-X	TRANSISTOR	ROHM
Q504	2SA1774/QRS/-X	TRANSISTOR	ROHM
Q505	DTC144EUA-X	TRANSISTOR	ROHM
Q506	DTC144EUA-X	TRANSISTOR	ROHM
Q507	DTC144EUA-X	TRANSISTOR	ROHM
Q511	2SA1774/QRS/-X	TRANSISTOR	ROHM
Q512	DTC144EUA-X	TRANSISTOR	ROHM
Q513	UMZ1N-W	TRANSISTOR	ROHM
Q602	2SC4081/QRS/-X	TRANSISTOR	ROHM
Q603	2SC4081/QRS/-X	TRANSISTOR	ROHM
Q605	2SC4081/QRS/-X	TRANSISTOR	ROHM
Q608	2SC4081/QRS/-X	TRANSISTOR	ROHM
Q609	2SC4081/QRS/-X	TRANSISTOR	ROHM
Q610	2SB1218A/RS/-X	TRANSISTOR	MATSUSHITA
Q611	2SB1218A/RS/-X	TRANSISTOR	MATSUSHITA
Q612	DTC144WUA-X	TRANSISTOR	ROHM
Q613	DTC144WUA-X	TRANSISTOR	ROHM
Q614	DTC144EUA-X	TRANSISTOR	ROHM
D102	DAN202U-X	DIODE	ROHM
D103	DAN202U-X	DIODE	ROHM
D401	DAP202U-X	DIODE	ROHM
D402	DAP202U-X	DIODE	ROHM
D601	1SS355-X	DIODE	ROHM

Symbol No.	Part No.	Part Name	Description
R101	NRSA63J-0R0X	M.G.RESISTOR	0 1/16W
R103	NRSA63J-104X	M.G.RESISTOR	100k 1/16W
R104	NRSA63J-102X	M.G.RESISTOR	1k 1/16W
R105	NRSA63J-102X	M.G.RESISTOR	1k 1/16W
R106	NRSA63J-102X	M.G.RESISTOR	1k 1/16W
R107	NRSA63J-102X	M.G.RESISTOR	1k 1/16W
R108	NRSA63J-102X	M.G.RESISTOR	1k 1/16W
R109	NRSA63J-102X	M.G.RESISTOR	1k 1/16W
R110	NRSA63J-102X	M.G.RESISTOR	1k 1/16W
R111	NRSA63J-102X	M.G.RESISTOR	1k 1/16W
R112	NRSA63J-102X	M.G.RESISTOR	1k 1/16W
R113	NRSA63J-102X	M.G.RESISTOR	1k 1/16W
R114	NRSA63J-102X	M.G.RESISTOR	1k 1/16W
R115	NRSA63J-102X	M.G.RESISTOR	1k 1/16W
R116	NRSA63J-102X	M.G.RESISTOR	1k 1/16W
R117	NRSA63J-102X	M.G.RESISTOR	1k 1/16W
R118	NRSA63J-102X	M.G.RESISTOR	1k 1/16W
R137	NRSA63J-103X	M.G.RESISTOR	10k 1/16W
R138	NRSA63J-103X	M.G.RESISTOR	10k 1/16W
R139	NRSA63J-102X	M.G.RESISTOR	1k 1/16W
R142	NRSA63J-103X	M.G.RESISTOR	10k 1/16W
R143	NRSA63J-472X	M.G.RESISTOR	4.7k 1/16W
R144	NRSA63J-472X	M.G.RESISTOR	4.7k 1/16W
R150	NRSA63J-0R0X	M.G.RESISTOR	0 1/16W
R152	NRSA63J-103X	M.G.RESISTOR	10k 1/16W
R157	NRSA63J-102X	M.G.RESISTOR	1k 1/16W
R162	NRSA63J-0R0X	M.G.RESISTOR	0 1/16W
R163	NRSA63J-103X	M.G.RESISTOR	10k 1/16W
R164	NRSA63J-0R0X	M.G.RESISTOR	0 1/16W
R169	NRSA63J-0R0X	M.G.RESISTOR	0 1/16W
R170	NRSA63J-104X	M.G.RESISTOR	100k 1/16W
R171	NRSA63J-104X	M.G.RESISTOR	100k 1/16W
R172	NRSA63J-104X	M.G.RESISTOR	100k 1/16W
R173	NRSA63J-0R0X	M.G.RESISTOR	0 1/16W
R174	NRSA63J-0R0X	M.G.RESISTOR	0 1/16W
R175	NRSA63J-473X	M.G.RESISTOR	47k 1/16W
R176	NRSA63J-0R0X	M.G.RESISTOR	0 1/16W
R177	NRSA63J-0R0X	M.G.RESISTOR	0 1/16W
R178	NRSA63J-0R0X	M.G.RESISTOR	0 1/16W
R179	NRSA63J-473X	M.G.RESISTOR	47k 1/16W
R180	NRSA63J-332X	M.G.RESISTOR	3.3k 1/16W
R181	NRSA63J-332X	M.G.RESISTOR	3.3k 1/16W
R182	NRSA63J-332X	M.G.RESISTOR	3.3k 1/16W
R183	NRSA63J-332X	M.G.RESISTOR	3.3k 1/16W
R184	NRSA63J-332X	M.G.RESISTOR	3.3k 1/16W
R185	NRSA63J-101X	M.G.RESISTOR	100 1/16W
R186	NRSA63J-101X	M.G.RESISTOR	100 1/16W
R187	NRSA63J-101X	M.G.RESISTOR	100 1/16W
R188	NRSA63J-101X	M.G.RESISTOR	100 1/16W
R189	NRSA63J-472X	M.G.RESISTOR	4.7k 1/16W
R198	NRSA63J-0R0X	M.G.RESISTOR	0 1/16W
R199	NRSA63J-0R0X	M.G.RESISTOR	0 1/16W
R202	NRSA63J-100X	M.G.RESISTOR	10 1/16W
R207	NRSA63J-0R0X	M.G.RESISTOR	0 1/16W
R208	NRSA63J-471X	M.G.RESISTOR	470 1/16W
R209	NRSA63J-471X	M.G.RESISTOR	470 1/16W
R210	NRSA63J-682X	M.G.RESISTOR	6.8k 1/16W
R211	NRSA63J-123X	M.G.RESISTOR	12k 1/16W
R212	NRSA63J-912X	M.G.RESISTOR	9.1k 1/16W
R214	NRSA63J-103X	M.G.RESISTOR	10k 1/16W
R215	NRSA63J-472X	M.G.RESISTOR	4.7k 1/16W
R216	NRSA63J-221X	M.G.RESISTOR	220 1/16W
R217	NRSA63J-912X	M.G.RESISTOR	9.1k 1/16W
R218	NRSA63J-103X	M.G.RESISTOR	10k 1/16W
R219	NRSA63J-103X	M.G.RESISTOR	10k 1/16W
R221	NRSA63J-221X	M.G.RESISTOR	220 1/16W
R223	NRSA63J-103X	M.G.RESISTOR	10k 1/16W
R301	NRSA63J-271X	M.G.RESISTOR	270 1/16W
R302	NRSA63J-105X	M.G.RESISTOR	1M 1/16W
R303	NRSA63J-0R0X	M.G.RESISTOR	0 1/16W
R304	NRSA63J-102X	M.G.RESISTOR	1k 1/16W
R305	NRSA63J-105X	M.G.RESISTOR	1M 1/16W

Symbol No.	Part No.	Part Name	Description	
R306	NRSA63J-0R0X	M.G.RESISTOR	0	1/16W
R307	NRSA63J-221X	M.G.RESISTOR	220	1/16W
R308	NRSA63J-471X	M.G.RESISTOR	470	1/16W
R309	NRSA63J-471X	M.G.RESISTOR	470	1/16W
R310	NRSA63J-221X	M.G.RESISTOR	220	1/16W
R311	NRSA63J-221X	M.G.RESISTOR	220	1/16W
R312	NRSA63J-0R0X	M.G.RESISTOR	0	1/16W
R313	NRSA63J-103X	M.G.RESISTOR	10k	1/16W
R314	NRSA63J-102X	M.G.RESISTOR	1k	1/16W
R315	NRSA63J-0R0X	M.G.RESISTOR	0	1/16W
R316	NRSA63J-102X	M.G.RESISTOR	1k	1/16W
R317	NRSA63J-682X	M.G.RESISTOR	6.8k	1/16W
R319	NRSA63J-224X	M.G.RESISTOR	220k	1/16W
R320	NRSA63J-0R0X	M.G.RESISTOR	0	1/16W
R321	NRSA63J-750X	M.G.RESISTOR	75	1/16W
R322	NRSA63J-124X	M.G.RESISTOR	120k	1/16W
R323	NRSA63J-0R0X	M.G.RESISTOR	0	1/16W
R331	NRSA63J-0R0X	M.G.RESISTOR	0	1/16W
R332	NRSA63J-0R0X	M.G.RESISTOR	0	1/16W
R333	NRSA63J-103X	M.G.RESISTOR	10k	1/16W
R334	NRSA63J-103X	M.G.RESISTOR	10k	1/16W
R335	NRSA63J-103X	M.G.RESISTOR	10k	1/16W
R336	NRSA63J-102X	M.G.RESISTOR	1k	1/16W
R337	NRSA63J-562X	M.G.RESISTOR	5.6k	1/16W
R338	NRSA63J-103X	M.G.RESISTOR	10k	1/16W
R339	NRSA63J-0R0X	M.G.RESISTOR	0	1/16W
R340	NRSA63J-103X	M.G.RESISTOR	10k	1/16W
R341	NRSA63J-103X	M.G.RESISTOR	10k	1/16W
R342	NRSA63J-333X	M.G.RESISTOR	33k	1/16W
R343	NRSA63J-0R0X	M.G.RESISTOR	0	1/16W
R344	NRSA63J-222X	M.G.RESISTOR	2.2k	1/16W
R345	NRSA63J-0R0X	M.G.RESISTOR	0	1/16W
R346	NRSA63J-333X	M.G.RESISTOR	33k	1/16W
R347	NRSA63J-0R0X	M.G.RESISTOR	0	1/16W
R348	NRSA63J-0R0X	M.G.RESISTOR	0	1/16W
R349	NRSA63J-101X	M.G.RESISTOR	100	1/16W
R350	NRSA63J-101X	M.G.RESISTOR	100	1/16W
R351	NRSA63J-103X	M.G.RESISTOR	10k	1/16W
R352	NRSA63J-103X	M.G.RESISTOR	10k	1/16W
R353	NRSA63J-103X	M.G.RESISTOR	10k	1/16W
R354	NRSA63J-102X	M.G.RESISTOR	1k	1/16W
R355	NRSA63J-0R0X	M.G.RESISTOR	0	1/16W
R356	NRSA63J-0R0X	M.G.RESISTOR	0	1/16W
R357	NRSA63J-221X	M.G.RESISTOR	220	1/16W
R402	NRSA63J-0R0X	M.G.RESISTOR	0	1/16W
R403	NRSA63J-105X	M.G.RESISTOR	1M	1/16W
R404	NRSA63J-220X	M.G.RESISTOR	22	1/16W
R405	NRSA63J-102X	M.G.RESISTOR	1k	1/16W
R406	NRSA63J-102X	M.G.RESISTOR	1k	1/16W
R407	NRSA63J-102X	M.G.RESISTOR	1k	1/16W
R408	NRSA63J-102X	M.G.RESISTOR	1k	1/16W
R409	NRSA63J-102X	M.G.RESISTOR	1k	1/16W
R410	NRSA63J-102X	M.G.RESISTOR	1k	1/16W
R411	NRSA63J-332X	M.G.RESISTOR	3.3k	1/16W
R412	NRSA63J-332X	M.G.RESISTOR	3.3k	1/16W
R413	NRSA63J-332X	M.G.RESISTOR	3.3k	1/16W
R414	NRSA63J-332X	M.G.RESISTOR	3.3k	1/16W
R415	NRSA63J-223X	M.G.RESISTOR	22k	1/16W
R416	NRSA63J-103X	M.G.RESISTOR	10k	1/16W
R417	NRSA63J-103X	M.G.RESISTOR	10k	1/16W
R418	NRSA63J-103X	M.G.RESISTOR	10k	1/16W
R419	NRSA63J-103X	M.G.RESISTOR	10k	1/16W
R420	NRSA63J-103X	M.G.RESISTOR	10k	1/16W
R421	NRSA63J-332X	M.G.RESISTOR	3.3k	1/16W
R422	NRSA63J-152X	M.G.RESISTOR	1.5k	1/16W
R423	NRSA63J-102X	M.G.RESISTOR	1k	1/16W
R424	NRSA63J-102X	M.G.RESISTOR	1k	1/16W
R425	NRSA63J-472X	M.G.RESISTOR	4.7k	1/16W
R426	NRSA63J-472X	M.G.RESISTOR	4.7k	1/16W
R427	NRSA63J-683X	M.G.RESISTOR	68k	1/16W
R428	NRSA63J-683X	M.G.RESISTOR	68k	1/16W
R429	NRSA63J-330X	M.G.RESISTOR	33	1/16W
R430	NRSA63J-101X	M.G.RESISTOR	100	1/16W

Symbol No.	Part No.	Part Name	Description	
R431	NRSA63J-332X	M.G.RESISTOR	3.3k	1/16W
R432	NRSA63J-332X	M.G.RESISTOR	3.3k	1/16W
R433	NRSA63J-332X	M.G.RESISTOR	3.3k	1/16W
R434	NRSA63J-561X	M.G.RESISTOR	560	1/16W
R435	NRSA63J-0R0X	M.G.RESISTOR	0	1/16W
R436	NRSA63J-0R0X	M.G.RESISTOR	0	1/16W
R437	NRSA63J-0R0X	M.G.RESISTOR	0	1/16W
R438	NRSA63J-561X	M.G.RESISTOR	560	1/16W
R439	NRSA63J-152X	M.G.RESISTOR	1.5k	1/16W
R440	NRSA63J-0R0X	M.G.RESISTOR	0	1/16W
R443	NRSA63J-104X	M.G.RESISTOR	100k	1/16W
R444	NRSA63J-103X	M.G.RESISTOR	10k	1/16W
R447	NRSA63J-103X	M.G.RESISTOR	10k	1/16W
R448	NRSA63J-103X	M.G.RESISTOR	10k	1/16W
R449	NRSA63J-103X	M.G.RESISTOR	10k	1/16W
R450	NRSA63J-0R0X	M.G.RESISTOR	0	1/16W
R451	NRSA63J-0R0X	M.G.RESISTOR	0	1/16W
R452	NRSA63J-0R0X	M.G.RESISTOR	0	1/16W
R454	NRSA63J-472X	M.G.RESISTOR	4.7k	1/16W
R502	NRSA63J-181X	M.G.RESISTOR	180	1/16W
R503	NRSA63J-301X	M.G.RESISTOR	300	1/16W
R504	NRSA63J-391X	M.G.RESISTOR	390	1/16W
R505	NRSA63J-152X	M.G.RESISTOR	1.5k	1/16W
R507	NRSA63J-222X	M.G.RESISTOR	2.2k	1/16W
R508	NRSA63J-392X	M.G.RESISTOR	3.9k	1/16W
R509	NRSA63J-392X	M.G.RESISTOR	3.9k	1/16W
R510	NRSA63J-221X	M.G.RESISTOR	220	1/16W
R512	NRSA63J-103X	M.G.RESISTOR	10k	1/16W
R513	NRSA63J-392X	M.G.RESISTOR	3.9k	1/16W
R514	NRSA63J-392X	M.G.RESISTOR	3.9k	1/16W
R515	NRSA63J-392X	M.G.RESISTOR	3.9k	1/16W
R516	NRSA63J-0R0X	M.G.RESISTOR	0	1/16W
R517	NRSA63J-683X	M.G.RESISTOR	68k	1/16W
R518	NRSA63J-331X	M.G.RESISTOR	330	1/16W
R519	NRSA63J-562X	M.G.RESISTOR	5.6k	1/16W
R520	NRSA63J-222X	M.G.RESISTOR	2.2k	1/16W
R521	NRSA63J-391X	M.G.RESISTOR	390	1/16W
R522	NRSA63J-121X	M.G.RESISTOR	120	1/16W
R523	NRSA63J-121X	M.G.RESISTOR	120	1/16W
R524	NRSA63J-121X	M.G.RESISTOR	120	1/16W
R525	NRSA63J-0R0X	M.G.RESISTOR	0	1/16W
R526	NRSA63J-822X	M.G.RESISTOR	8.2k	1/16W
R527	NRSA63J-222X	M.G.RESISTOR	2.2k	1/16W
R528	NRSA63J-221X	M.G.RESISTOR	220	1/16W
R529	NRSA63J-562X	M.G.RESISTOR	5.6k	1/16W
R530	NRSA63J-392X	M.G.RESISTOR	3.9k	1/16W
R533	NRSA63J-472X	M.G.RESISTOR	4.7k	1/16W
R534	NRSA63J-563X	M.G.RESISTOR	56k	1/16W
R535	NRSA63J-564X	M.G.RESISTOR	560k	1/16W
R536	NRSA63J-392X	M.G.RESISTOR	3.9k	1/16W
R537	NRSA63J-561X	M.G.RESISTOR	560	1/16W
R538	NRSA63J-224X	M.G.RESISTOR	220k	1/16W
R539	NRSA63J-680X	M.G.RESISTOR	68	1/16W
R540	NRSA63J-103X	M.G.RESISTOR	10k	1/16W
R541	NRSA63J-392X	M.G.RESISTOR	3.9k	1/16W
R555	NRSA63J-0R0X	M.G.RESISTOR	0	1/16W
R556	NRSA63J-0R0X	M.G.RESISTOR	0	1/16W
R564	NRSA63J-124X	M.G.RESISTOR	120k	1/16W
R565	NRSA63J-563X	M.G.RESISTOR	56k	1/16W
R566	NRSA63J-472X	M.G.RESISTOR	4.7k	1/16W
R567	NRSA63J-102X	M.G.RESISTOR	1k	1/16W
R568	NRSA63J-102X	M.G.RESISTOR	1k	1/16W
R601	NRSA63J-104X	M.G.RESISTOR	100k	1/16W
R602	NRSA63J-104X	M.G.RESISTOR	100k	1/16W
R603	NRSA63J-103X	M.G.RESISTOR	10k	1/16W
R604	NRSA63J-103X	M.G.RESISTOR	10k	1/16W
R605	NRSA63J-121X	M.G.RESISTOR	120	1/16W
R606	NRSA63J-682X	M.G.RESISTOR	6.8k	1/16W
R607	NRSA63J-332X	M.G.RESISTOR	3.3k	1/16W
R608	NRSA63J-101X	M.G.RESISTOR	100	1/16W
R609	NRSA63J-563X	M.G.RESISTOR	56k	1/16W
R610	NRSA63J-223X	M.G.RESISTOR	22k	1/16W
R611	NRSA63J-183X	M.G.RESISTOR	18k	1/16W

[DV MAIN]

Symbol No.	Part No.	Part Name	Description	
R612	NRSA63J-391X	M.G.RESISTOR	390	1/16W
R613	NRSA63J-223X	M.G.RESISTOR	22k	1/16W
R614	NRSA63J-223X	M.G.RESISTOR	22k	1/16W
R615	NRSA63J-152X	M.G.RESISTOR	1.5k	1/16W
R616	NRSA63J-101X	M.G.RESISTOR	100	1/16W
R617	NRSA63J-153X	M.G.RESISTOR	15k	1/16W
R618	NRSA63J-183X	M.G.RESISTOR	18k	1/16W
R619	NRSA63J-471X	M.G.RESISTOR	470	1/16W
R620	NRSA63J-123X	M.G.RESISTOR	12k	1/16W
R621	NRSA63J-471X	M.G.RESISTOR	470	1/16W
R622	NRSA63J-123X	M.G.RESISTOR	12k	1/16W
R623	NRSA63J-105X	M.G.RESISTOR	1M	1/16W
R624	NRSA63J-105X	M.G.RESISTOR	1M	1/16W
R625	NRSA63J-392X	M.G.RESISTOR	3.9k	1/16W
R626	NRSA63J-392X	M.G.RESISTOR	3.9k	1/16W
R629	NRSA63J-102X	M.G.RESISTOR	1k	1/16W
R631	NRSA63J-0R0X	M.G.RESISTOR	0	1/16W
R632	NRSA63J-0R0X	M.G.RESISTOR	0	1/16W
R633	NRSA63J-123X	M.G.RESISTOR	12k	1/16W
R634	NRSA63J-123X	M.G.RESISTOR	12k	1/16W
R635	NRSA63J-183X	M.G.RESISTOR	18k	1/16W
R636	NRSA63J-183X	M.G.RESISTOR	18k	1/16W
R637	NRSA63J-332X	M.G.RESISTOR	3.3k	1/16W
R638	NRSA63J-823X	M.G.RESISTOR	82k	1/16W
R645	NRSA63J-0R0X	M.G.RESISTOR	0	1/16W
R647	NRSA63J-102X	M.G.RESISTOR	1k	1/16W
R651	NRSA63J-0R0X	M.G.RESISTOR	0	1/16W
R652	NRSA63J-0R0X	M.G.RESISTOR	0	1/16W
R653	NRSA63J-0R0X	M.G.RESISTOR	0	1/16W
R654	NRSA63J-0R0X	M.G.RESISTOR	0	1/16W
R655	NRSA63J-0R0X	M.G.RESISTOR	0	1/16W
R656	NRSA63J-562X	M.G.RESISTOR	5.6k	1/16W
R657	NRSA63J-472X	M.G.RESISTOR	4.7k	1/16W
R658	NRSA63J-103X	M.G.RESISTOR	10k	1/16W
R659	NRSA63J-103X	M.G.RESISTOR	10k	1/16W
R660	NRSA63J-223X	M.G.RESISTOR	22k	1/16W
R661	NRSA63J-223X	M.G.RESISTOR	22k	1/16W
R662	NRSA63J-273X	M.G.RESISTOR	27k	1/16W
R663	NRSA63J-223X	M.G.RESISTOR	22k	1/16W
R664	NRSA63J-391X	M.G.RESISTOR	390	1/16W
R665	NRSA63J-154X	M.G.RESISTOR	150k	1/16W
R666	NRSA63J-471X	M.G.RESISTOR	470	1/16W
R667	NRSA63J-103X	M.G.RESISTOR	10k	1/16W
R668	NRSA63J-271X	M.G.RESISTOR	270	1/16W
R669	NRSA63J-332X	M.G.RESISTOR	3.3k	1/16W
R670	NRSA63J-0R0X	M.G.RESISTOR	0	1/16W
R671	NRSA63J-473X	M.G.RESISTOR	47k	1/16W
R672	NRSA63J-273X	M.G.RESISTOR	27k	1/16W
R673	NRSA63J-102X	M.G.RESISTOR	1k	1/16W
R674	NRSA63J-0R0X	M.G.RESISTOR	0	1/16W
R675	NRSA63J-0R0X	M.G.RESISTOR	0	1/16W
R676	NRSA63J-0R0X	M.G.RESISTOR	0	1/16W
R678	NRSA63J-0R0X	M.G.RESISTOR	0	1/16W
R679	NRSA63J-103X	M.G.RESISTOR	10k	1/16W
R680	NRSA63J-0R0X	M.G.RESISTOR	0	1/16W
R681	NRSA63J-0R0X	M.G.RESISTOR	0	1/16W
R682	NRSA63J-103X	M.G.RESISTOR	10k	1/16W
R683	NRSA63J-103X	M.G.RESISTOR	10k	1/16W
R684	NRSA63J-0R0X	M.G.RESISTOR	0	1/16W
R685	NRSA63J-472X	M.G.RESISTOR	4.7k	1/16W
R686	NRSA63J-103X	M.G.RESISTOR	10k	1/16W
R687	NRSA63J-103X	M.G.RESISTOR	10k	1/16W
R688	NRSA63J-104X	M.G.RESISTOR	100k	1/16W
R690	NRSA63J-564X	M.G.RESISTOR	560k	1/16W
R691	NRSA63J-101X	M.G.RESISTOR	100	1/16W
R692	NRSA63J-105X	M.G.RESISTOR	1M	1/16W
R693	NRSA63J-104X	M.G.RESISTOR	100k	1/16W
R694	NRSA63J-0R0X	M.G.RESISTOR	0	1/16W
R695	NRSA63J-104X	M.G.RESISTOR	100k	1/16W
R696	NRSA63J-471X	M.G.RESISTOR	470	1/16W
R697	NRSA63J-471X	M.G.RESISTOR	470	1/16W
R698	NRSA63J-122X	M.G.RESISTOR	1.2k	1/16W
R699	NRSA63J-750X	M.G.RESISTOR	75	1/16W

Symbol No.	Part No.	Part Name	Description	
R701	NRSA63J-392X	M.G.RESISTOR	3.9k	1/16W
R702	NRSA63J-0R0X	M.G.RESISTOR	0	1/16W
R703	NRSA63J-0R0X	M.G.RESISTOR	0	1/16W
R704	NRSA63J-0R0X	M.G.RESISTOR	0	1/16W
R705	NRSA63J-0R0X	M.G.RESISTOR	0	1/16W
R706	NRSA63J-0R0X	M.G.RESISTOR	0	1/16W
R709	NRSA63J-0R0X	M.G.RESISTOR	0	1/16W
R710	NRSA63J-0R0X	M.G.RESISTOR	0	1/16W
R716	NRSA63J-0R0X	M.G.RESISTOR	0	1/16W
R717	NRSA63J-0R0X	M.G.RESISTOR	0	1/16W
R718	NRSA63J-0R0X	M.G.RESISTOR	0	1/16W
R719	NRSA63J-0R0X	M.G.RESISTOR	0	1/16W
R721	NRSA63J-102X	M.G.RESISTOR	1k	1/16W
R722	NRSA63J-105X	M.G.RESISTOR	1M	1/16W
R723	NRSA63J-102X	M.G.RESISTOR	1k	1/16W
R724	NRSA63J-102X	M.G.RESISTOR	1k	1/16W
R725	NRSA63J-102X	M.G.RESISTOR	1k	1/16W
R726	NRSA63J-101X	M.G.RESISTOR	100	1/16W
R727	NRSA63J-105X	M.G.RESISTOR	1M	1/16W
R728	NRSA63J-102X	M.G.RESISTOR	1k	1/16W
R729	NRSA63J-102X	M.G.RESISTOR	1k	1/16W
R730	NRSA63J-222X	M.G.RESISTOR	2.2k	1/16W
R731	NRSA63J-222X	M.G.RESISTOR	2.2k	1/16W
R732	NRSA63J-0R0X	M.G.RESISTOR	0	1/16W
R733	NRSA63J-0R0X	M.G.RESISTOR	0	1/16W
R734	NRSA63J-222X	M.G.RESISTOR	2.2k	1/16W
R736	NRSA63J-222X	M.G.RESISTOR	2.2k	1/16W
R738	NRSA63J-0R0X	M.G.RESISTOR	0	1/16W
R739	NRSA63J-0R0X	M.G.RESISTOR	0	1/16W
R801	NRSA63J-103X	M.G.RESISTOR	10k	1/16W
R802	NRSA63J-103X	M.G.RESISTOR	10k	1/16W
R803	NRSA63J-103X	M.G.RESISTOR	10k	1/16W
R804	NRSA63J-103X	M.G.RESISTOR	10k	1/16W
R805	NRSA63J-103X	M.G.RESISTOR	10k	1/16W
R806	NRSA63J-104X	M.G.RESISTOR	100k	1/16W
R808	NRSA63J-103X	M.G.RESISTOR	10k	1/16W
R809	NRSA63J-103X	M.G.RESISTOR	10k	1/16W
R810	NRSA63J-103X	M.G.RESISTOR	10k	1/16W
R811	NRSA63J-103X	M.G.RESISTOR	10k	1/16W
R812	NRSA63J-103X	M.G.RESISTOR	10k	1/16W
R813	NRSA63J-103X	M.G.RESISTOR	10k	1/16W
R815	NRSA63J-0R0X	M.G.RESISTOR	0	1/16W
R816	NRSA63J-270X	M.G.RESISTOR	27	1/16W
R817	NRSA63J-103X	M.G.RESISTOR	10k	1/16W
R818	NRSA63J-103X	M.G.RESISTOR	10k	1/16W
R819	NRSA63J-103X	M.G.RESISTOR	10k	1/16W
R823	NRSA63J-394X	M.G.RESISTOR	390k	1/16W
R824	NRSA63J-332X	M.G.RESISTOR	3.3k	1/16W
R825	NRSA63J-272X	M.G.RESISTOR	2.7k	1/16W
R826	NRSA63J-103X	M.G.RESISTOR	10k	1/16W
R831	NRSA63J-0R0X	M.G.RESISTOR	0	1/16W
R832	NRSA63J-512X	M.G.RESISTOR	5.1k	1/16W
R833	NRVA63D-560X	C.M.F.RESISTOR	56	1/16W
R834	NRVA63D-560X	C.M.F.RESISTOR	56	1/16W
R835	NRVA63D-560X	C.M.F.RESISTOR	56	1/16W
R836	NRVA63D-560X	C.M.F.RESISTOR	56	1/16W
R837	NRSA63J-0R0X	M.G.RESISTOR	0	1/16W
R838	NRSA63J-105X	M.G.RESISTOR	1M	1/16W
RA101	NRZ0015-102X	RESISTOR ARRAY	1k	
RA102	NRZ0015-102X	RESISTOR ARRAY	1k	
RA103	NRZ0012-104X	RESISTOR ARRAY	100k	
RA104	NRZ0012-104X	RESISTOR ARRAY	100k	
RA105	NRZ0015-102X	RESISTOR ARRAY	1k	
RA106	NRZ0015-102X	RESISTOR ARRAY	1k	
RA107	NRZ0012-104X	RESISTOR ARRAY	100k	
RA108	NRZ0012-104X	RESISTOR ARRAY	100k	
RA401	NRZ0015-102X	RESISTOR ARRAY	1k	
RA402	NRZ0015-102X	RESISTOR ARRAY	1k	
RA403	NRZ0015-473X	RESISTOR ARRAY	47k	

Symbol No.	Part No.	Part Name	Description	
C101	NCB31HK-103X	CER.CAPACITOR	0.01	50V
C102	NCB31HK-103X	CER.CAPACITOR	0.01	50V
C103	NCB31HK-103X	CER.CAPACITOR	0.01	50V
C104	NCB31HK-103X	CER.CAPACITOR	0.01	50V
C105	NCB31HK-103X	CER.CAPACITOR	0.01	50V
C106	NCB31HK-103X	CER.CAPACITOR	0.01	50V
C108	NCB31HK-103X	CER.CAPACITOR	0.01	50V
C109	NBE51CM-226X	TAN.CAPACITOR	22	16V
C110	NCB31HK-103X	CER.CAPACITOR	0.01	50V
C112	NCB31HK-103X	CER.CAPACITOR	0.01	50V
C113	NCF31CZ-104X	CER.CAPACITOR	0.1	16V
C114	NCF31CZ-104X	CER.CAPACITOR	0.1	16V
C115	NCB31HK-103X	CER.CAPACITOR	0.01	50V
C116	NBE51CM-226X	TAN.CAPACITOR	22	16V
C117	NCF21CZ-105X	CER.CAPACITOR	1	16V
C118	NDC31HJ-100X	CER.CAPACITOR	10p	50V
C119	NCB31HK-103X	CER.CAPACITOR	0.01	50V
C120	NDC31HJ-100X	CER.CAPACITOR	10p	50V
C125	NBE41AM-226X	TAN.CAPACITOR	22	10V
C126	NBE51CM-226X	TAN.CAPACITOR	22	16V
C127	NBE40JM-226X	TAN.CAPACITOR	22	6.3V
C128	NCB31HK-103X	CER.CAPACITOR	0.01	50V
C130	NCB31HK-103X	CER.CAPACITOR	0.01	50V
C135	NBE41AM-226X	TAN.CAPACITOR	22	10V
C136	NCB31HK-103X	CER.CAPACITOR	0.01	50V
C141	NCF31CZ-104X	CER.CAPACITOR	0.1	16V
C145	NCB31HK-103X	CER.CAPACITOR	0.01	50V
C146	NCB31HK-103X	CER.CAPACITOR	0.01	50V
C147	NCB31HK-103X	CER.CAPACITOR	0.01	50V
C148	NCB31HK-103X	CER.CAPACITOR	0.01	50V
C149	NCB31HK-103X	CER.CAPACITOR	0.01	50V
C150	NCB31HK-103X	CER.CAPACITOR	0.01	50V
C201	NBE41AM-226X	TAN.CAPACITOR	22	10V
C202	NBE41AM-226X	TAN.CAPACITOR	22	10V
C203	NCB31CK-104X	CER.CAPACITOR	0.1	16V
C204	NCB31CK-104X	CER.CAPACITOR	0.1	16V
C205	NBE41AM-475X	TAN.CAPACITOR	4.7	10V
C206	NCB31CK-104X	CER.CAPACITOR	0.1	16V
C207	NCF21CZ-105X	CER.CAPACITOR	1	16V
C208	NCF21CZ-105X	CER.CAPACITOR	1	16V
C209	NCB31CK-104X	CER.CAPACITOR	0.1	16V
C210	NCB31HK-222X	CER.CAPACITOR	2200p	50V
C211	NCB31HK-222X	CER.CAPACITOR	2200p	50V
C212	NBE41AM-475X	TAN.CAPACITOR	4.7	10V
C213	NBE41AM-475X	TAN.CAPACITOR	4.7	10V
C214	NCB31CK-104X	CER.CAPACITOR	0.1	16V
C215	NCB31CK-104X	CER.CAPACITOR	0.1	16V
C216	NBE41CM-226X	TAN.CAPACITOR	22	16V
C217	NCB31CK-104X	CER.CAPACITOR	0.1	16V
C218	NCB31CK-104X	CER.CAPACITOR	0.1	16V
C219	NBE41AM-226X	TAN.CAPACITOR	22	10V
C220	NBE41CM-106X	TAN.CAPACITOR	10	16V
C221	NBE41AM-106X	TAN.CAPACITOR	10	10V
C222	NBE41CM-106X	TAN.CAPACITOR	10	16V
C223	NBE41AM-106X	TAN.CAPACITOR	10	10V
C224	NDC31HJ-221X	CER.CAPACITOR	220p	50V
C225	NCB31HK-152X	CER.CAPACITOR	1500p	50V
C226	NDC31HJ-221X	CER.CAPACITOR	220p	50V
C227	NCB31HK-472X	CER.CAPACITOR	4700p	50V
C228	NCB31HK-472X	CER.CAPACITOR	4700p	50V
C231	NCB31HK-152X	CER.CAPACITOR	1500p	50V
C303	NCB31HK-103X	CER.CAPACITOR	0.01	50V
C304	NCB31HK-103X	CER.CAPACITOR	0.01	50V
C305	NCB31HK-103X	CER.CAPACITOR	0.01	50V
C306	NCB31CK-104X	CER.CAPACITOR	0.1	16V
C307	NCB31HK-103X	CER.CAPACITOR	0.01	50V
C308	NCB31HK-103X	CER.CAPACITOR	0.01	50V
C309	NBE51AM-226X	TAN.CAPACITOR	22	10V
C310	NCB31HK-103X	CER.CAPACITOR	0.01	50V
C311	NCB31HK-103X	CER.CAPACITOR	0.01	50V
C312	NCB31HK-103X	CER.CAPACITOR	0.01	50V
C313	NCB31HK-103X	CER.CAPACITOR	0.01	50V
C314	NBE51AM-226X	TAN.CAPACITOR	22	10V

Symbol No.	Part No.	Part Name	Description	
C316	NCB31CK-104X	CER.CAPACITOR	0.1	16V
C317	NCB31HK-103X	CER.CAPACITOR	0.01	50V
C318	NCB31HK-103X	CER.CAPACITOR	0.01	50V
C319	NCB31HK-103X	CER.CAPACITOR	0.01	50V
C320	NBE51AM-226X	TAN.CAPACITOR	22	10V
C321	NCB31CK-104X	CER.CAPACITOR	0.1	16V
C323	NCB31HK-103X	CER.CAPACITOR	0.01	50V
C324	NCB31HK-103X	CER.CAPACITOR	0.01	50V
C325	NCB31CK-104X	CER.CAPACITOR	0.1	16V
C326	NCB31HK-103X	CER.CAPACITOR	0.01	50V
C327	NCB31CK-104X	CER.CAPACITOR	0.1	16V
C328	NCB31CK-104X	CER.CAPACITOR	0.1	16V
C329	NCB31CK-104X	CER.CAPACITOR	0.1	16V
C330	NCB31CK-104X	CER.CAPACITOR	0.1	16V
C331	NCB31HK-103X	CER.CAPACITOR	0.01	50V
C332	NBE51AM-226X	TAN.CAPACITOR	22	10V
C333	NCB31HK-103X	CER.CAPACITOR	0.01	50V
C334	NBE71CM-476X	TAN.CAPACITOR	47	16V
C335	NCB31CK-104X	CER.CAPACITOR	0.1	16V
C336	NCB31HK-103X	CER.CAPACITOR	0.01	50V
C337	NCB31CK-104X	CER.CAPACITOR	0.1	16V
C338	NBE51CM-226X	TAN.CAPACITOR	22	16V
C339	NCB31HK-103X	CER.CAPACITOR	0.01	50V
C340	NCB31CK-104X	CER.CAPACITOR	0.1	16V
C342	NCB31HK-103X	CER.CAPACITOR	0.01	50V
C343	NBE51AM-226X	TAN.CAPACITOR	22	10V
C344	NCB31HK-103X	CER.CAPACITOR	0.01	50V
C345	NCB31HK-103X	CER.CAPACITOR	0.01	50V
C346	NCB31HK-103X	CER.CAPACITOR	0.01	50V
C347	NCB31HK-103X	CER.CAPACITOR	0.01	50V
C348	NCB31HK-103X	CER.CAPACITOR	0.01	50V
C349	NCB31HK-103X	CER.CAPACITOR	0.01	50V
C350	NCB31HK-103X	CER.CAPACITOR	0.01	50V
C351	NBE51AM-226X	TAN.CAPACITOR	22	10V
C352	NBE51CM-226X	TAN.CAPACITOR	22	16V
C353	NDC31HJ-101X	CER.CAPACITOR	100p	50V
C354	NCB31CK-823X	CER.CAPACITOR	0.082	16V
C359	NCB31HK-103X	CER.CAPACITOR	0.01	50V
C361	NCB31CK-223X	CER.CAPACITOR	0.022	16V
C362	NCB31CK-223X	CER.CAPACITOR	0.022	16V
C363	NCB31CK-223X	CER.CAPACITOR	0.022	16V
C364	NDC31HJ-150X	CER.CAPACITOR	15p	50V
C366	NDC31HJ-4R0X	CER.CAPACITOR	4p	50V
C367	NBE41VM-474X	TAN.CAPACITOR	0.47	35V
C368	NCB31HK-103X	CER.CAPACITOR	0.01	50V
C369	NBE51AM-226X	TAN.CAPACITOR	22	10V
C401	NBE51AM-476X	TAN.CAPACITOR	47	10V
C402	NBE51AM-476X	TAN.CAPACITOR	47	10V
C403	NCF31CZ-104X	CER.CAPACITOR	0.1	16V
C404	NCF31CZ-104X	CER.CAPACITOR	0.1	16V
C405	NCF31CZ-104X	CER.CAPACITOR	0.1	16V
C406	NCF31CZ-104X	CER.CAPACITOR	0.1	16V
C407	NCF31CZ-104X	CER.CAPACITOR	0.1	16V
C408	NCF31CZ-104X	CER.CAPACITOR	0.1	16V
C409	NDC31HJ-120X	CER.CAPACITOR	12p	50V
C410	NDC31HJ-120X	CER.CAPACITOR	12p	50V
C411	NCB31CK-223X	CER.CAPACITOR	0.022	16V
C412	NCB31CK-223X	CER.CAPACITOR	0.022	16V
C413	NCB31CK-223X	CER.CAPACITOR	0.022	16V
C414	NCB31CK-223X	CER.CAPACITOR	0.022	16V
C415	NBE41AM-226X	TAN.CAPACITOR	22	10V
C416	NCF31CZ-104X	CER.CAPACITOR	0.1	16V
C417	NCF21CZ-105X	CER.CAPACITOR	1	16V
C418	NCF31CZ-104X	CER.CAPACITOR	0.1	16V
C419	NCB31EK-103X	CER.CAPACITOR	0.01	25V
C501	NDC31HJ-220X	CER.CAPACITOR	22p	50V
C502	NCF31CZ-104X	CER.CAPACITOR	0.1	16V
C503	NCB31HK-103X	CER.CAPACITOR	0.01	50V
C505	NCB31HK-103X	CER.CAPACITOR	0.01	50V
C506	NCB31HK-103X	CER.CAPACITOR	0.01	50V
C507	NCB31HK-103X	CER.CAPACITOR	0.01	50V
C508	NCB31HK-103X	CER.CAPACITOR	0.01	50V
C509	NCB31HK-103X	CER.CAPACITOR	0.01	50V

[DV MAIN]

Symbol No.	Part No.	Part Name	Description	
C510	NCB31HK-681X	CER.CAPACITOR	680p	50V
C511	NCB31HK-103X	CER.CAPACITOR	0.01	50V
C512	NCB31HK-103X	CER.CAPACITOR	0.01	50V
C513	NCB31HK-103X	CER.CAPACITOR	0.01	50V
C514	NCB31HK-103X	CER.CAPACITOR	0.01	50V
C515	NCF31CZ-104X	CER.CAPACITOR	0.1	16V
C516	NCB31HK-103X	CER.CAPACITOR	0.01	50V
C517	NCF31CZ-104X	CER.CAPACITOR	0.1	16V
C518	NCF31CZ-104X	CER.CAPACITOR	0.1	16V
C519	NCB31HK-103X	CER.CAPACITOR	0.01	50V
C520	NCB31HK-103X	CER.CAPACITOR	0.01	50V
C521	NCB31HK-103X	CER.CAPACITOR	0.01	50V
C522	NBE41AM-226X	TAN.CAPACITOR	22	10V
C523	NCB31HK-103X	CER.CAPACITOR	0.01	50V
C524	NCB31HK-103X	CER.CAPACITOR	0.01	50V
C525	NCB31HK-103X	CER.CAPACITOR	0.01	50V
C526	NCB31CK-273X	CER.CAPACITOR	0.027	16V
C527	NCB31HK-103X	CER.CAPACITOR	0.01	50V
C528	NCB21AK-105X	CER.CAPACITOR	1	10V
C529	NCB31HK-103X	CER.CAPACITOR	0.01	50V
C531	NCB31HK-103X	CER.CAPACITOR	0.01	50V
C532	NCB31HK-103X	CER.CAPACITOR	0.01	50V
C533	NBE41AM-226X	TAN.CAPACITOR	22	10V
C534	NCB31HK-103X	CER.CAPACITOR	0.01	50V
C537	NCB31HK-103X	CER.CAPACITOR	0.01	50V
C538	NCB31HK-103X	CER.CAPACITOR	0.01	50V
C539	NCB31HK-103X	CER.CAPACITOR	0.01	50V
C540	NCB31CK-104X	CER.CAPACITOR	0.1	16V
C541	NDC31HJ-151X	CER.CAPACITOR	150p	50V
C542	NCB31HK-103X	CER.CAPACITOR	0.01	50V
C543	NCB31HK-103X	CER.CAPACITOR	0.01	50V
C544	NCB31HK-152X	CER.CAPACITOR	1500p	50V
C545	NCF21CZ-225X	CER.CAPACITOR	2.2	16V
C546	NCB31HK-103X	CER.CAPACITOR	0.01	50V
C547	NBE41AM-226X	TAN.CAPACITOR	22	10V
C555	NCB31CK-223X	CER.CAPACITOR	0.022	16V
C579	NBE51CM-226X	TAN.CAPACITOR	22	16V
C580	NBE41AM-226X	TAN.CAPACITOR	22	10V
C581	NCB31HK-103X	CER.CAPACITOR	0.01	50V
C582	NCB31HK-103X	CER.CAPACITOR	0.01	50V
C583	NBE71CM-476X	TAN.CAPACITOR	47	16V
C584	NBE71CM-476X	TAN.CAPACITOR	47	16V
C590	NCB31HK-103X	CER.CAPACITOR	0.01	50V
C591	NCB31HK-103X	CER.CAPACITOR	0.01	50V
C592	NCB31CK-273X	CER.CAPACITOR	0.027	16V
C593	NCB31HK-103X	CER.CAPACITOR	0.01	50V
C601	NCF21CZ-105X	CER.CAPACITOR	1	16V
C602	NDC31HJ-101X	CER.CAPACITOR	100p	50V
C603	NCF21CZ-105X	CER.CAPACITOR	1	16V
C604	NCB31EK-103X	CER.CAPACITOR	0.01	25V
C605	NDC31HJ-101X	CER.CAPACITOR	100p	50V
C606	NDC31HJ-220X	CER.CAPACITOR	22p	50V
C607	NDC31HJ-150X	CER.CAPACITOR	15p	50V
C608	NCF21CZ-105X	CER.CAPACITOR	1	16V
C609	NCB31EK-103X	CER.CAPACITOR	0.01	25V
C610	NCB31EK-103X	CER.CAPACITOR	0.01	25V
C611	NCB31CK-104X	CER.CAPACITOR	0.1	16V
C612	NCB31HK-561X	CER.CAPACITOR	560p	50V
C613	NCB31EK-103X	CER.CAPACITOR	0.01	25V
C614	NDC31HJ-5R0X	CER.CAPACITOR	5p	50V
C615	NDC31HJ-100X	CER.CAPACITOR	10p	50V
C617	NCB31EK-103X	CER.CAPACITOR	0.01	25V
C619	NCB31EK-103X	CER.CAPACITOR	0.01	25V
C620	NCB31CK-104X	CER.CAPACITOR	0.1	16V
C621	NCB31CK-104X	CER.CAPACITOR	0.1	16V
C622	NCB31CK-104X	CER.CAPACITOR	0.1	16V
C623	NCB31CK-104X	CER.CAPACITOR	0.1	16V
C624	NCB31CK-104X	CER.CAPACITOR	0.1	16V
C625	NCB31CK-104X	CER.CAPACITOR	0.1	16V
C626	NCB31EK-103X	CER.CAPACITOR	0.01	25V
C627	NCB31CK-104X	CER.CAPACITOR	0.1	16V
C628	NCB31CK-104X	CER.CAPACITOR	0.1	16V
C629	NCB31CK-104X	CER.CAPACITOR	0.1	16V

Symbol No.	Part No.	Part Name	Description	
C630	NCB31CK-104X	CER.CAPACITOR	0.1	16V
C631	NCB31CK-104X	CER.CAPACITOR	0.1	16V
C632	NCB31CK-104X	CER.CAPACITOR	0.1	16V
C633	NCB31EK-103X	CER.CAPACITOR	0.01	25V
C634	NCB31EK-103X	CER.CAPACITOR	0.01	25V
C635	NCB31EK-103X	CER.CAPACITOR	0.01	25V
C638	NCB31EK-103X	CER.CAPACITOR	0.01	25V
C639	NCB31CK-104X	CER.CAPACITOR	0.1	16V
C640	NBE51AM-226X	TAN.CAPACITOR	22	10V
C641	NBE51AM-226X	TAN.CAPACITOR	22	10V
C642	NCB31CK-104X	CER.CAPACITOR	0.1	16V
C643	NCB31CK-104X	CER.CAPACITOR	0.1	16V
C644	NCB31CK-104X	CER.CAPACITOR	0.1	16V
C645	NCB31CK-104X	CER.CAPACITOR	0.1	16V
C646	NCB31CK-104X	CER.CAPACITOR	0.1	16V
C647	NCB31CK-104X	CER.CAPACITOR	0.1	16V
C649	NCB31CK-104X	CER.CAPACITOR	0.1	16V
C650	NCB31CK-104X	CER.CAPACITOR	0.1	16V
C651	NBE51AM-226X	TAN.CAPACITOR	22	10V
C652	NCB31CK-104X	CER.CAPACITOR	0.1	16V
C653	NBE51AM-226X	TAN.CAPACITOR	22	10V
C654	NBE51AM-226X	TAN.CAPACITOR	22	10V
C655	NBE51AM-226X	TAN.CAPACITOR	22	10V
C656	NCB31EK-103X	CER.CAPACITOR	0.01	25V
C657	NDC31HJ-101X	CER.CAPACITOR	100p	50V
C658	NCB21CK-474X	CER.CAPACITOR	0.47	16V
C659	NCB31EK-103X	CER.CAPACITOR	0.01	25V
C660	NCB31CK-473X	CER.CAPACITOR	0.047	16V
C661	NCB21CK-224X	CER.CAPACITOR	0.22	16V
C662	NBE41AM-106X	TAN.CAPACITOR	10	10V
C663	NBE21CM-684X	TAN.CAPACITOR	0.68	16V
C664	NCB31HK-681X	CER.CAPACITOR	680p	50V
C665	NCB31EK-103X	CER.CAPACITOR	0.01	25V
C666	NDC31HJ-270X	CER.CAPACITOR	27p	50V
C667	NCB31CK-273X	CER.CAPACITOR	0.027	16V
C668	NCF21CZ-105X	CER.CAPACITOR	1	16V
C669	NBE61CM-107X	TAN.CAPACITOR	100	16V
C672	NCB31HK-152X	CER.CAPACITOR	1500p	50V
C673	NCB31EK-103X	CER.CAPACITOR	0.01	25V
C674	NCB31HK-102X	CER.CAPACITOR	1000p	50V
C675	NCB31EK-103X	CER.CAPACITOR	0.01	25V
C676	NBE61CM-107X	TAN.CAPACITOR	100	16V
C677	NCB31EK-103X	CER.CAPACITOR	0.01	25V
C678	NCB31CK-104X	CER.CAPACITOR	0.1	16V
C679	NBE41AM-106X	TAN.CAPACITOR	10	10V
C680	NBE41CM-335X	TAN.CAPACITOR	3.3	16V
C681	NCB31EK-103X	CER.CAPACITOR	0.01	25V
C682	NBE61CM-107X	TAN.CAPACITOR	100	16V
C683	NCB31EK-103X	CER.CAPACITOR	0.01	25V
C684	NCB31EK-103X	CER.CAPACITOR	0.01	25V
C685	NCB31EK-103X	CER.CAPACITOR	0.01	25V
C687	NCF21CZ-105X	CER.CAPACITOR	1	16V
C688	NCB31EK-103X	CER.CAPACITOR	0.01	25V
C689	NCB31EK-103X	CER.CAPACITOR	0.01	25V
C690	NCF21CZ-105X	CER.CAPACITOR	1	16V
C691	NCB31CK-104X	CER.CAPACITOR	0.1	16V
C692	NCF21CZ-105X	CER.CAPACITOR	1	16V
C693	NCF21CZ-105X	CER.CAPACITOR	1	16V
C694	NBE21CM-225X	TAN.CAPACITOR	2.2	16V
C695	NCB31CK-104X	CER.CAPACITOR	0.1	16V
C696	NDC31HJ-150X	CER.CAPACITOR	15p	50V
C697	NCB31CK-104X	CER.CAPACITOR	0.1	16V
C698	NCB31CK-104X	CER.CAPACITOR	0.1	16V
C699	NDC31HJ-150X	CER.CAPACITOR	15p	50V
C700	NCB31CK-104X	CER.CAPACITOR	0.1	16V
C706	NCB31EK-103X	CER.CAPACITOR	0.01	25V
C709	NCB31EK-103X	CER.CAPACITOR	0.01	25V
C710	NCB31EK-103X	CER.CAPACITOR	0.01	25V
C711	NBE51AM-226X	TAN.CAPACITOR	22	10V
C712	NBE51AM-226X	TAN.CAPACITOR	22	10V
C713	NCB31CK-104X	CER.CAPACITOR	0.1	16V
C714	NCB31CK-104X	CER.CAPACITOR	0.1	16V

Symbol No.	Part No.	Part Name	Description
C717	NCB31CK-104X	CER.CAPACITOR	0.1 16V
C718	NCB31EK-103X	CER.CAPACITOR	0.01 25V
C719	NCB31CK-104X	CER.CAPACITOR	0.1 16V
C720	NCB31CK-104X	CER.CAPACITOR	0.1 16V
C721	NDC31HJ-180X	CER.CAPACITOR	18p 50V
C722	NDC31HJ-180X	CER.CAPACITOR	18p 50V
C738	NCB41CM-106X	CER.CAPACITOR	10 16V
C739	NCB41CM-106X	CER.CAPACITOR	10 16V
C801	NBE41AM-226X	TAN.CAPACITOR	22 10V
C802	NCF31CZ-104X	CER.CAPACITOR	0.1 16V
C803	NBE40JM-226X	TAN.CAPACITOR	22 6.3V
C804	NCF31CZ-104X	CER.CAPACITOR	0.1 16V
C805	NCB31HK-103X	CER.CAPACITOR	0.01 50V
C806	NCB31HK-103X	CER.CAPACITOR	0.01 50V
C807	NCB31HK-103X	CER.CAPACITOR	0.01 50V
C808	NCB31HK-103X	CER.CAPACITOR	0.01 50V
C809	NCB31HK-103X	CER.CAPACITOR	0.01 50V
C810	NCB31HK-103X	CER.CAPACITOR	0.01 50V
C811	NCB31HK-102X	CER.CAPACITOR	1000p 50V
C812	NCB31HK-103X	CER.CAPACITOR	0.01 50V
C813	NCB31HK-103X	CER.CAPACITOR	0.01 50V
C814	NBE41AM-226X	TAN.CAPACITOR	22 10V
C815	NCF31CZ-104X	CER.CAPACITOR	0.1 16V
C816	NCB31HK-103X	CER.CAPACITOR	0.01 50V
C817	NCF31CZ-104X	CER.CAPACITOR	0.1 16V
C819	NCF31CZ-104X	CER.CAPACITOR	0.1 16V
C820	NDC31HJ-271X	CER.CAPACITOR	270p 50V
C821	NDC31HJ-5R0X	CER.CAPACITOR	5p 50V
C822	NDC31HJ-6R0X	CER.CAPACITOR	6p 50V
L111	NQL23CM-330X	COIL	33uH
L112	NQL23CM-330X	COIL	33uH
L113	NQL044K-470X	COIL	47uH
L114	NQL23CM-330X	COIL	33uH
L115	NQL23CM-330X	COIL	33uH
L201	NQL114K-100X	COIL	10uH
L202	NQL114K-100X	COIL	10uH
L301	NQL044K-100X	COIL	10uH
L302	NQL044K-100X	COIL	10uH
L303	NQL044K-100X	COIL	10uH
L304	NQL024J-1R2X	COIL	1.2uH
L305	NQL044K-100X	COIL	10uH
L306	NQL044K-100X	COIL	10uH
L307	NQL044K-100X	COIL	10uH
L309	NQL044K-100X	COIL	10uH
L310	NQL044K-100X	COIL	10uH
L311	NQL044K-100X	COIL	10uH
L312	NQL044K-100X	COIL	10uH
L313	NQL044K-100X	COIL	10uH
L401	NQL044K-100X	COIL	10uH
L501	NQL044K-100X	COIL	10uH
L502	NQL044K-100X	COIL	10uH
L511	NQL114K-470X	COIL	47uH
L513	NQL044K-100X	COIL	10uH
L601	NQL044K-100X	COIL	10uH
L602	NQL024J-150X	COIL	15uH
L603	NQL044K-100X	COIL	10uH
L604	NQL044K-100X	COIL	10uH
L605	NQL044K-100X	COIL	10uH
L606	NQL024J-5R6X	COIL	5.6uH
L608	NQL044K-100X	COIL	10uH
L609	NQL044K-100X	COIL	10uH
L610	NQL044K-221X	COIL	220uH
L612	NQL044K-221X	COIL	220uH
L613	NQL044K-100X	COIL	10uH
L614	NQL044K-220X	COIL	22uH
L615	NQL044K-220X	COIL	22uH
L801	NQL044K-100X	COIL	10uH
L802	NQL044K-100X	COIL	10uH
L803	NQL044K-100X	COIL	10uH
L804	NQR0276-001X	COIL	

Symbol No.	Part No.	Part Name	Description
LC101	PGZ01972Z	LC FILTER	
LC102	PGZ01972Z	LC FILTER	
LC103	PGZ01972Z	LC FILTER	
LC104	PGZ01972Z	LC FILTER	
LC105	PGZ01972Z	LC FILTER	
LC301	PGZ01972Z	LC FILTER	
LC302	PGZ01972Z	LC FILTER	
LC303	PGZ01972Z	LC FILTER	
LC501	PGZ01972Z	LC FILTER	
LC502	PGZ01972Z	LC FILTER	
X101	NAX0349-001X	CRYSTAL	27MHz
X401	NAX0348-001X	CRYSTAL	27MHz
X601	NAX0227-001X	CRYSTAL	503kHz
X602	NAX0348-001X	CRYSTAL	27MHz
X603	NAX0280-001X	CRYSTAL	26.995MHz
X801	NAX0241-001X	CRYSTAL	24.576MHz
CN1	QGB0805L2-60X	CONNECTOR	60PIN
CN2	QGB0805L2-60X	CONNECTOR	60PIN
CN102	QGA1201C2-13X	CONNECTOR	13PIN
CN104	QGB0801L1-26X	CONNECTOR	26PIN
CN106	QGA1201F2-08X	CONNECTOR	8PIN
CN108	QGF0508F1-10X	CONNECTOR	10PIN
CN401	QGF0508F1-18X	CONNECTOR	18PIN
CN402	QGF0508F1-20X	CONNECTOR	20PIN
CN403	QGB0801L1-26X	CONNECTOR	26PIN
CN501	QGF0508F1-20X	CONNECTOR	20PIN
CN801	QGA1201F2-06X	CONNECTOR	6PIN
K101	PGZ00627Z	FERRATE BEADS	
K102	PGZ00627Z	FERRATE BEADS	
K301	NQR0269-004X	FERRITE BEADS	
K303	NQR0129-003X	FERRITE BEADS	
K401	PGZ00627Z	FERRATE BEADS	
K402	PGZ00627Z	FERRATE BEADS	
K403	PGZ00627Z	FERRATE BEADS	
K404	PGZ00627Z	FERRATE BEADS	
K601	PGZ00627Z	FERRATE BEADS	
K602	NQR0269-004X	FERRITE BEADS	
K603	NQR0269-004X	FERRITE BEADS	
K604	NQR0269-004X	FERRITE BEADS	
K605	NQR0269-004X	FERRITE BEADS	
K801	PGZ00627Z	FERRATE BEADS	
LA301	NQR0320-010X	F.B.ARRAY	
LA302	NQR0320-010X	F.B.ARRAY	
LA303	NQR0320-010X	F.B.ARRAY	
LA401	NQR0330-009X	EMI FILTER ARY	
LA402	NQR0330-009X	EMI FILTER ARY	
LA403	NQR0330-009X	EMI FILTER ARY	
LA404	NQR0330-009X	EMI FILTER ARY	
LA601	NQR0330-009X	EMI FILTER ARY	
LA602	NQR0330-009X	EMI FILTER ARY	
LA603	NQR0330-009X	EMI FILTER ARY	
LA604	NQR0330-009X	EMI FILTER ARY	
LA605	NQR0330-009X	EMI FILTER ARY	
LA606	NQR0320-010X	F.B.ARRAY	
LA607	NQR0320-010X	F.B.ARRAY	

6.6 ISB BOARD ASSEMBLY PARTS LIST [1][1]

SCK2604-02-00B [1][1]□□□□□□□

Symbol No.	Part No.	Part Name	Description	
SK501	QNV0027-010	IC SOCKET	20PIN	
IC503	CXA1439M-X	I.C.(M)	SONY	
IC504	AD8031ART-X	I.C.(M)	ANALOG DEVICES	
IC505	TC74VHC04FT-X	I.C.(M)	TOSHIBA	
IC506	LP2986IMM-X	I.C.(M)	NATIONAL SEMOCO	
Q501	2SC3930/BC/-X	TRANSISTOR	MATSUSHITA	
R501	NRSA63D-105X	M.G.RESISTOR	1M	1/16W
R502	NRSA63D-391X	M.G.RESISTOR	390	1/16W
R503	NRSA63D-184X	M.G.RESISTOR	180k	1/16W
R504	NRSA63D-273X	M.G.RESISTOR	27k	1/16W
R505	NRSA63D-682X	M.G.RESISTOR	6.8k	1/16W
R506	NRSA63D-101X	M.G.RESISTOR	100	1/16W
R507	NRSA63D-112X	M.G.RESISTOR	1.1k	1/16W
R508	NRSA63D-102X	M.G.RESISTOR	1k	1/16W
R509	NRSA63D-102X	M.G.RESISTOR	1k	1/16W
R510	NRSA63J-0R0X	M.G.RESISTOR	0	1/16W
R511	NRSA63D-180X	M.G.RESISTOR	18	1/16W
R512	NRSA63D-180X	M.G.RESISTOR	18	1/16W
R513	NRSA63D-180X	M.G.RESISTOR	18	1/16W
R514	NRSA63D-180X	M.G.RESISTOR	18	1/16W
R519	NRSA63D-334X	M.G.RESISTOR	330k	1/16W
R520	NRSA63D-154X	M.G.RESISTOR	150k	1/16W
R521	NRSA63J-225X	M.G.RESISTOR	2.2M	1/16W
R522	NRSA63D-563X	M.G.RESISTOR	56k	1/16W
R523	NRSA63J-564X	M.G.RESISTOR	560k	1/16W
C501	NCB31EK-473X	CER.CAPACITOR	0.047	25V
C504	NBE40GM-476X	TAN.CAPACITOR	47	4V
C505	NCB31EK-473X	CER.CAPACITOR	0.047	25V
C506	NBE21AM-225X	TAN.CAPACITOR	2.2	10V
C507	NBE41VM-335X	TAN.CAPACITOR	3.3	35V
C508	NCB31CK-473X	CER.CAPACITOR	0.047	16V
C509	NCB31CK-473X	CER.CAPACITOR	0.047	16V
C510	NCB31CK-473X	CER.CAPACITOR	0.047	16V
C511	NCB31CK-473X	CER.CAPACITOR	0.047	16V
C512	NBE21CM-475X	TAN.CAPACITOR	4.7	16V
C513	NCB31CK-473X	CER.CAPACITOR	0.047	16V
C514	NBE21CM-475X	TAN.CAPACITOR	4.7	16V
C515	NBE21CM-475X	TAN.CAPACITOR	4.7	16V
C518	NCB11CK-105X	CER.CAPACITOR	1	16V
C519	NCB11CK-105X	CER.CAPACITOR	1	16V
C520	NCB31CK-473X	CER.CAPACITOR	0.047	16V
C521	NCB31CK-473X	CER.CAPACITOR	0.047	16V
C522	NCB31CK-473X	CER.CAPACITOR	0.047	16V
C523	NDC31HJ-220X	CER.CAPACITOR	22p	50V
C524	NBE21AM-106X	TAN.CAPACITOR	10	10V
C525	NBE21AM-106X	TAN.CAPACITOR	10	10V
LC501	SCV1804-222Z	LC FILTER		
CN11	QGF0508F2-20X	CONNECTOR	20PIN	

6.7 ISG BOARD ASSEMBLY PARTS LIST [1][2]

SCK2604-03-00B [1][2]□□□□□□□

Symbol No.	Part No.	Part Name	Description	
SK501	QNV0027-010	IC SOCKET	20PIN	
IC503	CXA1439M-X	I.C.(M)	SONY	
IC504	AD8031ART-X	I.C.(M)	ANALOG DEVICES	
IC505	TC74VHC04FT-X	I.C.(M)	TOSHIBA	
IC506	LP2986IMM-X	I.C.(M)	NATIONAL SEMICO	
Q501	2SC3930/BC/-X	TRANSISTOR	MATSUSHITA	
R501	NRSA63D-105X	M.G.RESISTOR	1M	1/16W
R502	NRSA63D-391X	M.G.RESISTOR	390	1/16W
R503	NRSA63D-184X	M.G.RESISTOR	180k	1/16W
R504	NRSA63D-273X	M.G.RESISTOR	27k	1/16W
R505	NRSA63D-682X	M.G.RESISTOR	6.8k	1/16W
R506	NRSA63D-101X	M.G.RESISTOR	100	1/16W
R507	NRSA63D-112X	M.G.RESISTOR	1.1k	1/16W
R508	NRSA63D-102X	M.G.RESISTOR	1k	1/16W
R509	NRSA63D-102X	M.G.RESISTOR	1k	1/16W
R510	NRSA63J-0R0X	M.G.RESISTOR	0	1/16W
R511	NRSA63D-180X	M.G.RESISTOR	18	1/16W
R512	NRSA63D-180X	M.G.RESISTOR	18	1/16W
R513	NRSA63D-180X	M.G.RESISTOR	18	1/16W
R514	NRSA63D-180X	M.G.RESISTOR	18	1/16W
R519	NRSA63D-334X	M.G.RESISTOR	330k	1/16W
R520	NRSA63D-154X	M.G.RESISTOR	150k	1/16W
R521	NRSA63J-225X	M.G.RESISTOR	2.2M	1/16W
R522	NRSA63D-563X	M.G.RESISTOR	56k	1/16W
R523	NRSA63J-564X	M.G.RESISTOR	560k	1/16W
C501	NCB31EK-473X	CER.CAPACITOR	0.047	25V
C504	NBE40GM-476X	TAN.CAPACITOR	47	4V
C505	NCB31EK-473X	CER.CAPACITOR	0.047	25V
C506	NBE21AM-225X	TAN.CAPACITOR	2.2	10V
C507	NBE41VM-335X	TAN.CAPACITOR	3.3	35V
C508	NCB31CK-473X	CER.CAPACITOR	0.047	16V
C509	NCB31CK-473X	CER.CAPACITOR	0.047	16V
C510	NCB31CK-473X	CER.CAPACITOR	0.047	16V
C511	NCB31CK-473X	CER.CAPACITOR	0.047	16V
C512	NBE21CM-475X	TAN.CAPACITOR	4.7	16V
C513	NCB31CK-473X	CER.CAPACITOR	0.047	16V
C514	NBE21CM-475X	TAN.CAPACITOR	4.7	16V
C515	NBE21CM-475X	TAN.CAPACITOR	4.7	16V
C518	NCB11CK-105X	CER.CAPACITOR	1	16V
C519	NCB11CK-105X	CER.CAPACITOR	1	16V
C520	NCB31CK-473X	CER.CAPACITOR	0.047	16V
C521	NCB31CK-473X	CER.CAPACITOR	0.047	16V
C522	NCB31CK-473X	CER.CAPACITOR	0.047	16V
C523	NDC31HJ-220X	CER.CAPACITOR	22p	50V
C524	NBE21AM-106X	TAN.CAPACITOR	10	10V
C525	NBE21AM-106X	TAN.CAPACITOR	10	10V
LC501	SCV1804-222Z	LC FILTER		
CN12	QGF0508F1-20X	CONNECTOR	20PIN	

6.8 ISR BOARD ASSEMBLY PARTS LIST [1][3]

SCK2604-04-00B [1][3]□□□□□□□

Symbol No.	Part No.	Part Name	Description	
SK501	QNV0027-010	IC SOCKET	20PIN	
IC503	CXA1439M-X	I.C.(M)	SONY	
IC504	AD8031ART-X	I.C.(M)	ANALOG DEVICES	
IC505	TC74VHC04FT-X	I.C.(M)	TOSHIBA	
IC506	LP2986IMM-X	I.C.(M)	NATIONAL SEMICO	
Q501	2SC3930/BC/-X	TRANSISTOR	MATSUSHITA	
R501	NRSA63D-105X	M.G.RESISTOR	1M	1/16W
R502	NRSA63D-391X	M.G.RESISTOR	390	1/16W
R503	NRSA63D-184X	M.G.RESISTOR	180k	1/16W
R504	NRSA63D-273X	M.G.RESISTOR	27k	1/16W
R505	NRSA63D-682X	M.G.RESISTOR	6.8k	1/16W
R506	NRSA63D-101X	M.G.RESISTOR	100	1/16W
R507	NRSA63D-112X	M.G.RESISTOR	1.1k	1/16W
R508	NRSA63D-102X	M.G.RESISTOR	1k	1/16W
R509	NRSA63D-102X	M.G.RESISTOR	1k	1/16W
R510	NRSA63J-0R0X	M.G.RESISTOR	0	1/16W
R511	NRSA63D-180X	M.G.RESISTOR	18	1/16W
R512	NRSA63D-180X	M.G.RESISTOR	18	1/16W
R513	NRSA63D-180X	M.G.RESISTOR	18	1/16W
R514	NRSA63D-180X	M.G.RESISTOR	18	1/16W
R519	NRSA63D-334X	M.G.RESISTOR	330k	1/16W
R520	NRSA63D-154X	M.G.RESISTOR	150k	1/16W
R521	NRSA63J-225X	M.G.RESISTOR	2.2M	1/16W
R522	NRSA63D-563X	M.G.RESISTOR	56k	1/16W
R523	NRSA63J-564X	M.G.RESISTOR	560k	1/16W
C501	NCB31EK-473X	CER.CAPACITOR	0.047	25V
C504	NBE40GM-476X	TAN.CAPACITOR	47	4V
C505	NCB31EK-473X	CER.CAPACITOR	0.047	25V
C506	NBE21AM-225X	TAN.CAPACITOR	2.2	10V
C507	NBE41VM-335X	TAN.CAPACITOR	3.3	35V
C508	NCB31CK-473X	CER.CAPACITOR	0.047	16V
C509	NCB31CK-473X	CER.CAPACITOR	0.047	16V
C510	NCB31CK-473X	CER.CAPACITOR	0.047	16V
C511	NCB31CK-473X	CER.CAPACITOR	0.047	16V
C512	NBE21CM-475X	TAN.CAPACITOR	4.7	16V
C513	NCB31CK-473X	CER.CAPACITOR	0.047	16V
C514	NBE21CM-475X	TAN.CAPACITOR	4.7	16V
C515	NBE21CM-475X	TAN.CAPACITOR	4.7	16V
C518	NCB11CK-105X	CER.CAPACITOR	1	16V
C519	NCB11CK-105X	CER.CAPACITOR	1	16V
C520	NCB31CK-473X	CER.CAPACITOR	0.047	16V
C521	NCB31CK-473X	CER.CAPACITOR	0.047	16V
C522	NCB31CK-473X	CER.CAPACITOR	0.047	16V
C523	NDC31HJ-220X	CER.CAPACITOR	22p	50V
C524	NBE21AM-106X	TAN.CAPACITOR	10	10V
C525	NBE21AM-106X	TAN.CAPACITOR	10	10V
LC501	SCV1804-222Z	LC FILTER		
CN13	QGF0508F1-20X	CONNECTOR	20PIN	

6.9 TG BOARD ASSEMBLY PARTS LIST [1][4]

SCK2604-01-N0B(U)

SCK2604-01-P0B(E) [1][4]□□□□□□□

Symbol No.	Part No.	Part Name	Description	
IC1	CXD1265R	I.C.(M)	SONY	
IC2	MN3112SA-X	I.C.(M)	MATSUSHITA	
IC3	MN3112SA-X	I.C.(M)	MATSUSHITA	
IC4	MN3112SA-X	I.C.(M)	MATSUSHITA	
IC5	NJM78L15UA-X	I.C.(M)	JRC	
IC6	TC74VHC08FT-X	I.C.(M)	TOSHIBA	
IC7	TC74VHC08FT-X	I.C.(M)	TOSHIBA	
IC8	TC7SH04FU-X	I.C.(M)	TOSHIBA	
IC9	TC74VHC74FT-X	I.C.(M)	TOSHIBA	
IC10	TC7SH00FU-X	I.C.(M)	TOSHIBA	
IC11	TC7SH04FU-X	I.C.(M)	TOSHIBA	
IC14	BU4094BCFV-X	I.C.(M)	ROHM	
IC15	TC74VHC74FT-X	I.C.(M)	TOSHIBA	
Q1	2SB1219/QR/-X	TRANSISTOR	MATSUSHITA	
D1	MA142A-X	DIODE	MATSUSHITA	
D2	MA142A-X	DIODE	MATSUSHITA	
D3	MA142A-X	DIODE	MATSUSHITA	
D4	MA142A-X	DIODE	MATSUSHITA	
R1	NRSA63J-0R0X	M.G.RESISTOR	0	1/16W (E)
R2	NRSA63D-223X	M.G.RESISTOR	22k	1/16W
R3	NRSA63D-104X	M.G.RESISTOR	100k	1/16W
R4	NRSA63D-821X	M.G.RESISTOR	820	1/16W
R5	NRSA63D-104X	M.G.RESISTOR	100k	1/16W
R6	NRSA63D-821X	M.G.RESISTOR	820	1/16W
R7	NRSA63D-104X	M.G.RESISTOR	100k	1/16W
R8	NRSA63D-821X	M.G.RESISTOR	820	1/16W
R10	NRSA63D-472X	M.G.RESISTOR	4.7k	1/16W
R11	NRSA63D-332X	M.G.RESISTOR	3.3k	1/16W
R12	NRSA63D-223X	M.G.RESISTOR	22k	1/16W
R13	NRSA63J-0R0X	M.G.RESISTOR	0	1/16W
R14	NRSA63J-0R0X	M.G.RESISTOR	0	1/16W
R16	NRSA63J-0R0X	M.G.RESISTOR	0	1/16W
R17	NRSA63J-0R0X	M.G.RESISTOR	0	1/16W
R18	NRSA63J-0R0X	M.G.RESISTOR	0	1/16W
C1	NDC31HJ-221X	CER.CAPACITOR	220p	50V
C2	NDC31HJ-221X	CER.CAPACITOR	220p	50V
C3	NCB31CK-473X	CER.CAPACITOR	0.047	16V
C4	NCB11CK-105X	CER.CAPACITOR	1	16V
C5	NCB11CK-105X	CER.CAPACITOR	1	16V
C6	NCB11CK-105X	CER.CAPACITOR	1	16V
C10	NBE41VM-105X	TAN.CAPACITOR	1	35V
C11	NBE41VM-105X	TAN.CAPACITOR	1	35V
C12	NBE41VM-105X	TAN.CAPACITOR	1	35V
C13	NBSH1AM-227X	TAN.CAPACITOR	220	10V
C18	NBSH1AM-227X	TAN.CAPACITOR	220	10V
C20	NBE41CM-106X	TAN.CAPACITOR	10	16V
C21	NBE21CM-105X	TAN.CAPACITOR	1	16V
C22	NBE41VM-335X	TAN.CAPACITOR	3.3	35V
C23	NBE51EM-106X	TAN.CAPACITOR	10	25V
C24	NBE21CM-105X	TAN.CAPACITOR	1	16V
C25	NBE41VM-335X	TAN.CAPACITOR	3.3	35V
C26	NBE51EM-106X	TAN.CAPACITOR	10	25V
C27	NBE21CM-105X	TAN.CAPACITOR	1	16V
C28	NBE41VM-335X	TAN.CAPACITOR	3.3	35V
C29	NBE51EM-106X	TAN.CAPACITOR	10	25V
C30	NBE41VM-335X	TAN.CAPACITOR	3.3	35V
C31	NBE41VM-335X	TAN.CAPACITOR	3.3	35V
C32	NBE51VM-475X	TAN.CAPACITOR	4.7	35V
C33	NBE51CM-336X	TAN.CAPACITOR	33	16V
C34	NBE71CM-476X	TAN.CAPACITOR	47	16V
C35	NCB31EK-473X	CER.CAPACITOR	0.047	25V
C36	NCB21HK-473X	CER.CAPACITOR	0.047	50V
C37	NCB31EK-473X	CER.CAPACITOR	0.047	25V
C38	NCB31EK-473X	CER.CAPACITOR	0.047	25V
C39	NCB31EK-473X	CER.CAPACITOR	0.047	25V
C40	NCB31CK-473X	CER.CAPACITOR	0.047	16V
C41	NCB31CK-473X	CER.CAPACITOR	0.047	16V

6.10 CAM1 BOARD ASSEMBLY PARTS LIST [1][5]

SCK2605-01-N1B(U)

SCK2605-01-P1B(E) [1][5]□□□□□□

[TG]

Symbol No.	Part No.	Part Name	Description
C42	NCB31CK-473X	CER.CAPACITOR	0.047 16V
C43	NCB31CK-473X	CER.CAPACITOR	0.047 16V
C44	NCB31CK-473X	CER.CAPACITOR	0.047 16V
C45	NCB31CK-473X	CER.CAPACITOR	0.047 16V
C46	NCB31CK-473X	CER.CAPACITOR	0.047 16V
C47	NCB31CK-473X	CER.CAPACITOR	0.047 16V
C48	NCB31CK-473X	CER.CAPACITOR	0.047 16V
C49	NCB31CK-473X	CER.CAPACITOR	0.047 16V
C50	NCB31CK-473X	CER.CAPACITOR	0.047 16V
C51	NCB31CK-473X	CER.CAPACITOR	0.047 16V
C52	NCB31CK-473X	CER.CAPACITOR	0.047 16V
C53	NCB31CK-473X	CER.CAPACITOR	0.047 16V
C54	NCB31CK-473X	CER.CAPACITOR	0.047 16V
C55	NCB31CK-473X	CER.CAPACITOR	0.047 16V
C56	NCB31CK-473X	CER.CAPACITOR	0.047 16V
LC1	SCV1804-222Z	LC FILTER	
LC2	SCV1804-222Z	LC FILTER	
CN11	QGF0508C1-20W	CONNECTOR	20PIN
CN12	QGF0508C1-20W	CONNECTOR	20PIN
CN13	QGF0508C1-20W	CONNECTOR	20PIN
CN14	QGF0508F1-24X	CONNECTOR	24PIN
K1	SCV2732-1LL680	FERRITE BEADS	
K2	SCV2732-1LL680	FERRITE BEADS	
K3	NRSA63D-100X	M.G.RESISTOR	10 1/16W
K4	NRSA63D-100X	M.G.RESISTOR	10 1/16W
K5	SCV2732-1HS121	FERRITE BEADS	
K6	SCV2732-1HS121	FERRITE BEADS	
K7	SCV2732-1HS121	FERRITE BEADS	
K8	SCV2732-1HS601	FERRITE BEADS	

Symbol No.	Part No.	Part Name	Description
IC61	TLC2932IPW-X	I.C.(M)	TEXAS
IC62	TC74HC40103AF-X	I.C.(M)	TOSHIBA
IC63	TC74HC40103AF-X	I.C.(M)	TOSHIBA
IC64	TC7W74FU-X	I.C.(M)	TOSHIBA
IC65	TC7SH04FU-X	I.C.(M)	TOSHIBA
IC66	TC7SH04FU-X	I.C.(M)	TOSHIBA
IC412	AD8031ART-X	I.C.(M)	ANALOG DEVICES
IC413	AD603AR-X	I.C.(M)	ANALOG DEVICES
IC415	AD8031ART-X	I.C.(M)	ANALOG DEVICES
IC421	LMC6082IM-X	I.C.(M)	NATIONAL SEMICO
IC422	TC7W66FU-X	I.C.(M)	TOSHIBA
IC424	NJM062V-X	I.C.(M)	JRC
IC425	TC7S66FU-X	I.C.(M)	TOSHIBA
IC429	NJM062V-X	I.C.(M)	JRC
IC511	TC74HC4053AFT-X	I.C.(M)	TOSHIBA
IC512	AD8031ART-X	I.C.(M)	ANALOG DEVICES
IC513	AD603AR-X	I.C.(M)	ANALOG DEVICES
IC514	TC74HC4053AFT-X	I.C.(M)	TOSHIBA
IC515	AD8031ART-X	I.C.(M)	ANALOG DEVICES
IC516	TC74HC4053AFT-X	I.C.(M)	TOSHIBA
IC521	LMC6082IM-X	I.C.(M)	NATIONAL SEMICO
IC522	TC7W66FU-X	I.C.(M)	TOSHIBA
IC524	NJM062V-X	I.C.(M)	JRC
IC525	TC7S66FU-X	I.C.(M)	TOSHIBA
IC526	MB88345PF	I.C.(M)	FUJITSU
IC527	TC7W74FU-X	I.C.(M)	TOSHIBA
IC528	LMC6082IM-X	I.C.(M)	NATIONAL SEMICO
IC529	NJM062V-X	I.C.(M)	JRC
IC531	TC7SH08FU-X	I.C.(M)	TOSHIBA
IC532	LP2986IMM-X	I.C.(M)	NATIONAL SEMICO
IC612	AD8031ART-X	I.C.(M)	ANALOG DEVICES
IC613	AD603AR-X	I.C.(M)	ANALOG DEVICES
IC615	AD8031ART-X	I.C.(M)	ANALOG DEVICES
IC621	LMC6082IM-X	I.C.(M)	NATIONAL SEMICO
IC622	TC7W66FU-X	I.C.(M)	TOSHIBA
IC624	NJM062V-X	I.C.(M)	JRC
IC625	TC7S66FU-X	I.C.(M)	TOSHIBA
IC629	NJM062V-X	I.C.(M)	JRC
IC901	MB90T678BPF	I.C.(M)	FUJITSU
IC903	CY62256LL70SN-X	I.C.(M)	CYPRESS
IC904	TC74VHC373FT-X	I.C.(M)	TOSHIBA
IC905	NM93C86AEM8-X	I.C.(M)	NATIONAL SEMICO
IC906	MN12821-QR-X	I.C.(M)	MATSUSHITA
IC907	TC7SH04FU-X	I.C.(M)	TOSHIBA
IC908	TC7SH04FU-X	I.C.(M)	TOSHIBA
IC909	SN74LV125APW-X	I.C.(M)	TEXAS
IC910	LP2986IMM-X	I.C.(M)	NATIONAL SEMICO
IC911	TC7SH04FU-X	I.C.(M)	TOSHIBA
IC912	TC7SH08FU-X	I.C.(M)	TOSHIBA
Q411	2SC4626/BC/-X	TRANSISTOR	MATSUSHITA
Q412	2SA1790/BC/-X	TRANSISTOR	MATSUSHITA
Q511	2SC4626/BC/-X	TRANSISTOR	MATSUSHITA
Q512	2SA1790/BC/-X	TRANSISTOR	MATSUSHITA
Q513	2SC4626/BC/-X	TRANSISTOR	MATSUSHITA
Q514	DTA124EUA-X	TRANSISTOR	ROHM
Q515	2SA1790/BC/-X	TRANSISTOR	MATSUSHITA
Q516	2SC4626/BC/-X	TRANSISTOR	MATSUSHITA
Q517	2SA1790/BC/-X	TRANSISTOR	MATSUSHITA
Q611	2SC4626/BC/-X	TRANSISTOR	MATSUSHITA
Q612	2SA1790/BC/-X	TRANSISTOR	MATSUSHITA
D402	MA742-X	DIODE	MATSUSHITA
D502	MA742-X	DIODE	MATSUSHITA
D602	MA742-X	DIODE	MATSUSHITA
D901	MA143A-X	DIODE	MATSUSHITA
D902	MA143A-X	DIODE	MATSUSHITA
R61	NRSA63D-272X	M.G.RESISTOR	2.7k 1/16W
R62	NRSA63J-0R0X	M.G.RESISTOR	0 1/16W
R63	NRSA63D-563X	M.G.RESISTOR	56k 1/16W
R64	NRSA63D-561X	M.G.RESISTOR	560 1/16W

Symbol No.	Part No.	Part Name	Description
R66	NRSA63J-0R0X	M.G.RESISTOR	0 1/16W (U)
R67	NRSA63J-0R0X	M.G.RESISTOR	0 1/16W (E)
R68	NRSA63J-0R0X	M.G.RESISTOR	0 1/16W (E)
R69	NRSA63J-0R0X	M.G.RESISTOR	0 1/16W (U)
R70	NRSA63J-0R0X	M.G.RESISTOR	0 1/16W (U)
R71	NRSA63J-0R0X	M.G.RESISTOR	0 1/16W (E)
R72	NRSA63J-0R0X	M.G.RESISTOR	0 1/16W (U)
R73	NRSA63J-0R0X	M.G.RESISTOR	0 1/16W (E)
R74	NRSA63J-0R0X	M.G.RESISTOR	0 1/16W (E)
R75	NRSA63J-0R0X	M.G.RESISTOR	0 1/16W (U)
R76	NRSA63J-0R0X	M.G.RESISTOR	0 1/16W (U)
R77	NRSA63J-0R0X	M.G.RESISTOR	0 1/16W (E)
R78	NRSA63J-0R0X	M.G.RESISTOR	0 1/16W (U)
R79	NRSA63J-0R0X	M.G.RESISTOR	0 1/16W (E)
R80	NRSA63J-0R0X	M.G.RESISTOR	0 1/16W (E)
R81	NRSA63J-0R0X	M.G.RESISTOR	0 1/16W (U)
R431	NRSA63D-102X	M.G.RESISTOR	1k 1/16W
R432	NRSA63D-331X	M.G.RESISTOR	330 1/16W
R433	NRSA63D-331X	M.G.RESISTOR	330 1/16W
R434	NRSA63D-331X	M.G.RESISTOR	330 1/16W
R435	NRSA63D-102X	M.G.RESISTOR	1k 1/16W
R436	NRSA63D-102X	M.G.RESISTOR	1k 1/16W
R437	NRSA63D-102X	M.G.RESISTOR	1k 1/16W
R438	NRSA63D-102X	M.G.RESISTOR	1k 1/16W
R441	NRSA63J-0R0X	M.G.RESISTOR	0 1/16W
R442	NRSA63D-182X	M.G.RESISTOR	1.8k 1/16W
R443	NRSA63D-101X	M.G.RESISTOR	100 1/16W
R444	NRSA63D-681X	M.G.RESISTOR	680 1/16W
R445	NRSA63D-102X	M.G.RESISTOR	1k 1/16W
R446	NRSA63D-102X	M.G.RESISTOR	1k 1/16W
R447	NRSA63D-112X	M.G.RESISTOR	1.1k 1/16W
R448	NRSA63D-221X	M.G.RESISTOR	220 1/16W
R449	NRSA63D-121X	M.G.RESISTOR	120 1/16W
R450	NRSA63D-392X	M.G.RESISTOR	3.9k 1/16W
R457	NRSA63D-911X	M.G.RESISTOR	910 1/16W
R458	NRSA63D-103X	M.G.RESISTOR	10k 1/16W
R461	NRSA63D-473X	M.G.RESISTOR	47k 1/16W
R462	NRSA63D-473X	M.G.RESISTOR	47k 1/16W
R463	NRSA63D-102X	M.G.RESISTOR	1k 1/16W
R464	NRSA63D-473X	M.G.RESISTOR	47k 1/16W
R465	NRSA63D-113X	M.G.RESISTOR	11k 1/16W
R466	NRSA63D-183X	M.G.RESISTOR	18k 1/16W
R467	NRSA63D-183X	M.G.RESISTOR	18k 1/16W
R468	NRSA63D-183X	M.G.RESISTOR	18k 1/16W
R469	NRSA63D-123X	M.G.RESISTOR	12k 1/16W
R470	NRSA63D-123X	M.G.RESISTOR	12k 1/16W
R471	NRSA63D-113X	M.G.RESISTOR	11k 1/16W
R484	NRSA63D-183X	M.G.RESISTOR	18k 1/16W
R485	NRSA63D-363X	M.G.RESISTOR	36k 1/16W
R486	NRSA63D-184X	M.G.RESISTOR	180k 1/16W (U)
	NRSA63D-224X	M.G.RESISTOR	220k 1/16W (E)
R487	NRSA63D-104X	M.G.RESISTOR	100k 1/16W
R488	NRSA63D-104X	M.G.RESISTOR	100k 1/16W
R489	NRSA63D-102X	M.G.RESISTOR	1k 1/16W
R490	NRSA63D-821X	M.G.RESISTOR	820 1/16W
R491	NRSA63D-821X	M.G.RESISTOR	820 1/16W
R492	NRSA63D-562X	M.G.RESISTOR	5.6k 1/16W
R493	NRSA63D-752X	M.G.RESISTOR	7.5k 1/16W
R494	NRSA63D-243X	M.G.RESISTOR	24k 1/16W
R495	NRSA63D-103X	M.G.RESISTOR	10k 1/16W
R496	NRSA63D-392X	M.G.RESISTOR	3.9k 1/16W
R497	NRSA63D-823X	M.G.RESISTOR	82k 1/16W
R498	NRSA63D-102X	M.G.RESISTOR	1k 1/16W
R499	NRSA63D-101X	M.G.RESISTOR	100 1/16W
R531	NRSA63D-102X	M.G.RESISTOR	1k 1/16W
R532	NRSA63D-331X	M.G.RESISTOR	330 1/16W
R533	NRSA63D-331X	M.G.RESISTOR	330 1/16W
R534	NRSA63D-331X	M.G.RESISTOR	330 1/16W
R535	NRSA63D-102X	M.G.RESISTOR	1k 1/16W
R536	NRSA63D-102X	M.G.RESISTOR	1k 1/16W
R537	NRSA63D-102X	M.G.RESISTOR	1k 1/16W
R538	NRSA63D-102X	M.G.RESISTOR	1k 1/16W
R541	NRSA63J-0R0X	M.G.RESISTOR	0 1/16W

Symbol No.	Part No.	Part Name	Description
R542	NRSA63D-391X	M.G.RESISTOR	390 1/16W
R543	NRSA63D-101X	M.G.RESISTOR	100 1/16W
R544	NRSA63D-681X	M.G.RESISTOR	680 1/16W
R545	NRSA63D-102X	M.G.RESISTOR	1k 1/16W
R546	NRSA63D-102X	M.G.RESISTOR	1k 1/16W
R547	NRSA63D-112X	M.G.RESISTOR	1.1k 1/16W
R548	NRSA63D-221X	M.G.RESISTOR	220 1/16W
R549	NRSA63D-121X	M.G.RESISTOR	120 1/16W
R550	NRSA63D-392X	M.G.RESISTOR	3.9k 1/16W
R551	NRSA63D-334X	M.G.RESISTOR	330k 1/16W
R552	NRSA63D-224X	M.G.RESISTOR	220k 1/16W
R553	NRSA63J-225X	M.G.RESISTOR	2.2M 1/16W
R554	NRSA63D-563X	M.G.RESISTOR	56k 1/16W
R555	NRSA63J-564X	M.G.RESISTOR	560k 1/16W
R557	NRSA63D-911X	M.G.RESISTOR	910 1/16W
R558	NRSA63D-103X	M.G.RESISTOR	10k 1/16W
R559	NRSA63D-102X	M.G.RESISTOR	1k 1/16W
R560	NRSA63D-104X	M.G.RESISTOR	100k 1/16W
R561	NRSA63D-473X	M.G.RESISTOR	47k 1/16W
R562	NRSA63D-473X	M.G.RESISTOR	47k 1/16W
R563	NRSA63D-102X	M.G.RESISTOR	1k 1/16W
R564	NRSA63D-473X	M.G.RESISTOR	47k 1/16W
R565	NRSA63D-113X	M.G.RESISTOR	11k 1/16W
R567	NRSA63D-183X	M.G.RESISTOR	18k 1/16W
R568	NRSA63D-183X	M.G.RESISTOR	18k 1/16W
R569	NRSA63D-183X	M.G.RESISTOR	18k 1/16W
R570	NRSA63D-183X	M.G.RESISTOR	18k 1/16W
R571	NRSA63D-113X	M.G.RESISTOR	11k 1/16W
R573	NRSA63D-222X	M.G.RESISTOR	2.2k 1/16W
R574	NRSA63D-394X	M.G.RESISTOR	390k 1/16W (U)
	NRSA63J-394X	M.G.RESISTOR	390k 1/16W (E)
R575	NRSA63D-122X	M.G.RESISTOR	1.2k 1/16W
R576	NRSA63D-224X	M.G.RESISTOR	220k 1/16W
R577	NRSA63D-332X	M.G.RESISTOR	3.3k 1/16W
R578	NRSA63D-183X	M.G.RESISTOR	18k 1/16W
R579	NRSA63D-363X	M.G.RESISTOR	36k 1/16W
R580	NRSA63D-682X	M.G.RESISTOR	6.8k 1/16W
R581	NRSA63D-103X	M.G.RESISTOR	10k 1/16W
R582	NRSA63D-682X	M.G.RESISTOR	6.8k 1/16W
R583	NRSA63D-823X	M.G.RESISTOR	82k 1/16W
R584	NRSA63D-183X	M.G.RESISTOR	18k 1/16W
R585	NRSA63D-363X	M.G.RESISTOR	36k 1/16W
R586	NRSA63D-184X	M.G.RESISTOR	180k 1/16W (U)
	NRSA63D-224X	M.G.RESISTOR	220k 1/16W (E)
R587	NRSA63D-104X	M.G.RESISTOR	100k 1/16W
R588	NRSA63D-104X	M.G.RESISTOR	100k 1/16W
R589	NRSA63D-102X	M.G.RESISTOR	1k 1/16W
R590	NRSA63D-821X	M.G.RESISTOR	820 1/16W
R591	NRSA63D-821X	M.G.RESISTOR	820 1/16W
R592	NRSA63D-562X	M.G.RESISTOR	5.6k 1/16W
R593	NRSA63D-752X	M.G.RESISTOR	7.5k 1/16W
R594	NRSA63D-393X	M.G.RESISTOR	39k 1/16W
R596	NRSA63D-752X	M.G.RESISTOR	7.5k 1/16W
R597	NRSA63D-154X	M.G.RESISTOR	150k 1/16W
R598	NRSA63D-102X	M.G.RESISTOR	1k 1/16W
R599	NRSA63D-101X	M.G.RESISTOR	100 1/16W
R631	NRSA63D-102X	M.G.RESISTOR	1k 1/16W
R632	NRSA63D-331X	M.G.RESISTOR	330 1/16W
R633	NRSA63D-331X	M.G.RESISTOR	330 1/16W
R634	NRSA63D-331X	M.G.RESISTOR	330 1/16W
R635	NRSA63D-102X	M.G.RESISTOR	1k 1/16W
R636	NRSA63D-102X	M.G.RESISTOR	1k 1/16W
R637	NRSA63D-102X	M.G.RESISTOR	1k 1/16W
R638	NRSA63D-102X	M.G.RESISTOR	1k 1/16W
R641	NRSA63J-0R0X	M.G.RESISTOR	0 1/16W
R642	NRSA63D-471X	M.G.RESISTOR	470 1/16W
R643	NRSA63D-101X	M.G.RESISTOR	100 1/16W
R644	NRSA63D-681X	M.G.RESISTOR	680 1/16W
R645	NRSA63D-102X	M.G.RESISTOR	1k 1/16W
R646	NRSA63D-102X	M.G.RESISTOR	1k 1/16W
R647	NRSA63D-112X	M.G.RESISTOR	1.1k 1/16W
R648	NRSA63D-221X	M.G.RESISTOR	220 1/16W
R649	NRSA63D-121X	M.G.RESISTOR	120 1/16W

[CAM1]

Symbol No.	Part No.	Part Name	Description	
R650	NRSA63D-392X	M.G.RESISTOR	3.9k	1/16W
R657	NRSA63D-911X	M.G.RESISTOR	910	1/16W
R658	NRSA63D-103X	M.G.RESISTOR	10k	1/16W
R661	NRSA63D-473X	M.G.RESISTOR	47k	1/16W
R662	NRSA63D-473X	M.G.RESISTOR	47k	1/16W
R663	NRSA63D-102X	M.G.RESISTOR	1k	1/16W
R664	NRSA63D-473X	M.G.RESISTOR	47k	1/16W
R665	NRSA63D-113X	M.G.RESISTOR	11k	1/16W
R666	NRSA63D-183X	M.G.RESISTOR	18k	1/16W
R667	NRSA63D-183X	M.G.RESISTOR	18k	1/16W
R668	NRSA63D-183X	M.G.RESISTOR	18k	1/16W
R669	NRSA63D-123X	M.G.RESISTOR	12k	1/16W
R670	NRSA63D-123X	M.G.RESISTOR	12k	1/16W
R671	NRSA63D-113X	M.G.RESISTOR	11k	1/16W
R678	NRSA63D-102X	M.G.RESISTOR	1k	1/16W
R684	NRSA63D-183X	M.G.RESISTOR	18k	1/16W
R685	NRSA63D-363X	M.G.RESISTOR	36k	1/16W
R686	NRSA63D-184X	M.G.RESISTOR	180k	1/16W (U)
	NRSA63D-224X	M.G.RESISTOR	220k	1/16W (E)
R687	NRSA63D-104X	M.G.RESISTOR	100k	1/16W
R688	NRSA63D-104X	M.G.RESISTOR	100k	1/16W
R689	NRSA63D-102X	M.G.RESISTOR	1k	1/16W
R690	NRSA63D-821X	M.G.RESISTOR	820	1/16W
R691	NRSA63D-821X	M.G.RESISTOR	820	1/16W
R692	NRSA63D-562X	M.G.RESISTOR	5.6k	1/16W
R693	NRSA63D-752X	M.G.RESISTOR	7.5k	1/16W
R694	NRSA63D-183X	M.G.RESISTOR	18k	1/16W
R695	NRSA63D-183X	M.G.RESISTOR	18k	1/16W
R696	NRSA63D-103X	M.G.RESISTOR	10k	1/16W
R697	NRSA63D-103X	M.G.RESISTOR	10k	1/16W
R698	NRSA63D-102X	M.G.RESISTOR	1k	1/16W
R699	NRSA63D-101X	M.G.RESISTOR	100	1/16W
R901	NRSA63D-223X	M.G.RESISTOR	22k	1/16W
R902	NRSA63D-223X	M.G.RESISTOR	22k	1/16W
R903	NRSA63D-223X	M.G.RESISTOR	22k	1/16W
R904	NRSA63D-223X	M.G.RESISTOR	22k	1/16W
R905	NRSA63D-223X	M.G.RESISTOR	22k	1/16W
R906	NRSA63D-223X	M.G.RESISTOR	22k	1/16W
R907	NRSA63D-223X	M.G.RESISTOR	22k	1/16W
R908	NRSA63D-223X	M.G.RESISTOR	22k	1/16W
R909	NRSA63D-223X	M.G.RESISTOR	22k	1/16W
R910	NRSA63D-223X	M.G.RESISTOR	22k	1/16W
R911	NRSA63D-223X	M.G.RESISTOR	22k	1/16W
R912	NRSA63D-332X	M.G.RESISTOR	3.3k	1/16W
R913	NRSA63D-102X	M.G.RESISTOR	1k	1/16W
R914	NRSA63D-102X	M.G.RESISTOR	1k	1/16W
R915	NRSA63J-105X	M.G.RESISTOR	1M	1/16W
R916	NRSA63D-103X	M.G.RESISTOR	10k	1/16W
R917	NRSA63D-103X	M.G.RESISTOR	10k	1/16W
R918	NRSA63D-103X	M.G.RESISTOR	10k	1/16W
R919	NRSA63D-103X	M.G.RESISTOR	10k	1/16W
R920	NRSA63D-223X	M.G.RESISTOR	22k	1/16W
R921	NRSA63D-103X	M.G.RESISTOR	10k	1/16W
R922	NRSA63D-103X	M.G.RESISTOR	10k	1/16W
R923	NRSA63D-101X	M.G.RESISTOR	100	1/16W
R924	NRSA63D-101X	M.G.RESISTOR	100	1/16W
R925	NRSA63D-101X	M.G.RESISTOR	100	1/16W
R926	NRSA63D-101X	M.G.RESISTOR	100	1/16W
R927	NRSA63D-101X	M.G.RESISTOR	100	1/16W
R928	NRSA63D-101X	M.G.RESISTOR	100	1/16W
R929	NRSA63D-223X	M.G.RESISTOR	22k	1/16W
R930	NRSA63D-223X	M.G.RESISTOR	22k	1/16W
R931	NRSA63D-392X	M.G.RESISTOR	3.9k	1/16W
R932	NRSA63D-622X	M.G.RESISTOR	6.2k	1/16W
R933	NRSA63D-392X	M.G.RESISTOR	3.9k	1/16W
R934	NRSA63D-622X	M.G.RESISTOR	6.2k	1/16W
R935	NRSA63D-101X	M.G.RESISTOR	100	1/16W
R936	NRSA63D-101X	M.G.RESISTOR	100	1/16W
R937	NRSA63D-101X	M.G.RESISTOR	100	1/16W
R938	NRSA63D-101X	M.G.RESISTOR	100	1/16W
R939	NRSA63D-101X	M.G.RESISTOR	100	1/16W
R940	NRSA63D-101X	M.G.RESISTOR	100	1/16W
R941	NRSA63D-101X	M.G.RESISTOR	100	1/16W

Symbol No.	Part No.	Part Name	Description	
R942	NRSA63D-101X	M.G.RESISTOR	100	1/16W
R943	NRSA63D-101X	M.G.RESISTOR	100	1/16W
R944	NRSA63D-101X	M.G.RESISTOR	100	1/16W
R945	NRSA63D-101X	M.G.RESISTOR	100	1/16W
R946	NRSA63D-101X	M.G.RESISTOR	100	1/16W
R947	NRSA63D-563X	M.G.RESISTOR	56k	1/16W
R948	NRSA63D-154X	M.G.RESISTOR	150k	1/16W
R949	NRSA63D-334X	M.G.RESISTOR	330k	1/16W
R1909	NRSA63D-101X	M.G.RESISTOR	100	1/16W
R1910	NRSA63D-101X	M.G.RESISTOR	100	1/16W
R1912	NRSA63D-101X	M.G.RESISTOR	100	1/16W
R1913	NRSA63D-101X	M.G.RESISTOR	100	1/16W
R1914	NRSA63D-101X	M.G.RESISTOR	100	1/16W
R1915	NRSA63D-101X	M.G.RESISTOR	100	1/16W
R1916	NRSA63D-101X	M.G.RESISTOR	100	1/16W
R1917	NRSA63D-101X	M.G.RESISTOR	100	1/16W
R1918	NRSA63D-101X	M.G.RESISTOR	100	1/16W
R1919	NRSA63D-101X	M.G.RESISTOR	100	1/16W
R1920	NRSA63D-101X	M.G.RESISTOR	100	1/16W
R1921	NRSA63D-101X	M.G.RESISTOR	100	1/16W
R1922	NRSA63D-101X	M.G.RESISTOR	100	1/16W
R1923	NRSA63D-101X	M.G.RESISTOR	100	1/16W
R1924	NRSA63D-101X	M.G.RESISTOR	100	1/16W
R1925	NRSA63D-101X	M.G.RESISTOR	100	1/16W
R1926	NRSA63D-101X	M.G.RESISTOR	100	1/16W
R1927	NRSA63D-101X	M.G.RESISTOR	100	1/16W
R1928	NRSA63D-101X	M.G.RESISTOR	100	1/16W
R1929	NRSA63D-101X	M.G.RESISTOR	100	1/16W
R1930	NRSA63D-101X	M.G.RESISTOR	100	1/16W
R1931	NRSA63D-101X	M.G.RESISTOR	100	1/16W
R1932	NRSA63D-101X	M.G.RESISTOR	100	1/16W
R1934	NRSA63D-101X	M.G.RESISTOR	100	1/16W
R1935	NRSA63D-101X	M.G.RESISTOR	100	1/16W
R1936	NRSA63D-101X	M.G.RESISTOR	100	1/16W
R1938	NRSA63D-223X	M.G.RESISTOR	22k	1/16W
R1939	NRSA63D-223X	M.G.RESISTOR	22k	1/16W
R1940	NRSA63D-223X	M.G.RESISTOR	22k	1/16W
R1941	NRSA63D-223X	M.G.RESISTOR	22k	1/16W
R1942	NRSA63D-223X	M.G.RESISTOR	22k	1/16W
R1943	NRSA63D-223X	M.G.RESISTOR	22k	1/16W
C61	NCB31CK-473X	CER.CAPACITOR	0.047	16V
C62	NBE41CM-106X	TAN.CAPACITOR	10	16V
C63	NCB31CK-473X	CER.CAPACITOR	0.047	16V
C64	NBE41CM-106X	TAN.CAPACITOR	10	16V
C65	NCB31CK-473X	CER.CAPACITOR	0.047	16V
C66	NCB31CK-473X	CER.CAPACITOR	0.047	16V
C67	NCB31CK-473X	CER.CAPACITOR	0.047	16V
C68	NCB31CK-473X	CER.CAPACITOR	0.047	16V
C69	NDC31HJ-270X	CER.CAPACITOR	27p	50V
C431	NDC31HJ-5R0X	CER.CAPACITOR	5p	50V
C432	NDC31HJ-100X	CER.CAPACITOR	10p	50V
C433	NDC31HJ-5R0X	CER.CAPACITOR	5p	50V
C434	NDC31HJ-330X	CER.CAPACITOR	33p	50V
C435	NDC31HJ-220X	CER.CAPACITOR	22p	50V
C436	NDC31HJ-220X	CER.CAPACITOR	22p	50V
C437	NDC31HJ-470X	CER.CAPACITOR	47p	50V
C438	NDC31HJ-470X	CER.CAPACITOR	47p	50V
C439	NDC31HJ-121X	CER.CAPACITOR	120p	50V
C451	NCB31EK-472X	CER.CAPACITOR	4700p	25V
C452	NCB21HK-472X	CER.CAPACITOR	4700p	50V
C453	NCB31CK-473X	CER.CAPACITOR	0.047	16V
C454	NCB21AK-105X	CER.CAPACITOR	1	10V
C456	NCB31CK-473X	CER.CAPACITOR	0.047	16V
C461	NCB31CK-473X	CER.CAPACITOR	0.047	16V
C462	NCB31CK-473X	CER.CAPACITOR	0.047	16V
C463	NCB31CK-473X	CER.CAPACITOR	0.047	16V
C464	NCB31CK-473X	CER.CAPACITOR	0.047	16V
C465	NCB31CK-473X	CER.CAPACITOR	0.047	16V
C466	NCB31CK-473X	CER.CAPACITOR	0.047	16V
C475	NDC31HJ-5R0X	CER.CAPACITOR	5p	50V
C531	NDC31HJ-7R0X	CER.CAPACITOR	7p	50V

Symbol No.	Part No.	Part Name	Description
C532	NDC31HJ-150X	CER.CAPACITOR	15p 50V
C533	NDC31HJ-150X	CER.CAPACITOR	15p 50V
C534	NDC31HJ-7R0X	CER.CAPACITOR	7p 50V
C535	NDC31HJ-220X	CER.CAPACITOR	22p 50V
C536	NDC31HJ-220X	CER.CAPACITOR	22p 50V
C537	NDC31HJ-470X	CER.CAPACITOR	47p 50V
C538	NDC31HJ-470X	CER.CAPACITOR	47p 50V
C539	NDC31HJ-121X	CER.CAPACITOR	120p 50V
C540	NDC31HJ-150X	CER.CAPACITOR	15p 50V
C541	NDC31HJ-270X	CER.CAPACITOR	27p 50V
C551	NCB31EK-472X	CER.CAPACITOR	4700p 25V
C552	NCB21HK-472X	CER.CAPACITOR	4700p 50V
C553	NCB31CK-473X	CER.CAPACITOR	0.047 16V
C554	NCB21AK-105X	CER.CAPACITOR	1 10V
C556	NCB31CK-473X	CER.CAPACITOR	0.047 16V
C557	NDC31HJ-470X	CER.CAPACITOR	47p 50V
C558	NDC31HJ-470X	CER.CAPACITOR	47p 50V
C561	NCB31CK-473X	CER.CAPACITOR	0.047 16V
C562	NCB31CK-473X	CER.CAPACITOR	0.047 16V
C563	NCB31CK-473X	CER.CAPACITOR	0.047 16V
C564	NCB31CK-473X	CER.CAPACITOR	0.047 16V
C565	NCB31CK-473X	CER.CAPACITOR	0.047 16V
C566	NCB31CK-473X	CER.CAPACITOR	0.047 16V
C567	NDC31HJ-220X	CER.CAPACITOR	22p 50V
C568	NBE21AM-106X	TAN.CAPACITOR	10 10V
C569	NCB31CK-473X	CER.CAPACITOR	0.047 16V
C570	NBE21AM-106X	TAN.CAPACITOR	10 10V
C571	NBSH1AM-227X	TAN.CAPACITOR	220 10V
C572	NBSH1AM-227X	TAN.CAPACITOR	220 10V
C573	NBSG1CM-476X	TAN.CAPACITOR	47 16V
C574	NBE21AM-106X	TAN.CAPACITOR	10 10V
C575	NDC31HJ-5R0X	CER.CAPACITOR	5p 50V
C576	NBE21AM-106X	TAN.CAPACITOR	10 10V
C631	NDC31HJ-5R0X	CER.CAPACITOR	5p 50V
C632	NDC31HJ-100X	CER.CAPACITOR	10p 50V
C633	NDC31HJ-5R0X	CER.CAPACITOR	5p 50V
C634	NDC31HJ-330X	CER.CAPACITOR	33p 50V
C635	NDC31HJ-220X	CER.CAPACITOR	22p 50V
C636	NDC31HJ-220X	CER.CAPACITOR	22p 50V
C637	NDC31HJ-470X	CER.CAPACITOR	47p 50V
C638	NDC31HJ-470X	CER.CAPACITOR	47p 50V
C639	NDC31HJ-121X	CER.CAPACITOR	120p 50V
C651	NCB31EK-472X	CER.CAPACITOR	4700p 25V
C652	NCB21HK-472X	CER.CAPACITOR	4700p 50V
C653	NCB31CK-473X	CER.CAPACITOR	0.047 16V
C654	NCB21AK-105X	CER.CAPACITOR	1 10V
C656	NCB31CK-473X	CER.CAPACITOR	0.047 16V
C661	NCB31CK-473X	CER.CAPACITOR	0.047 16V
C662	NCB31CK-473X	CER.CAPACITOR	0.047 16V
C663	NCB31CK-473X	CER.CAPACITOR	0.047 16V
C664	NCB31CK-473X	CER.CAPACITOR	0.047 16V
C665	NCB31CK-473X	CER.CAPACITOR	0.047 16V
C666	NCB31CK-473X	CER.CAPACITOR	0.047 16V
C675	NDC31HJ-5R0X	CER.CAPACITOR	5p 50V
C901	NCB31CK-473X	CER.CAPACITOR	0.047 16V
C902	NCB31CK-473X	CER.CAPACITOR	0.047 16V
C903	NCB31CK-473X	CER.CAPACITOR	0.047 16V
C904	NCB31CK-473X	CER.CAPACITOR	0.047 16V
C905	NCB31CK-473X	CER.CAPACITOR	0.047 16V
C906	NCB31CK-473X	CER.CAPACITOR	0.047 16V
C907	NCB31CK-473X	CER.CAPACITOR	0.047 16V
C908	NCB31CK-473X	CER.CAPACITOR	0.047 16V
C909	NCB31CK-473X	CER.CAPACITOR	0.047 16V
C910	NCB31CK-473X	CER.CAPACITOR	0.047 16V
C911	NCB31CK-473X	CER.CAPACITOR	0.047 16V
C912	NCB31CK-473X	CER.CAPACITOR	0.047 16V
C913	NBSH1AM-227X	TAN.CAPACITOR	220 10V
C914	NBSH1AM-227X	TAN.CAPACITOR	220 10V
C915	NDC31HJ-180X	CER.CAPACITOR	18p 50V
C916	NCB31CK-473X	CER.CAPACITOR	0.047 16V
C917	NBE21CM-475X	TAN.CAPACITOR	4.7 16V
C918	NCB31CK-473X	CER.CAPACITOR	0.047 16V
C919	NCB31CK-473X	CER.CAPACITOR	0.047 16V

Symbol No.	Part No.	Part Name	Description
C922	NBE21CM-475X	TAN.CAPACITOR	4.7 16V
L401	NQL054J-3R3X	COIL	3.3uH
L402	NQL054K-100X	COIL	10uH
L403	NQL054K-100X	COIL	10uH
L404	NQL054K-330X	COIL	33uH
L405	NQL054K-100X	COIL	10uH
L406	NQL054K-100X	COIL	10uH
L407	NQL054K-1R0X	COIL	1uH
L501	NQL054K-120X	COIL	12uH
L502	NQL054K-150X	COIL	15uH
L503	NQL054K-150X	COIL	15uH
L504	NQL054K-330X	COIL	33uH
L505	NQL054K-100X	COIL	10uH
L506	NQL054K-100X	COIL	10uH
L507	NQL054K-1R0X	COIL	1uH
L508	NQL054K-120X	COIL	12uH
L509	NQL054K-4R7X	COIL	4.7uH
L601	NQL054J-3R3X	COIL	3.3uH
L602	NQL054K-100X	COIL	10uH
L603	NQL054K-100X	COIL	10uH
L604	NQL054K-330X	COIL	33uH
L605	NQL054K-100X	COIL	10uH
L606	NQL054K-100X	COIL	10uH
L607	NQL054K-1R0X	COIL	1uH
LC61	SCV1804-222Z	LC FILTER	
X901	NAX0061-001X	CRYSTAL	4MHz
CN14	QGF0508F1-24X	CONNECTOR	24PIN
CN21	QGF0508F1-50X	CONNECTOR	50PIN
CN23	QGF0508F1-30X	CONNECTOR	30PIN
CN24	QGB0805K1-40X	CONNECTOR	40PIN
CN45	QGA1201F2-15X	CONNECTOR	15PIN
CN46	QGA1201F2-03X	CONNECTOR	3PIN
CN101	QGA1201F2-04X	CONNECTOR	4PIN
K61	SCV2732-1HS601	FERRITE BEADS	
K901	SCV2732-1LL680	FERRITE BEADS	
K902	SCV2732-1LL680	FERRITE BEADS	
K903	SCV2732-1LL680	FERRITE BEADS	
K904	SCV2732-1LL680	FERRITE BEADS	
K905	SCV2732-1LL680	FERRITE BEADS	
K906	SCV2732-1LL680	FERRITE BEADS	
K907	SCV2732-1LL680	FERRITE BEADS	
K908	SCV2732-1LL680	FERRITE BEADS	
K909	SCV2732-1LL680	FERRITE BEADS	
K910	SCV2732-1LL680	FERRITE BEADS	
K911	SCV2732-1LL680	FERRITE BEADS	
K912	SCV2732-1LL680	FERRITE BEADS	
K913	SCV2732-1LL680	FERRITE BEADS	
K914	SCV2732-1LL680	FERRITE BEADS	
K915	SCV2732-1LL680	FERRITE BEADS	
K916	SCV2732-1LL680	FERRITE BEADS	
K917	SCV2732-1LL680	FERRITE BEADS	
K918	SCV2732-1LL680	FERRITE BEADS	
K919	SCV2732-1LL680	FERRITE BEADS	
K920	SCV2732-1LL680	FERRITE BEADS	
K921	SCV2732-1LL680	FERRITE BEADS	
K922	SCV2732-1LL680	FERRITE BEADS	
K923	SCV2732-1LL680	FERRITE BEADS	
K924	SCV2732-1LL680	FERRITE BEADS	
K925	SCV2732-1LL680	FERRITE BEADS	
K926	SCV2732-1LL680	FERRITE BEADS	
K927	SCV2732-1LL680	FERRITE BEADS	
K928	SCV2732-1LL680	FERRITE BEADS	
K929	SCV2732-1LL680	FERRITE BEADS	

6.11 CAM2 BOARD ASSEMBLY PARTS LIST [1][6]

SCK2605-02-N0B(U)

SCK2605-02-P0B(E) [1][6]□□□□□□□

Symbol No.	Part No.	Part Name	Description
IC101	LM1881M-X	I.C.(M)	NATIONAL SEMICO
IC102	XC95144X10T-002	I.C.(M)	XILINX
IC103	TC74VHCT541AFTX	I.C.(M)	TOSHIBA
IC104	TC74VHC574FT-X	I.C.(M)	TOSHIBA
IC105	M62353GP-X	I.C.(M)	MITSUBISHI
IC106	TC7SU04FU-X	I.C.(M)	TOSHIBA
IC107	TC7SU04FU-X	I.C.(M)	TOSHIBA
IC108	UPC812G2-X	I.C.(M)	NEC
IC109	TC74HC4538AFS-X	I.C.(M)	TOSHIBA
IC112	TC7SH00FU-X	I.C.(M)	TOSHIBA
IC113	TC4W53FU-X	I.C.(M)	TOSHIBA
IC114	TC7WT241FU-X	I.C.(M)	TOSHIBA
IC115	LMC6082IM-X	I.C.(M)	NATIONAL SEMICO
IC116	NJM062V-X	I.C.(M)	JRC
IC117	TC7SH08FU-X	I.C.(M)	TOSHIBA
IC118	TC7SH00FU-X	I.C.(M)	TOSHIBA
IC119	TC7WT241FU-X	I.C.(M)	TOSHIBA
IC417	CLC450AJM5-X	I.C.(M)	NATIONAL SEMICO
IC423	LMC6082IM-X	I.C.(M)	NATIONAL SEMICO
IC481	ADS933Y-X	I.C.(M)	BURR BROWN
IC517	CLC450AJM5-X	I.C.(M)	NATIONAL SEMICO
IC581	ADS933Y-X	I.C.(M)	BURR BROWN
IC617	CLC450AJM5-X	I.C.(M)	NATIONAL SEMICO
IC623	LMC6082IM-X	I.C.(M)	NATIONAL SEMICO
IC681	ADS933Y-X	I.C.(M)	BURR BROWN
IC691	REF1004C-2.5-X	I.C.(M)	
IC692	LMC6082IM-X	I.C.(M)	NATIONAL SEMICO
IC693	LMC6082IM-X	I.C.(M)	NATIONAL SEMICO
IC701	NJM2068M-D-X	I.C.(M)	JRC
IC702	TC7SH00FU-X	I.C.(M)	TOSHIBA
IC750	BU4094BCFV-X	I.C.(M)	ROHM
IC801	JCS0050	I.C.(M)	JVC
IC811	ADV7171KS	I.C.(M)	ANALOG DEVICES
IC821	CLC450AJM5-X	I.C.(M)	NATIONAL SEMICO
IC823	CLC450AJM5-X	I.C.(M)	NATIONAL SEMICO
IC824	CLC450AJM5-X	I.C.(M)	NATIONAL SEMICO
IC825	CLC450AJM5-X	I.C.(M)	NATIONAL SEMICO
IC826	CLC450AJM5-X	I.C.(M)	NATIONAL SEMICO
IC827	CLC450AJM5-X	I.C.(M)	NATIONAL SEMICO
IC828	TC74VHC574FT-X	I.C.(M)	TOSHIBA
IC829	TC74VHC574FT-X	I.C.(M)	TOSHIBA
IC830	SN74LV125APW-X	I.C.(M)	TEXAS
IC832	LP2986IMM-X	I.C.(M)	NATIONAL SEMICO
IC833	TC7SH08FU-X	I.C.(M)	TOSHIBA
IC900	TC7SH00FU-X	I.C.(M)	TOSHIBA
IC901	TC74VHC157FT-X	I.C.(M)	TOSHIBA
IC902	UPD6461GS-913	I.C.(M)	NEC
IC907	SN74LV08APW-X	I.C.(M)	TEXAS
IC908	TC7SH32FU-X	I.C.(M)	TOSHIBA
IC909	AD8031ART-X	I.C.(M)	ANALOG DEVICES
IC910	TC4W53FU-X	I.C.(M)	TOSHIBA
IC911	TC7SH00FU-X	I.C.(M)	TOSHIBA
IC912	AD8031ART-X	I.C.(M)	ANALOG DEVICES
IC913	TC4W53FU-X	I.C.(M)	TOSHIBA
Q101	2SC4626/BC/-X	TRANSISTOR	MATSUSHITA
Q601	2SC4626/BC/-X	TRANSISTOR	MATSUSHITA
Q602	2SA1790/BC/-X	TRANSISTOR	MATSUSHITA
Q701	2SB1463/RST/-X	TRANSISTOR	MATSUSHITA
Q702	2SD2240/RST/-X	TRANSISTOR	MATSUSHITA
Q703	2SD2240/RST/-X	TRANSISTOR	MATSUSHITA
Q903	2SA1790/BC/-X	TRANSISTOR	MATSUSHITA
Q904	2SC4626/BC/-X	TRANSISTOR	MATSUSHITA
Q905	2SA1790/BC/-X	TRANSISTOR	MATSUSHITA
Q906	2SC4626/BC/-X	TRANSISTOR	MATSUSHITA
Q907	DTA124EUA-X	TRANSISTOR	ROHM
Q909	DTA124EUA-X	TRANSISTOR	ROHM
Q910	DTA124EUA-X	TRANSISTOR	ROHM
Q911	2SC4626/BC/-X	TRANSISTOR	MATSUSHITA
D701	MA143A-X	DIODE	MATSUSHITA
D702	MA143A-X	DIODE	MATSUSHITA

Symbol No.	Part No.	Part Name	Description	
D750	MA143A-X	DIODE	MATSUSHITA	
D751	MA143A-X	DIODE	MATSUSHITA	
D752	MA111-X	DIODE	MATSUSHITA	
D901	HZM6C-X	ZENER DIODE	HITACHI	
D903	MA143A-X	DIODE	MATSUSHITA	
D904	MA143A-X	DIODE	MATSUSHITA	
D905	MA143A-X	DIODE	MATSUSHITA	
D906	MA143A-X	DIODE	MATSUSHITA	
R102	NRSA63D-104X	M.G.RESISTOR	100k	1/16W
R103	NRSA63D-222X	M.G.RESISTOR	2.2k	1/16W
R104	NRSA63D-122X	M.G.RESISTOR	1.2k	1/16W
R105	NRSA63D-684X	M.G.RESISTOR	680k	1/16W
R106	NRSA63J-0R0X	M.G.RESISTOR	0	1/16W (E)
R114	NRSA63J-0R0X	M.G.RESISTOR	0	1/16W
R115	NRSA63J-0R0X	M.G.RESISTOR	0	1/16W (U)
R116	NRSA63D-101X	M.G.RESISTOR	100	1/16W
R117	NRSA63J-0R0X	M.G.RESISTOR	0	1/16W
R118	NRSA63D-101X	M.G.RESISTOR	100	1/16W
R119	NRSA63D-101X	M.G.RESISTOR	100	1/16W
R120	NRSA63D-101X	M.G.RESISTOR	100	1/16W
R122	NRSA63D-101X	M.G.RESISTOR	100	1/16W
R126	NRSA63J-0R0X	M.G.RESISTOR	0	1/16W
R129	NRSA63D-104X	M.G.RESISTOR	100k	1/16W
R130	NRSA63D-221X	M.G.RESISTOR	220	1/16W
R131	NRSA63D-104X	M.G.RESISTOR	100k	1/16W
R132	NRSA63D-104X	M.G.RESISTOR	100k	1/16W
R133	NRSA63D-104X	M.G.RESISTOR	100k	1/16W
R134	NRSA63D-224X	M.G.RESISTOR	220k	1/16W
R135	NRSA63D-100X	M.G.RESISTOR	10	1/16W
R138	NRSA63D-823X	M.G.RESISTOR	82k	1/16W
R139	NRSA63D-563X	M.G.RESISTOR	56k	1/16W
R140	NRSA63D-222X	M.G.RESISTOR	2.2k	1/16W
R141	NRSA63D-333X	M.G.RESISTOR	33k	1/16W
R142	NRSA63D-562X	M.G.RESISTOR	5.6k	1/16W
R143	NRSA63D-103X	M.G.RESISTOR	10k	1/16W
R144	NRSA63D-224X	M.G.RESISTOR	220k	1/16W
R145	NRSA63D-104X	M.G.RESISTOR	100k	1/16W
R146	NRSA63D-122X	M.G.RESISTOR	1.2k	1/16W
R147	NRSA63D-102X	M.G.RESISTOR	1k	1/16W
R148	NRSA63J-0R0X	M.G.RESISTOR	0	1/16W
R149	NRSA63D-183X	M.G.RESISTOR	18k	1/16W
R150	NRSA63D-822X	M.G.RESISTOR	8.2k	1/16W
R151	NRSA63J-0R0X	M.G.RESISTOR	0	1/16W
R152	NRSA63J-0R0X	M.G.RESISTOR	0	1/16W
R153	NDC31HJ-680X	CER.CAPACITOR	68	50V
R157	NRSA63D-100X	M.G.RESISTOR	10	1/16W
R158	NRSA63D-100X	M.G.RESISTOR	10	1/16W
R159	NRSA63D-100X	M.G.RESISTOR	10	1/16W
R160	NRSA63D-100X	M.G.RESISTOR	10	1/16W
R161	NRSA63D-100X	M.G.RESISTOR	10	1/16W
R162	NRSA63D-103X	M.G.RESISTOR	10k	1/16W
R163	NRSA63D-154X	M.G.RESISTOR	150k	1/16W
R164	NRSA63D-222X	M.G.RESISTOR	2.2k	1/16W
R165	NRSA63D-103X	M.G.RESISTOR	10k	1/16W
R166	NRSA63D-100X	M.G.RESISTOR	10	1/16W
R167	NRSA63D-331X	M.G.RESISTOR	330	1/16W
R168	NRSA63D-471X	M.G.RESISTOR	470	1/16W
R169	NRSA63D-471X	M.G.RESISTOR	470	1/16W
R170	NRSA63D-101X	M.G.RESISTOR	100	1/16W
R190	NRSA63D-100X	M.G.RESISTOR	10	1/16W
R191	NRSA63D-100X	M.G.RESISTOR	10	1/16W
R211	NRSA63J-0R0X	M.G.RESISTOR	0	1/16W
R212	NRSA63J-0R0X	M.G.RESISTOR	0	1/16W
R213	NRSA63J-0R0X	M.G.RESISTOR	0	1/16W
R215	NRSA63J-0R0X	M.G.RESISTOR	0	1/16W
R451	NRSA63D-563X	M.G.RESISTOR	56k	1/16W
R452	NRSA63D-222X	M.G.RESISTOR	2.2k	1/16W
R453	NRSA63D-561X	M.G.RESISTOR	560	1/16W
R454	NRSA63D-102X	M.G.RESISTOR	1k	1/16W
R455	NRSA63D-682X	M.G.RESISTOR	6.8k	1/16W
R472	NRSA63J-105X	M.G.RESISTOR	1M	1/16W
R473	NRSA63J-105X	M.G.RESISTOR	1M	1/16W

Symbol No.	Part No.	Part Name	Description	
R474	NRSA63D-333X	M.G.RESISTOR	33k	1/16W
R475	NRSA63D-103X	M.G.RESISTOR	10k	1/16W
R477	NRSA63D-472X	M.G.RESISTOR	4.7k	1/16W
R478	NRSA63D-333X	M.G.RESISTOR	33k	1/16W
R481	NRSA63D-101X	M.G.RESISTOR	100	1/16W
R551	NRSA63D-563X	M.G.RESISTOR	56k	1/16W
R552	NRSA63D-222X	M.G.RESISTOR	2.2k	1/16W
R553	NRSA63D-561X	M.G.RESISTOR	560	1/16W
R554	NRSA63D-102X	M.G.RESISTOR	1k	1/16W
R555	NRSA63D-682X	M.G.RESISTOR	6.8k	1/16W
R572	NRSA63J-105X	M.G.RESISTOR	1M	1/16W
R573	NRSA63J-105X	M.G.RESISTOR	1M	1/16W
R574	NRSA63D-333X	M.G.RESISTOR	33k	1/16W
R576	NRSA63D-103X	M.G.RESISTOR	10k	1/16W
R577	NRSA63D-472X	M.G.RESISTOR	4.7k	1/16W
R578	NRSA63D-333X	M.G.RESISTOR	33k	1/16W
R581	NRSA63D-101X	M.G.RESISTOR	100	1/16W
R651	NRSA63D-563X	M.G.RESISTOR	56k	1/16W
R652	NRSA63D-222X	M.G.RESISTOR	2.2k	1/16W
R653	NRSA63D-561X	M.G.RESISTOR	560	1/16W
R654	NRSA63D-102X	M.G.RESISTOR	1k	1/16W
R655	NRSA63D-682X	M.G.RESISTOR	6.8k	1/16W
R672	NRSA63J-105X	M.G.RESISTOR	1M	1/16W
R673	NRSA63J-105X	M.G.RESISTOR	1M	1/16W
R674	NRSA63D-333X	M.G.RESISTOR	33k	1/16W
R676	NRSA63D-103X	M.G.RESISTOR	10k	1/16W
R677	NRSA63D-472X	M.G.RESISTOR	4.7k	1/16W
R678	NRSA63D-333X	M.G.RESISTOR	33k	1/16W
R681	NRSA63D-101X	M.G.RESISTOR	100	1/16W
R682	NRSA63D-472X	M.G.RESISTOR	4.7k	1/16W
R683	NRSA63D-103X	M.G.RESISTOR	10k	1/16W
R684	NRSA63D-103X	M.G.RESISTOR	10k	1/16W
R685	NRSA63D-183X	M.G.RESISTOR	18k	1/16W
R686	NRSA63D-822X	M.G.RESISTOR	8.2k	1/16W
R687	NRSA63D-102X	M.G.RESISTOR	1k	1/16W
R688	NRSA63D-332X	M.G.RESISTOR	3.3k	1/16W
R689	NRSA63D-153X	M.G.RESISTOR	15k	1/16W
R690	NRSA63D-100X	M.G.RESISTOR	10	1/16W
R691	NRSA63D-102X	M.G.RESISTOR	1k	1/16W
R692	NRSA63D-152X	M.G.RESISTOR	1.5k	1/16W
R693	NRSA63D-182X	M.G.RESISTOR	1.8k	1/16W
R694	NRSA63D-100X	M.G.RESISTOR	10	1/16W
R695	NRSA63D-102X	M.G.RESISTOR	1k	1/16W
R696	NRSA63D-183X	M.G.RESISTOR	18k	1/16W
R697	NRSA63D-183X	M.G.RESISTOR	18k	1/16W
R698	NRSA63D-100X	M.G.RESISTOR	10	1/16W
R699	NRSA63J-0R0X	M.G.RESISTOR	0	1/16W
R700	NRSA63J-0R0X	M.G.RESISTOR	0	1/16W
R701	NRSA63D-682X	M.G.RESISTOR	6.8k	1/16W
R702	NRSA63D-682X	M.G.RESISTOR	6.8k	1/16W
R703	NRSA63D-682X	M.G.RESISTOR	6.8k	1/16W
R704	NRSA63D-682X	M.G.RESISTOR	6.8k	1/16W
R706	NRSA63D-750X	M.G.RESISTOR	75	1/16W
R707	NRSA63D-472X	M.G.RESISTOR	4.7k	1/16W
R708	NRSA63D-104X	M.G.RESISTOR	100k	1/16W
R709	NRSA63J-0R0X	M.G.RESISTOR	0	1/16W
R711	NRSA63D-682X	M.G.RESISTOR	6.8k	1/16W
R712	NRSA63D-682X	M.G.RESISTOR	6.8k	1/16W
R713	NRSA63D-682X	M.G.RESISTOR	6.8k	1/16W
R714	NRSA63D-682X	M.G.RESISTOR	6.8k	1/16W
R716	NRSA63D-680X	M.G.RESISTOR	68	1/16W
R717	NRSA63D-472X	M.G.RESISTOR	4.7k	1/16W
R718	NRSA63D-104X	M.G.RESISTOR	100k	1/16W
R719	NRSA63J-0R0X	M.G.RESISTOR	0	1/16W
R721	NRSA63J-105X	M.G.RESISTOR	1M	1/16W
R722	NRSA63D-274X	M.G.RESISTOR	270k	1/16W
R723	NRSA63D-274X	M.G.RESISTOR	270k	1/16W
R724	NRSA63D-473X	M.G.RESISTOR	47k	1/16W
R725	NRSA63D-473X	M.G.RESISTOR	47k	1/16W
R726	NRSA63D-273X	M.G.RESISTOR	27k	1/16W
R727	NRSA63D-102X	M.G.RESISTOR	1k	1/16W
R728	NRSA63D-102X	M.G.RESISTOR	1k	1/16W
R729	NRSA63J-0R0X	M.G.RESISTOR	0	1/16W

Symbol No.	Part No.	Part Name	Description	
R730	NRSA63D-101X	M.G.RESISTOR	100	1/16W
R750	NRSA63D-224X	M.G.RESISTOR	220k	1/16W
R751	NRSA63D-104X	M.G.RESISTOR	100k	1/16W
R752	NRSA63D-273X	M.G.RESISTOR	27k	1/16W
R753	NRSA63D-473X	M.G.RESISTOR	47k	1/16W
R754	NRSA63D-102X	M.G.RESISTOR	1k	1/16W
R755	NRSA63J-0R0X	M.G.RESISTOR	0	1/16W
R801	NRSA63J-0R0X	M.G.RESISTOR	0	1/16W
R802	NRSA63D-103X	M.G.RESISTOR	10k	1/16W
R803	NRSA63D-223X	M.G.RESISTOR	22k	1/16W
R804	NRSA63D-223X	M.G.RESISTOR	22k	1/16W
R805	NRSA63D-223X	M.G.RESISTOR	22k	1/16W
R806	NRSA63D-223X	M.G.RESISTOR	22k	1/16W
R807	NRSA63D-682X	M.G.RESISTOR	6.8k	1/16W
R809	NRSA63D-472X	M.G.RESISTOR	4.7k	1/16W
R810	NRSA63D-104X	M.G.RESISTOR	100k	1/16W
R811	NRSA63D-301X	M.G.RESISTOR	300	1/16W
R813	NRSA63D-101X	M.G.RESISTOR	100	1/16W
R814	NRSA63D-102X	M.G.RESISTOR	1k	1/16W
R815	NRSA63D-104X	M.G.RESISTOR	100k	1/16W
R818	NRSA63D-100X	M.G.RESISTOR	10	1/16W
R819	NRSA63D-100X	M.G.RESISTOR	10	1/16W
R820	NRSA63D-151X	M.G.RESISTOR	150	1/16W
R821	NRSA63D-151X	M.G.RESISTOR	150	1/16W
R822	NRSA63D-151X	M.G.RESISTOR	150	1/16W
R823	NRSA63D-151X	M.G.RESISTOR	150	1/16W
R824	NRSA63D-104X	M.G.RESISTOR	100k	1/16W
R825	NRSA63D-100X	M.G.RESISTOR	10	1/16W (U)
R826	NRSA63D-101X	M.G.RESISTOR	100	1/16W
R827	NRSA63D-101X	M.G.RESISTOR	100	1/16W
R828	NRSA63D-472X	M.G.RESISTOR	4.7k	1/16W
R829	NRSA63D-472X	M.G.RESISTOR	4.7k	1/16W
R830	NRSA63D-561X	M.G.RESISTOR	560	1/16W
R831	NRSA63D-102X	M.G.RESISTOR	1k	1/16W
R832	NRSA63D-102X	M.G.RESISTOR	1k	1/16W
R833	NRSA63D-102X	M.G.RESISTOR	1k	1/16W
R839	NRSA63D-750X	M.G.RESISTOR	75	1/16W
R841	NRSA63D-222X	M.G.RESISTOR	2.2k	1/16W
R842	NRSA63D-183X	M.G.RESISTOR	18k	1/16W (U)
	NRSA63D-103X	M.G.RESISTOR	10k	1/16W (E)
R843	NRSA63D-222X	M.G.RESISTOR	2.2k	1/16W
R844	NRSA63D-102X	M.G.RESISTOR	1k	1/16W
R845	NRSA63D-100X	M.G.RESISTOR	10	1/16W
R846	NRSA63D-183X	M.G.RESISTOR	18k	1/16W (U)
	NRSA63D-103X	M.G.RESISTOR	10k	1/16W (E)
R847	NRSA63D-102X	M.G.RESISTOR	1k	1/16W
R848	NRSA63D-102X	M.G.RESISTOR	1k	1/16W
R849	NRSA63D-102X	M.G.RESISTOR	1k	1/16W
R850	NRSA63D-183X	M.G.RESISTOR	18k	1/16W (U)
	NRSA63D-333X	M.G.RESISTOR	33k	1/16W (E)
R851	NRSA63D-752X	M.G.RESISTOR	7.5k	1/16W (U)
	NRSA63D-682X	M.G.RESISTOR	6.8k	1/16W (E)
R852	NRSA63D-103X	M.G.RESISTOR	10k	1/16W (U)
	NRSA63D-123X	M.G.RESISTOR	12k	1/16W (E)
R853	NRSA63D-273X	M.G.RESISTOR	27k	1/16W
R854	NRSA63D-102X	M.G.RESISTOR	1k	1/16W
R855	NRSA63D-100X	M.G.RESISTOR	10	1/16W
R856	NRSA63D-821X	M.G.RESISTOR	820	1/16W
R857	NRSA63D-102X	M.G.RESISTOR	1k	1/16W
R858	NRSA63D-102X	M.G.RESISTOR	1k	1/16W
R859	NRSA63D-102X	M.G.RESISTOR	1k	1/16W
R860	NRSA63D-912X	M.G.RESISTOR	9.1k	1/16W
R861	NRSA63D-223X	M.G.RESISTOR	22k	1/16W
R862	NRSA63D-224X	M.G.RESISTOR	220k	1/16W
R864	NRSA63D-102X	M.G.RESISTOR	1k	1/16W
R865	NRSA63D-100X	M.G.RESISTOR	10	1/16W
R867	NRSA63D-104X	M.G.RESISTOR	100k	1/16W
R868	NRSA63D-274X	M.G.RESISTOR	270k	1/16W
R869	NRSA63D-561X	M.G.RESISTOR	560	1/16W
R870	NRSA63D-513X	M.G.RESISTOR	51k	1/16W
R871	NRSA63D-101X	M.G.RESISTOR	100	1/16W
R872	NRSA63D-104X	M.G.RESISTOR	100k	1/16W
R873	NRSA63D-334X	M.G.RESISTOR	330k	1/16W

[CAM2]

Symbol No.	Part No.	Part Name	Description	
R874	NRSA63D-473X	M.G.RESISTOR	47k	1/16W
R875	NRSA63D-103X	M.G.RESISTOR	10k	1/16W
R876	NRSA63D-103X	M.G.RESISTOR	10k	1/16W
R877	NRSA63D-821X	M.G.RESISTOR	820	1/16W
R878	NRSA63D-471X	M.G.RESISTOR	470	1/16W
R879	NRSA63D-471X	M.G.RESISTOR	470	1/16W
R880	NRSA63D-471X	M.G.RESISTOR	470	1/16W
R881	NRSA63D-471X	M.G.RESISTOR	470	1/16W
R882	NRSA63D-471X	M.G.RESISTOR	470	1/16W
R883	NRSA63D-471X	M.G.RESISTOR	470	1/16W
R884	NRSA63D-471X	M.G.RESISTOR	470	1/16W
R885	NRSA63D-471X	M.G.RESISTOR	470	1/16W
R886	NRSA63D-471X	M.G.RESISTOR	470	1/16W
R887	NRSA63D-471X	M.G.RESISTOR	470	1/16W
R888	NRSA63D-471X	M.G.RESISTOR	470	1/16W
R889	NRSA63D-471X	M.G.RESISTOR	470	1/16W
R890	NRSA63D-471X	M.G.RESISTOR	470	1/16W
R891	NRSA63D-471X	M.G.RESISTOR	470	1/16W
R892	NRSA63D-471X	M.G.RESISTOR	470	1/16W
R893	NRSA63D-471X	M.G.RESISTOR	470	1/16W
R901	NRSA63D-223X	M.G.RESISTOR	22k	1/16W
R908	NRSA63D-101X	M.G.RESISTOR	100	1/16W
R911	NRSA63D-682X	M.G.RESISTOR	6.8k	1/16W
R912	NRSA63D-562X	M.G.RESISTOR	5.6k	1/16W
R913	NRSA63D-333X	M.G.RESISTOR	33k	1/16W
R914	NRSA63D-333X	M.G.RESISTOR	33k	1/16W
R915	NRSA63D-333X	M.G.RESISTOR	33k	1/16W
R916	NRSA63D-563X	M.G.RESISTOR	56k	1/16W
R917	NRSA63D-562X	M.G.RESISTOR	5.6k	1/16W
R918	NRSA63D-471X	M.G.RESISTOR	470	1/16W
R919	NRSA63D-472X	M.G.RESISTOR	4.7k	1/16W
R921	NRSA63D-472X	M.G.RESISTOR	4.7k	1/16W
R922	NRSA63D-102X	M.G.RESISTOR	1k	1/16W
R923	NRSA63D-472X	M.G.RESISTOR	4.7k	1/16W
R924	NRSA63D-223X	M.G.RESISTOR	22k	1/16W
R925	NRSA63D-222X	M.G.RESISTOR	2.2k	1/16W
R926	NRSA63D-560X	M.G.RESISTOR	56	1/16W
R927	NRSA63D-101X	M.G.RESISTOR	100	1/16W
R929	NRSA63D-222X	M.G.RESISTOR	2.2k	1/16W
R930	NRSA63D-474X	M.G.RESISTOR	470k	1/16W
R931	NRSA63D-222X	M.G.RESISTOR	2.2k	1/16W
R932	NRSA63D-103X	M.G.RESISTOR	10k	1/16W
R933	NRSA63D-101X	M.G.RESISTOR	100	1/16W
R934	NRSA63D-101X	M.G.RESISTOR	100	1/16W
R935	NRSA63D-101X	M.G.RESISTOR	100	1/16W
R937	NRSA63D-562X	M.G.RESISTOR	5.6k	1/16W
R938	NRSA63D-101X	M.G.RESISTOR	100	1/16W
R939	NRSA63D-222X	M.G.RESISTOR	2.2k	1/16W
R940	NRSA63D-102X	M.G.RESISTOR	1k	1/16W
R941	NRSA63D-473X	M.G.RESISTOR	47k	1/16W
R942	NRSA63D-473X	M.G.RESISTOR	47k	1/16W
R943	NRSA63D-100X	M.G.RESISTOR	10	1/16W
R945	NRSA63J-0R0X	M.G.RESISTOR	0	1/16W
R946	NRSA63J-0R0X	M.G.RESISTOR	0	1/16W
VR801	NVP1313-502X	TRIM.RESISTOR	5k	CHROMA
C101	NCB31CK-104X	CER.CAPACITOR	0.1	16V
C102	NCB31CK-473X	CER.CAPACITOR	0.047	16V
C103	NCB31CK-473X	CER.CAPACITOR	0.047	16V
C104	NCB10JM-335X	CER.CAPACITOR	3.3	6.3V
C105	NCB10JM-335X	CER.CAPACITOR	3.3	6.3V
C106	NCB10JM-335X	CER.CAPACITOR	3.3	6.3V
C107	NCB10JM-335X	CER.CAPACITOR	3.3	6.3V
C108	NCB31CK-473X	CER.CAPACITOR	0.047	16V
C109	NCB31CK-473X	CER.CAPACITOR	0.047	16V
C110	NCB31CK-473X	CER.CAPACITOR	0.047	16V
C111	NCB11CK-105X	CER.CAPACITOR	1	16V
C112	NCB11CK-105X	CER.CAPACITOR	1	16V
C113	NCB31CK-473X	CER.CAPACITOR	0.047	16V
C115	NCB31CK-473X	CER.CAPACITOR	0.047	16V
C116	NCB31CK-473X	CER.CAPACITOR	0.047	16V

Symbol No.	Part No.	Part Name	Description	
C117	NCB31CK-473X	CER.CAPACITOR	0.047	16V
C120	NCB31CK-473X	CER.CAPACITOR	0.047	16V
C121	NCB31CK-473X	CER.CAPACITOR	0.047	16V
C122	NCB31CK-473X	CER.CAPACITOR	0.047	16V
C123	NCB31CK-473X	CER.CAPACITOR	0.047	16V
C124	NDC31HJ-681X	CER.CAPACITOR	680p	50V
C125	NCB31CK-473X	CER.CAPACITOR	0.047	16V
C126	NCB31CK-473X	CER.CAPACITOR	0.047	16V
C127	NCB31CK-473X	CER.CAPACITOR	0.047	16V
C128	NCB31CK-473X	CER.CAPACITOR	0.047	16V
C129	NCB31CK-473X	CER.CAPACITOR	0.047	16V
C130	NBE21EM-105X	TAN.CAPACITOR	1	25V
C131	NCB31CK-473X	CER.CAPACITOR	0.047	16V
C132	NCB31CK-473X	CER.CAPACITOR	0.047	16V
C133	NBE21EM-105X	TAN.CAPACITOR	1	25V
C135	NCB31CK-473X	CER.CAPACITOR	0.047	16V
C136	NCB31CK-473X	CER.CAPACITOR	0.047	16V
C138	NCB31CK-473X	CER.CAPACITOR	0.047	16V
C139	NCB31CK-473X	CER.CAPACITOR	0.047	16V
C140	NCB31CK-473X	CER.CAPACITOR	0.047	16V
C142	NCB31CK-473X	CER.CAPACITOR	0.047	16V
C143	NCB31CK-473X	CER.CAPACITOR	0.047	16V
C144	NBE21EM-105X	TAN.CAPACITOR	1	25V
C145	NCB11CK-105X	CER.CAPACITOR	1	16V
C146	SVC341/L/-X	VARI CAPA DIODE	SANYO	
C148	NCB31CK-473X	CER.CAPACITOR	0.047	16V
C149	NCB31CK-473X	CER.CAPACITOR	0.047	16V
C182	NCB31CK-473X	CER.CAPACITOR	0.047	16V
C455	NCB31CK-473X	CER.CAPACITOR	0.047	16V
C456	NCB11CK-105X	CER.CAPACITOR	1	16V
C458	NCB31CK-473X	CER.CAPACITOR	0.047	16V
C459	NCB31CK-473X	CER.CAPACITOR	0.047	16V
C467	NCB31CK-473X	CER.CAPACITOR	0.047	16V
C468	NCB31CK-473X	CER.CAPACITOR	0.047	16V
C469	NBE21CM-475X	TAN.CAPACITOR	4.7	16V
C481	NBE21CM-475X	TAN.CAPACITOR	4.7	16V
C482	NCB31CK-473X	CER.CAPACITOR	0.047	16V
C483	NCB31CK-473X	CER.CAPACITOR	0.047	16V
C484	NCB31CK-473X	CER.CAPACITOR	0.047	16V
C485	NCB31CK-473X	CER.CAPACITOR	0.047	16V
C486	NCB31CK-473X	CER.CAPACITOR	0.047	16V
C487	NCB31CK-473X	CER.CAPACITOR	0.047	16V
C488	NCB31CK-473X	CER.CAPACITOR	0.047	16V
C489	NDC31HJ-151X	CER.CAPACITOR	150p	50V
C490	NCB31CK-473X	CER.CAPACITOR	0.047	16V
C555	NCB31CK-473X	CER.CAPACITOR	0.047	16V
C556	NCB11CK-105X	CER.CAPACITOR	1	16V
C567	NCB31CK-473X	CER.CAPACITOR	0.047	16V
C568	NCB31CK-473X	CER.CAPACITOR	0.047	16V
C569	NBE21CM-475X	TAN.CAPACITOR	4.7	16V
C581	NBE21CM-475X	TAN.CAPACITOR	4.7	16V
C582	NCB31CK-473X	CER.CAPACITOR	0.047	16V
C583	NCB31CK-473X	CER.CAPACITOR	0.047	16V
C584	NCB31CK-473X	CER.CAPACITOR	0.047	16V
C585	NCB31CK-473X	CER.CAPACITOR	0.047	16V
C586	NCB31CK-473X	CER.CAPACITOR	0.047	16V
C587	NCB31CK-473X	CER.CAPACITOR	0.047	16V
C588	NCB31CK-473X	CER.CAPACITOR	0.047	16V
C589	NDC31HJ-151X	CER.CAPACITOR	150p	50V
C590	NCB31CK-473X	CER.CAPACITOR	0.047	16V
C655	NCB31CK-473X	CER.CAPACITOR	0.047	16V
C656	NCB11CK-105X	CER.CAPACITOR	1	16V
C657	NCB31CK-473X	CER.CAPACITOR	0.047	16V
C658	NCB31CK-473X	CER.CAPACITOR	0.047	16V
C667	NCB31CK-473X	CER.CAPACITOR	0.047	16V
C668	NCB31CK-473X	CER.CAPACITOR	0.047	16V
C669	NBE21CM-475X	TAN.CAPACITOR	4.7	16V
C681	NBE21CM-475X	TAN.CAPACITOR	4.7	16V
C682	NCB31CK-473X	CER.CAPACITOR	0.047	16V
C683	NCB31CK-473X	CER.CAPACITOR	0.047	16V
C684	NCB31CK-473X	CER.CAPACITOR	0.047	16V
C685	NCB31CK-473X	CER.CAPACITOR	0.047	16V
C686	NCB31CK-473X	CER.CAPACITOR	0.047	16V

Symbol No.	Part No.	Part Name	Description	
C687	NCB31CK-473X	CER.CAPACITOR	0.047	16V
C688	NCB31CK-473X	CER.CAPACITOR	0.047	16V
C689	NDC31HJ-151X	CER.CAPACITOR	150p	50V
C690	NCB31CK-473X	CER.CAPACITOR	0.047	16V
C692	NBE71CM-476X	TAN.CAPACITOR	47	16V
C693	NCB31CK-473X	CER.CAPACITOR	0.047	16V
C694	NCB31CK-473X	CER.CAPACITOR	0.047	16V
C696	NCB31CK-473X	CER.CAPACITOR	0.047	16V
C698	NCB31CK-473X	CER.CAPACITOR	0.047	16V
C701	NEH91HM-335X	E.CAPACITOR	3.3	50V
C702	NCB31CK-223X	CER.CAPACITOR	0.022	16V
C703	NDC31HJ-101X	CER.CAPACITOR	100p	50V
C704	NEX21AM-106X	E.CAPACITOR	10	10V
C705	NCB31CK-473X	CER.CAPACITOR	0.047	16V
C706	NCB31CK-473X	CER.CAPACITOR	0.047	16V
C707	NEH91HM-335X	E.CAPACITOR	3.3	50V
C708	NBE21EM-105X	TAN.CAPACITOR	1	25V
C709	NCB11CK-105X	CER.CAPACITOR	1	16V
C711	NEH91HM-335X	E.CAPACITOR	3.3	50V
C713	NDC31HJ-101X	CER.CAPACITOR	100p	50V
C714	NEX21AM-106X	E.CAPACITOR	10	10V
C715	NEH91HM-335X	E.CAPACITOR	3.3	50V
C716	NEH91HM-335X	E.CAPACITOR	3.3	50V
C717	NEH91HM-335X	E.CAPACITOR	3.3	50V
C750	NBE21CM-475X	TAN.CAPACITOR	4.7	16V
C751	NBQD1AM-686X	TAN.CAPACITOR	68	10V
C752	NBE21CM-475X	TAN.CAPACITOR	4.7	16V
C753	NBQD1AM-686X	TAN.CAPACITOR	68	10V
C754	NBE21CM-475X	TAN.CAPACITOR	4.7	16V
C755	NBE21EM-105X	TAN.CAPACITOR	1	25V
C756	NCB31CK-473X	CER.CAPACITOR	0.047	16V
C758	NBE21CM-475X	TAN.CAPACITOR	4.7	16V
C759	NCB11CK-105X	CER.CAPACITOR	1	16V
C761	NBSH1AM-227X	TAN.CAPACITOR	220	10V
C762	NCB31CK-473X	CER.CAPACITOR	0.047	16V
C763	NDC31HJ-101X	CER.CAPACITOR	100p	50V
C801	NCB31CK-473X	CER.CAPACITOR	0.047	16V
C802	NCB31CK-473X	CER.CAPACITOR	0.047	16V
C803	NCB31CK-473X	CER.CAPACITOR	0.047	16V
C804	NCB10JM-335X	CER.CAPACITOR	3.3	6.3V
C805	NCB31CK-473X	CER.CAPACITOR	0.047	16V
C806	NCB31CK-473X	CER.CAPACITOR	0.047	16V
C807	NCB31CK-473X	CER.CAPACITOR	0.047	16V
C808	NCB31CK-473X	CER.CAPACITOR	0.047	16V
C809	NCB31CK-473X	CER.CAPACITOR	0.047	16V
C810	NCB31CK-473X	CER.CAPACITOR	0.047	16V
C811	NCB31CK-473X	CER.CAPACITOR	0.047	16V
C812	NCB31CK-473X	CER.CAPACITOR	0.047	16V
C813	NCB10JM-335X	CER.CAPACITOR	3.3	6.3V
C814	NCB31CK-473X	CER.CAPACITOR	0.047	16V
C815	NCB31CK-473X	CER.CAPACITOR	0.047	16V
C816	NCB31CK-473X	CER.CAPACITOR	0.047	16V
C817	NCB31CK-473X	CER.CAPACITOR	0.047	16V
C819	NCB31CK-473X	CER.CAPACITOR	0.047	16V
C820	NCB31CK-473X	CER.CAPACITOR	0.047	16V
C821	NBQD1AM-686X	TAN.CAPACITOR	68	10V
C822	NCB31CK-473X	CER.CAPACITOR	0.047	16V
C823	NCB31CK-473X	CER.CAPACITOR	0.047	16V
C824	NCB31CK-104X	CER.CAPACITOR	0.1	16V
C825	NCB31CK-473X	CER.CAPACITOR	0.047	16V
C826	NBE21CM-475X	TAN.CAPACITOR	4.7	16V
C827	NCB31CK-473X	CER.CAPACITOR	0.047	16V
C828	NCB31CK-473X	CER.CAPACITOR	0.047	16V
C829	NBE21CM-475X	TAN.CAPACITOR	4.7	16V
C836	NCB31CK-473X	CER.CAPACITOR	0.047	16V
C837	NCB31CK-473X	CER.CAPACITOR	0.047	16V
C838	NCB31CK-473X	CER.CAPACITOR	0.047	16V
C839	NCB31CK-473X	CER.CAPACITOR	0.047	16V
C840	NDC31HJ-100X	CER.CAPACITOR	10p	50V
C841	NDC31HJ-180X	CER.CAPACITOR	18p	50V
C842	NDC31HJ-100X	CER.CAPACITOR	10p	50V
C844	NCB31CK-473X	CER.CAPACITOR	0.047	16V

Symbol No.	Part No.	Part Name	Description	
C845	NCB31CK-473X	CER.CAPACITOR	0.047	16V
C846	NCB31CK-473X	CER.CAPACITOR	0.047	16V
C847	NCB31CK-473X	CER.CAPACITOR	0.047	16V
C848	NDC31HJ-100X	CER.CAPACITOR	10p	50V
C849	NDC31HJ-180X	CER.CAPACITOR	18p	50V
C850	NDC31HJ-100X	CER.CAPACITOR	10p	50V
C852	NCB31CK-473X	CER.CAPACITOR	0.047	16V
C853	NCB31CK-473X	CER.CAPACITOR	0.047	16V
C854	NBE21CM-475X	TAN.CAPACITOR	4.7	16V
C855	NCB31CK-473X	CER.CAPACITOR	0.047	16V
C856	NCB31CK-473X	CER.CAPACITOR	0.047	16V
C857	NCB31CK-473X	CER.CAPACITOR	0.047	16V
C858	NCB31CK-473X	CER.CAPACITOR	0.047	16V
C859	NBE21CM-475X	TAN.CAPACITOR	4.7	16V
C860	NDC31HJ-470X	CER.CAPACITOR	47p	50V
C863	NCB31CK-473X	CER.CAPACITOR	0.047	16V
C864	NBE21CM-475X	TAN.CAPACITOR	4.7	16V
C866	NCB31CK-473X	CER.CAPACITOR	0.047	16V
C867	NCB31CK-473X	CER.CAPACITOR	0.047	16V
C901	NCB31CK-473X	CER.CAPACITOR	0.047	16V
C902	NBE21CM-475X	TAN.CAPACITOR	4.7	16V
C903	NCB31CK-473X	CER.CAPACITOR	0.047	16V
C914	NCB31CK-473X	CER.CAPACITOR	0.047	16V
C915	NBE21CM-475X	TAN.CAPACITOR	4.7	16V
C916	NCB31CK-473X	CER.CAPACITOR	0.047	16V
C917	NDC31HJ-100X	CER.CAPACITOR	10p	50V
C918	NCB31CK-473X	CER.CAPACITOR	0.047	16V
C919	NCB31CK-473X	CER.CAPACITOR	0.047	16V
C920	NCB31CK-473X	CER.CAPACITOR	0.047	16V
C921	NCB31CK-473X	CER.CAPACITOR	0.047	16V
C922	NCB31CK-473X	CER.CAPACITOR	0.047	16V
C924	NBE21CM-475X	TAN.CAPACITOR	4.7	16V
C925	NCB31CK-473X	CER.CAPACITOR	0.047	16V
C926	NCB31CK-473X	CER.CAPACITOR	0.047	16V
C927	NCB31CK-473X	CER.CAPACITOR	0.047	16V
C928	NCB31CK-473X	CER.CAPACITOR	0.047	16V
C929	NCB31CK-473X	CER.CAPACITOR	0.047	16V
C930	NCB11CK-105X	CER.CAPACITOR	1	16V
C931	NCB31CK-473X	CER.CAPACITOR	0.047	16V
C932	NBE21CM-475X	TAN.CAPACITOR	4.7	16V
C933	NCB31CK-473X	CER.CAPACITOR	0.047	16V
C934	NCB31CK-473X	CER.CAPACITOR	0.047	16V
L804	NQL054K-150X	COIL	15uH	
L805	NQL054K-150X	COIL	15uH	
L807	NQL054K-150X	COIL	15uH	
L808	NQL054K-150X	COIL	15uH	
LC101	NQR0122-001X	LC FILTER		
LC102	EXC-CET471U	LC FILTER		
LC750	EXC-CET471U	LC FILTER		
LC752	EXC-CET471U	LC FILTER		
LC754	EXC-CET471U	LC FILTER		
LC801	EXC-CET471U	LC FILTER		
LC802	EXC-CET471U	LC FILTER		
X101	QAX0124-002	CRYSTAL	27MHz	
CN1	QGB0805M3-60X	CONNECTOR	60PIN	
CN2	QGB0805M3-60X	CONNECTOR	60PIN	
CN3	QGF0508F1-33X	CONNECTOR	33PIN	
CN4	QGF0508F1-30X	CONNECTOR	30PIN	
CN5	QGA1201F2-04X	CONNECTOR	4PIN	
CN21	QGF0508F2-50X	CONNECTOR	50PIN	
CN22	QGA1201F2-06X	CONNECTOR	6PIN	
CN32	QGA1201C2-06X	CONNECTOR	6PIN	
CN33	QGA1201F2-03X	CONNECTOR	3PIN	
CN34	QGA1501F2-04W	CONNECTOR	4PIN	
CN46	QGA1501F2-03W	CONNECTOR	3PIN	
K901	SCV2732-2HM471	FERRITE BEADS		
K902	SCV2732-2HM471	FERRITE BEADS		
K903	SCV2732-2HM471	FERRITE BEADS		
K904	SCV2732-2HM471	FERRITE BEADS		
K905	SCV2732-2HM471	FERRITE BEADS		

6.12 PS1 BOARD ASSEMBLY PARTS LIST [1][7]

SCK2609-01-01B [1][7]□□□□□□□

Symbol No.	Part No.	Part Name	Description	
IC201	LM2598S-ADJ-X	I.C.(M)	NATIONAL SEMICO	
IC202	LM2598S-ADJ-X	I.C.(M)	NATIONAL SEMICO	
IC203	LM2598S-ADJ-X	I.C.(M)	NATIONAL SEMICO	
IC206	LM2597M-ADJ-X	I.C.(M)	NATIONAL SEMICO	
Q211	DTC124EUA-X	TRANSISTOR	ROHM	
Q212	DTC124EUA-X	TRANSISTOR	ROHM	
Q213	DTC124EUA-X	TRANSISTOR	ROHM	
Q214	DTA124EUA-X	TRANSISTOR	ROHM	
Q215	DTC124EUA-X	TRANSISTOR	ROHM	
Q217	DTA124EUA-X	TRANSISTOR	ROHM	
Q218	DTC124EUA-X	TRANSISTOR	ROHM	
D201	RB050L-40-X	SB DIODE	ROHM	
D202	RB050L-40-X	SB DIODE	ROHM	
D203	MA736-X	DIODE	MATSUSHITA	
D204	MA736-X	DIODE	MATSUSHITA	
D207	MA736-X	DIODE	MATSUSHITA	
D208	MA736-X	DIODE	MATSUSHITA	
R201	NRSA63D-392X	M.G.RESISTOR	3.9k	1/16W
R202	NRSA63D-122X	M.G.RESISTOR	1.2k	1/16W
R204	NRSA63D-182X	M.G.RESISTOR	1.8k	1/16W
R205	NRSA63D-102X	M.G.RESISTOR	1k	1/16W
R207	NRSA63D-392X	M.G.RESISTOR	3.9k	1/16W
R208	NRSA63D-222X	M.G.RESISTOR	2.2k	1/16W
R209	NRSA63D-272X	M.G.RESISTOR	2.7k	1/16W
R218	NRSA63D-822X	M.G.RESISTOR	8.2k	1/16W
R219	NRSA63D-102X	M.G.RESISTOR	1k	1/16W
R220	NRSA63D-121X	M.G.RESISTOR	120	1/16W
C201	QTX81EM-336	OS CAPACITOR	33	25V
C202	NBSH1AM-227X	TAN.CAPACITOR	220	10V
C203	NBSH1AM-227X	TAN.CAPACITOR	220	10V
C204	NCB31CK-104X	CER.CAPACITOR	0.1	16V
C205	NCB31EK-103X	CER.CAPACITOR	0.01	25V
C207	QTX81EM-336	OS CAPACITOR	33	25V
C208	NBSH0JM-337X	TAN.CAPACITOR	330	6.3V
C209	NBSH0JM-337X	TAN.CAPACITOR	330	6.3V
C210	NCB31CK-104X	CER.CAPACITOR	0.1	16V
C211	NCB31EK-103X	CER.CAPACITOR	0.01	25V
C213	QTX81EM-336	OS CAPACITOR	33	25V
C214	NBSH1AM-227X	TAN.CAPACITOR	220	10V
C217	NCB31CK-473X	CER.CAPACITOR	0.047	16V
C225	QEX41FM-106	E.CAPACITOR	10	31.5V
C226	NEX31CM-686X	E.CAPACITOR	68	16V
C227	NEX31CM-686X	E.CAPACITOR	68	16V
C228	NCB31CK-104X	CER.CAPACITOR	0.1	16V
C229	NCB31CK-104X	CER.CAPACITOR	0.1	16V
C253	NCB31CK-104X	CER.CAPACITOR	0.1	16V
C255	QTX81EM-336	OS CAPACITOR	33	25V
L202	NQL47CM-680X	COIL	68uH	
L203	NQL29CM-680X	COIL	68uH	
L204	NQL46CM-470X	COIL	47uH	
L205	NQL44CM-3R3X	COIL	3.3uH	
L206	NQL47CM-151X	COIL	150uH	
L207	NQL29CM-680X	COIL	68uH	
L212	NQL44CM-470X	COIL	47uH	
L213	NQL03FK-151X	COIL	150uH	
L214	NQL29CM-150X	COIL	15uH	
CN44	QGB0805L2-30X	CONNECTOR	30PIN	

6.13 PS2 BOARD ASSEMBLY PARTS LIST [1][8]

SCK2609-02-01B [1][8]□□□□□□□

Symbol No.	Part No.	Part Name	Description	
IC204	MAX771ESA-X	I.C.(M)	MAXIM	
IC205	MAX772ESA-X	I.C.(M)	MAXIM	
IC211	NJM78L05UA-X	I.C.(M)	JRC	
IC212	TC7SH04FU-X	I.C.(M)	TOSHIBA	
IC213	TC74VHC08FT-X	I.C.(M)	TOSHIBA	
IC214	TC7S02FU-X	I.C.(M)	TOSHIBA	
IC215	TC7SH32FU-X	I.C.(M)	TOSHIBA	
Q201	HAT2020R-X	TRANSISTOR	HITACHI	
Q202	HAT2020R-X	TRANSISTOR	HITACHI	
Q216	DTA124EUA-X	TRANSISTOR	ROHM	
Q221	2SB1073/PQ/-X	TRANSISTOR	MATSUSHITA	
Q222	2SC4626/BC/-X	TRANSISTOR	MATSUSHITA	
Q231	DTA124EUA-X	TRANSISTOR	ROHM	
Q232	DTC124EUA-X	TRANSISTOR	ROHM	
Q235	2SC4626/BC/-X	TRANSISTOR	MATSUSHITA	
Q236	2SC4626/BC/-X	TRANSISTOR	MATSUSHITA	
Q238	2SC4626/BC/-X	TRANSISTOR	MATSUSHITA	
Q239	HAT2020R-X	TRANSISTOR	HITACHI	
Q240	DTA124EUA-X	TRANSISTOR	ROHM	
Q241	DTC124EUA-X	TRANSISTOR	ROHM	
Q250	2SC4626/BC/-X	TRANSISTOR	MATSUSHITA	
Q251	2SC4626/BC/-X	TRANSISTOR	MATSUSHITA	
D205	MA736-X	DIODE	MATSUSHITA	
D206	MA736-X	DIODE	MATSUSHITA	
R210	NRZ0055-R39X	M.F.RESISTOR	0.39	1W
R211	NRSA63D-473X	M.G.RESISTOR	47k	1/16W
R212	NRSA63D-562X	M.G.RESISTOR	5.6k	1/16W
R213	NRSA63D-103X	M.G.RESISTOR	10k	1/16W
R214	NRZ0055-R39X	M.F.RESISTOR	0.39	1W
R215	NRSA63D-104X	M.G.RESISTOR	100k	1/16W
R216	NRSA63D-183X	M.G.RESISTOR	18k	1/16W
R217	NRSA63D-103X	M.G.RESISTOR	10k	1/16W
R221	NRSA02J-3R3X	M.G.RESISTOR	3.3	1/10W
R222	NRSA02J-3R3X	M.G.RESISTOR	3.3	1/10W
R223	NRSA02J-3R3X	M.G.RESISTOR	3.3	1/10W
R224	NRSA02J-100X	M.G.RESISTOR	10	1/10W
R225	NRSA02J-100X	M.G.RESISTOR	10	1/10W
R226	NRSA02J-220X	M.G.RESISTOR	22	1/10W
R227	NRSA02J-220X	M.G.RESISTOR	22	1/10W
R231	NRSA63D-103X	M.G.RESISTOR	10k	1/16W
R232	NRSA63D-152X	M.G.RESISTOR	1.5k	1/16W
R233	NRSA63D-223X	M.G.RESISTOR	22k	1/16W
R234	NRSA63D-223X	M.G.RESISTOR	22k	1/16W
R241	NRSA63D-223X	M.G.RESISTOR	22k	1/16W
R242	NRSA63D-682X	M.G.RESISTOR	6.8k	1/16W
R243	NRSA63D-333X	M.G.RESISTOR	33k	1/16W
R244	NRSA63D-682X	M.G.RESISTOR	6.8k	1/16W
R245	NRSA63D-223X	M.G.RESISTOR	22k	1/16W
R246	NRSA63D-683X	M.G.RESISTOR	68k	1/16W
R247	NRSA63D-682X	M.G.RESISTOR	6.8k	1/16W
R248	NRSA63D-223X	M.G.RESISTOR	22k	1/16W
R249	NRSA63D-223X	M.G.RESISTOR	22k	1/16W
R252	NRSA63D-223X	M.G.RESISTOR	22k	1/16W
R253	NRSA63D-223X	M.G.RESISTOR	22k	1/16W
R261	NRSA63D-223X	M.G.RESISTOR	22k	1/16W
R262	NRSA63D-223X	M.G.RESISTOR	22k	1/16W
R263	NRSA63D-682X	M.G.RESISTOR	6.8k	1/16W
R300	NRSA63D-102X	M.G.RESISTOR	1k	1/16W
R301	NRSA63D-104X	M.G.RESISTOR	100k	1/16W
R302	NRSA63D-103X	M.G.RESISTOR	10k	1/16W
R303	NRSA63D-473X	M.G.RESISTOR	47k	1/16W
R304	NRSA63D-101X	M.G.RESISTOR	100	1/16W
C219	NBSG1CM-476X	TAN.CAPACITOR	47	16V
C220	NBSG1CM-476X	TAN.CAPACITOR	47	16V
C221	NCB31CK-104X	CER.CAPACITOR	0.1	16V
C222	QEX41EM-476	E.CAPACITOR	47	25V
C223	QEX41EM-476	E.CAPACITOR	47	25V
C224	NCB31CK-104X	CER.CAPACITOR	0.1	16V

Symbol No.	Part No.	Part Name	Description	
C231	NBSH1AM-227X	TAN.CAPACITOR	220	10V
C232	NBSG1CM-476X	TAN.CAPACITOR	47	16V
C233	NCB31CK-104X	CER.CAPACITOR	0.1	16V
C234	NCB31CK-104X	CER.CAPACITOR	0.1	16V
C242	QTX81EM-685	OS CAPACITOR	6.8	25V
C243	NCB21AK-105X	CER.CAPACITOR	1	10V
C244	NBE71CM-476X	TAN.CAPACITOR	47	16V
C251	NCB21EK-104X	CER.CAPACITOR	0.1	25V
C256	QTX81EM-336	OS CAPACITOR	33	25V
C257	QTX81EM-336	OS CAPACITOR	33	25V
C258	NBSG1CM-476X	TAN.CAPACITOR	47	16V
C259	NBSG1CM-476X	TAN.CAPACITOR	47	16V
C260	NBSG1CM-476X	TAN.CAPACITOR	47	16V
C261	NBSG1CM-476X	TAN.CAPACITOR	47	16V
C262	NBSG1CM-476X	TAN.CAPACITOR	47	16V
C263	NBSG1CM-476X	TAN.CAPACITOR	47	16V
L201	NQL47CM-220X	COIL	22uH	
L208	NQL47CM-221X	COIL	220uH	
L210	NQL47CM-221X	COIL	220uH	
TH201	NAD0024-001X	THERMISTOR		
TH202	NAD0024-001X	THERMISTOR		
TH203	NAD0024-001X	THERMISTOR		
TH204	NAD0024-001X	THERMISTOR		
TH205	NAD0024-001X	THERMISTOR		
TH206	NAD0024-001X	THERMISTOR		
TH207	NAD0026-001X	THERMISTOR		
TH208	NAD0024-003X	THERMISTOR		
TH209	NAD0024-003X	THERMISTOR		
TH210	NAD0024-001X	THERMISTOR		
CN41	QGA2001C2-05X	CONNECTOR	5PIN	
CN43	QGA1201F2-04X	CONNECTOR	4PIN	
CN44	QGB0805M3-30X	CONNECTOR	30PIN	
CN45	QGA1201F2-15X	CONNECTOR	15PIN	
CN46	QGA1201C2-03X	CONNECTOR	3PIN	
CN144	QGB0805K1-30X	CONNECTOR	30PIN	

6.14 ROM BOARD ASSEMBLY PARTS LIST [1][9]

SCK2607-01-00B [1][9]□□□□□□□

Symbol No.	Part No.	Part Name	Description	
SK902	SCV2768-001X	IC SOCKET		
IC902	PLSC1278	I.C.(M)	MBM29F002T-70PD	
IC1901	TC74VHC165FT-X	I.C.(M)	TOSHIBA	
R1901	NRSA63J-223X	M.G.RESISTOR	22k	1/16W
R1902	NRSA63J-223X	M.G.RESISTOR	22k	1/16W
R1903	NRSA63J-223X	M.G.RESISTOR	22k	1/16W
R1904	NRSA63J-223X	M.G.RESISTOR	22k	1/16W
R1905	NRSA63J-223X	M.G.RESISTOR	22k	1/16W
R1906	NRSA63J-223X	M.G.RESISTOR	22k	1/16W
R1907	NRSA63J-223X	M.G.RESISTOR	22k	1/16W
R1908	NRSA63J-223X	M.G.RESISTOR	22k	1/16W
C920	NBE41CM-106X	TAN.CAPACITOR	10	16V
C921	NCB31CK-473X	CER.CAPACITOR	0.047	16V
C922	NCB31CK-473X	CER.CAPACITOR	0.047	16V
S901	NSW0022-004X	DIP SWITCH		
CN24	QGB0805L1-40X	CONNECTOR	40PIN	

6.15 JOG BOARD ASSEMBLY PARTS LIST [2][0]

SCK2607-02-00B [2][0]□□□□□□□

Symbol No.	Part No.	Part Name	Description	
IC951	TC7S14FU-X	I.C.(M)	TOSHIBA	
IC952	TC7SH00FU-X	I.C.(M)	TOSHIBA	
IC953	TC7SU04FU-X	I.C.(M)	TOSHIBA	
IC954	TC7W74FU-X	I.C.(M)	TOSHIBA	
IC955	TC7S14FU-X	I.C.(M)	TOSHIBA	
IC956	TC7S08FU-X	I.C.(M)	TOSHIBA	
R951	NRSA63J-223X	M.G.RESISTOR	22k	1/16W
R952	NRSA63J-103X	M.G.RESISTOR	10k	1/16W
R953	NRSA63J-103X	M.G.RESISTOR	10k	1/16W
R954	NRSA63J-103X	M.G.RESISTOR	10k	1/16W
R955	NRSA63J-101X	M.G.RESISTOR	100	1/16W
R956	NRSA63J-101X	M.G.RESISTOR	100	1/16W
R957	NRSA63J-103X	M.G.RESISTOR	10k	1/16W
R958	NRSA63J-0R0X	M.G.RESISTOR	0	1/16W
R960	NRSA63J-101X	M.G.RESISTOR	100	1/16W
R962	NRSA63J-101X	M.G.RESISTOR	100	1/16W
C951	NCB31HK-103X	CER.CAPACITOR	0.01	50V
C952	NCB31HK-103X	CER.CAPACITOR	0.01	50V
C953	NCB31CK-473X	CER.CAPACITOR	0.047	16V
C954	NCB31CK-473X	CER.CAPACITOR	0.047	16V
C955	NCB31CK-473X	CER.CAPACITOR	0.047	16V
C956	NCB31CK-473X	CER.CAPACITOR	0.047	16V
C957	NCB31CK-473X	CER.CAPACITOR	0.047	16V
C958	NCB31CK-473X	CER.CAPACITOR	0.047	16V
C959	NCB31CK-473X	CER.CAPACITOR	0.047	16V
C960	NBE41CM-106X	TAN.CAPACITOR	10	16V
C961	NCB31CK-473X	CER.CAPACITOR	0.047	16V
S951	NSW0010-001X	SWITCH	STATUS/MENU	
S952	QSW0603-001	ROTARY SWITCH	SHUTTER/MENU	
CN38	QGA1201F2-06X	CONNECTOR	6PIN	

6.16 IF BOARD ASSEMBLY PARTS LIST [2][1]

SCK2607-03-00B [2][1]□□□□□□□

Symbol No.	Part No.	Part Name	Description	
IC301	M62353GP-X	I.C.(M)	MITSUBISHI	
IC302	TA75S01F-X	I.C.(M)	TOSHIBA	
IC303	TC7W66FU-X	I.C.(M)	TOSHIBA	
D301	MA143A-X	DIODE	MATSUSHITA	
D302	MA143A-X	DIODE	MATSUSHITA	
D303	MA143A-X	DIODE	MATSUSHITA	
D304	MA143A-X	DIODE	MATSUSHITA	
D305	MA143A-X	DIODE	MATSUSHITA	
D306	MA143A-X	DIODE	MATSUSHITA	
D307	MA143A-X	DIODE	MATSUSHITA	
D308	MA143A-X	DIODE	MATSUSHITA	
D309	HZM18NB2-X	ZENER DIODE	HITACHI	
R301	NRSA63J-103X	M.G.RESISTOR	10k	1/16W
R302	NRSA63J-104X	M.G.RESISTOR	100k	1/16W
R303	NRSA63J-334X	M.G.RESISTOR	330k	1/16W
R304	NRSA63J-124X	M.G.RESISTOR	120k	1/16W
R305	NRSA63J-101X	M.G.RESISTOR	100	1/16W
R306	NRSA63J-104X	M.G.RESISTOR	100k	1/16W
R311	NRSA63J-101X	M.G.RESISTOR	100	1/16W
R312	NRSA63J-101X	M.G.RESISTOR	100	1/16W
R313	NRSA63J-101X	M.G.RESISTOR	100	1/16W
R315	NRSA63J-101X	M.G.RESISTOR	100	1/16W
R316	NRSA63J-101X	M.G.RESISTOR	100	1/16W
R317	NRSA63J-102X	M.G.RESISTOR	1k	1/16W
R318	NRSA63J-101X	M.G.RESISTOR	100	1/16W
R320	NRSA63J-102X	M.G.RESISTOR	1k	1/16W
R321	NRSA63J-102X	M.G.RESISTOR	1k	1/16W
R322	NRSA63J-102X	M.G.RESISTOR	1k	1/16W
R323	NRSA63J-102X	M.G.RESISTOR	1k	1/16W
C301	NBE41CM-106X	TAN.CAPACITOR	10	16V
C302	NBE51VM-475X	TAN.CAPACITOR	4.7	35V
C303	NBE41CM-106X	TAN.CAPACITOR	10	16V
C304	NCB31CK-473X	CER.CAPACITOR	0.047	16V
C305	NCB31CK-473X	CER.CAPACITOR	0.047	16V
C306	NCB31CK-473X	CER.CAPACITOR	0.047	16V
C307	NCB31CK-473X	CER.CAPACITOR	0.047	16V
C308	NCB31CK-473X	CER.CAPACITOR	0.047	16V
C310	NEH91EM-106X	E.CAPACITOR	10	25V
C312	NCB31CK-473X	CER.CAPACITOR	0.047	16V
C313	NCB31CK-473X	CER.CAPACITOR	0.047	16V
C314	NCB31CK-473X	CER.CAPACITOR	0.047	16V
C315	NCB31CK-473X	CER.CAPACITOR	0.047	16V
CN23	QGF0508C1-30W	CONNECTOR	30PIN	
CN31	QGA1201C2-10X	CONNECTOR	10PIN	
CN35	SCV2477-010	CONNECTOR	10PIN	
CN36	QGF0508C1-15W	CONNECTOR	15PIN	

6.17 SWRU BOARD ASSEMBLY PARTS LIST [2][2]

SCK2607-04-00B [2][2]□□□□□□□

Symbol No.	Part No.	Part Name	Description	
IC341	TC74VHC165FT-X	I.C.(M)	TOSHIBA	
IC342	TC74VHC165FT-X	I.C.(M)	TOSHIBA	
Q341	DTC124EUA-X	TRANSISTOR	ROHM	
LD341	AA1102W-X	L.E.D.	FAS	
R341	NRSA63J-223X	M.G.RESISTOR	22k	1/16W
R342	NRSA63J-223X	M.G.RESISTOR	22k	1/16W
R343	NRSA63J-471X	M.G.RESISTOR	470	1/16W
R344	NRSA63J-223X	M.G.RESISTOR	22k	1/16W
R345	NRSA63J-223X	M.G.RESISTOR	22k	1/16W
R346	NRSA63J-223X	M.G.RESISTOR	22k	1/16W
R347	NRSA63J-223X	M.G.RESISTOR	22k	1/16W
R348	NRSA63J-223X	M.G.RESISTOR	22k	1/16W
R349	NRSA63J-223X	M.G.RESISTOR	22k	1/16W
R350	NRSA63J-223X	M.G.RESISTOR	22k	1/16W
R351	NRSA63J-223X	M.G.RESISTOR	22k	1/16W
R353	NRSA63J-223X	M.G.RESISTOR	22k	1/16W
R354	NRSA63J-223X	M.G.RESISTOR	22k	1/16W
R355	NRSA63J-223X	M.G.RESISTOR	22k	1/16W
R356	NRSA63J-223X	M.G.RESISTOR	22k	1/16W
R357	NRSA63J-223X	M.G.RESISTOR	22k	1/16W
R358	NRSA63J-223X	M.G.RESISTOR	22k	1/16W
R359	NRSA63J-223X	M.G.RESISTOR	22k	1/16W
C342	NBE41CM-106X	TAN.CAPACITOR	10	16V
C343	NCB31CK-473X	CER.CAPACITOR	0.047	16V
C344	NCB31CK-473X	CER.CAPACITOR	0.047	16V
S341	NSW0070-002X	SLIDE SWITCH	AUTO IRIS	
S342	NSW0010-001X	SWITCH	FULL AUTO	
S343	NSW0070-002X	SLIDE SWITCH	BLACK	
S344	NSW0010-001X	SWITCH	LOLUX	
CN36	QGF0508F1-15X	CONNECTOR	15PIN	
CN37	SCV2644-110X	CONNECTOR	11PIN	
CN38	QGA1201F2-06X	CONNECTOR	6PIN	

6.18 SWF BOARD ASSEMBLY PARTS LIST [2][3]

SCK2606-01-00B [2][3]□□□□□□□

Symbol No.	Part No.	Part Name	Description
IC321	TC74HC165AF-X	I.C.(M)	TOSHIBA
D321	MA143A-X	DIODE	MATSUSHITA
D322	MA143A-X	DIODE	MATSUSHITA
D324	MA143A-X	DIODE	MATSUSHITA
D325	MA143A-X	DIODE	MATSUSHITA
D329	MA143A-X	DIODE	MATSUSHITA
R321	NRSA02J-223X	M.G.RESISTOR	22k 1/10W
R322	NRSA02J-562X	M.G.RESISTOR	5.6k 1/10W
R323	NRSA02J-103X	M.G.RESISTOR	10k 1/10W
R324	NRSA02J-183X	M.G.RESISTOR	18k 1/10W
R325	NRSA02J-223X	M.G.RESISTOR	22k 1/10W
R326	NRSA02J-223X	M.G.RESISTOR	22k 1/10W
R327	NRSA02J-223X	M.G.RESISTOR	22k 1/10W
R328	NRSA02J-223X	M.G.RESISTOR	22k 1/10W
R329	NRSA02J-334X	M.G.RESISTOR	330k 1/10W
R330	NRSA02J-223X	M.G.RESISTOR	22k 1/10W
R331	NRSA02J-223X	M.G.RESISTOR	22k 1/10W
R332	NRSA02J-223X	M.G.RESISTOR	22k 1/10W
R333	NRSA02J-101X	M.G.RESISTOR	100 1/10W
R334	NRSA02J-222X	M.G.RESISTOR	2.2k 1/10W
VR301	QVQ0290-A14	VAL.RESISTOR	10k AUDIO LEV
C321	NCB21EK-473X	CER.CAPACITOR	0.047 25V
C322	NCB21EK-473X	CER.CAPACITOR	0.047 25V
C323	NCB21EK-473X	CER.CAPACITOR	0.047 25V
C324	NCB21EK-473X	CER.CAPACITOR	0.047 25V
C325	NBE41CM-106X	TAN.CAPACITOR	10 16V
S301	QSW0052-004	TOGGLE SWITCH	ACCU FOCUS/WHIT
S302	QSW0189-001Z	SWITCH	VTR TRIG
S303	QSW0052-005	TOGGLE SWITCH	ZEBRA/SKIN AREA
S304	QSW0189-001Z	SWITCH	TAKE
CN10	QGA1501F1-05	CONNECTOR	5PIN
CN35	QGF1004F1-10	CONNECTOR	10PIN

6.19 SWRM BOARD ASSEMBLY PARTS LIST [2][4]

SCK2606-02-00B [2][4]□□□□□□□

Symbol No.	Part No.	Part Name	Description
D361	HZM6C-X	ZENER DIODE	HITACHI
D362	HZM6C-X	ZENER DIODE	HITACHI
D363	HZM6C-X	ZENER DIODE	HITACHI
D364	HZM6C-X	ZENER DIODE	HITACHI
D365	HZM6C-X	ZENER DIODE	HITACHI
D366	HZM6C-X	ZENER DIODE	HITACHI
D367	HZM6C-X	ZENER DIODE	HITACHI
R361	NRSA02J-222X	M.G.RESISTOR	2.2k 1/10W
R362	NRSA02J-222X	M.G.RESISTOR	2.2k 1/10W
R363	NRSA02J-222X	M.G.RESISTOR	2.2k 1/10W
R364	NRSA02J-222X	M.G.RESISTOR	2.2k 1/10W
R365	NRSA02J-222X	M.G.RESISTOR	2.2k 1/10W
R366	NRSA02J-222X	M.G.RESISTOR	2.2k 1/10W
R367	NRSA02J-222X	M.G.RESISTOR	2.2k 1/10W
S361	QSW0048-001	TOGGLE SWITCH	VTR
S362	QSW0052-001	TOGGLE SWITCH	GAIN
S363	QSW0049-001	TOGGLE SWITCH	OUTPUT
S364	QSW0049-001	TOGGLE SWITCH	WHITE BAL
CN37	QGF1004F1-10	CONNECTOR	10PIN
CN40	QGA1501F1-03	CONNECTOR	3PIN

6.20 SWRB BOARD ASSEMBLY PARTS LIST [2][5]

SCK2606-03-00B [2][5]□□□□□□□

Symbol No.	Part No.	Part Name	Description
C381	NCB21EK-473X	CER.CAPACITOR	0.047 25V
S381	QSW0189-001Z	SWITCH	NG
CN39	QGA1501F1-02	CONNECTOR	2PIN

6.21 SWPW BOARD ASSEMBLY PARTS LIST [2][6]

SCK2606-05-00B [2][6]□□□□□□□

Symbol No.	Part No.	Part Name	Description
D391	HZM6C-X	ZENER DIODE	HITACHI
R391	NRSA02J-222X	M.G.RESISTOR	2.2k 1/10W
S391	QSW0046-001	TOGGLE SWITCH	POWER
CN39	QGA1501C1-02	CONNECTOR	2PIN
CN40	QGA1501C1-03	CONNECTOR	3PIN

6.22 MIC BOARD ASSEMBLY PARTS LIST [2][7]

SCK2606-06-00B [2][7]□□□□□□□

Symbol No.	Part No.	Part Name	Description
R396	NRSA02J-0R0X	M.G.RESISTOR	0 1/10W
R397	NRSA02J-0R0X	M.G.RESISTOR	0 1/10W
C398	NDC21HJ-221X	CER.CAPACITOR	220p 50V
C399	NDC21HJ-221X	CER.CAPACITOR	220p 50V
C1303	NDC21HJ-221X	CER.CAPACITOR	220p 50V
C1304	NDC21HJ-221X	CER.CAPACITOR	220p 50V
L396	NQL124J-101X	COIL	100uH
L397	NQL124J-101X	COIL	100uH
J396	QNZ0414-001	JACK	MIC
CN33	QGA1501C1-03	CONNECTOR	3PIN
K396	SCV2662-027	FERRITE BEADS	
K397	SCV2662-027	FERRITE BEADS	

6.23 BNC BOARD ASSEMBLY PARTS LIST [2][8]

SCK2606-07-00B [2][8]□□□□□□□

Symbol No.	Part No.	Part Name	Description
R399	NRSA02J-750X	M.G.RESISTOR	75 1/10W
CN34	QGA1501C1-04	CONNECTOR	4PIN
K1301	NRSA02J-0R0X	M.G.RESISTOR	0 1/10W
K1302	NRSA02J-0R0X	M.G.RESISTOR	0 1/10W

6.24 VIDEO/SYSCON BOARD ASSEMBLY PARTS LIST [3][1]

SLK2092-U0B(U)

SLK2092-P0B(E) [3][1]□□□□□□□

Symbol No.	Part No.	Part Name	Description
IC1	TC4W53F-X	I.C.(M)	TOSHIBA (U)
IC2	TC74HC4538AF-X	I.C.(M)	TOSHIBA (U)
IC3	TC74HC4538AF-X	I.C.(M)	TOSHIBA (U)
IC4	MM1117XF-X	I.C.(M)	MITSUMI (U)
IC5	NJM2538V-X	I.C.(M)	JRC
IC401	UPD784031GK-BE9	I.C.(M)	NEC
IC402	TC74VHC373FT-X	I.C.(M)	TOSHIBA
IC403	PLSL1063	I.C.(M)	MBM29F002B-70PD
SK403	SCV2768-001X	IC SOCKET	32PIN
IC404	CY62256LL70SN-X	I.C.(M)	CYPRESS
IC405	UPD71055GB-10	I.C.(M)	NEC
IC406	TC74VHC139FT-X	I.C.(M)	TOSHIBA
IC407	X24645S8-2.7-X	I.C.(M)	XICOR
IC408	M51957BFP-X	I.C.(M)	MITSUBISHI
IC409	TC7S14FU-X	I.C.(M)	TOSHIBA
IC410	TC74VHC244FT-X	I.C.(M)	TOSHIBA
IC411	TC7W04FU-X	I.C.(M)	TOSHIBA
IC412	TC74VHC74FT-X	I.C.(M)	TOSHIBA
IC413	TC74VHC125FT-X	I.C.(M)	TOSHIBA
IC414	TC7W04FU-X	I.C.(M)	TOSHIBA
Q1	2SA1774/QRS/-X	TRANSISTOR	ROHM (U)
Q2	2SC4617/RS/-X	TRANSISTOR	ROHM (U)
Q3	2SA1774/QRS/-X	TRANSISTOR	ROHM (U)
Q4	DTC144EUA-X	TRANSISTOR	ROHM (U)
Q5	2SA1774/QRS/-X	TRANSISTOR	ROHM (U)
Q6	2SA1774/QRS/-X	TRANSISTOR	ROHM (U)
Q8	2SC4617/RS/-X	TRANSISTOR	ROHM (U)
Q9	2SC4617/RS/-X	TRANSISTOR	ROHM (U)
Q10	2SC4617/RS/-X	TRANSISTOR	ROHM (U)
Q11	2SA1774/QRS/-X	TRANSISTOR	ROHM (U)
Q12	2SC4617/RS/-X	TRANSISTOR	ROHM (U)
Q13	2SC4617/RS/-X	TRANSISTOR	ROHM (U)
Q14	2SA1774/QRS/-X	TRANSISTOR	ROHM (U)
Q15	2SC4617/RS/-X	TRANSISTOR	ROHM (U)
Q17	2SA1774/QRS/-X	TRANSISTOR	ROHM (U)
Q18	DTC144EUA-X	TRANSISTOR	ROHM
Q19	DTC144EUA-X	TRANSISTOR	ROHM
Q20	2SA1774/QRS/-X	TRANSISTOR	ROHM
Q22	DTC114EUA-X	TRANSISTOR	ROHM (U)
Q401	DTC124EUA-X	TRANSISTOR	ROHM
Q402	DTC124EUA-X	TRANSISTOR	ROHM
Q403	DTA114EUA-X	TRANSISTOR	ROHM
Q404	DTC124EUA-X	TRANSISTOR	ROHM
D1	DAN202U-X	DIODE	ROHM (U)
D2	DAN202U-X	DIODE	ROHM (U)
D3	DAN202U-X	DIODE	ROHM (U)
D401	DAN202U-X	DIODE	ROHM
D402	MA8100/L/-X	ZENER DIODE	MATSUSHITA
D403	DAN202U-X	DIODE	ROHM
R1	NRSA63J-473X	M.G.RESISTOR	47k 1/16W (U)
R2	NRSA63J-333X	M.G.RESISTOR	33k 1/16W (U)
R3	NRSA63J-561X	M.G.RESISTOR	560 1/16W (U)
R4	NRSA63J-101X	M.G.RESISTOR	100 1/16W (U)
R5	NRSA63J-561X	M.G.RESISTOR	560 1/16W (U)
R6	NRSA63J-273X	M.G.RESISTOR	27k 1/16W (U)
R7	NRSA63J-183X	M.G.RESISTOR	18k 1/16W (U)
R8	NRSA63J-561X	M.G.RESISTOR	560 1/16W (U)
R9	NRVA02D-102X	C.M.F.RESISTOR	1k 1/10W (U)
R10	NRVA02D-820X	C.M.F.RESISTOR	82 1/10W (U)
R11	NRVA02D-103X	C.M.F.RESISTOR	10k 1/10W
R12	NRVA02D-103X	C.M.F.RESISTOR	10k 1/10W
R13	NRSA63J-561X	M.G.RESISTOR	560 1/16W (U)
R14	NRVA02D-103X	C.M.F.RESISTOR	10k 1/10W
R15	NRSA63J-0R0X	M.G.RESISTOR	0 1/16W (E)
R16	NRVA02D-103X	C.M.F.RESISTOR	10k 1/10W
R17	NRSA63J-223X	M.G.RESISTOR	22k 1/16W (U)

Symbol No.	Part No.	Part Name	Description	
R18	NRSA63J-101X	M.G.RESISTOR	100	1/16W (U)
R19	NRSA63J-273X	M.G.RESISTOR	27k	1/16W (U)
R20	NRSA63J-473X	M.G.RESISTOR	47k	1/16W (U)
R21	NRSA63J-561X	M.G.RESISTOR	560	1/16W (U)
R22	NRVA02D-750X	C.M.F.RESISTOR	75	1/10W (U)
R23	NRVA02D-822X	C.M.F.RESISTOR	8.2k	1/10W (U)
R24	NRSA63J-122X	M.G.RESISTOR	1.2k	1/16W (U)
R25	NRVA02D-151X	C.M.F.RESISTOR	150	1/10W (U)
R26	NRVA02D-102X	C.M.F.RESISTOR	1k	1/10W (U)
R27	NRSA63J-152X	M.G.RESISTOR	1.5k	1/16W (U)
R28	NRVA02D-333X	C.M.F.RESISTOR	33k	1/10W (U)
R29	NRVA02D-332X	C.M.F.RESISTOR	3.3k	1/10W (U)
R30	NRSA63J-103X	M.G.RESISTOR	10k	1/16W (U)
R31	NRSA63J-331X	M.G.RESISTOR	330	1/16W (U)
R32	NRSA63J-104X	M.G.RESISTOR	100k	1/16W (U)
R33	NRVA02D-223X	C.M.F.RESISTOR	22k	1/10W (U)
R34	NRVA02D-392X	C.M.F.RESISTOR	3.9k	1/10W (U)
R35	NRVA02D-122X	C.M.F.RESISTOR	1.2k	1/10W (U)
R36	NRVA02D-182X	C.M.F.RESISTOR	1.8k	1/10W (U)
R37	NRVA02D-471X	C.M.F.RESISTOR	470	1/10W (U)
R38	NRVA02D-681X	C.M.F.RESISTOR	680	1/10W (U)
R39	NRVA02D-271X	C.M.F.RESISTOR	270	1/10W (U)
R40	NRSA63J-102X	M.G.RESISTOR	1k	1/16W (U)
R41	NRVA02D-391X	C.M.F.RESISTOR	390	1/10W (U)
R42	NRVA02D-391X	C.M.F.RESISTOR	390	1/10W (U)
R43	NRVA02D-390X	C.M.F.RESISTOR	39	1/10W (U)
R48	NRSA63J-152X	M.G.RESISTOR	1.5k	1/16W (U)
R49	NRVA02D-102X	C.M.F.RESISTOR	1k	1/10W (U)
R50	NRVA02D-472X	C.M.F.RESISTOR	4.7k	1/10W (U)
R51	NRVA02D-683X	C.M.F.RESISTOR	68k	1/10W (U)
R52	NRVA02D-153X	C.M.F.RESISTOR	15k	1/10W (U)
R54	NRSA63J-103X	M.G.RESISTOR	10k	1/16W (U)
R55	NRSA63J-223X	M.G.RESISTOR	22k	1/16W (U)
R57	NRSA63J-223X	M.G.RESISTOR	22k	1/16W (U)
R58	NRSA63J-473X	M.G.RESISTOR	47k	1/16W (U)
R59	NRSA63J-0R0X	M.G.RESISTOR	0	1/16W (E)
R60	NRSA63J-560X	M.G.RESISTOR	56	1/16W
R61	NRSA63J-224X	M.G.RESISTOR	220k	1/16W
R62	NRSA63J-103X	M.G.RESISTOR	10k	1/16W
R63	NRSA63J-121X	M.G.RESISTOR	120	1/16W
R64	NRSA63J-225X	M.G.RESISTOR	2.2M	1/16W
R65	NRSA63J-0R0X	M.G.RESISTOR	0	1/16W
R66	NRSA63J-0R0X	M.G.RESISTOR	0	1/16W
R67	NRSA63J-121X	M.G.RESISTOR	120	1/16W
R68	NRSA63J-103X	M.G.RESISTOR	10k	1/16W
R69	NRVA02D-102X	C.M.F.RESISTOR	1k	1/10W
R70	NRVA02D-102X	C.M.F.RESISTOR	1k	1/10W
R71	NRSA63J-681X	M.G.RESISTOR	680	1/16W
R72	NRSA63J-222X	M.G.RESISTOR	2.2k	1/16W (U)
R73	NRSA63J-0R0X	M.G.RESISTOR	0	1/16W
R74	NRSA63J-0R0X	M.G.RESISTOR	0	1/16W
R75	NRSA63J-0R0X	M.G.RESISTOR	0	1/16W
R76	NRSA63J-0R0X	M.G.RESISTOR	0	1/16W
R77	NRSA63J-0R0X	M.G.RESISTOR	0	1/16W
R79	NRSA63J-562X	M.G.RESISTOR	5.6k	1/16W (U)
R80	NRSA63J-101X	M.G.RESISTOR	100	1/16W (U)
R81	NRSA63J-103X	M.G.RESISTOR	10k	1/16W (U)
R82	NRSA63J-105X	M.G.RESISTOR	1M	1/16W (U)
R83	NRSA63J-105X	M.G.RESISTOR	1M	1/16W (U)
R84	NRSA63J-103X	M.G.RESISTOR	10k	1/16W (U)
R86	QRE141J-271Y	CAR.RESISTOR	270	1/4W (U)
R401	NRSA63J-101X	M.G.RESISTOR	100	1/16W
R402	NRSA63J-101X	M.G.RESISTOR	100	1/16W
R403	NRSA63J-101X	M.G.RESISTOR	100	1/16W
R404	NRSA63J-101X	M.G.RESISTOR	100	1/16W
R405	NRSA63J-333X	M.G.RESISTOR	33k	1/16W
R406	NRSA63J-101X	M.G.RESISTOR	100	1/16W
R407	NRSA63J-104X	M.G.RESISTOR	100k	1/16W
R408	NRSA63J-104X	M.G.RESISTOR	100k	1/16W
R409	NRSA63J-0R0X	M.G.RESISTOR	0	1/16W
R410	NRSA63J-0R0X	M.G.RESISTOR	0	1/16W
R411	NRSA63J-0R0X	M.G.RESISTOR	0	1/16W
R412	NRSA63J-222X	M.G.RESISTOR	2.2k	1/16W

Symbol No.	Part No.	Part Name	Description	
R413	NRSA63J-222X	M.G.RESISTOR	2.2k	1/16W
R414	NRSA63J-333X	M.G.RESISTOR	33k	1/16W
R415	NRSA63J-333X	M.G.RESISTOR	33k	1/16W
R416	NRSA63J-104X	M.G.RESISTOR	100k	1/16W
R417	NRSA63J-104X	M.G.RESISTOR	100k	1/16W
R418	NRSA63J-104X	M.G.RESISTOR	100k	1/16W
R419	NRSA63J-104X	M.G.RESISTOR	100k	1/16W
R420	NRSA63J-104X	M.G.RESISTOR	100k	1/16W
R421	NRSA63J-104X	M.G.RESISTOR	100k	1/16W (E)
R422	NRSA63J-104X	M.G.RESISTOR	100k	1/16W
R423	NRSA63J-104X	M.G.RESISTOR	100k	1/16W
R424	NRSA63J-104X	M.G.RESISTOR	100k	1/16W
R425	NRSA63J-102X	M.G.RESISTOR	1k	1/16W
R426	NRSA63J-0R0X	M.G.RESISTOR	0	1/16W
R427	NRSA63J-0R0X	M.G.RESISTOR	0	1/16W
R428	NRSA63J-0R0X	M.G.RESISTOR	0	1/16W
R429	NRSA63J-104X	M.G.RESISTOR	100k	1/16W
R430	NRSA63J-104X	M.G.RESISTOR	100k	1/16W
R431	NRSA63J-222X	M.G.RESISTOR	2.2k	1/16W
R432	NRSA63J-822X	M.G.RESISTOR	8.2k	1/16W
R433	NRSA63J-102X	M.G.RESISTOR	1k	1/16W
R434	NRSA63J-681X	M.G.RESISTOR	680	1/16W
R436	NRSA63J-105X	M.G.RESISTOR	1M	1/16W
R437	NRSA63J-471X	M.G.RESISTOR	470	1/16W
R439	NRSA63J-333X	M.G.RESISTOR	33k	1/16W
R440	NRSA63J-103X	M.G.RESISTOR	10k	1/16W
R441	NRSA63J-333X	M.G.RESISTOR	33k	1/16W
R442	NRSA63J-333X	M.G.RESISTOR	33k	1/16W
R443	NRSA63J-101X	M.G.RESISTOR	100	1/16W
R444	NRSA63J-101X	M.G.RESISTOR	100	1/16W
R445	NRSA63J-101X	M.G.RESISTOR	100	1/16W
R446	NRSA63J-101X	M.G.RESISTOR	100	1/16W
R447	NRSA63J-101X	M.G.RESISTOR	100	1/16W
R448	NRSA63J-101X	M.G.RESISTOR	100	1/16W
R449	NRSA63J-101X	M.G.RESISTOR	100	1/16W
R450	NRSA63J-103X	M.G.RESISTOR	10k	1/16W
R451	NRSA63J-101X	M.G.RESISTOR	100	1/16W
R452	NRSA63J-101X	M.G.RESISTOR	100	1/16W
R453	NRSA63J-333X	M.G.RESISTOR	33k	1/16W
R454	NRSA63J-101X	M.G.RESISTOR	100	1/16W
R455	NRSA63J-101X	M.G.RESISTOR	100	1/16W
R456	NRSA63J-101X	M.G.RESISTOR	100	1/16W
R457	NRSA63J-101X	M.G.RESISTOR	100	1/16W
R458	NRSA63J-101X	M.G.RESISTOR	100	1/16W
R459	NRSA63J-101X	M.G.RESISTOR	100	1/16W
R460	NRSA63J-101X	M.G.RESISTOR	100	1/16W
R461	NRSA63J-101X	M.G.RESISTOR	100	1/16W
R462	NRSA63J-101X	M.G.RESISTOR	100	1/16W
R463	NRSA63J-101X	M.G.RESISTOR	100	1/16W
R464	NRSA63J-101X	M.G.RESISTOR	100	1/16W
R465	NRSA63J-101X	M.G.RESISTOR	100	1/16W
R466	NRSA63J-101X	M.G.RESISTOR	100	1/16W
R467	NRSA63J-101X	M.G.RESISTOR	100	1/16W
R468	NRSA63J-333X	M.G.RESISTOR	33k	1/16W
R469	NRSA63J-101X	M.G.RESISTOR	100	1/16W
R470	NRSA63J-101X	M.G.RESISTOR	100	1/16W
R471	NRSA63J-102X	M.G.RESISTOR	1k	1/16W
R472	NRSA63J-102X	M.G.RESISTOR	1k	1/16W
R473	NRSA63J-473X	M.G.RESISTOR	47k	1/16W
R474	NRSA63J-223X	M.G.RESISTOR	22k	1/16W
R475	NRSA63J-222X	M.G.RESISTOR	2.2k	1/16W
R494	NRSA63J-104X	M.G.RESISTOR	100k	1/16W
R495	NRSA63J-101X	M.G.RESISTOR	100	1/16W
R496	NRSA63J-104X	M.G.RESISTOR	100k	1/16W
R497	NRSA63J-0R0X	M.G.RESISTOR	0	1/16W
R498	NRSA63J-101X	M.G.RESISTOR	100	1/16W
R499	NRSA63J-101X	M.G.RESISTOR	100	1/16W
R500	NRSA63J-101X	M.G.RESISTOR	100	1/16W
R506	NRSA63J-0R0X	M.G.RESISTOR	0	1/16W
R509	NRSA63J-104X	M.G.RESISTOR	100k	1/16W (U)
R510	NRSA63J-102X	M.G.RESISTOR	1k	1/16W
R511	NRSA63J-104X	M.G.RESISTOR	100k	1/16W

[VIDEO/SYSCON]

Symbol No.	Part No.	Part Name	Description
VR2	NVP1415-502X	TRIM.RESISTOR	5k STA P (U)
VR3	NVP1415-103X	TRIM.RESISTOR	10k STO P (U)
VR4	NVP1415-103X	TRIM.RESISTOR	10k DEL P (U)
VR5	NVP1415-503X	TRIM.RESISTOR	50k C LEVEL
VR6	NVP1415-503X	TRIM.RESISTOR	50k Y LEVEL
C1	NCB31EK-103X	CER.CAPACITOR	0.01 25V (U)
C2	NCB31EK-103X	CER.CAPACITOR	0.01 25V (U)
C3	NCB31EK-103X	CER.CAPACITOR	0.01 25V (U)
C4	NCB31EK-103X	CER.CAPACITOR	0.01 25V (U)
C5	NCB31EK-103X	CER.CAPACITOR	0.01 25V (U)
C6	NCB31EK-103X	CER.CAPACITOR	0.01 25V (U)
C7	NCB41CM-106X	CER.CAPACITOR	10 16V (U)
C8	NCB31EK-103X	CER.CAPACITOR	0.01 25V (U)
C9	NCB31EK-103X	CER.CAPACITOR	0.01 25V (U)
C10	NCB31EK-103X	CER.CAPACITOR	0.01 25V (U)
C11	NCB31EK-103X	CER.CAPACITOR	0.01 25V (U)
C12	NEH91CM-476X	E.CAPACITOR	47 16V (U)
C13	NEH91CM-476X	E.CAPACITOR	47 16V (U)
C14	NRSA02J-0R0X	M.G.RESISTOR	0 1/16W (U)
C15	NCB41CM-106X	CER.CAPACITOR	10 16V (U)
C16	NCB41CM-106X	CER.CAPACITOR	10 16V (U)
C17	NDC31HJ-150X	CER.CAPACITOR	15p 50V (U)
C19	NCB31EK-103X	CER.CAPACITOR	0.01 25V (U)
C20	NDC31HJ-821X	CER.CAPACITOR	820p 50V (U)
C21	NDC31HJ-101X	CER.CAPACITOR	100p 50V (U)
C22	NDC31HJ-821X	CER.CAPACITOR	820p 50V (U)
C23	NCB31EK-103X	CER.CAPACITOR	0.01 25V (U)
C24	NCB31CK-104X	CER.CAPACITOR	0.1 16V (U)
C25	NDC31HJ-680X	CER.CAPACITOR	68p 50V (U)
C26	NCB31EK-103X	CER.CAPACITOR	0.01 25V (U)
C27	NEH90JM-476X	E.CAPACITOR	47 6.3V (U)
C28	NCF21AZ-475X	CER.CAPACITOR	4.7 10V (U)
C29	NCB41CM-106X	CER.CAPACITOR	10 16V (U)
C30	NCB31EK-103X	CER.CAPACITOR	0.01 25V
C31	NCB31EK-103X	CER.CAPACITOR	0.01 25V
C32	NEX41AM-476X	E.CAPACITOR	47 10V
C33	NCB41CM-106X	CER.CAPACITOR	10 16V
C34	NCB31CK-104X	CER.CAPACITOR	0.1 16V
C35	NCB31EK-103X	CER.CAPACITOR	0.01 25V
C36	NCB31EK-103X	CER.CAPACITOR	0.01 25V
C37	NCB31EK-103X	CER.CAPACITOR	0.01 25V
C38	NCB31CK-104X	CER.CAPACITOR	0.1 16V
C39	NCB31CK-104X	CER.CAPACITOR	0.1 16V
C40	NCB31CK-104X	CER.CAPACITOR	0.1 16V
C41	NCB31CK-104X	CER.CAPACITOR	0.1 16V
C42	NCB41CM-106X	CER.CAPACITOR	10 16V
C43	NCB41CM-106X	CER.CAPACITOR	10 16V
C44	NCB31CK-104X	CER.CAPACITOR	0.1 16V (U)
C45	NCF21AZ-475X	CER.CAPACITOR	4.7 10V (U)
C46	NCF31CZ-334X	CER.CAPACITOR	0.33 16V
C47	NCB31EK-103X	CER.CAPACITOR	0.01 25V (U)
C48	NCB31EK-103X	CER.CAPACITOR	0.01 25V (U)
C50	NCB31EK-103X	CER.CAPACITOR	0.01 25V
C51	NEX41AM-226X	E.CAPACITOR	22 10V
C52	NCB41EM-475X	CER.CAPACITOR	4.7 25V (U)
	NCB41CM-106X	CER.CAPACITOR	10 16V (E)
C53	NCB41CM-106X	CER.CAPACITOR	10 16V
C54	QEKC1CM-336Z	E.CAPACITOR	33 16V (U)
C55	NCB41CM-106X	CER.CAPACITOR	10 16V (U)
C401	NDC31HJ-8R0X	CER.CAPACITOR	8p 50V
C402	NDC31HJ-8R0X	CER.CAPACITOR	8p 50V
C403	NCB31CK-104X	CER.CAPACITOR	0.1 16V
C404	NCB31CK-104X	CER.CAPACITOR	0.1 16V
C405	NCB31CK-104X	CER.CAPACITOR	0.1 16V
C406	NCB31CK-104X	CER.CAPACITOR	0.1 16V
C407	NCB31CK-104X	CER.CAPACITOR	0.1 16V
C408	NCB31CK-104X	CER.CAPACITOR	0.1 16V
C409	NCB31CK-104X	CER.CAPACITOR	0.1 16V
C410	NCB31CK-104X	CER.CAPACITOR	0.1 16V
C411	NCB31CK-104X	CER.CAPACITOR	0.1 16V
C412	NCB31CK-104X	CER.CAPACITOR	0.1 16V
C413	NCB31CK-104X	CER.CAPACITOR	0.1 16V

Symbol No.	Part No.	Part Name	Description
C414	NCB31CK-104X	CER.CAPACITOR	0.1 16V
C415	NCB31CK-104X	CER.CAPACITOR	0.1 16V
C416	NCB31CK-104X	CER.CAPACITOR	0.1 16V
C417	NCB31CK-104X	CER.CAPACITOR	0.1 16V
C418	NCB31HK-103X	CER.CAPACITOR	0.01 50V
C419	NCB31CK-104X	CER.CAPACITOR	0.1 16V
C420	NCB41CM-106X	CER.CAPACITOR	10 16V
C421	NCB41CM-106X	CER.CAPACITOR	10 16V
C422	NDC31HJ-102X	CER.CAPACITOR	1000p 50V
C423	NDC31HJ-102X	CER.CAPACITOR	1000p 50V
C424	NDC31HJ-102X	CER.CAPACITOR	1000p 50V
L1	NQL024J-471X	COIL	470uH (U)
L2	NQL024J-100X	COIL	10uH (U)
L3	NQL024J-100X	COIL	10uH (U)
L4	NQL024J-100X	COIL	10uH (U)
L5	NQL024J-100X	COIL	10uH
L6	NQL024J-100X	COIL	10uH
L401	NQL024J-100X	COIL	10uH
X401	NAX0320-001X	CRYSTAL	31.9488MHz
CN101	QGF0508F1-40X	CONNECTOR	40PIN
CN401	QGF0508F1-40X	CONNECTOR	40PIN
CN402	QGF0508F2-20X	CONNECTOR	20PIN
K401	PGZ00627Z	FERRATE BEADS	
K402	PGZ00627Z	FERRATE BEADS	

6.25 AUDIO/LCD BOARD ASSEMBLY PARTS LIST 3 2

SLK2091-I0C 3 2 ☐☐☐☐☐☐☐

Symbol No.	Part No.	Part Name	Description	
IC201	NJM2068M-D-X	I.C.(M)	JRC	
IC202	TC4W53F-X	I.C.(M)	TOSHIBA	
IC203	TC4W53F-X	I.C.(M)	TOSHIBA	
IC204	NJM2068M-D-X	I.C.(M)	JRC	
IC205	NJM2068M-D-X	I.C.(M)	JRC	
IC206	BA3314F-X	I.C.(M)	ROHM	
IC207	BA3314F-X	I.C.(M)	ROHM	
IC208	TC4051BF-X	I.C.(M)	TOSHIBA	
IC209	TC4051BF-X	I.C.(M)	TOSHIBA	
IC210	TC4S81F-X	I.C.(M)	TOSHIBA	
IC211	TC4S81F-X	I.C.(M)	TOSHIBA	
IC281	TC4W53F-X	I.C.(M)	TOSHIBA	
IC282	NJM2904M-X	I.C.(M)	JRC	
IC298	TC4S81F-X	I.C.(M)	TOSHIBA	
IC299	TC4S81F-X	I.C.(M)	TOSHIBA	
IC301	M5201FP-X	I.C.(M)	MITSUBISHI	
IC302	M5201FP-X	I.C.(M)	MITSUBISHI	
IC303	M5216FP-X	I.C.(M)	MITSUBISHI	
IC304	M5218AFP-X	I.C.(M)	MITSUBISHI	
IC601	UPD78P058BT	I.C.(M)	NEC	
IC602	NJU6433FB2	I.C.(M)	JRC	
IC603	TC7S66FU-X	I.C.(M)	TOSHIBA	
IC604	TC7SU04FU-X	I.C.(M)	TOSHIBA	
IC605	TC7W126FU-X	I.C.(M)	TOSHIBA	
IC615	BA6138F-X	I.C.(M)	ROHM	
IC616	S-80840ANNP-W	I.C.(M)	SEIKO	
IC618	S-8423LFS-X	I.C.(M)	SEIKO	
Q201	DTC124EUA-X	TRANSISTOR	ROHM	
Q202	DTC124EUA-X	TRANSISTOR	ROHM	
Q203	DTC144EUA-X	TRANSISTOR	ROHM	
Q204	DTC144EUA-X	TRANSISTOR	ROHM	
Q298	DTC144EUA-X	TRANSISTOR	ROHM	
Q299	DTC144EUA-X	TRANSISTOR	ROHM	
Q301	FMW3-X	TRANSISTOR	ROHM	
Q302	2SD601A/QRS/-X	TRANSISTOR	MATSUSHITA	
Q309	FMW3-X	TRANSISTOR	ROHM	
Q310	DTC124EUA-X	TRANSISTOR	ROHM	
Q311	2SJ279S-X	FET	HITACHI	
Q321	DTC144EUA-X	TRANSISTOR	ROHM	
Q322	DTA114EUA-X	TRANSISTOR	ROHM	
Q361	DTC144EUA-X	TRANSISTOR	ROHM	
Q601	DTA124EUA-X	TRANSISTOR	ROHM	
Q602	DTC124EUA-X	TRANSISTOR	ROHM	
Q603	FMC2A-X	TRANSISTOR	ROHM	
Q604	FMC2A-X	TRANSISTOR	ROHM	
Q605	FMC2A-X	TRANSISTOR	ROHM	
Q606	FMC2A-X	TRANSISTOR	ROHM	
Q607	DTC124EUA-X	TRANSISTOR	ROHM	
D605	DAN202U-X	DIODE	ROHM	
D606	DAN202U-X	DIODE	ROHM	
D607	DAN202U-X	DIODE	ROHM	
LD601	TLSG208	L.E.D.		
LD602	QLD0092-001	L.C.D		
PC201	P873-25	PHOTO COUPLER		
R201	NRSA63J-0R0X	M.G.RESISTOR	0	1/16W
R202	NRSA63J-103X	M.G.RESISTOR	10k	1/16W
R203	NRSA63J-103X	M.G.RESISTOR	10k	1/16W
R204	NRSA63J-104X	M.G.RESISTOR	100k	1/16W
R205	NRSA63J-682X	M.G.RESISTOR	6.8k	1/16W
R206	NRSA63J-682X	M.G.RESISTOR	6.8k	1/16W
R207	NRSA63J-103X	M.G.RESISTOR	10k	1/16W
R208	NRSA63J-103X	M.G.RESISTOR	10k	1/16W
R209	NRSA63J-103X	M.G.RESISTOR	10k	1/16W
R210	NRSA63J-103X	M.G.RESISTOR	10k	1/16W
R211	NRSA63J-104X	M.G.RESISTOR	100k	1/16W

Symbol No.	Part No.	Part Name	Description	
R212	NRSA63J-104X	M.G.RESISTOR	100k	1/16W
R215	NRSA63J-123X	M.G.RESISTOR	12k	1/16W
R216	NRSA63J-392X	M.G.RESISTOR	3.9k	1/16W
R217	NRSA63J-102X	M.G.RESISTOR	1k	1/16W
R218	NRSA63J-332X	M.G.RESISTOR	3.3k	1/16W
R219	NRSA63J-392X	M.G.RESISTOR	3.9k	1/16W
R220	NRSA63J-392X	M.G.RESISTOR	3.9k	1/16W
R221	NRSA63J-182X	M.G.RESISTOR	1.8k	1/16W
R222	NRSA63J-182X	M.G.RESISTOR	1.8k	1/16W
R223	NRSA63J-471X	M.G.RESISTOR	470	1/16W
R224	NRSA63J-471X	M.G.RESISTOR	470	1/16W
R225	NRSA63J-102X	M.G.RESISTOR	1k	1/16W
R226	NRSA63J-102X	M.G.RESISTOR	1k	1/16W
R227	NRSA63J-103X	M.G.RESISTOR	10k	1/16W
R228	NRSA63J-103X	M.G.RESISTOR	10k	1/16W
R230	NRSA63J-104X	M.G.RESISTOR	100k	1/16W
R235	NRSA63J-0R0X	M.G.RESISTOR	0	1/16W
R236	NRSA63J-0R0X	M.G.RESISTOR	0	1/16W
R237	NRSA63J-104X	M.G.RESISTOR	100k	1/16W
R239	NRSA63J-103X	M.G.RESISTOR	10k	1/16W
R240	NRSA63J-103X	M.G.RESISTOR	10k	1/16W
R241	NRSA63J-153X	M.G.RESISTOR	15k	1/16W
R242	NRSA63J-153X	M.G.RESISTOR	15k	1/16W
R243	NRSA63J-473X	M.G.RESISTOR	47k	1/16W
R244	NRSA63J-473X	M.G.RESISTOR	47k	1/16W
R245	NRSA63J-183X	M.G.RESISTOR	18k	1/16W
R246	NRSA63J-183X	M.G.RESISTOR	18k	1/16W
R247	NRSA63J-103X	M.G.RESISTOR	10k	1/16W
R248	NRSA63J-103X	M.G.RESISTOR	10k	1/16W
R249	NRSA63J-392X	M.G.RESISTOR	3.9k	1/16W
R250	NRSA63J-392X	M.G.RESISTOR	3.9k	1/16W
R251	NRSA63J-182X	M.G.RESISTOR	1.8k	1/16W
R252	NRSA63J-182X	M.G.RESISTOR	1.8k	1/16W
R253	NRSA63J-225X	M.G.RESISTOR	2.2M	1/16W
R254	NRSA63J-225X	M.G.RESISTOR	2.2M	1/16W
R255	NRSA63J-123X	M.G.RESISTOR	12k	1/16W
R256	NRSA63J-123X	M.G.RESISTOR	12k	1/16W
R257	NRSA63J-273X	M.G.RESISTOR	27k	1/16W
R258	NRSA63J-273X	M.G.RESISTOR	27k	1/16W
R259	NRSA63J-102X	M.G.RESISTOR	1k	1/16W
R260	NRSA63J-102X	M.G.RESISTOR	1k	1/16W
R261	NRSA63J-392X	M.G.RESISTOR	3.9k	1/16W
R262	NRSA63J-392X	M.G.RESISTOR	3.9k	1/16W
R263	NRSA63J-103X	M.G.RESISTOR	10k	1/16W
R264	NRSA63J-103X	M.G.RESISTOR	10k	1/16W
R267	NRSA63J-0R0X	M.G.RESISTOR	0	1/16W
R268	NRSA63J-0R0X	M.G.RESISTOR	0	1/16W
R269	NRSA63J-224X	M.G.RESISTOR	220k	1/16W
R270	NRSA63J-224X	M.G.RESISTOR	220k	1/16W
R271	NRSA63J-0R0X	M.G.RESISTOR	0	1/16W
R281	NRSA63J-472X	M.G.RESISTOR	4.7k	1/16W
R282	NRSA63J-101X	M.G.RESISTOR	100	1/16W
R283	NRSA63J-223X	M.G.RESISTOR	22k	1/16W
R284	NRSA63J-104X	M.G.RESISTOR	100k	1/16W
R298	NRSA63J-473X	M.G.RESISTOR	47k	1/16W
R299	NRSA63J-473X	M.G.RESISTOR	47k	1/16W
R301	NRSA63J-473X	M.G.RESISTOR	47k	1/16W
R302	NRSA63J-473X	M.G.RESISTOR	47k	1/16W
R303	NRSA63J-822X	M.G.RESISTOR	8.2k	1/16W
R304	NRSA63J-822X	M.G.RESISTOR	8.2k	1/16W
R305	NRSA63J-103X	M.G.RESISTOR	10k	1/16W
R306	NRSA63J-103X	M.G.RESISTOR	10k	1/16W
R307	NRSA63J-103X	M.G.RESISTOR	10k	1/16W
R308	NRSA63J-103X	M.G.RESISTOR	10k	1/16W
R309	NRSA63J-473X	M.G.RESISTOR	47k	1/16W
R310	NRSA63J-473X	M.G.RESISTOR	47k	1/16W
R311	NRSA63J-103X	M.G.RESISTOR	10k	1/16W
R312	NRSA63J-103X	M.G.RESISTOR	10k	1/16W
R313	NRSA63J-822X	M.G.RESISTOR	8.2k	1/16W
R314	NRSA63J-822X	M.G.RESISTOR	8.2k	1/16W
R315	NRSA63J-103X	M.G.RESISTOR	10k	1/16W
R316	NRSA63J-103X	M.G.RESISTOR	10k	1/16W
R317	NRSA63J-102X	M.G.RESISTOR	1k	1/16W

[AUDIO/LCD]

Symbol No.	Part No.	Part Name	Description	
R318	NRSA63J-102X	M.G.RESISTOR	1k	1/16W
R319	NRSA63J-473X	M.G.RESISTOR	47k	1/16W
R320	NRSA63J-473X	M.G.RESISTOR	47k	1/16W
R323	NRSA63J-222X	M.G.RESISTOR	2.2k	1/16W
R324	NRSA63J-222X	M.G.RESISTOR	2.2k	1/16W
R325	NRSA63J-103X	M.G.RESISTOR	10k	1/16W
R326	NRSA63J-273X	M.G.RESISTOR	27k	1/16W
R327	NRSA63J-102X	M.G.RESISTOR	1k	1/16W
R328	NRSA63J-102X	M.G.RESISTOR	1k	1/16W
R329	NRSA63J-102X	M.G.RESISTOR	1k	1/16W
R330	NRSA63J-103X	M.G.RESISTOR	10k	1/16W
R331	NRSA63J-103X	M.G.RESISTOR	10k	1/16W
R332	NRSA63J-473X	M.G.RESISTOR	47k	1/16W
R335	NRSA63J-0R0X	M.G.RESISTOR	0	1/16W
R336	NRSA63J-202X	M.G.RESISTOR	2k	1/16W
R337	NRSA63J-202X	M.G.RESISTOR	2k	1/16W
R339	NRSA63J-103X	M.G.RESISTOR	10k	1/16W
R340	NRSA63J-333X	M.G.RESISTOR	33k	1/16W
R341	NRSA63J-330X	M.G.RESISTOR	33	1/16W
R342	NRSA63J-473X	M.G.RESISTOR	47k	1/16W
R343	NRSA63J-510X	M.G.RESISTOR	51	1/16W
R344	NRSA63J-510X	M.G.RESISTOR	51	1/16W
R345	NRSA63J-222X	M.G.RESISTOR	2.2k	1/16W
R355	NRSA63J-0R0X	M.G.RESISTOR	0	1/16W
R356	NRSA63J-0R0X	M.G.RESISTOR	0	1/16W
R358	NRSA63J-104X	M.G.RESISTOR	100k	1/16W
R359	NRSA63J-104X	M.G.RESISTOR	100k	1/16W
R361	NRSA63J-473X	M.G.RESISTOR	47k	1/16W
R362	NRSA63J-473X	M.G.RESISTOR	47k	1/16W
R371	NRSA63J-222X	M.G.RESISTOR	2.2k	1/16W
R372	NRSA63J-222X	M.G.RESISTOR	2.2k	1/16W
R373	NRSA63J-0R0X	M.G.RESISTOR	0	1/16W
R374	NRSA63J-0R0X	M.G.RESISTOR	0	1/16W
R375	NRSA63J-102X	M.G.RESISTOR	1k	1/16W
R376	NRSA63J-102X	M.G.RESISTOR	1k	1/16W
R377	NRSA63J-102X	M.G.RESISTOR	1k	1/16W
R380	NRSA63J-473X	M.G.RESISTOR	47k	1/16W
R381	NRSA63J-0R0X	M.G.RESISTOR	0	1/16W
R383	NRSA63J-0R0X	M.G.RESISTOR	0	1/16W
R385	NRSA63J-0R0X	M.G.RESISTOR	0	1/16W
R390	NRSA63J-0R0X	M.G.RESISTOR	0	1/16W
R391	NRSA63J-0R0X	M.G.RESISTOR	0	1/16W
R392	NRSA63J-0R0X	M.G.RESISTOR	0	1/16W
R393	NRSA63J-0R0X	M.G.RESISTOR	0	1/16W
R394	NRSA63J-0R0X	M.G.RESISTOR	0	1/16W
R395	NRSA63J-0R0X	M.G.RESISTOR	0	1/16W
R396	NRSA63J-472X	M.G.RESISTOR	4.7k	1/16W
R398	NRSA63J-0R0X	M.G.RESISTOR	0	1/16W
R601	NRSA63J-104X	M.G.RESISTOR	100k	1/16W
R602	NRSA63J-104X	M.G.RESISTOR	100k	1/16W
R603	NRSA63J-104X	M.G.RESISTOR	100k	1/16W
R604	NRSA63J-121X	M.G.RESISTOR	120	1/16W
R605	NRSA63J-121X	M.G.RESISTOR	120	1/16W
R606	NRSA63J-121X	M.G.RESISTOR	120	1/16W
R607	NRSA63J-104X	M.G.RESISTOR	100k	1/16W
R608	NRSA63J-104X	M.G.RESISTOR	100k	1/16W
R609	NRSA63J-334X	M.G.RESISTOR	330k	1/16W
R610	NRSA63J-821X	M.G.RESISTOR	820	1/16W
R611	NRSA63J-104X	M.G.RESISTOR	100k	1/16W
R612	NRSA63J-102X	M.G.RESISTOR	1k	1/16W
R630	NRSA63J-0R0X	M.G.RESISTOR	0	1/16W
R631	NRSA63J-0R0X	M.G.RESISTOR	0	1/16W
R632	NRSA63J-103X	M.G.RESISTOR	10k	1/16W
R633	NRSA63J-103X	M.G.RESISTOR	10k	1/16W
R634	NRSA63J-333X	M.G.RESISTOR	33k	1/16W
R635	NRSA63J-823X	M.G.RESISTOR	82k	1/16W
R636	NRSA63J-104X	M.G.RESISTOR	100k	1/16W
R637	NRSA63J-102X	M.G.RESISTOR	1k	1/16W
R638	NRSA63J-224X	M.G.RESISTOR	220k	1/16W
R639	NRSA63J-224X	M.G.RESISTOR	220k	1/16W
R640	NRSA63J-224X	M.G.RESISTOR	220k	1/16W
R641	NRSA63J-101X	M.G.RESISTOR	100	1/16W
R642	NRSA63J-334X	M.G.RESISTOR	330k	1/16W

Symbol No.	Part No.	Part Name	Description	
R643	NRSA63J-301X	M.G.RESISTOR	300	1/16W
R644	NRSA63J-301X	M.G.RESISTOR	300	1/16W
R645	NRSA63J-301X	M.G.RESISTOR	300	1/16W
R646	NRSA63J-301X	M.G.RESISTOR	300	1/16W
R647	NRSA63J-301X	M.G.RESISTOR	300	1/16W
R648	NRSA63J-301X	M.G.RESISTOR	300	1/16W
R649	NRSA63J-104X	M.G.RESISTOR	100k	1/16W
R650	NRSA63J-104X	M.G.RESISTOR	100k	1/16W
R651	NRSA63J-104X	M.G.RESISTOR	100k	1/16W
R652	NRSA63J-104X	M.G.RESISTOR	100k	1/16W
R653	NRSA63J-104X	M.G.RESISTOR	100k	1/16W
R654	NRSA63J-470X	M.G.RESISTOR	47	1/16W
R655	NRSA63J-470X	M.G.RESISTOR	47	1/16W
R656	NRSA63J-470X	M.G.RESISTOR	47	1/16W
R657	NRSA63J-470X	M.G.RESISTOR	47	1/16W
R658	NRSA63J-470X	M.G.RESISTOR	47	1/16W
R659	NRSA63J-104X	M.G.RESISTOR	100k	1/16W
R660	NRSA63J-104X	M.G.RESISTOR	100k	1/16W
R661	NRSA63J-104X	M.G.RESISTOR	100k	1/16W
R662	NRSA63J-104X	M.G.RESISTOR	100k	1/16W
R663	NRSA63J-104X	M.G.RESISTOR	100k	1/16W
R664	NRSA63J-104X	M.G.RESISTOR	100k	1/16W
R665	NRSA63J-104X	M.G.RESISTOR	100k	1/16W
R666	NRSA63J-104X	M.G.RESISTOR	100k	1/16W
R667	NRSA63J-104X	M.G.RESISTOR	100k	1/16W
R668	NRSA63J-104X	M.G.RESISTOR	100k	1/16W
R669	NRSA63J-104X	M.G.RESISTOR	100k	1/16W
R670	NRSA63J-333X	M.G.RESISTOR	33k	1/16W
R671	NRSA63J-222X	M.G.RESISTOR	2.2k	1/16W
R672	NRSA63J-222X	M.G.RESISTOR	2.2k	1/16W
R673	NRSA63J-271X	M.G.RESISTOR	270	1/16W
R674	NRSA63J-271X	M.G.RESISTOR	270	1/16W
R675	NRSA63J-101X	M.G.RESISTOR	100	1/16W
R676	NRSA63J-271X	M.G.RESISTOR	270	1/16W
R677	NRSA63J-154X	M.G.RESISTOR	150k	1/16W
R678	NRSA63J-101X	M.G.RESISTOR	100	1/16W
R679	NRSA63J-333X	M.G.RESISTOR	33k	1/16W
R680	NRSA63J-101X	M.G.RESISTOR	100	1/16W
R681	NRSA63J-101X	M.G.RESISTOR	100	1/16W
R682	NRSA63J-101X	M.G.RESISTOR	100	1/16W
R683	NRSA63J-104X	M.G.RESISTOR	100k	1/16W
R684	NRSA63J-103X	M.G.RESISTOR	10k	1/16W
R685	NRSA63J-102X	M.G.RESISTOR	1k	1/16W
R686	NRSA63J-101X	M.G.RESISTOR	100	1/16W
R687	NRSA63J-101X	M.G.RESISTOR	100	1/16W
R688	NRSA63J-154X	M.G.RESISTOR	150k	1/16W
R689	NRSA63J-154X	M.G.RESISTOR	150k	1/16W
R701	NRSA63J-104X	M.G.RESISTOR	100k	1/16W
R702	NRSA63J-104X	M.G.RESISTOR	100k	1/16W
R703	NRSA63J-104X	M.G.RESISTOR	100k	1/16W
R704	NRSA63J-104X	M.G.RESISTOR	100k	1/16W
R705	NRSA63J-104X	M.G.RESISTOR	100k	1/16W
R706	NRSA63J-104X	M.G.RESISTOR	100k	1/16W
R707	NRSA63J-104X	M.G.RESISTOR	100k	1/16W
R708	NRSA63J-104X	M.G.RESISTOR	100k	1/16W
R709	NRSA63J-104X	M.G.RESISTOR	100k	1/16W
R710	NRSA63J-104X	M.G.RESISTOR	100k	1/16W
R711	NRSA63J-101X	M.G.RESISTOR	100	1/16W
R712	NRSA63J-104X	M.G.RESISTOR	100k	1/16W
R714	NRSA63J-104X	M.G.RESISTOR	100k	1/16W
R715	NRSA63J-470X	M.G.RESISTOR	47	1/16W
R716	NRSA63J-470X	M.G.RESISTOR	47	1/16W
R717	NRSA63J-470X	M.G.RESISTOR	47	1/16W
R718	NRSA63J-104X	M.G.RESISTOR	100k	1/16W
R721	NRSA63J-0R0X	M.G.RESISTOR	0	1/16W
R722	NRSA63J-104X	M.G.RESISTOR	100k	1/16W
R723	NRSA63J-104X	M.G.RESISTOR	100k	1/16W
R724	NRSA63J-104X	M.G.RESISTOR	100k	1/16W
R725	NRSA63J-104X	M.G.RESISTOR	100k	1/16W
R726	NRSA63J-0R0X	M.G.RESISTOR	0	1/16W
R727	NRSA63J-104X	M.G.RESISTOR	100k	1/16W
R728	NRSA63J-0R0X	M.G.RESISTOR	0	1/16W
R729	NRSA63J-102X	M.G.RESISTOR	1k	1/16W

Symbol No.	Part No.	Part Name	Description
VR201	QVQ0290-A14	VAL.RESISTOR	10k REC VR CH1
VR202	QVQ0290-A14	VAL.RESISTOR	10k REC VR CH2
VR301	NVP1415-104X	TRIM.RESISTOR	100k CH1 UNIT
VR302	NVP1415-104X	TRIM.RESISTOR	100k
VR303	NVP1415-104X	TRIM.RESISTOR	100k
VR304	NVP1415-104X	TRIM.RESISTOR	100k CH2 UNIT
VR310	QVQ0290-A14	VAL.RESISTOR	10k AU OUT SEL
VR311	QVQ0290-A14	VAL.RESISTOR	10k ALARM/MON
VR601	NVP1415-502X	TRIM.RESISTOR	5k LCD L LEV
VR602	NVP1415-502X	TRIM.RESISTOR	5k LCD R LEV
C201	NCB41CM-106X	CER.CAPACITOR	10 16V
C202	NCB41CM-106X	CER.CAPACITOR	10 16V
C203	NCB41CM-106X	CER.CAPACITOR	10 16V
C204	NCB41CM-106X	CER.CAPACITOR	10 16V
C205	NDC31HJ-101X	CER.CAPACITOR	100p 50V
C206	NCB31CK-104X	CER.CAPACITOR	0.1 16V
C207	NEH71CM-106X	E.CAPACITOR	10 16V
C208	NCB31CK-104X	CER.CAPACITOR	0.1 16V
C209	NEH71CM-106X	E.CAPACITOR	10 16V
C211	NCB41CM-106X	CER.CAPACITOR	10 16V
C212	NCB41CM-106X	CER.CAPACITOR	10 16V
C213	NCB21CK-474X	CER.CAPACITOR	0.47 16V
C214	NCB21CK-474X	CER.CAPACITOR	0.47 16V
C215	NCB21CK-474X	CER.CAPACITOR	0.47 16V
C216	NCB21CK-474X	CER.CAPACITOR	0.47 16V
C217	NEH71CM-476X	E.CAPACITOR	47 16V
C218	NEH71CM-476X	E.CAPACITOR	47 16V
C219	NCB31CK-104X	CER.CAPACITOR	0.1 16V
C220	NCB31CK-104X	CER.CAPACITOR	0.1 16V
C223	NCB31CK-104X	CER.CAPACITOR	0.1 16V
C224	NCB31CK-104X	CER.CAPACITOR	0.1 16V
C225	NCB41CM-106X	CER.CAPACITOR	10 16V
C226	NCB41CM-106X	CER.CAPACITOR	10 16V
C227	NCB31CK-104X	CER.CAPACITOR	0.1 16V
C228	NCB31CK-104X	CER.CAPACITOR	0.1 16V
C229	NEH71CM-106X	E.CAPACITOR	10 16V
C230	NEH71CM-106X	E.CAPACITOR	10 16V
C231	NEH71CM-106X	E.CAPACITOR	10 16V
C232	NEH71CM-106X	E.CAPACITOR	10 16V
C233	NCB31CK-104X	CER.CAPACITOR	0.1 16V
C234	NCB31CK-104X	CER.CAPACITOR	0.1 16V
C235	NDC31HJ-100X	CER.CAPACITOR	10p 50V
C236	NDC31HJ-100X	CER.CAPACITOR	10p 50V
C237	NEH71CM-106X	E.CAPACITOR	10 16V
C238	NEH71CM-106X	E.CAPACITOR	10 16V
C239	NCB31CK-104X	CER.CAPACITOR	0.1 16V
C240	NCB31CK-104X	CER.CAPACITOR	0.1 16V
C241	NCB31CK-104X	CER.CAPACITOR	0.1 16V
C242	NCB31CK-104X	CER.CAPACITOR	0.1 16V
C243	NEH71CM-106X	E.CAPACITOR	10 16V
C244	NEH71CM-106X	E.CAPACITOR	10 16V
C247	NEH71CM-106X	E.CAPACITOR	10 16V
C248	NEH71CM-106X	E.CAPACITOR	10 16V
C249	NEH71CM-106X	E.CAPACITOR	10 16V
C250	NEH71CM-106X	E.CAPACITOR	10 16V
C251	NCB41CM-106X	CER.CAPACITOR	10 16V
C252	NCB41CM-106X	CER.CAPACITOR	10 16V
C253	NCB41CM-106X	CER.CAPACITOR	10 16V
C254	NCB41CM-106X	CER.CAPACITOR	10 16V
C255	NCB31CK-104X	CER.CAPACITOR	0.1 16V
C256	NCB31CK-104X	CER.CAPACITOR	0.1 16V
C257	NCB31CK-104X	CER.CAPACITOR	0.1 16V
C258	NCB31CK-104X	CER.CAPACITOR	0.1 16V
C265	NEH71CM-106X	E.CAPACITOR	10 16V
C266	NEH71CM-106X	E.CAPACITOR	10 16V
C267	NCB41CM-106X	CER.CAPACITOR	10 16V
C268	NCB41CM-106X	CER.CAPACITOR	10 16V
C269	NCB41CM-106X	CER.CAPACITOR	10 16V
C270	NCB41CM-106X	CER.CAPACITOR	10 16V
C271	NEH71CM-106X	E.CAPACITOR	10 16V
C272	NEH71CM-106X	E.CAPACITOR	10 16V
C280	NCB31CK-104X	CER.CAPACITOR	0.1 16V

Symbol No.	Part No.	Part Name	Description
C281	NCB31CK-104X	CER.CAPACITOR	0.1 16V
C282	NCB31CK-104X	CER.CAPACITOR	0.1 16V
C291	NCB41CM-106X	CER.CAPACITOR	10 16V
C292	NCB41CM-106X	CER.CAPACITOR	10 16V
C303	NCB41CM-106X	CER.CAPACITOR	10 16V
C304	NCB41CM-106X	CER.CAPACITOR	10 16V
C309	NCB41CM-106X	CER.CAPACITOR	10 16V
C310	NCB41CM-106X	CER.CAPACITOR	10 16V
C313	NDC31HJ-100X	CER.CAPACITOR	10p 50V
C314	NDC31HJ-100X	CER.CAPACITOR	10p 50V
C315	NDC31HJ-100X	CER.CAPACITOR	10p 50V
C316	NDC31HJ-100X	CER.CAPACITOR	10p 50V
C317	NCB31CK-104X	CER.CAPACITOR	0.1 16V
C318	NEH71CM-226X	E.CAPACITOR	22 16V
C319	NEH71CM-226X	E.CAPACITOR	22 16V
C320	NCB31CK-104X	CER.CAPACITOR	0.1 16V
C321	NEH71CM-226X	E.CAPACITOR	22 16V
C322	NEH71CM-226X	E.CAPACITOR	22 16V
C323	NCB31CK-104X	CER.CAPACITOR	0.1 16V
C324	NCB31CK-104X	CER.CAPACITOR	0.1 16V
C325	NCB41CM-106X	CER.CAPACITOR	10 16V
C326	NCB41CM-106X	CER.CAPACITOR	10 16V
C330	NCB31CK-104X	CER.CAPACITOR	0.1 16V
C331	NEH71CM-226X	E.CAPACITOR	22 16V
C332	NEH71CM-226X	E.CAPACITOR	22 16V
C333	NCB31CK-104X	CER.CAPACITOR	0.1 16V
C334	NCB31CK-104X	CER.CAPACITOR	0.1 16V
C335	NEH71CM-226X	E.CAPACITOR	22 16V
C336	NCB31CK-104X	CER.CAPACITOR	0.1 16V
C337	NEH71CM-226X	E.CAPACITOR	22 16V
C341	NCB41CM-106X	CER.CAPACITOR	10 16V
C342	NCB41CM-106X	CER.CAPACITOR	10 16V
C343	NCB41CM-106X	CER.CAPACITOR	10 16V
C346	NDC31HJ-101X	CER.CAPACITOR	100p 50V
C347	NCB31CK-104X	CER.CAPACITOR	0.1 16V
C349	NEH71CM-106X	E.CAPACITOR	10 16V
C353	NEH71CM-476X	E.CAPACITOR	47 16V
C354	NCB41CM-106X	CER.CAPACITOR	10 16V
C355	NCB41CM-106X	CER.CAPACITOR	10 16V
C356	NCB41CM-106X	CER.CAPACITOR	10 16V
C357	NEH71EM-226X	E.CAPACITOR	22 25V
C361	NCB41CM-106X	CER.CAPACITOR	10 16V
C362	NCB41CM-106X	CER.CAPACITOR	10 16V
C368	NEH71CM-106X	E.CAPACITOR	10 16V
C370	NEH71CM-106X	E.CAPACITOR	10 16V
C373	NCB41CM-106X	CER.CAPACITOR	10 16V
C374	NCB41CM-106X	CER.CAPACITOR	10 16V
C381	NCB31CK-104X	CER.CAPACITOR	0.1 16V
C382	NEH71CM-476X	E.CAPACITOR	47 16V
C383	NCB31CK-104X	CER.CAPACITOR	0.1 16V
C384	NEH71CM-476X	E.CAPACITOR	47 16V
C385	NCB31CK-104X	CER.CAPACITOR	0.1 16V
C386	NEH71CM-476X	E.CAPACITOR	47 16V
C387	NCB31CK-104X	CER.CAPACITOR	0.1 16V
C388	NCB31CK-104X	CER.CAPACITOR	0.1 16V
C389	NCB31CK-104X	CER.CAPACITOR	0.1 16V
C391	NCB31CK-104X	CER.CAPACITOR	0.1 16V
C392	NEH71EM-226X	E.CAPACITOR	22 25V
C393	NCB31CK-104X	CER.CAPACITOR	0.1 16V
C601	NCB31CK-104X	CER.CAPACITOR	0.1 16V
C602	NCB31CK-104X	CER.CAPACITOR	0.1 16V
C603	NCB31CK-104X	CER.CAPACITOR	0.1 16V
C604	NCB31CK-104X	CER.CAPACITOR	0.1 16V
C619	NCB31CK-104X	CER.CAPACITOR	0.1 16V
C620	NCB41EM-475X	CER.CAPACITOR	4.7 25V
C621	NCB31CK-104X	CER.CAPACITOR	0.1 16V
C622	NCB41CM-106X	CER.CAPACITOR	10 16V
C623	NCB41CM-106X	CER.CAPACITOR	10 16V
C624	NCF21CZ-105X	CER.CAPACITOR	1 16V
C625	NCB41EM-475X	CER.CAPACITOR	4.7 25V
C628	NCB41CM-106X	CER.CAPACITOR	10 16V
C629	NCB41CM-106X	CER.CAPACITOR	10 16V
C630	NCB41CM-106X	CER.CAPACITOR	10 16V

[AUDIO/LCD]

Symbol No.	Part No.	Part Name	Description
C631	NCB41EM-475X	CER.CAPACITOR	4.7 25V
C633	NCB41EM-475X	CER.CAPACITOR	4.7 25V
C634	NCB41EM-475X	CER.CAPACITOR	4.7 25V
C635	NDC31HJ-180X	CER.CAPACITOR	18p 50V
C636	NDC31HJ-150X	CER.CAPACITOR	15p 50V
C637	NDC31HJ-150X	CER.CAPACITOR	15p 50V
C638	NDC31HJ-150X	CER.CAPACITOR	15p 50V
C639	NCB31CK-104X	CER.CAPACITOR	0.1 16V
C640	NCB31CK-104X	CER.CAPACITOR	0.1 16V
C641	NCB31CK-104X	CER.CAPACITOR	0.1 16V
C642	NCB31CK-104X	CER.CAPACITOR	0.1 16V
C643	NCB31CK-104X	CER.CAPACITOR	0.1 16V
C651	NCB41EM-475X	CER.CAPACITOR	4.7 25V
C652	NCB41EM-475X	CER.CAPACITOR	4.7 25V
C653	NCB41CM-106X	CER.CAPACITOR	10 16V
C654	NCB31CK-104X	CER.CAPACITOR	0.1 16V
C655	NCB31CK-104X	CER.CAPACITOR	0.1 16V
C656	NCB41CM-106X	CER.CAPACITOR	10 16V
C657	NCB41EM-475X	CER.CAPACITOR	4.7 25V
C670	NCB41CM-106X	CER.CAPACITOR	10 16V
C671	NCB41CM-106X	CER.CAPACITOR	10 16V
L381	NQL024J-100X	COIL	10uH
L382	NQL024J-100X	COIL	10uH
L383	NQL024J-100X	COIL	10uH
L384	NQL024J-100X	COIL	10uH
L602	NQL024J-100X	COIL	10uH
L603	NQL024J-100X	COIL	10uH
L604	NQL024J-100X	COIL	10uH
L605	NQL024J-100X	COIL	10uH
X601	NAX0065-001X	CRYSTAL	4.912MHz
X602	NAX0074-001X	CRYSTAL	32.768kHz
S201	NSW0070-001X	SLIDE SWITCH	INPUT SEL CH1
S202	NSW0070-001X	SLIDE SWITCH	INPUT SEL CH2
S203	NSW0070-001X	SLIDE SWITCH	MANU/AUTO CH1
S204	NSW0070-001X	SLIDE SWITCH	MANU/AUTO CH2
S301	QSW0340-001	SLIDE SWITCH	AUDIO OUT SEL
S601	NSW0070-001X	SLIDE SWITCH	PRESET/REGEN.
S602	NSW0070-001X	SLIDE SWITCH	FREE/REC
S603	QSW0334-001	SLIDE SWITCH	LIGHT
S604	NSW0005-001X	SWITCH	CONTINUE
S605	NSW0005-001X	SWITCH	MENU
S606	NSW0005-001X	SWITCH	HOLD
S607	NSW0005-001X	SWITCH	SHIFT
S608	NSW0005-001X	SWITCH	ADVANCE
S609	NSW0005-001X	SWITCH	PRESET
S610	NSW0005-001X	SWITCH	RESET
S611	QSW0340-001	SLIDE SWITCH	CTL/TC/UB
S612	NSW0125-001X	SWITCH	
CN201	QGF0508F1-40X	CONNECTOR	40PIN
CN202	QGA1201F2-04X	CONNECTOR	4PIN
CN203	QGA1201F2-02X	CONNECTOR	2PIN
CN601	QGF0508F1-30X	CONNECTOR	30PIN
CN602	QGF1012F1-08X	CONNECTOR	8PIN
CN604	QGF0508F1-20X	CONNECTOR	20PIN
BT601	CR2032-HLD	BATTERY HOLDER	
⚠CP601	ICP-S1.0TN	ICP	
DI601	QLL0063-001	BACK LIGHT ASSY	
K603	PGZ00627Z	FERRATE BEADS	
K604	PGZ00627Z	FERRATE BEADS	
K605	PGZ00627Z	FERRATE BEADS	
K606	PGZ00627Z	FERRATE BEADS	
K607	PGZ00627Z	FERRATE BEADS	

6.26 REG BOARD ASSEMBLY PARTS LIST [3][3]

SLK2095-00B [3][3]□□□□□□□

Symbol No.	Part No.	Part Name	Description
IC1	MB3782PF-X	I.C.(M)	FUJITSU
IC2	MB3782PF-X	I.C.(M)	FUJITSU
Q1	2SJ484WY-X	FET	HITACHI
Q2	2SC4097/QR/-X	TRANSISTOR	ROHM
Q3	2SA1577/QR/-X	TRANSISTOR	ROHM
Q4	2SJ484WY-X	FET	HITACHI
Q5	2SC4097/QR/-X	TRANSISTOR	ROHM
Q6	2SA1577/QR/-X	TRANSISTOR	ROHM
Q7	2SJ484WY-X	FET	HITACHI
Q8	2SC4097/QR/-X	TRANSISTOR	ROHM
Q9	2SA1577/QR/-X	TRANSISTOR	ROHM
Q10	2SJ484WY-X	FET	HITACHI
Q11	2SC4097/QR/-X	TRANSISTOR	ROHM
Q12	2SA1577/QR/-X	TRANSISTOR	ROHM
Q13	2SA1577/QR/-X	TRANSISTOR	ROHM
Q14	2SC4097/QR/-X	TRANSISTOR	ROHM
Q15	HAT1021R-X	TRANSISTOR	HITACHI
Q16	2SC4097/QR/-X	TRANSISTOR	ROHM
Q17	2SA1577/QR/-X	TRANSISTOR	ROHM
Q18	2SA1312/G/-X	TRANSISTOR	TOSHIBA
Q19	DTC144EUA-X	TRANSISTOR	ROHM
D1	MA736-X	DIODE	MATSUSHITA
D2	MA736-X	DIODE	MATSUSHITA
D3	MA736-X	DIODE	MATSUSHITA
D4	MA736-X	DIODE	MATSUSHITA
D5	DA114-X	DIODE	ROHM
D6	DA114-X	DIODE	ROHM
D9	MA738-X	DIODE	MATSUSHITA
R1	NRSA63D-332X	M.G.RESISTOR	3.3k 1/16W
R2	NRSA63D-471X	M.G.RESISTOR	470 1/16W
R3	NRSA63D-100X	M.G.RESISTOR	10 1/16W
R4	NRSA63D-332X	M.G.RESISTOR	3.3k 1/16W
R5	NRSA63D-471X	M.G.RESISTOR	470 1/16W
R6	NRSA63D-100X	M.G.RESISTOR	10 1/16W
R7	NRSA63D-332X	M.G.RESISTOR	3.3k 1/16W
R8	NRSA63D-471X	M.G.RESISTOR	470 1/16W
R9	NRSA63D-100X	M.G.RESISTOR	10 1/16W
R10	NRSA63D-332X	M.G.RESISTOR	3.3k 1/16W
R11	NRSA63D-471X	M.G.RESISTOR	470 1/16W
R12	NRSA63D-100X	M.G.RESISTOR	10 1/16W
R13	NRSA63D-332X	M.G.RESISTOR	3.3k 1/16W
R14	NRSA63D-332X	M.G.RESISTOR	3.3k 1/16W
R15	NRSA63D-681X	M.G.RESISTOR	680 1/16W
R16	NRSA63D-473X	M.G.RESISTOR	47k 1/16W
R17	NRSA63D-332X	M.G.RESISTOR	3.3k 1/16W
R18	NRSA63D-471X	M.G.RESISTOR	470 1/16W
R19	NRSA63D-100X	M.G.RESISTOR	10 1/16W
R20	NRSA63D-153X	M.G.RESISTOR	15k 1/16W
R21	NRSA63D-154X	M.G.RESISTOR	150k 1/16W
R22	NRSA63D-222X	M.G.RESISTOR	2.2k 1/16W
R23	NRSA63J-0R0X	M.G.RESISTOR	0 1/16W
R24	NRSA63D-683X	M.G.RESISTOR	68k 1/16W
R25	NRSA63D-274X	M.G.RESISTOR	270k 1/16W
R26	NRSA63D-472X	M.G.RESISTOR	4.7k 1/16W
R27	NRSA63D-154X	M.G.RESISTOR	150k 1/16W
R28	NRSA63D-472X	M.G.RESISTOR	4.7k 1/16W
R29	NRSA63D-154X	M.G.RESISTOR	150k 1/16W
R30	NRSA63D-683X	M.G.RESISTOR	68k 1/16W
R31	NRSA63D-274X	M.G.RESISTOR	270k 1/16W
R32	NRSA63D-105X	M.G.RESISTOR	1M 1/16W
R33	NRSA63D-822X	M.G.RESISTOR	8.2k 1/16W
R34	NRSA63D-222X	M.G.RESISTOR	2.2k 1/16W
R35	NRSA63D-472X	M.G.RESISTOR	4.7k 1/16W
R36	NRSA63D-822X	M.G.RESISTOR	8.2k 1/16W
R37	NRSA63D-154X	M.G.RESISTOR	150k 1/16W
R38	NRSA63D-472X	M.G.RESISTOR	4.7k 1/16W
R39	NRSA63D-472X	M.G.RESISTOR	4.7k 1/16W
R40	NRSA63D-683X	M.G.RESISTOR	68k 1/16W
R41	NRSA63D-274X	M.G.RESISTOR	270k 1/16W

Symbol No.	Part No.	Part Name	Description
R42	NRSA63D-472X	M.G.RESISTOR	4.7k 1/16W
R43	NRSA63D-273X	M.G.RESISTOR	27k 1/16W
R44	NRSA63D-222X	M.G.RESISTOR	2.2k 1/16W
R46	NRSA63D-222X	M.G.RESISTOR	2.2k 1/16W
R47	NRSA63D-224X	M.G.RESISTOR	220k 1/16W
R48	NRSA63D-682X	M.G.RESISTOR	6.8k 1/16W
R49	NRSA63D-102X	M.G.RESISTOR	1k 1/16W
R50	NRSA63D-103X	M.G.RESISTOR	10k 1/16W
R51	NRSA63D-222X	M.G.RESISTOR	2.2k 1/16W
R52	NRSA63D-472X	M.G.RESISTOR	4.7k 1/16W
R53	NRSA63D-154X	M.G.RESISTOR	150k 1/16W
R54	NRSA63D-683X	M.G.RESISTOR	68k 1/16W
R55	NRSA63D-274X	M.G.RESISTOR	270k 1/16W
R56	NRSA63D-683X	M.G.RESISTOR	68k 1/16W
R57	NRSA63D-274X	M.G.RESISTOR	270k 1/16W
R58	NRSA63D-472X	M.G.RESISTOR	4.7k 1/16W
R59	NRSA63D-154X	M.G.RESISTOR	150k 1/16W
R60	NRSA63D-103X	M.G.RESISTOR	10k 1/16W
R61	NRSA63D-103X	M.G.RESISTOR	10k 1/16W
R62	NRSA63D-154X	M.G.RESISTOR	150k 1/16W
R63	NRSA63D-472X	M.G.RESISTOR	4.7k 1/16W
R64	NRSA63D-683X	M.G.RESISTOR	68k 1/16W
R65	NRSA63D-154X	M.G.RESISTOR	150k 1/16W
R66	NRSA63D-222X	M.G.RESISTOR	2.2k 1/16W
R67	NRSA63D-823X	M.G.RESISTOR	82k 1/16W
R68	NRSA63D-392X	M.G.RESISTOR	3.9k 1/16W
R69	NRSA63D-472X	M.G.RESISTOR	4.7k 1/16W
R70	NRSA63D-103X	M.G.RESISTOR	10k 1/16W
R71	NRSA63D-823X	M.G.RESISTOR	82k 1/16W
R72	NRSA63D-681X	M.G.RESISTOR	680 1/16W
R101	NRSA63D-274X	M.G.RESISTOR	270k 1/16W
R102	NRSA63D-273X	M.G.RESISTOR	27k 1/16W
C1	NBQD1AM-686X	TAN.CAPACITOR	68 10V
C2	NCB31CK-104X	CER.CAPACITOR	0.1 16V
C3	NBQD1AM-686X	TAN.CAPACITOR	68 10V
C4	NBQD1AM-686X	TAN.CAPACITOR	68 10V
C5	NCB31CK-104X	CER.CAPACITOR	0.1 16V
C6	NBQD1AM-686X	TAN.CAPACITOR	68 10V
C7	NBQD1AM-686X	TAN.CAPACITOR	68 10V
C8	NCB31CK-104X	CER.CAPACITOR	0.1 16V
C9	NBQD1AM-686X	TAN.CAPACITOR	68 10V
C10	NBQD1AM-686X	TAN.CAPACITOR	68 10V
C11	NCB31CK-104X	CER.CAPACITOR	0.1 16V
C12	NBQD1AM-686X	TAN.CAPACITOR	68 10V
C13	NCB31CK-104X	CER.CAPACITOR	0.1 16V
C14	NBQD1AM-686X	TAN.CAPACITOR	68 10V
C15	NEHE1JM-106X	E.CAPACITOR	10 63V
C16	NCF21HZ-104X	CER.CAPACITOR	0.1 50V
C17	NCF21HZ-104X	CER.CAPACITOR	0.1 50V
C18	NCF21HZ-104X	CER.CAPACITOR	0.1 50V
C19	NCF21HZ-104X	CER.CAPACITOR	0.1 50V
C20	NCS31HJ-471X	CER.CAPACITOR	470p 50V
C21	NCS31HJ-471X	CER.CAPACITOR	470p 50V
C22	NBQD1AM-686X	TAN.CAPACITOR	68 10V
C23	NCB31CK-104X	CER.CAPACITOR	0.1 16V
C24	NBQD1AM-686X	TAN.CAPACITOR	68 10V
C25	NEH71EM-226X	E.CAPACITOR	22 25V
C26	NEH71EM-226X	E.CAPACITOR	22 25V
C27	NCB31CK-104X	CER.CAPACITOR	0.1 16V
C28	NCB31CK-104X	CER.CAPACITOR	0.1 16V
C29	NCB31EK-822X	CER.CAPACITOR	8200p 25V
C30	NCB31EK-822X	CER.CAPACITOR	8200p 25V
C31	NCB31CK-104X	CER.CAPACITOR	0.1 16V
C32	NCS31HJ-391X	CER.CAPACITOR	390p 50V
C33	NCB31EK-822X	CER.CAPACITOR	8200p 25V
C34	NCB31CK-104X	CER.CAPACITOR	0.1 16V
C35	NCB11CK-105X	CER.CAPACITOR	1 16V
C36	NCB31CK-104X	CER.CAPACITOR	0.1 16V
C37	NCB31EK-822X	CER.CAPACITOR	8200p 25V
C38	NCB31EK-822X	CER.CAPACITOR	8200p 25V
C39	NCB31CK-104X	CER.CAPACITOR	0.1 16V
C40	NCB31CK-104X	CER.CAPACITOR	0.1 16V

Symbol No.	Part No.	Part Name	Description
C41	NCB31CK-104X	CER.CAPACITOR	0.1 16V
C42	NCB31EK-822X	CER.CAPACITOR	8200p 25V
C43	NCB31CK-104X	CER.CAPACITOR	0.1 16V
C44	NCB41EM-475X	CER.CAPACITOR	4.7 25V
C45	NCB41EM-475X	CER.CAPACITOR	4.7 25V
C46	NCB41EM-475X	CER.CAPACITOR	4.7 25V
C47	NCB41EM-475X	CER.CAPACITOR	4.7 25V
C48	NCB31CK-104X	CER.CAPACITOR	0.1 16V
C61	NEHE1JM-106X	E.CAPACITOR	10 63V
C101	NCB31CK-104X	CER.CAPACITOR	0.1 16V
L1	SSV2810-330V	COIL	33uH
L2	SSV2810-330V	COIL	33uH
L3	SSV2810-330V	COIL	33uH
L4	SSV2810-330V	COIL	33uH
L5	SSV2810-330V	COIL	33uH
L6	SSV2810-330V	COIL	33uH
L7	SSV2810-330V	COIL	33uH
L8	SSV2810-330V	COIL	33uH
L9	SSV2810-330V	COIL	33uH
L10	NQL42EM-220X	COIL	22uH
L11	NQL26CM-220X	COIL	22uH
L20	SSV2810-330V	COIL	33uH
L21	NQL26CM-330X	COIL	33uH
CN1	QGA1201F2-06X	CONNECTOR	6PIN
CN2	QGA1201C2-12X	CONNECTOR	12PIN
CN3	QGA1201C2-04X	CONNECTOR	4PIN
⚠CP1	ICP-S0.5TN	ICP	
⚠CP2	ICP-S2.3TN	ICP	
⚠CP3	ICP-S2.3TN	ICP	
T1	NQR0183-001X	TRANSFORMER	

6.27 MOTHER BOARD ASSEMBLY PARTS LIST [3][4]

SLK2098-01-00A [3][4]□□□□□□□

Symbol No.	Part No.	Part Name	Description
CN3	QGF0508C1-33W	CONNECTOR	33PIN
CN4	QGF0508C1-30W	CONNECTOR	30PIN
CN101	QGF0508C1-40W	CONNECTOR	40PIN
CN102	SCV2477-006	CONNECTOR	6PIN
CN103	SCV2477-016	CONNECTOR	16PIN
CN104	QGF0508C1-20W	CONNECTOR	20PIN
CN105	QGA1201C2-07X	CONNECTOR	7PIN
CN106	QGA1201C2-12X	CONNECTOR	12PIN
CN115	QGA1201C2-05X	CONNECTOR	5PIN
CN201	QGF0508C1-40W	CONNECTOR	40PIN
CN401	QGF0508C1-40W	CONNECTOR	40PIN
CN601	QGF0508C1-30W	CONNECTOR	30PIN

6.28 OPE BOARD ASSEMBLY PARTS LIST [3][5]

SLK2098-02-00A [3][5]□□□□□□□

Symbol No.	Part No.	Part Name	Description	
IC1	M66312FP-W	I.C.(M)	MITSUBISHI	
IC2	TC7S14FU-X	I.C.(M)	TOSHIBA	
IC3	TC7S14FU-X	I.C.(M)	TOSHIBA	
D1	DAN202U-X	DIODE	ROHM	
LD1	SLM-13VWF-X	L.E.D.	LOG	
LD2	SLM-13VWF-X	L.E.D.	REW	
LD3	SLM-13VWF-X	L.E.D.	FF	
LD4	SLM-13VWF-X	L.E.D.	PLAY	
LD5	SLM-13VWF-X	L.E.D.	STILL	
R1	NRSA63J-472X	M.G.RESISTOR	4.7k	1/16W
R2	NRSA63J-472X	M.G.RESISTOR	4.7k	1/16W
R3	NRSA63J-472X	M.G.RESISTOR	4.7k	1/16W
R4	NRSA63J-472X	M.G.RESISTOR	4.7k	1/16W
R5	NRSA63J-224X	M.G.RESISTOR	220k	1/16W
R6	NRSA63J-102X	M.G.RESISTOR	1k	1/16W
R7	NRSA63J-102X	M.G.RESISTOR	1k	1/16W
R8	NRSA63J-122X	M.G.RESISTOR	1.2k	1/16W
R9	NRSA63J-222X	M.G.RESISTOR	2.2k	1/16W
R10	NRSA63J-332X	M.G.RESISTOR	3.3k	1/16W
R11	NRSA63J-561X	M.G.RESISTOR	560	1/16W
R12	NRSA63J-561X	M.G.RESISTOR	560	1/16W
R14	NRSA63J-561X	M.G.RESISTOR	560	1/16W
R15	NRSA63J-561X	M.G.RESISTOR	560	1/16W
R16	NRSA63J-561X	M.G.RESISTOR	560	1/16W
R17	NRSA63J-472X	M.G.RESISTOR	4.7k	1/16W
R18	NRSA63J-472X	M.G.RESISTOR	4.7k	1/16W
C1	NBE21CM-475X	TAN.CAPACITOR	4.7	16V
C2	NCB31CK-104X	CER.CAPACITOR	0.1	16V
C3	NCB11CK-105X	CER.CAPACITOR	1	16V
C4	NCB31CK-104X	CER.CAPACITOR	0.1	16V
C5	NCB31CK-104X	CER.CAPACITOR	0.1	16V
L1	NQL114K-100X	COIL	10uH	
S1	NSW0005-001X	SWITCH	REW	
S2	NSW0005-001X	SWITCH	STOP	
S3	NSW0005-001X	SWITCH	FF	
S4	NSW0005-001X	SWITCH	PLAY	
S5	NSW0005-001X	SWITCH	STILL	
S10	NSW0005-001X	SWITCH	LOG	
CN1	QGF1013F1-08X	CONNECTOR	8PIN	

6.29 SEN1 BOARD ASSEMBLY PARTS LIST [3][6]

SLK2098-03-00A [3][6]□□□□□□□

Symbol No.	Part No.	Part Name	Description	
PC1	TLP909	PHOTO COUPLER		
PC2	TLP830	PHOTO COUPLER		
R1	NRSA63J-102X	M.G.RESISTOR	1k	1/16W
R2	NRSA63J-223X	M.G.RESISTOR	22k	1/16W
R3	NRSA63J-821X	M.G.RESISTOR	820	1/16W
R4	NRSA63J-223X	M.G.RESISTOR	22k	1/16W
C1	NCB31HK-103X	CER.CAPACITOR	0.01	50V
CN115	QGA1201F2-05X	CONNECTOR	5PIN	
CN116	QGA1201F2-03X	CONNECTOR	3PIN	

6.30 SENS2 BOARD ASSEMBLY PARTS LIST [3][7]

SLK2098-04-00A [3][7]□□□□□□□

Symbol No.	Part No.	Part Name	Description	
PC1	TLP814	PHOTO COUPLER		
R1	NRSA63J-223X	M.G.RESISTOR	22k	1/16W
R2	NRSA63J-821X	M.G.RESISTOR	820	1/16W
C1	NCB31HK-103X	CER.CAPACITOR	0.01	50V
CN116	QGA1201F2-03X	CONNECTOR	3PIN	

6.31 REMOTE BOARD ASSEMBLY PARTS LIST [3][8]

SLK2098-05-00C [3][8]□□□□□□□

Symbol No.	Part No.	Part Name	Description
D1	HZM9C-X	ZENER DIODE	HITACHI
D2	HZM9C-X	ZENER DIODE	HITACHI
D3	HZM9C-X	ZENER DIODE	HITACHI
D4	HZM9C-X	ZENER DIODE	HITACHI
D5	HZM9C-X	ZENER DIODE	HITACHI
D6	HZM9C-X	ZENER DIODE	HITACHI
CN102	SCV2477-006	CONNECTOR	6PIN
K1	SCV2662-027	FERRITE BEADS	
K2	SCV2662-027	FERRITE BEADS	
K3	SCV2662-027	FERRITE BEADS	
K4	SCV2662-027	FERRITE BEADS	
K5	SCV2662-027	FERRITE BEADS	

6.32 AU JUNK BOARD ASSEMBLY PARTS LIST [3][9]

SLK2094-01-00B [3][9]□□□□□□□

Symbol No.	Part No.	Part Name	Description	
IC1	NJM2068M-D-X	I.C.(M)	JRC	
IC2	NJM2068M-D-X	I.C.(M)	JRC	
IC101	NJM2068M-D-X	I.C.(M)	JRC	
IC102	NJM2068M-D-X	I.C.(M)	JRC	
Q51	2SD2240/RST/-X	TRANSISTOR	MATSUSHITA	
Q52	2SB1463/RST/-X	TRANSISTOR	MATSUSHITA	
Q53	2SD2240/RST/-X	TRANSISTOR	MATSUSHITA	
Q151	2SD2240/RST/-X	TRANSISTOR	MATSUSHITA	
Q152	2SB1463/RST/-X	TRANSISTOR	MATSUSHITA	
Q153	2SD2240/RST/-X	TRANSISTOR	MATSUSHITA	
D1	DA204U-X	DIODE	ROHM	
D2	DA204U-X	DIODE	ROHM	
D101	DA204U-X	DIODE	ROHM	
D102	DA204U-X	DIODE	ROHM	
R1	NRVA02D-222X	C.M.F.RESISTOR	2.2k	1/10W
R2	NRVA02D-222X	C.M.F.RESISTOR	2.2k	1/10W
R3	NRVA02D-222X	C.M.F.RESISTOR	2.2k	1/10W
R4	NRVA02D-222X	C.M.F.RESISTOR	2.2k	1/10W
R5	NRVA02D-182X	C.M.F.RESISTOR	1.8k	1/10W
R6	NRVA02D-182X	C.M.F.RESISTOR	1.8k	1/10W
R11	NRVA02D-331X	C.M.F.RESISTOR	330	1/10W
R12	NRVA02D-331X	C.M.F.RESISTOR	330	1/10W
R13	NRSA63J-332X	M.G.RESISTOR	3.3k	1/16W
R14	NRSA63J-104X	M.G.RESISTOR	100k	1/16W
R15	NRSA63J-104X	M.G.RESISTOR	100k	1/16W
R16	NRSA63J-222X	M.G.RESISTOR	2.2k	1/16W
R17	NRSA63J-222X	M.G.RESISTOR	2.2k	1/16W
R18	NRSA63J-750X	M.G.RESISTOR	75	1/16W
R19	NRSA63J-680X	M.G.RESISTOR	68	1/16W
R20	NRSA63J-101X	M.G.RESISTOR	100	1/16W
R21	NRSA63J-101X	M.G.RESISTOR	100	1/16W
R22	NRSA63J-332X	M.G.RESISTOR	3.3k	1/16W
R23	NRSA63J-332X	M.G.RESISTOR	3.3k	1/16W
R24	NRVA02D-153X	C.M.F.RESISTOR	15k	1/10W
R25	NRVA02D-153X	C.M.F.RESISTOR	15k	1/10W
R26	NRVA02D-153X	C.M.F.RESISTOR	15k	1/10W
R27	NRVA02D-153X	C.M.F.RESISTOR	15k	1/10W
R51	NRSA63J-273X	M.G.RESISTOR	27k	1/16W
R52	NRSA63J-274X	M.G.RESISTOR	270k	1/16W
R53	NRSA63J-274X	M.G.RESISTOR	270k	1/16W
R54	NRSA63J-105X	M.G.RESISTOR	1M	1/16W
R55	NRSA63J-0R0X	M.G.RESISTOR	0	1/16W
R56	NRSA63J-473X	M.G.RESISTOR	47k	1/16W
R57	NRSA63J-473X	M.G.RESISTOR	47k	1/16W
R58	NRSA63J-0R0X	M.G.RESISTOR	0	1/16W
R59	NRSA63J-0R0X	M.G.RESISTOR	0	1/16W
R101	NRVA02D-222X	C.M.F.RESISTOR	2.2k	1/10W
R102	NRVA02D-222X	C.M.F.RESISTOR	2.2k	1/10W
R103	NRVA02D-222X	C.M.F.RESISTOR	2.2k	1/10W
R104	NRVA02D-222X	C.M.F.RESISTOR	2.2k	1/10W
R105	NRVA02D-182X	C.M.F.RESISTOR	1.8k	1/10W
R106	NRVA02D-182X	C.M.F.RESISTOR	1.8k	1/10W
R111	NRVA02D-331X	C.M.F.RESISTOR	330	1/10W
R112	NRVA02D-331X	C.M.F.RESISTOR	330	1/10W
R113	NRSA63J-332X	M.G.RESISTOR	3.3k	1/16W
R114	NRSA63J-104X	M.G.RESISTOR	100k	1/16W
R115	NRSA63J-104X	M.G.RESISTOR	100k	1/16W
R116	NRSA63J-222X	M.G.RESISTOR	2.2k	1/16W
R117	NRSA63J-222X	M.G.RESISTOR	2.2k	1/16W
R118	NRSA63J-750X	M.G.RESISTOR	75	1/16W
R119	NRSA63J-680X	M.G.RESISTOR	68	1/16W
R120	NRSA63J-101X	M.G.RESISTOR	100	1/16W
R121	NRSA63J-101X	M.G.RESISTOR	100	1/16W
R122	NRSA63J-332X	M.G.RESISTOR	3.3k	1/16W
R123	NRSA63J-332X	M.G.RESISTOR	3.3k	1/16W
R124	NRVA02D-153X	C.M.F.RESISTOR	15k	1/10W
R125	NRVA02D-153X	C.M.F.RESISTOR	15k	1/10W
R126	NRVA02D-153X	C.M.F.RESISTOR	15k	1/10W
R127	NRVA02D-153X	C.M.F.RESISTOR	15k	1/10W
R151	NRSA63J-273X	M.G.RESISTOR	27k	1/16W

Symbol No.	Part No.	Part Name	Description	
R152	NRSA63J-274X	M.G.RESISTOR	270k	1/16W
R153	NRSA63J-274X	M.G.RESISTOR	270k	1/16W
R154	NRSA63J-105X	M.G.RESISTOR	1M	1/16W
R155	NRSA63J-0R0X	M.G.RESISTOR	0	1/16W
R156	NRSA63J-473X	M.G.RESISTOR	47k	1/16W
R157	NRSA63J-473X	M.G.RESISTOR	47k	1/16W
R158	NRSA63J-0R0X	M.G.RESISTOR	0	1/16W
R159	NRSA63J-0R0X	M.G.RESISTOR	0	1/16W
R201	NRSA63J-0R0X	M.G.RESISTOR	0	1/16W
R601	NRSA63J-0R0X	M.G.RESISTOR	0	1/16W
R602	NRSA63J-0R0X	M.G.RESISTOR	0	1/16W
R603	NRSA63J-0R0X	M.G.RESISTOR	0	1/16W
R604	NRSA63J-0R0X	M.G.RESISTOR	0	1/16W
C1	NCB31HK-222X	CER.CAPACITOR	2200p	50V
C12	NEH71HM-106X	E.CAPACITOR	10	50V
C13	NEH71HM-106X	E.CAPACITOR	10	50V
C14	NEH71HM-106X	E.CAPACITOR	10	50V
C15	NEH71HM-106X	E.CAPACITOR	10	50V
C16	NDC31HJ-101X	CER.CAPACITOR	100p	50V
C17	NDC31HJ-101X	CER.CAPACITOR	100p	50V
C18	NCB31CK-104X	CER.CAPACITOR	0.1	16V
C19	NEH71CM-476X	E.CAPACITOR	47	16V
C20	NEH71CM-476X	E.CAPACITOR	47	16V
C21	NCB31CK-104X	CER.CAPACITOR	0.1	16V
C22	NDC31HJ-101X	CER.CAPACITOR	100p	50V
C23	NCB31CK-104X	CER.CAPACITOR	0.1	16V
C24	NEH71CM-476X	E.CAPACITOR	47	16V
C25	NCB31CK-104X	CER.CAPACITOR	0.1	16V
C26	NEH71CM-476X	E.CAPACITOR	47	16V
C27	NCB41CM-106X	CER.CAPACITOR	10	16V
C51	NEH71HM-105X	E.CAPACITOR	1	50V
C52	NEH71HM-105X	E.CAPACITOR	1	50V
C55	NCB31HK-102X	CER.CAPACITOR	1000p	50V
C101	NCB31HK-222X	CER.CAPACITOR	2200p	50V
C112	NEH71HM-106X	E.CAPACITOR	10	50V
C113	NEH71HM-106X	E.CAPACITOR	10	50V
C114	NEH71HM-106X	E.CAPACITOR	10	50V
C115	NEH71HM-106X	E.CAPACITOR	10	50V
C116	NDC31HJ-101X	CER.CAPACITOR	100p	50V
C117	NDC31HJ-101X	CER.CAPACITOR	100p	50V
C118	NCB31CK-104X	CER.CAPACITOR	0.1	16V
C119	NEH71CM-476X	E.CAPACITOR	47	16V
C120	NEH71CM-476X	E.CAPACITOR	47	16V
C121	NCB31CK-104X	CER.CAPACITOR	0.1	16V
C122	NDC31HJ-101X	CER.CAPACITOR	100p	50V
C123	NCB31CK-104X	CER.CAPACITOR	0.1	16V
C124	NEH71CM-476X	E.CAPACITOR	47	16V
C125	NCB31CK-104X	CER.CAPACITOR	0.1	16V
C126	NEH71CM-476X	E.CAPACITOR	47	16V
C127	NCB41CM-106X	CER.CAPACITOR	10	16V
C151	NEH71HM-105X	E.CAPACITOR	1	50V
C152	NEH71HM-105X	E.CAPACITOR	1	50V
C155	NCB31HK-102X	CER.CAPACITOR	1000p	50V
C202	NEH71CM-476X	E.CAPACITOR	47	16V
C203	NCB31CK-104X	CER.CAPACITOR	0.1	16V
C205	NEH71CM-476X	E.CAPACITOR	47	16V
C206	NCB31CK-104X	CER.CAPACITOR	0.1	16V
L201	NQL024J-100X	COIL	10uH	
L202	NQL024J-100X	COIL	10uH	
S1	QSW0811-001	SLIDE SWITCH	INPUT SELECT 1	
S101	QSW0811-001	SLIDE SWITCH	INPUT SELECT 2	
CN104	QGF0508F1-20X	CONNECTOR	20PIN	
CN107	SCV2477-010	CONNECTOR	10PIN	
CN108	QGA1201C2-04X	CONNECTOR	4PIN	
CN109	QGA1201C2-02X	CONNECTOR	2PIN	
CN801	QGA1201C2-06X	CONNECTOR	6PIN	
JK601	QNZ0097-001	JACK	DV	
K601	SCV2662-027	FERRITE BEADS		
K602	SCV2662-027	FERRITE BEADS		

6.33 XLR BOARD ASSEMBLY PARTS LIST [4][0]

SLK2094-02-00A [4][0]□□□□□□□

Symbol No.	Part No.	Part Name	Description
R301	NRSA63J-0R0X	M.G.RESISTOR	0 1/16W
R302	NRSA63J-0R0X	M.G.RESISTOR	0 1/16W
C309	NDC31HJ-221X	CER.CAPACITOR	220p 50V
C310	NDC31HJ-221X	CER.CAPACITOR	220p 50V
C311	NDC31HJ-221X	CER.CAPACITOR	220p 50V
C312	NDC31HJ-221X	CER.CAPACITOR	220p 50V
C313	NDC31HJ-221X	CER.CAPACITOR	220p 50V
C314	NDC31HJ-221X	CER.CAPACITOR	220p 50V
C315	NDC31HJ-221X	CER.CAPACITOR	220p 50V
C316	NDC31HJ-221X	CER.CAPACITOR	220p 50V
L301	NQL024J-101X	COIL	100uH
L302	NQL024J-101X	COIL	100uH
L303	NQL024J-101X	COIL	100uH
L304	NQL024J-101X	COIL	100uH
CN107	SCV2644-110W	CONNECTOR	11PIN
JK301	QNZ0428-001	CONNECTOR	AUDIO CH1
JK302	QNZ0428-001	CONNECTOR	AUDIO CH2
K301	SCV2662-027	FERRITE BEADS	
K302	SCV2662-027	FERRITE BEADS	
K303	SCV2662-027	FERRITE BEADS	
K304	SCV2662-027	FERRITE BEADS	
K305	SCV2662-027	FERRITE BEADS	
K306	SCV2662-027	FERRITE BEADS	

6.34 PWR JUNC BOARD ASSEMBLY PARTS LIST [4][1]

SLK2093-01-00A [4][1]□□□□□□□

Symbol No.	Part No.	Part Name	Description
D1	SB140L-6395	DIODE	SANYO
D2	HZM9C-X	ZENER DIODE	HITACHI
C1	QEUA1EM-478	E.CAPACITOR	4700 25V
C2	NCB21EK-104X	CER.CAPACITOR	0.1 25V
C3	NCB21EK-104X	CER.CAPACITOR	0.1 25V
TH2	QAD0115-R40Z	THERMISTOR	0.4
⚠BK1	QMH0015-010	BLAKER	
CN41	QGA2001C1-05	CONNECTOR	5PIN
CN105	QGA1501C1-07	CONNECTOR	7PIN
CN110	QGA1501C1-06	CONNECTOR	6PIN
CN111	QGA2001C1-02	CONNECTOR	2PIN
CN112	QGA1501C1-02	CONNECTOR	2PIN
CN113	QGA3901C1-02	CONNECTOR	2PIN
CN114	QGA3901C1-04	CONNECTOR	4PIN
K1	SCV2662-027	FERRITE BEADS	
K2	SCV2662-027	FERRITE BEADS	
TB1	SQMX002-001Z	TERMINAL	

6.35 CONNECT BOARD ASSEMBLY PARTS LIST [4][2]

SLK2093-02-00A [4][2]□□□□□□□

Symbol No.	Part No.	Part Name	Description
D1	HZM3.0NB1-X	ZENER DIODE	HITACHI
D2	HZM3.0NB1-X	ZENER DIODE	HITACHI
D3	HZM3.0NB1-X	ZENER DIODE	HITACHI
D4	HZM3.0NB1-X	ZENER DIODE	HITACHI
D5	HZM3.0NB1-X	ZENER DIODE	HITACHI
D6	HZM3.0NB1-X	ZENER DIODE	HITACHI
D7	HZM12NB2-X	ZENER DIODE	HITACHI
D8	HZM12NB2-X	ZENER DIODE	HITACHI
D9	HZM12NB2-X	ZENER DIODE	HITACHI
D10	HZM12NB2-X	ZENER DIODE	HITACHI
R1	NRSA02J-680X	M.G.RESISTOR	68 1/10W
R2	NRSA02J-680X	M.G.RESISTOR	68 1/10W
R3	NRSA02J-0R0X	M.G.RESISTOR	0 1/10W
R4	NRSA02J-0R0X	M.G.RESISTOR	0 1/10W
R5	NRSA02J-0R0X	M.G.RESISTOR	0 1/10W
R6	NRSA02J-0R0X	M.G.RESISTOR	0 1/10W
R7	NRSA02J-0R0X	M.G.RESISTOR	0 1/10W
R8	NRSA02J-0R0X	M.G.RESISTOR	0 1/10W
R9	NRSA02J-0R0X	M.G.RESISTOR	0 1/10W
R10	NRSA02J-0R0X	M.G.RESISTOR	0 1/10W
R15	NRSA02J-0R0X	M.G.RESISTOR	0 1/10W
C1	QEUC0JM-108Z	E.CAPACITOR	1000 6.3V
C2	QEUC0JM-108Z	E.CAPACITOR	1000 6.3V
C3	NDC21HJ-561X	CER.CAPACITOR	560p 50V
C5	NDC21HJ-561X	CER.CAPACITOR	560p 50V
L1	NQL024J-4R7X	COIL	4.7uH
L2	NQL024J-4R7X	COIL	4.7uH
CN103	QGF1003C1-16	CONNECTOR	16PIN
JK1	QNZ0157-001	JACK	Y/C BNC
JK4	QNN0251-001	JACK	PIN

6.36 EAR.J BOARD ASSEMBLY PARTS LIST [4][3]

SLK2093-03-00A [4][3]□□□□□□□

Symbol No.	Part No.	Part Name	Description
C401	NDC21HJ-221X	CER.CAPACITOR	220p 50V
C402	NDC21HJ-221X	CER.CAPACITOR	220p 50V
C403	NDC21HJ-221X	CER.CAPACITOR	220p 50V
C404	NDC21HJ-221X	CER.CAPACITOR	220p 50V
L401	NQL024J-4R7X	COIL	4.7uH
L402	NQL024J-4R7X	COIL	4.7uH
L403	NQL024J-4R7X	COIL	4.7uH
CN108	QGA1501C1-04	CONNECTOR	4PIN
JK401	QNS0153-001	JACK	EARPHONE

SECTION 7
PACKING

7.1 PACKING ASSEMBLY M 7

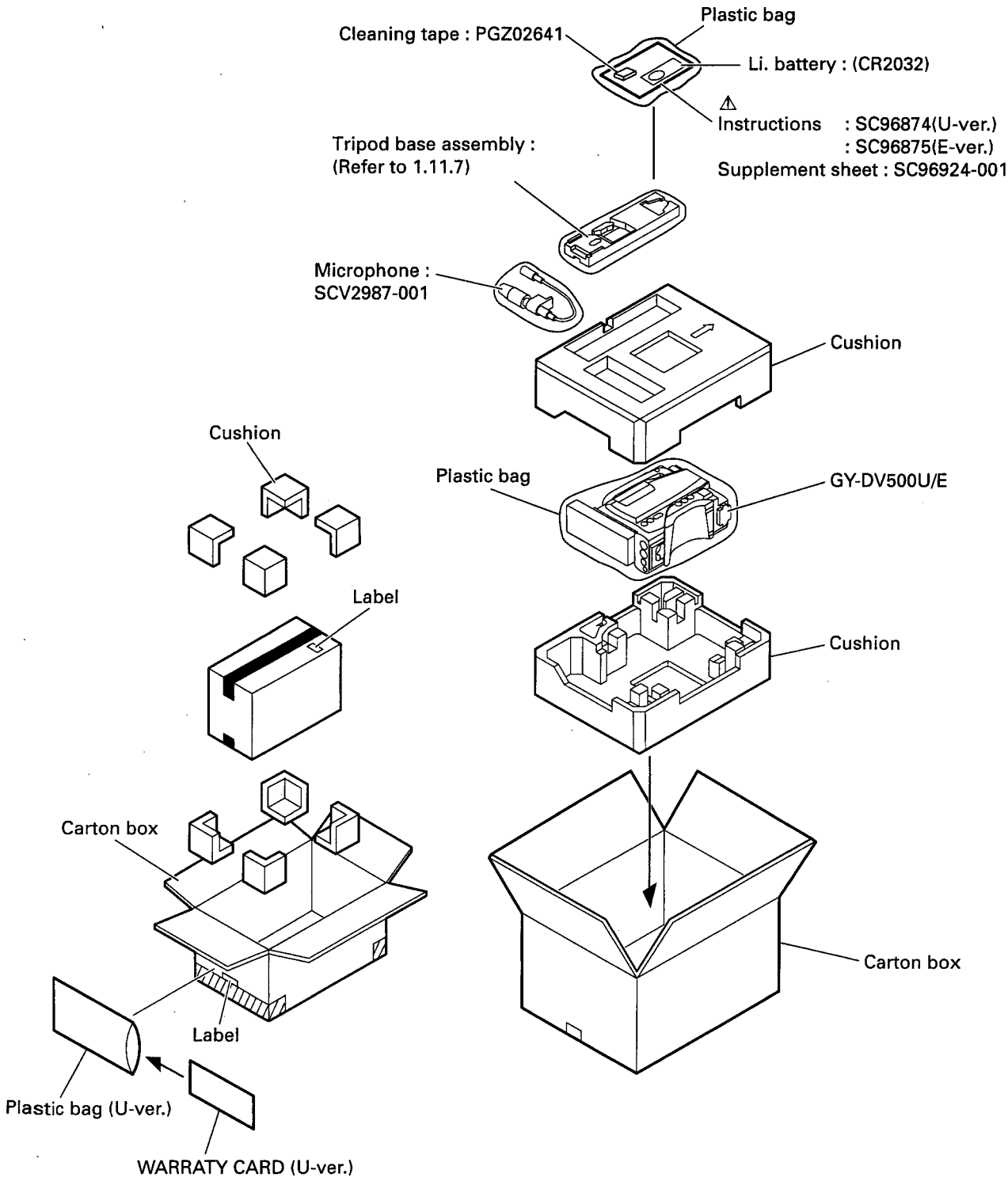

7.2 FACTORY SETTING OF SWITCH AND VR

□: Factory setting

SW and VR name	Factory setting		
AUDIO LEVEL VR	CENTER		
ZEBRA	[ON]	OFF	SKIN AREA
FILTER	[3200K]	5600K	5600 K+ND
POWER SW	ON	[OFF]	
VTR	SAVE	[STBY]	
GAIN	H	M	[L]
OUTPUT	BARS	CAM/AUTO KNEE OFF	[CAM/AUTO KNEE ON]
WHT. BAL	PRST	[A]	B
AUTO IRIS	BACK L	[NORMAL]	SPOT L
BLACK	STRETCH	[NORMAL]	COMPRESS
ALARM VR	CENTER		
MONITOR VR	CENTER		
MONITOR SELECT	CH-1	[MIX]	CH-2
LIGHT	[ON]	OFF	
COUNTER	CTL	[TC]	UB
TC GENERATOR	[PRESET]	REGEN	
	[FREE]	REC	
AUDIO LEVEL CH-1/CH-2	CENTER		
AUDIO SELECT CH-1/CH-2	[AUTO]	MANUAL	
AUDIO INPUT CH-1/CH-2	[FRONT]	REAR	
AUDIO IN CH-1/CH-2	[LINE]	MIC	MIC +48V ON

SECTION 8
DESCRIPTION OF NEW CIRCUITRY

8.1 OUTLINE OF DV

8.1.1 Features of DV

Table 8-1-1 outlines comparisons between DV and other digital VCR formats.

			D9 (Digital S)	DVC Pro	DV CAM	DV
Tape	Material		MP		ME	
	Width (inch)		1/2	1/4		
	Track pitch (μm)		20	18	15	10
Video	Sampling frequency (MHz)	Y	13.5			
		R-Y/B-Y	6.75		3.375	
	Sampling rate	NTSC	4 : 2 : 2	4 : 1 : 1		
		PAL		4 : 2 : 0 (Line Sequential)		
	Samples per line	Y	720			
		R-Y/B-Y	360	180 : NTSC,360 : PAL		
	TV lines per frame	NTSC	482	480		
		PAL	578	576 : Y , 288 : R-Y/B-Y		
	Quantization bits		8			
	Compression method		In-frame DCT			
	Compression		1/3.3	1/5		
Audio	Sampling frequency (kHz)		48	48(32)		
	Quantization bits		16	16(12)		
	Channels		4	2(4)		
	Compression		Non compressed			
Error correction code			Reed-Solomon integration code			
Modulation method			SI-NRZI , 24/25			

Table 8-1-1 Comparison of Digital VCR Formats

As shown in the above table, the major specifications of the DV are almost identical to the D9 (Digital S).
Differences lie only in the tape used, sampling rate and number of executed pixels.

(A) Video signal

High video quality thanks to the 4:1:1 (*4:2:0) component digital recording.

(Note) Descriptions marked * in the text and figures are PAL data.

• Luminance signal

The Y signal is sampled at 13.5 MHz so the Y signal bandwidth is about half the sampling frequency, or 6.75 MHz. This provides better resolution than S-VHS and current TV broadcasting (Y bandwidth of about 4.5 MHz).

• Chrominance signal

By recording the chrominance signal in a form divided into color difference signals R-Y and B-Y (component recording method), recording with excellent color reproduction and little color blur is achieved.

With VHS, the chrominance signal has been converted into a lower-frequency signal so that its bandwidth has been limited to 0.5 MHz. The DV has expanded the bandwidth by about 3 times to 1.68 MHz (3.375MHz/2) and records the chrominance components quite separately from the Y component. The sampling frequency of the R-Y and B-Y signals are 3.375 MHz (*6.75 MHz), which is 1/4 (*1/2) of the Y signal sampling frequency of 13.5 MHz. Based on this ratio, this recording method is referred to as 4:1:1 (*4:2:0 line sequential) digital component recording.

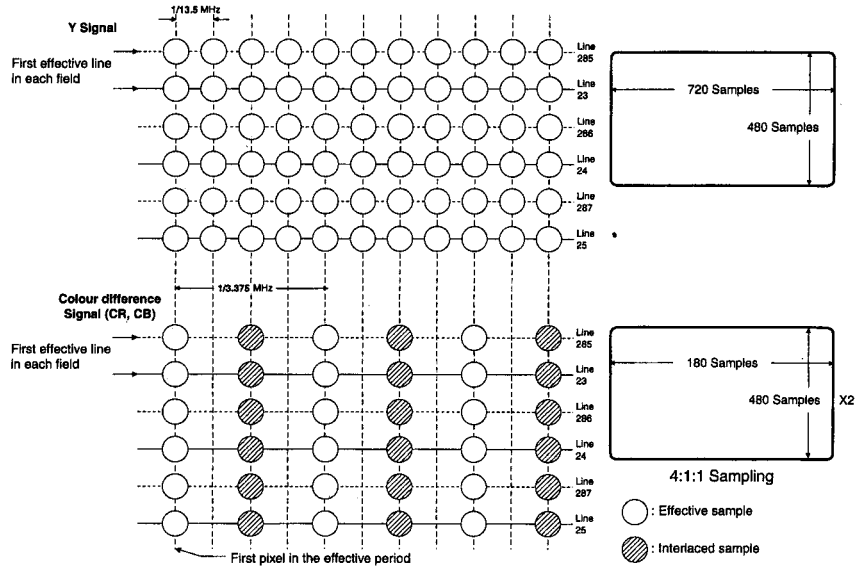

Fig. 8-1-1 4:1:1 Component Digital Recording

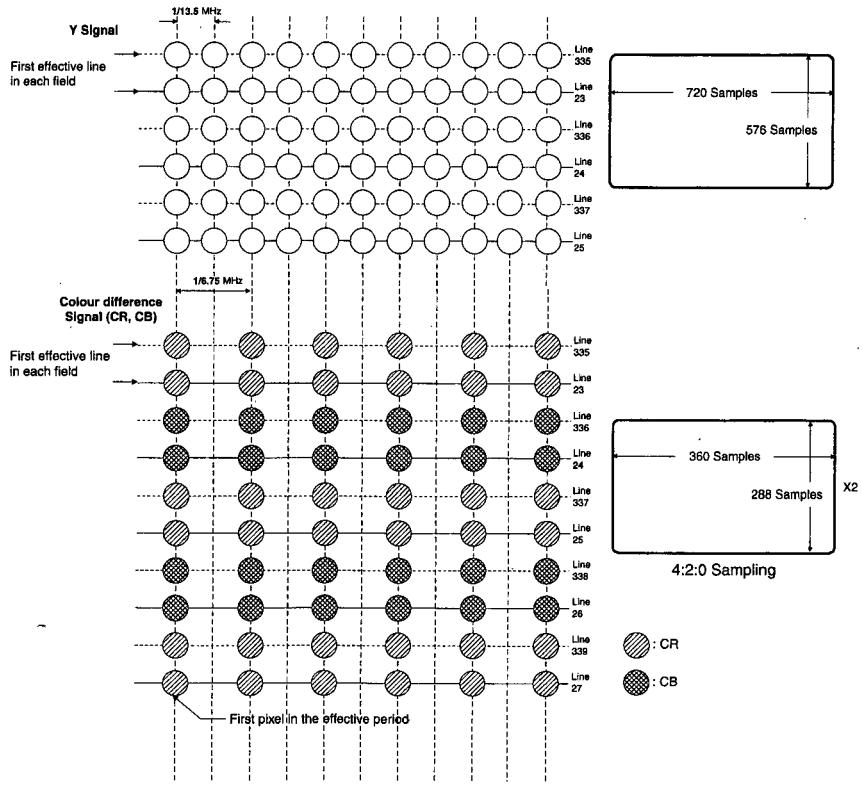

Fig. 8-1-2 *4:2:0 Component Digital Recording

(B) Audio signal

The DV format also records the audio digitally. Two recording formats (48 kHz, 32 kHz) are provided to allow selection according to the purpose. Compatibility with 44.1 kHz sampling is also provided for use in the reproduction of software tapes.

• **48 kHz, 16-bit high quality stereo mode**

This recording mode provides high audio quality equivalent to the DAT.

Although compression technology is used in video recording, the audio recording does not use compression.

• **32 kHz, 12-bit mode with a stereo dubbing capability**

This mode divides the audio area into two parts and records 12-bit stereo audio channels to both of them, or a total of 4 channels. This makes it possible to record 2 audio channels at the same time as performing video recording and to dub 2 additional audio channels while leaving the original audio channels.

(C) Other features

• **Video signal output**

The digital signal read out from a tape during playback is fed to the image memory to arrange the time axis before being output as the video signal. This makes it possible to reduce wow & flutter, which may be caused by head rotation irregularities or tape transport variations.

• **Timecode enabling editing**

The DV tape has a sub-code area for recording signals for use in editing. Timecodes are automatically recorded frame by frame in this area so that the video can later be edited on a per-frame basis. The sub-code area also includes the recording of index ID signals, which can be used in search and other operations later.

• **AUX data recording information on recording and shooting**

The video signal recording area on the tape records the signal called the AUX data together with the video signal. The AUX data contains information on the recording date and shooting conditions such as wide-screen shooting, and is recorded automatically during recording. Parts of the AUX data information can be displayed on the screen as required. The AUX data on the record mode, etc. is also recorded in the audio area in a similar way to the video area.

• **Digital interface for digital inputs/outputs (optional)**

All track data can be input or output directly without altering the digital format (IEEE1394 compliant).

DV terminals are provided to enable dubbing and editing using digital signals.

8.1.2 Tape Format of DV

Note) Descriptions marked * in the text and figures are PAL data.

The DV records the video and audio signals independently, in the video area and in the audio area respectively. With the video signal, the data of each frame is divided into 10 tracks (*12 tracks) before being recorded. Namely, the data of a frame is input to a memory, divided into 10 (*12), and recorded into 10 tracks (*12 tracks) using a 2-channel head by rotating the drum by 5 turns (*6 turns) in the period of one frame (33.3 ms/*40 ms) of a normal NTSC (*PAL) signal. The sub-code area records data including the timecode, recording date, index and absolute track number, and the ITI area records the reference signal of the absolute height of track (SSA) ad tracking signals. The DV does not use the tracking control track. The tracking system of the DV is called the 3-frequency (F0, F1, F2) digital pilot system, which records digital pilot signals F0 (0Hz), F1 (465 kHz) or F2 (697.5 kHz) on every track during recording. When the F0 track is reproduced, the DV controls the tracking servo so that the crosstalk levels of the pilot signals (F1, F2) in the tracks on the left and right of the F0 track become identical. The pilot signals are recorded over all the tracks.

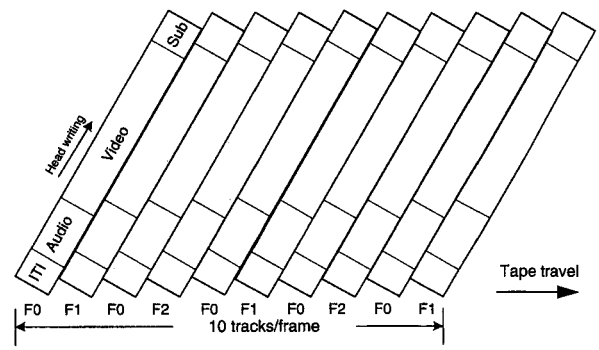

Fig. 8-1-3 NTSC Format DV Tape

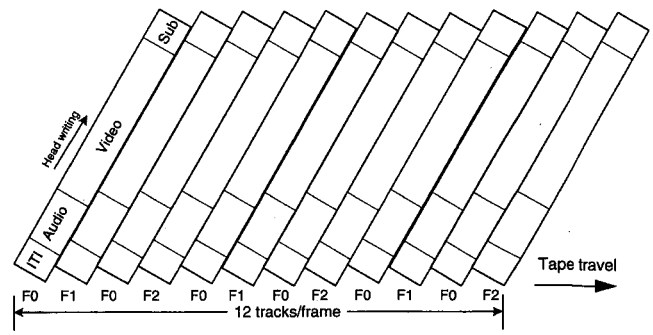

Fig. 8-1-4 PAL Format DV Tape

(A) Mini-DV cassette tape

The DV cassette uses metallic magnetic particles so that stable, high-power signals can be obtained from even very thin tracks. Metal tapes include the metal particle coated (MP) tapes and metal evaporated (ME) tapes. The Metal tape used with the DV is the ME tape which features a thin magnetic layer and low demagnetization.

• ID board and memory-in cassette (MIC)

The DV cassette has 4-contact terminals on the back label side edge of the shell. These terminals are called the "ID board terminals", and the values of resistance across the terminals express basic cassette ID (BCID) information such as the tape thickness, tape type and applications. The DV cassette can optionally incorporate a memory for storing the BCID as well as the content information. In this case, these 4 terminals are used as the serial communication terminals for the storage and readout of cassette memory contents.

As described above, the ID board terminals are used in two ways and the cassettes are available as those with or without internal memory according to the usage. The GY-DV500 and BR-DV600 are not avairable with this optional function, so information such as the content information cannot be written or read even when a cassette with internal memory is used with them.

All these models do through these terminals is read the BCID of every cassette.

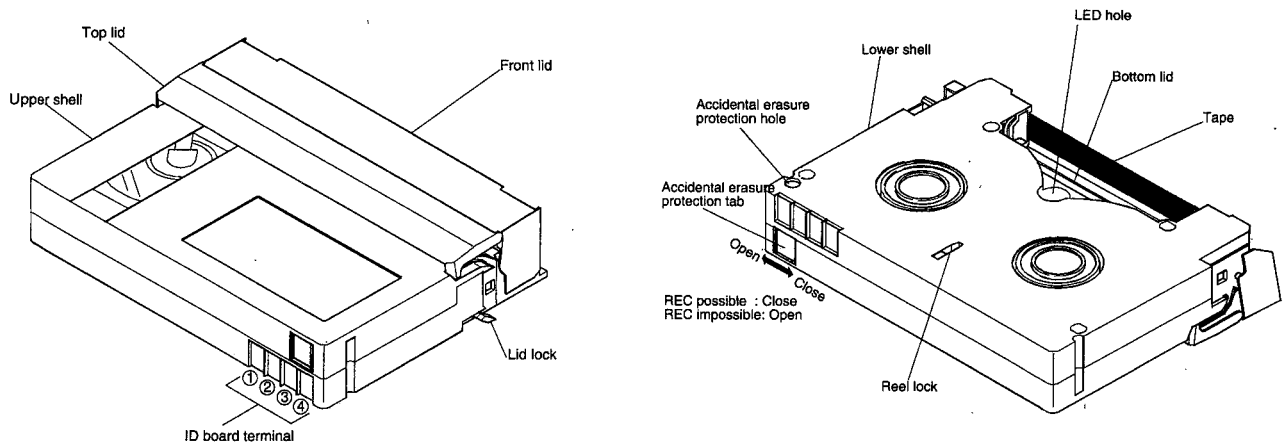

Fig. 8-1-5 External View of Mini-DV Cassette

Terminal No	ID Board			MIC
	Contents		Resistor value	Function
1	Tape thickness	7μm	Open	VDD
		Reserved	1.80kΩ ± 0.09k	
2	Tape type	ME	Open	SDA
		Reserved	6.80kΩ ± 0.34k	
		For cleaning	1.80kΩ ± 0.09k	
		MP	S/C	
3	Tape grade	For consumer	Open	SCK
		For professional	6.80kΩ ± 0.34k	
		Reserved	1.80kΩ ± 0.09k	
		For PC	S/C	
4	GND	–	–	GND

Table 8-1-2 ID Board Terminal Standard

(B) Main Standard of DV Tape Format (SD)

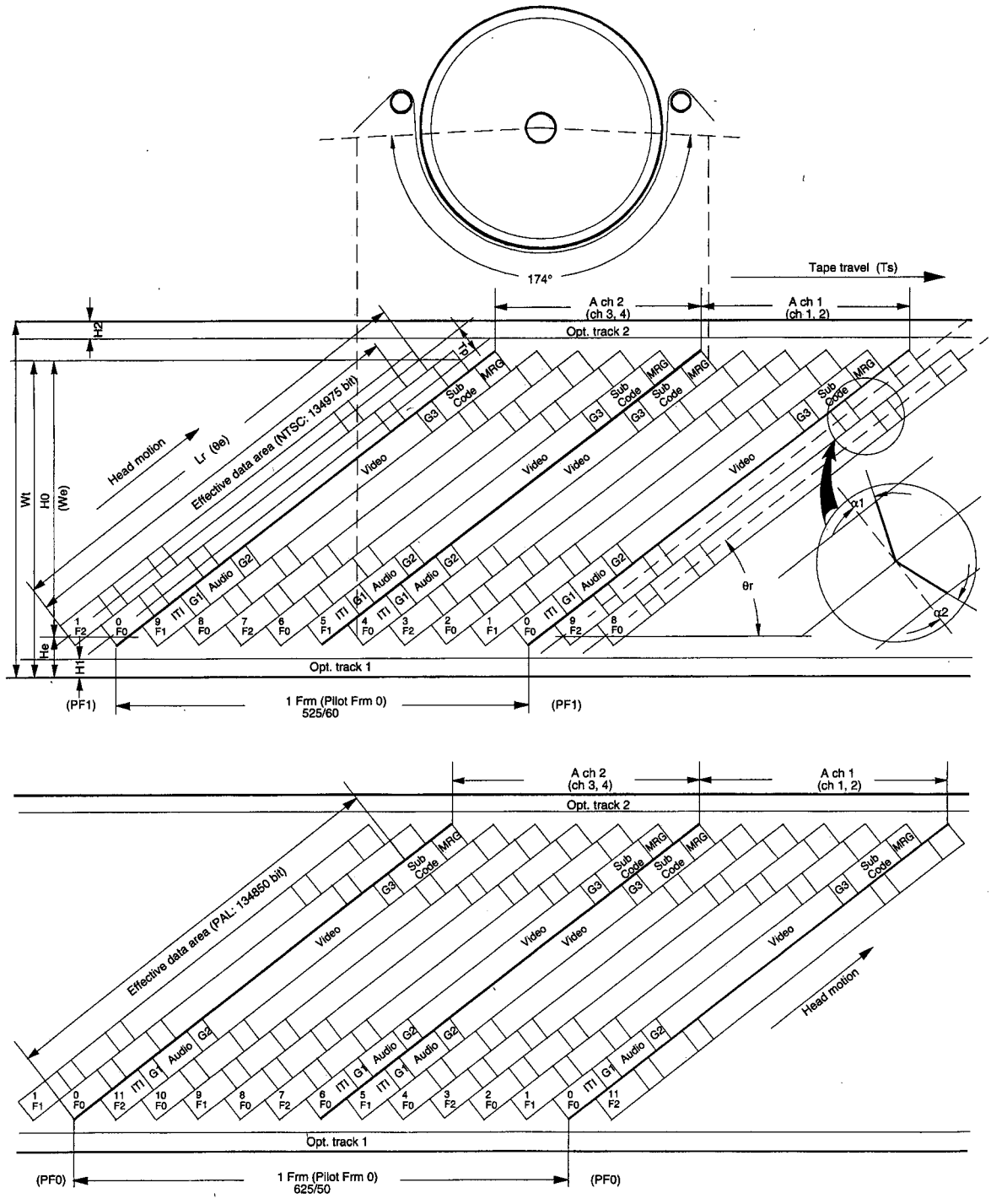

Fig. 8-1-6 Main Standard of DV Tape Format (SD) (Track Pattern)

8.2 MAJOR SIGNAL PROCESSING OPERATIONS OF DV

Fig. 8-2-1 shows the basic configuration of the major signal processing circuitry of the DV in the form of a block diagram.

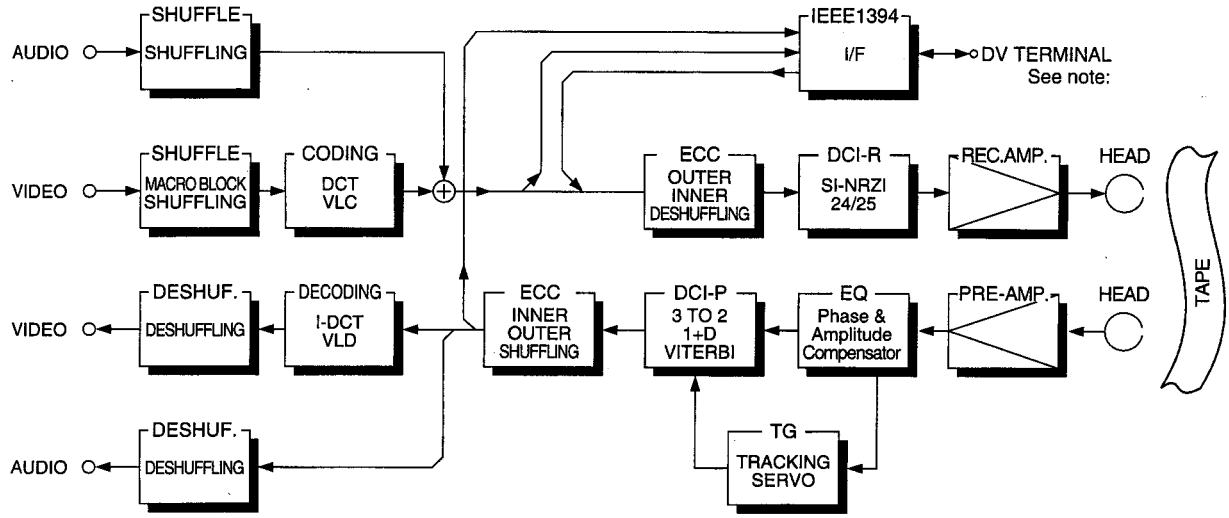

Note : PAL model is not available the signal output.

Fig. 8-2-1 Basic Configuration of Major Signal Processing Circuitry of DV

8.2.1 Flow of Video and Audio Signals in Recording Circuitry

The video and audio signal inputs/outputs shown in Fig. 8-2-1 are sampled digital signals.

The input digital video signal is shuffled block by block, so that deviations in the compression rate of the picture can be prevented. This is achieved by gathering data from various positions in the picture and compressing it. When the video signal is supplied to the ECC block for error correction later, de-shuffling is applied to return the data to the original positions in the video signal. The shuffled video signal is coded. The coding consists of replacing the image signal in the conversion block composed of multiple pixels with signals without correlation by means of discrete cosine transform (DCT).

The DCT operation consists of dividing the picture into blocks (each composed of 8 x 8 pixels) and obtaining the transform coefficient, which indicates the amount of components of the previously determined basic image pattern (64 pixels) in each block.

The VLC (Variable Length Coding) quantizes the DCT transformed signal and applies entropy coding to the quantized signal. The coding technique used here performs Run Length coding first, then applies Huffman coding.

The audio input signal is also shuffled block by block in the same way as with the video signal, but the audio signal is not compressed.

The video and audio signals are input to the ECC block, where error-correcting codes are appended to them. The error-correcting codes use product codes obtained by double coding of the Reed-Solomon integration codes.

The DCI-R (Digital Channel Interface for Recording) block performs channel coding of the recorded signals. It performs what is usually called modulation by transforming a series of digital data composed of "1" and "0" to match the properties of magnetic recording systems.

8.2.2 Flow of Video and Audio Signals in Playback Circuitry

When a digital VCR plays a recorded signal, the frequency response of the low-frequency and high-frequency components is degraded. The degradation in the frequency response of the low-frequency components is because the played signal becomes a differential waveform and a rotary transformer is used. That in the frequency response of the high-frequency components is caused by the performance of the recording tape itself and by the gap between the tape and head during recording/playback.

When a tape in which 1-bit pulses are recorded is played while the frequency response is degraded, the pulse duration is expanded and intersymbol interference results. The equalizer is used to suppress the intersymbol interference and reduce code errors.

The DCI-P (Digital Channel Interface for Playback) block demodulates the signal, which has been coded for recording and turns it into a signal that can be subjected to error correction.

The ECC (Error Correcting Codes) block corrects errors while performing shuffling. The audio signal is then de-shuffled and output. The video signal is sent to the decoding block where the signal compressed by coding is expanded by means of decoding, and returns to a digital signal. The digital video signal is then de-shuffled before being output.

8.3 VIDEO/AUDIO SIGNAL PROCESSING IN RECORDING CIRCUITRY

8.3.1 Division into Blocks

As shown in Fig. 8-3-1, data of each frame is divided into macroblocks (MBs) (8 x 8 pixels) which are the basis of the DCT circuitry. Since the luminance signal and two color difference signals are sampled with different frequencies, 4-luminance signal blocks and each of the color difference signal blocks occupy the same position and area in the picture. When data of any one of the 4-luminance signal blocks is lost, the data in other blocks becomes meaningless. Therefore, the signals of every 6 blocks are processed as a single processing unit and recorded onto tape.

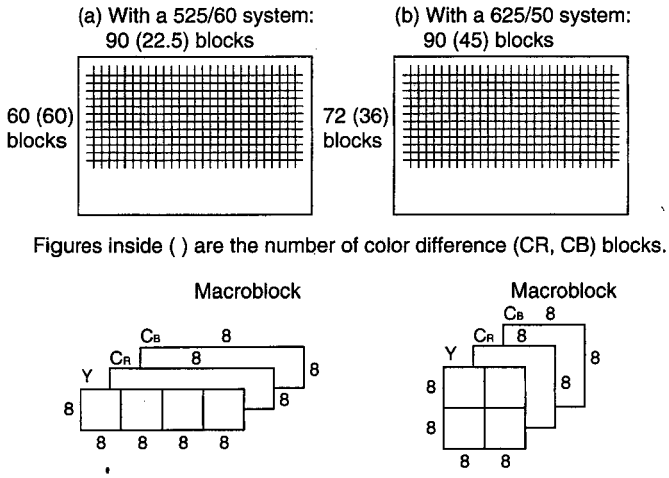

Fig. 8-3-1 Division into Blocks, Macroblock

The macroblock is a group composed of the 6 blocks.
The data divided into blocks is processed by the DCT coding as described later, and the video-recording rate is compressed to 25 Mbps. In fact, however, the data of each frame is compressed to the specified number of bits, which are recorded onto the specified number of tracks on tape. Namely, when 25 Mbps is converted into the number of bits per frame, the following number of bits are recorded onto 10 (NTSC) or 12 (PAL) tracks:

$(25 \times 10^6)/30 = 833333$ bits ..... (NTSC)
$(25 \times 10^6)/25 = 1000000$ bits ..... (PAL)

As seen above, the data in each frame is compressed so as not to exceed the specified number of bits calculated based on the video-recording rate. This is referred to as length fixation. Although the length of the data of a frame is fixed so as not to exceed the calculated number of bits, the actual length fixation is applied per 5 macroblocks. In other words, the length of the data of 5 macroblocks is fixed so as not to exceed the following number of bits:

833333 x 5/1350 = 3086 bits ..... (NTSC)
1000000 x 5/1620 = 3086 bits ..... (PAL)

The 5 macroblocks used as the unit of length fixation is referred to as a video segment.

8.3.2 Shuffling (Video)

The 5 macroblocks composing a single video segment is collected from a picture by means of shuffling according to a specified rule.
The objective of shuffling lies in making uniform the quantity of information that is contained in the 5 macroblocks in a video segment. The image information of a frame is not usually distributed evenly in the picture, but there are segments with a large amount of information and those with a small amount of information as shown in Fig. 8-3-2.

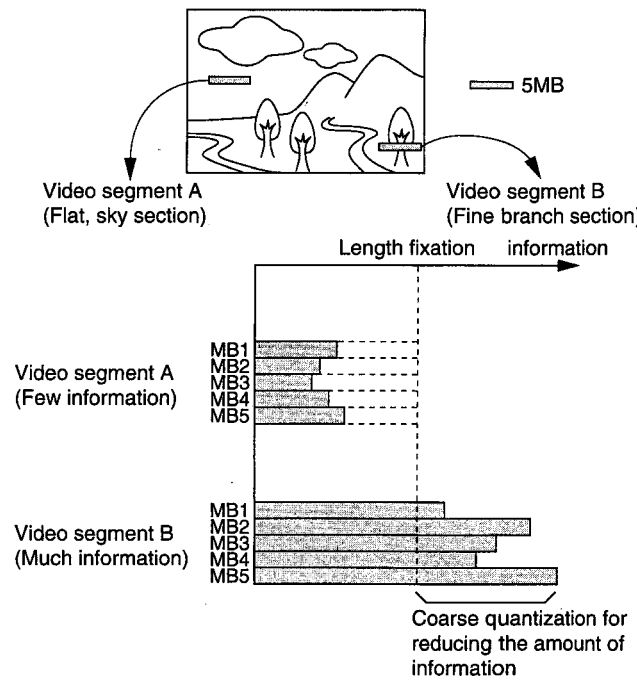

Fig. 8-3-2 Distribution of Information in a Picture

As a result, if the fixed-length data obtained from 5 sequential macroblocks uses the same number of bits for each macroblock, distortion due to compression or expansion of data would be noticeable. This would depend on the screen segments (distortion is less noticeable in the segments with little information but noticeable in segments with much information). To prevent this by making the information uniform across the video segments and making distortion less noticeable, shuffling is performed in the picture.
The shuffling is performed based on the rule shown in Fig. 8-3-3.
Each picture is divided vertically into the same number as the number of macroblocks in a video segment (5), and divided horizontally into the same number as the number of tracks used to record the data of 1 frame onto tape (NTSC: 10, PAL: 12).
The blocks divided in this way are referred to as superblocks.

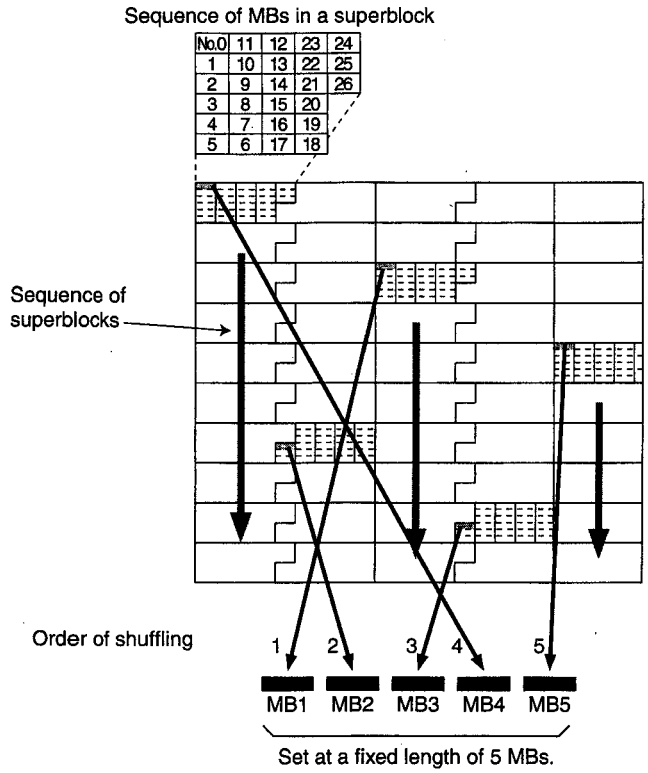

Fig. 8-3-3 Shuffling Technique (Example with 525/60)

With shuffling, the first macroblock (No. 0) in each of the 5 superblocks are collected to form a video segment as shown in Fig. 8-3-3, and the next video segment is formed by collecting the first macroblocks (No. 1) of the same 5 superblocks. When all of the macroblocks in the 5 superblocks have been collected, data collection of the next 5 superblocks starts.

8.3.3 DCT

The video segments formed by shuffling are DCT transformed per (8 x 8) blocks. There are two DCT transform modes including the stationary mode and the dynamic mode.

(1) Stationary mode (8 x 8 DCT mode)
This is the basic mode, executing (8 x 8) DCT transform to every (8 x 8) pixels in blocks.

(2) Dynamic mode (2 x 4 x 8 DCT mode)
The (8 x 8) blocks are divided into two (4 x 4) blocks called fields 1 and 2, and a (4 x 8) DCT transform is applied to every (4 x 8) pixels.
The following paragraph explains this mode by taking the case in which an object moves toward the right as an example.

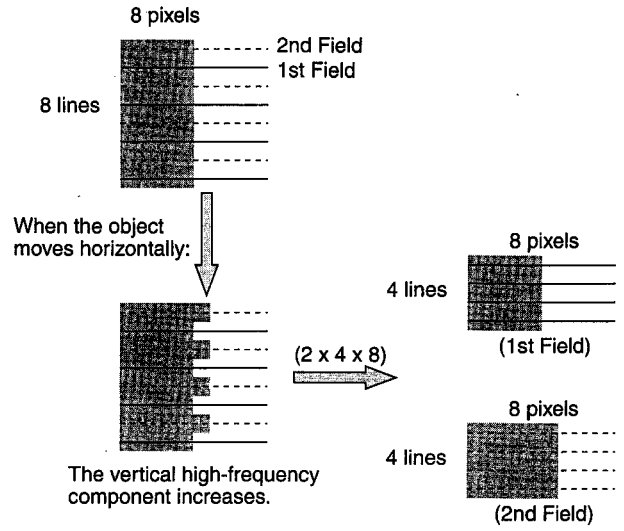

Fig. 8-3-4 (2 x 4 x 8) DCT Transform in Motion Mode

When the object does not move, the data in the horizontal direction contains the high-frequency component but the data in the vertical direction contains only the DC current. On the other hand, when the object moves in the horizontal direction, the position of the object at the time of 1st field scanning is different from that at the time of 2nd field scanning, so the picture of the object in a frame appears to have ridged edges. The high-frequency component increases in the vertical direction data as well as in the horizontal direction data. In such a case, the (8 x 8) blocks are divided into two pairs of (4 x 8) blocks for fields 1 and 2, and (4 x 8) DCT transform is applied to every (4 x 8) pixels. This method makes it possible to reduce any increases in the high-frequency component in the vertical direction data and prevents a drop in the compression rate.
Whether a DCT transform is performed in the stationary mode or in the dynamic mode is decided by detecting the (8 x 8) blocks in each video segment by the motion detector circuit located before the DCT transform circuit.
The data of a block in stationary mode is composed of one DC component and 63 AC components. But, in dynamic mode each one of the two (4 x 8) blocks is composed of a DC component and 31 AC components. To allow the dynamic mode data to be processed in the same way as the stationary mode data, the dynamic mode processing calculates the sum and differences of the factors of the same order and form (8x 8) blocks as shown in Fig. 8-3-5.

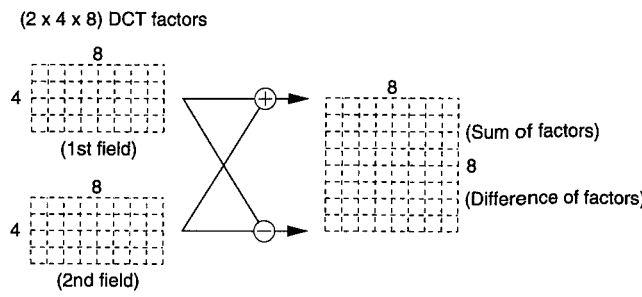

Fig. 8-3-5 Processing of DCT Transform Factors in Dynamic Mode

The above processing allows both the dynamic mode data and stationary mode data to be handled as data composed of one DC component and 63 AC components in the subsequent quantization processing.

8.3.4 Quantization

(A) Data quantity estimation

After all of the blocks in a video segment have been DCT transformed, the video segment is stored in the buffer. At this time, the data quantity estimation block selects the quantizer for use in quantizing the video segment.

With DCT transform, normalization is performed so that the DCT factors have a 10-bit dynamic range for the 8-bit pixel block. The DCT factors are divided by an integer called the quantization step and allocated to a smaller number of bits before being subjected to variable-length coding (VLC). This operation (division) is referred to as re-quantization, or simply quantization. The quantization reduces the values of the factors, turning many of 0 in the high frequencies. As the VLC in the subsequent stage performs code allocation by forming value 0 run lengths and the non-0 factor after it into a group, so the quantization improves the coding efficiency. As the VLC consists of simply allocating codes to factors, the code quantity (number of bits) is controlled by the VLC block.

(B) Quantization

Each quantizer is composed of a set of 4 quantization steps as shown in Fig. 8-3-6, and the factors in a block are divided into 4 areas. The data is quantized in the 4 areas using different quantization steps. The factors are shifted from low-frequency factors to high-frequency factors as the area number increases, so the quantization of high-frequency factors are coarser than for low-frequency factors. This utilizes the fact that the distortion of high-frequency factors is less noticeable to human vision even when they are coarsely quantized.

(8 x 8) DCT

Vertical direction \ Horizontal direction	0	1	2	3	4	5	6	7
0	DC	0	0	1	1	1	2	2
1	0	0	1	1	1	2	2	2
2	0	1	1	1	2	2	2	3
3	1	1	1	2	2	2	3	3
4	1	1	2	2	2	3	3	3
5	1	2	2	2	3	3	3	3
6	2	2	2	3	3	3	3	3
7	2	2	3	3	3	3	3	3

(2 x 4 x 8) DCT

Vertical direction \ Horizontal direction	0	1	2	3	4	5	6	7	
0	DC	0	1	1	1	2	2	3	(Sum)
1	0	1	1	2	2	2	3	3	
2	1	1	2	2	2	3	3	3	
3	1	2	2	2	3	3	3	3	
4	0	0	1	1	2	2	2	3	(Difference)
5	0	1	1	2	2	2	3	3	
6	1	1	2	2	2	3	3	3	
7	1	2	2	3	3	3	3	3	

Quantizer No.	Class No. 0	1	2	3	Area No. 0	1	2	3
15				1	1	1	1	
14				1	1	1	1	
13				1	1	1	1	
12	15			1	1	1	1	
11	14			1	1	1	1	
10	13		15	1	1	1	1	
9	12	15	14	1	1	1	1	
8	11	14	13	1	1	1	2	
7	10	13	12	1	1	2	2	
6	9	12	11	1	1	2	2	
5	8	11	10	1	2	2	4	
4	7	10	9	1	2	2	4	
3	6	9	8	2	2	4	4	
2	5	8	7	2	2	4	4	
1	4	7	6	2	4	4	8	
0	3	6	5	2	4	4	8	
	2	5	4	4	4	8	8	
	1	4	3	4	4	8	8	
	0	3	2	4	8	8	16	
		2	1	4	8	8	16	
		1	0	8	8	16	16	
		0		8	8	16	16	

Fig. 8-3-6

(C) Classification

Each block in a video segment is classified into one of 4 classes before being quantized. The quantization steps of the quantizers vary depending on the class numbers (see Fig. 8-3-6). Table 8-3-1 shows the definitions of the 4 classes.

Class No.	Definition
0	Block with which quantization distortion after compression is highly noticeable. The absolute value of the AC factor should not exceed 225.
1	Block with which quantization distortion after compression is less noticeable than Class 0. The absolute value of the AC factor should not exceed 225.
2	Block with which quantization distortion after compression is less noticeable than Class 1. The absolute value of the AC factor should not exceed 225.
3	Block with which quantization distortion after compression is little noticeable or the absolute value of the AC factor exceeds 225.

Table 8-3-1 Definitions for Classification

The Table 8-3-1 means that a block with a larger class number has a more approximate degree of definition (activity). The data in such a block is quantized relatively roughly to compress the data quantity. Rather approximate quantization of picture areas with low activity does not cause odd sensations for the human vision, but approximate quantization of those with high activity does cause odd sensations. The blocks with low activity in each segment are quantized as roughly as possible with a reduced number of allocated bits, unless the odd sensations are not felt. However, the blocks with high activity are quantized using an increased number of allocated bits to improve the picture quality experienced by the human vision.
A block containing factors with a larger absolute AC factor than 255 is classified as Class 3, and subjected to an operation called initial shifting before quantization. This operation divides an AC factor over 255 by 2 so that errors do not occur in the VLC operation.

Class No.	0	1	2	3
Initial shifting	Not applied	Not applied	Not applied	Applied

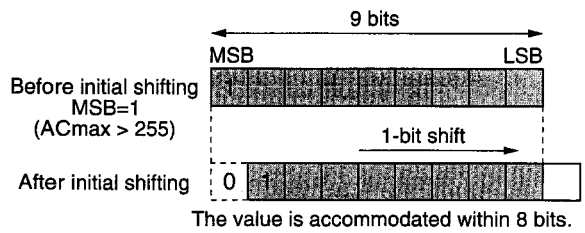

Fig. 8-3-7 Initial Shifting

While the AC factor before quantization consists of 10 bits, or 9 bits excluding the sign bit, the VLC in the subsequent stage can codify a non-0 factor value only into an 8-bit code. Initial shifting is performed to deal with this. As a result, a factor that has a value in the 9th bit (SMB) (i.e. a factor over 255) can be accommodated in 8 bits and processed by VLC. Fig. 8-3-6 shows that an increase in the class No. increases the quantization steps in the same quantizer No. or that quantization of a larger class No. is more approximate.
Although the quantization steps of Class 2 look less than for those of Class 3, this is because the Class 3 data has been subjected to initial shifting before quantization. The actual quantization steps of Class 3 are more approximate than in those of Class 2.

8.3.5 VLC

After division into (8 x 8) blocks by DCT transform, the energy of pixels are concentrated in the DC component and the vertical and horizontal vertical factors become almost null. To code these factors, coding uses a technique for varying the code length according to the incidence of the factors.
This coding technique varying the code length is referred to as variable length coding (VLC).

(A) Entropy coding

As the VLC achieves efficient coding by allocating short codes to data with a high DCT factor incidence and long codes to data with a low incidence, it is sometimes called the entropy coding. The entropy coding can be expressed with an entropy function.

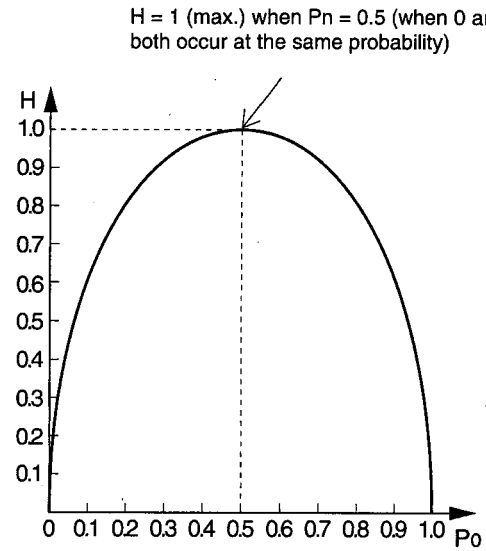

Fig. 8-3-8 Entropy Function

When VLC approaches the above function, it is regarded as coding with a high compression rate.

(B) Huffman coding

The DV uses Huffman codes to improve the compression efficiency. The Huffman codes determines the minimum average code length of information with a known incidence probability. Table 8-3-2 shows the method of construction of Huffman codes. The symbols in the table should be regarded as the levels of pixel values.

Symbol	Incidence	Construction Procedure	Code Word
1	0.49		0
2	0.14		100
3	0.14		101
4	0.07		1100
5	0.07		1101
6	0.04		1110
7	0.02		11110
8	0.02		111110
9	0.01		111111

Table 8-3-2 Construction of Huffman Codes

The Huffman coding uses the following procedure.

(1) Information source symbols 1 to 9 are arranged in the order of incidence probability.

(2) For the symbol with the lowest incidence and that with the second-lowest incidence, "0" is allocated to one and "1" is allocated to the other. (Which of the two symbols is "0" and which is "1" can be decided arbitrarily.)

(3) Then, the above two symbols are considered to be joined together as a single symbol. The incidence probability of the joined symbols should be equal to the sum of the incidence probabilities of the two symbols before joining.

(4) By considering the joined symbols as new individual symbols, these symbols and other symbols (which should exclude the two symbols which were joined) are rearranged in the order of incidence probability.

(5) Steps (2) to (4) are repeated until the number of symbols becomes 1.

(6) The values (0 or 1) allocated to the original symbols in step (2) are read in the reverse order. The read values form the code word for the symbols.

A Huffman code constructed in this way can be decoded instantaneously because, by following the bits one by one from the first bit at the time of decoding, the end of a code word can be determined without referring to the head of the next code word.

As the VLC used with the DV is based on Huffman coding combined with run length coding, it is called "modified 2-dimensional Huffman coding".

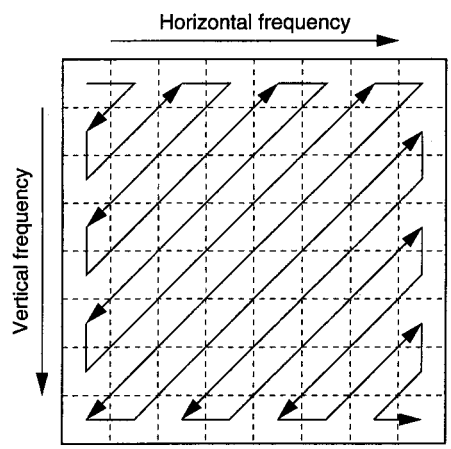

Fig. 8-3-9 Zigzag Scanning of DCT Factors

Among the factors transformed by 2D DCT, the 63 AC factors other than the DC component factor are rearranged by zigzag scanning as shown in Fig. 8-3-9. When the AC factors are rearranged in the order of scanning, the result is as shown in Fig. 8-3-10, where the scanned factor series is divided into a group of sequential 0 factors followed by a group of non-0 factors. A code called the EOB (End Of Block) is appended after the last non-0 factor scanned.

After the factors are transformed into a group of 0-value run length and a group of non-0 factor values, a Huffman code table is compiled according to the incidence probabilities of these groups and VLC is applied based on this.

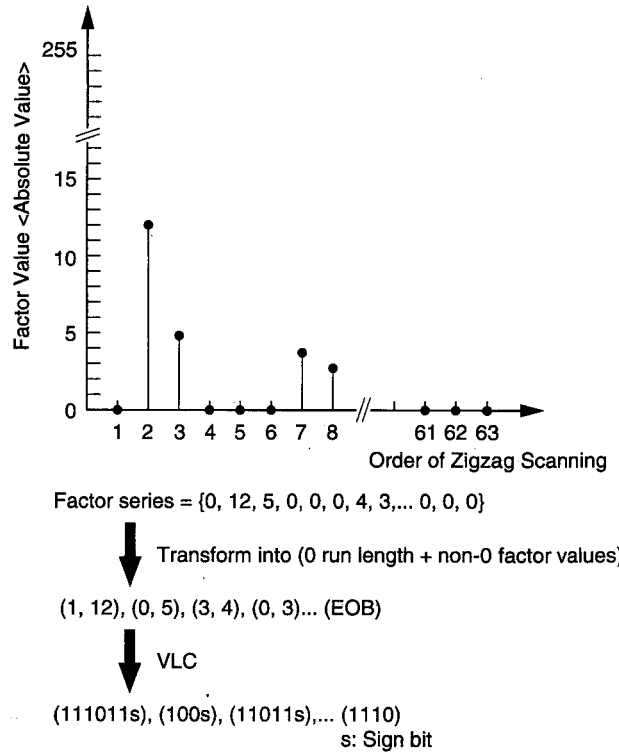

Fig. 8-3-10 2D Huffman Coding

8.3.6 Shuffling (Audio)

Unlike the video signal, the audio signal is not compressed. It is subjected only to shuffling as preparation for the ECC.

Table 8-3-3 shows the basic modes of the DV.

Mode	Channels	Sampling Frequency	Quantization
48 k	2	48 kHz	16-bit linear
44.1 k		44.1 kHz	
32 k		32 kHz	
32 k	4	32 kHz	12-bit nonlinear

Table 8-3-3 Basic Audio Modes

In the 2-channel modes, the quantization is 16-bit linear and the sampling frequency can be selected from 48 kHz, 44.1 kHz or 32 kHz. One of the 2 channels is recorded in the first 5 tracks of the 10 tracks of an NTSC frame (first 6 tracks of the 12 tracks of a PAL frame) after shuffling. Therefore, when an error occurs with a track, 1/5 (or 1/6) interpolation is applied.

8.3.7 De-shuffling

The compressed video data is recorded on tracks on tape. The video data recording area of each track is divided into sub-units called the sync blocks (SBs). The number of SBs where video data is recorded is 135 per track, and the number of SBs per frame is:

135 x 10 = 1350 ..... (NTSC)
130 x 12 = 1620 ..... (PAL)

These values are equal to the number of macroblocks per frame. Therefore, the compressed video segment data (5 macroblocks) is packed into 5 SBs and recorded.

Fig. 8-3-11 shows the packing of video segment data into 5 SBs.

<Step 1>

- The macroblock data is packed into the specified area (fixed area) on a per-DCT block basis.
- Overflow data is stored in the macroblock memory.
- This step is performed for each macroblock.

<Step 2>

- The data in MB memory is packed in the vacant area of the same SB.
- Overflow data is stored in the VS (Video Segment) memory.
- This step is performed for each macroblock.

<Step 3>

- The data in theVS memory is packed in the vacant areas in the 5 macroblocks.

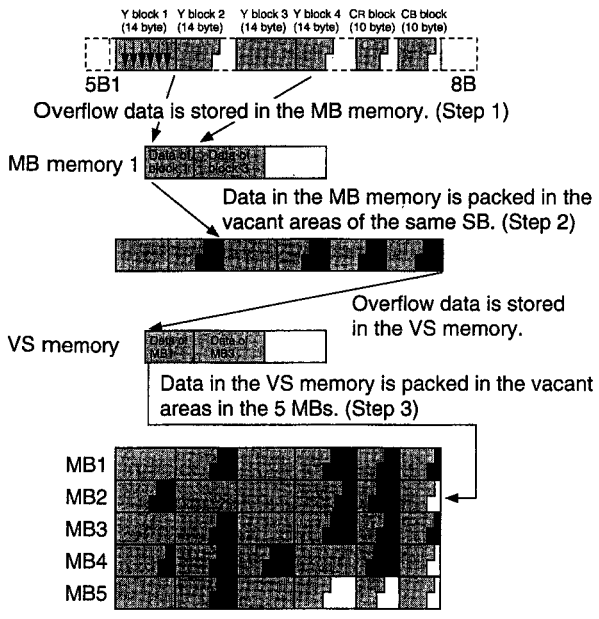

Fig. 8-3-11 Packing of Compressed Data in SB

The section corresponding to the data area of each SB(unit) is divided into the number of DCT blocks per macroblock (fixed areas) and the data in the DCT blocks is packed in priority in the fixed areas. When data packed in 5 units is recorded, it is not recorded in 5 sequential SBs.

After the data in each video segment has been packed in 5 units, the data is de-shuffled before being recorded. The data of a frame, composed by the de-shuffling, is recorded sequentially on the SBs on tape as shown in Fig. 8-3-12.

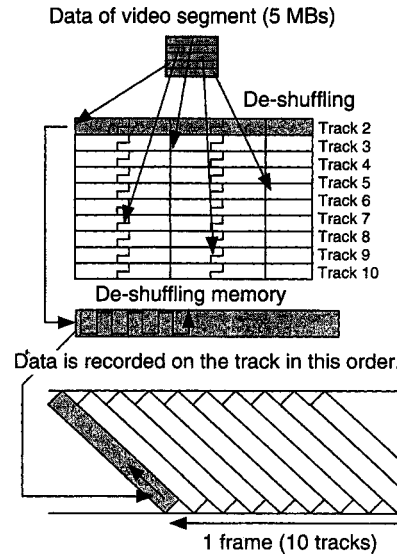

Fig. 8-3-12 De-shuffled Recording (NTSC)

The reason why the shuffled data is not recorded on tape but de-shuffled before being recorded is to make the picture quality in variable-speed playback easier to view.

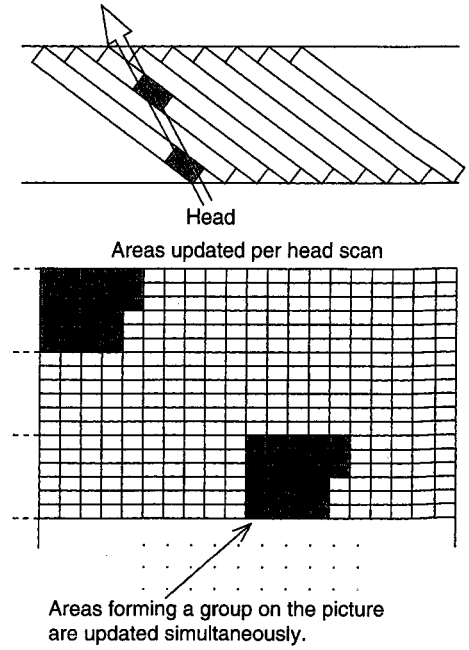

Fig. 8-3-13 Picture Updating in Variable-Speed Playback

Fig. 8-3-13 shows the picture updating by data reproduced during variable-speed playback. The picture is easy to see because the de-shuffling before recording causes the reproduced data to form a sequential group.

8.3.8 Error Correction

Error correction consists of correcting errors occurring in the data. For this purpose, data is provided with regularity by adding redundant parts. The error correction codes are the mathematical systematization of how to add the redundant parts, and the theory of this is referred to as the coding theory.

(A) Principles of error detection and error correction

With the DV, it may happen that data recorded as "0" is reproduced as "1" or data recorded as "1" is reproduced as "0" due to thermal noise of the recording/playback amplifier or dust or scratches on the tape surface. The error correction detects and corrects such code error produced in the process of recording or playback.

In the following, the principles of error detection and error correction will be explained by using codes composed by adding a 3-bit redundant part to every 2 bits of data as shown below.

Information part		Information part	Parity check part
(00)	→	(00	110)
(01)	→	(10	101)
(10)	→	(10	011)
(11)	→	(11	111)

With the coding theory, the part for data is called the information part, the redundant part is called the parity check part, and the total of information part and parity check part is called the code word. The operation of transforming the information part into code word is referred to as coding.

Let us assume that a code word (00110) corresponding to data (00) has been recorded and is reproduced with an error in 1 bit (01110). When the reproduced series is compared with previously defined 4 code words, it may be known that the former coincides with none of the latter. These are the principles of error detection.

When the above situation is verified in more detail, it can be established that the reproduced series (01110) is different by 1 bit from the code word (00110) and by 2 or more bits from other code words.

The fact that a code word is most similar to the reproduced series means that the probability that it is the recorded code word is highest. Therefore, coding errors can be corrected by considering that the most similar code word to the reproduced series is the recorded code word. These are the principles of error correction.

The operation of correcting errors in the reproduced series is referred to as decoding.

(B) Hamming distance

The error detection and correction capabilities of error correction coding can be defined in terms of the hamming distance between the code words. The hamming distance is the number of dissimilar components when two code words are compared component by component. For example, assuming that code word (00110) is C_1 and code word (01101) is C_2, hamming distance dH (C_1, C_2) is 3. If code word (10011) is C_3 and code word (11111) is C_4, hamming distance dH (C_3, C_4) becomes 2.

Fig. 8-3-14 shows the scheme of the relationship between the error detection and correction capabilities and the hamming distance.

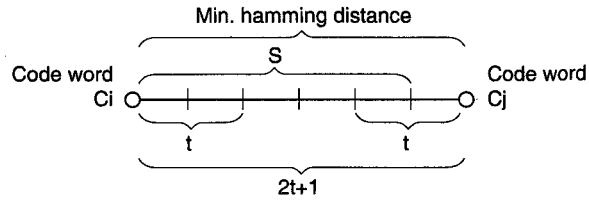

Fig. 8-3-14 Expressions of Error Detection and Correction Capabilities by Hamming Distance

To enable error correction coding, detect all of S or more errors, the minimum value of the hamming distance between code words (minimum hamming distance) should be S + 1. This is because, if the minimum hamming distance is less than S, code word Ci could be turned into another code word Ci if there are S error items.

Similarly, to correct t or fewer errors, the minimum hamming distance between code words should be $2t + 1$ or more. This is because, if the minimum hamming distance is less than $2t$, code word Cj which has a shorter hamming distance than Ci would exist if t error items occur with Ci. The hamming distances between the code words of the above-mentioned code are:

d_H ((00110), (01101)) = 3
d_H ((00110), (10011)) = 3
d_H ((00110), (11111)) = 3
d_H ((01101), (10011)) = 4
d_H ((01101), (11111)) = 2
d_H ((10011), (11111)) = 2

Therefore, the minimum hamming distance between these code words is 2. Thus, as the number of errors that can be detected is:

S = 1 (because S + 1 = 2)

This means that the error of a bit can be detected.

It was described above that the error of a bit in code word (00110) can be corrected. This is because the minimum hamming distance between only code word (00110) and other code words is 3. Therefore:

t = 1 (because $2t + 1 = 3$)

However, correction of error of a bit is not possible with other code words, with which only error detection is possible.

(C) Simple error correction codes

Examples of simple error correction codes will be described in the following.

(1) Simple parity check code

The parity check code is composed of a k-bit information part and 1-bit parity check part. The code with which parity is selected so that the number of "1" contained in a code word is an even number is referred to as the even parity code. That with which parity is selected so that the number of "1" contained in a code word is an odd number is referred to as the odd parity code. For example, a 3-bit code may have even parity codes as follows:

(00) → (000)
(01) → (011)
(10) → (101)
(11) → (110)

All of the hamming distances between the 4 code words are 2, so a 1-bit error occurring in any code word can be detected.

(2) Repetition code

The repetition code consists of n times of repetitions of 1-bit information parts, and the number of code words is 2. For instance, a 3-bit code has two repetition codes as follows:

(0) → (000)

(1) → (111)

The minimum hamming distance between these codes is 2, so a 1-bit error occurring in a code word can be corrected.

(3) (7, 4) hamming code

The (7, 4) hamming code consists of a 4-bit information part (i_3, i_2, i_1, i_0) and a 3-bit parity check part (P_2, P_1, P_0) which is determined according to the following rule.

$$\left.\begin{aligned} P_0 &= i_3 + i_2 + i_0 \\ P_1 &= i_2 + i_1 + i_0 \\ P_2 &= i_3 + i_2 + i_1 \end{aligned}\right\} \quad \text{.... (8.3.1)}$$

In expressions (8.3.1), operators "*" represent exclusive OR, so 0 + 0 = 0, 0 + 1 = 1, 1 + 0 = 1, and 1 + 1 = 0.

The (7, 4) hamming code has 4 information bits, or $2^4 = 16$ code words. Table 8-3-4 shows all of the code words.

Information Part				Parity Check Part		
i_3	i_2	i_1	i_0	P_2	P_1	P_0
0	0	0	0	0	0	0
1	0	0	0	1	0	1
0	1	0	0	1	1	1
1	1	0	0	0	1	0
0	0	1	0	1	1	0
1	0	1	0	0	1	1
0	1	1	0	0	0	1
1	1	1	0	1	0	0
0	0	0	1	0	1	1
1	0	0	1	1	1	0
0	1	0	1	1	0	0
1	1	0	1	0	0	1
0	0	1	1	1	0	1
1	0	1	1	0	0	0
0	1	1	1	0	1	0
1	1	1	1	1	1	1

Table 8-3-4 List of Code Words of (7, 4) Hamming Code

This table shows that the minimum hamming distance of the code is 3 and that a 1-bit error can be corrected.

(4) Basic knowledge on algebra

The examples of error correction codes used in the description of the previous section are beginner-type codes, and their error detection and correction capabilities are insufficient for application in the DV.

The error correction codes with practical error detection and correction capabilities for use with the DV are constructed based on abstract algebra. In the following, the minimum required knowledge on the algebra for understanding the error correction will be described. If you want to gain more knowledge, please also refer to books on mathematics.

(a) Galois field

Here, the term "field" refers to the set of elements with which the four arithmetical operations of addition, subtraction, multiplication and division can be defined.

The term "field" is used because its functions are working organically, and have come from German word "Körper". For example, a real number or complex number is a field. However, when the term "field" is used with error correction codes, it does not mean a field with an infinite number of elements such as a real number, but means a finite field composed of a finite number of elements.

The "element" is what belongs to a set.

For example, if there is "a" which belongs to set "M", it is said, "a is an element of M". The fact that "a" belongs to "M" is expressed using a symbol as "$a \in M2$". "$\in$" is the symbol of the initial letter of "element". If "a" does not belong to "M", it is expressed as "$a \notin M$".

A finite field is also called the Galois field, after the French mathematician Evariste Galois (Oct. 25, 1811 - May 31, 1832) who created one of the basic algebra theories. A Galois field composed of P elements is expressed as GF(P).

The simplest Galois field is a GF(2) composed of elements (0, 1). The addition in GF(2) is defined as exclusive OR and the multiplication can be defined as multiplication of ordinary integers.

Table 8-3-5 shows the operation tables of GF(2).

	0	1
0	0	1
1	1	0

(a) Addition

	0	1
0	0	0
1	0	1

(b) Multiplication

Table 8-3-5 Operation Tables of GF(2)

(b) Extension field

The complex number field is created by adding root "i" of "$x^2 + 1 = 0$", the polynomial which cannot be factorized any more in a real number field (irreducible polynomial) to a real number field. In the same way, by adding a root of an irreducible polynomial in Galois field GF(P) to GF(P), it is possible to create a field GF(P^m) where the number of elements is equal to P^m which is a P's power. This operation is referred to as a field extension. GF(P) is called the ground field and GF(P^m) is called the extension field.

For example, assume that there is an irreducible cubic polynomial as follows:

$$x^3 + x + 1 = 0,$$

If there is an extension field GF (2^3) created by a root of the above polynomial "α" to GF (2), "0", "1" and "α" are the elements of extension field GF (2^3). Then, since multiplication should be definable in a field, all of α's powers become the elements of GF (2^3). As for the α's powers, since "α" is the root of polynomial $x^3 + x + 1 = 0$,

$$\alpha^3 = \alpha + 1$$

Therefore, this relationship means the following:

$$\alpha^0 = 1$$
$$\alpha^1 = \alpha$$
$$\alpha^2 = \alpha^2$$
$$\alpha^3 = \alpha + 1$$
$$\alpha^4 = (\alpha + 1)\,\alpha = \alpha^2 + \alpha$$
$$\alpha^5 = (\alpha^2 + \alpha)\,\alpha = \alpha^2 + \alpha 1 + 1$$
$$\alpha^6 = (\alpha^2 + \alpha + 1)\,\alpha = \alpha^2 + 1$$
$$\alpha^7 = (\alpha^2 + 1)\,\alpha = 1$$
$$\vdots$$

(Repeated)

α's power after α^7 are repetitions of the above.

Fig. 8-3-15 shows this relationship from a different viewpoint. In this figure, since the cycle is closed, α's power after α^7 are replaced by values of α^6 or below.

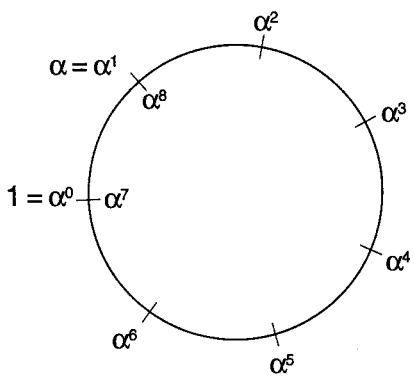

Fig. 8-3-15 Cycle of GF (2^3)

(5) Cyclic code

The cyclic codes are important codes that can be coded or decoded easily.

The cyclic code has the following properties:

- The sum of arbitrary code words is a code word.
- The series obtained by cyclic shifting of code words becomes a code word.

(6) Hamming code

When one of the roots of an irreducible m-order polynomial in GF(2) is assumed to be α, the maximum period until α's power returns to the original number is $2^m - 1$ (see Fig. 8-3-15).

An irreducible polynomial which has a root α with which the period is $2^m - 1$ is called the primitive polynomial, and α in this polynomial is called a primitive element.

GF(2^m) is an extension field created by adding a primitive element with a period of $2^m - 1$ to GF(2). The hamming code is a cyclic code which uses a primitive polynomial as the generation polynomial, and its parameters are as shown below.

Code length : $n = 2^m - 1$
Information amount : $k = n - m$
Min. hamming distance : $d_{MIN} = 3$

A hamming code with code length of n and information amount of k is called a (n, k) hamming code. Since the minimum hamming distance is 2, any 1-bit error occurring in the code word can be corrected.

(7) BCH code

The BCH (Bose-Chauduri-Hocgenghem) code extends the error correction of a Hamming code to 2 bits or more. The BCH codes with t-bit correction become the cyclic codes of code table n with which generation polynomial G(x) is a minimum-order polynomial having α, α^2,... α^{2t} as the roots, assuming that α is a primitive root of GF(2^m) and that $n = 2^m - 1$.

(8) Reed-Solomon code

The BCH code described in above (7) is defined on GF(2). The Reed-Solomon code is an extension of the above to GF(2^m). Its error detection and correction are applied per symbol, which is an element of the extension field.

In general, a Reed-Solomon code with code length of n and information amount of k is called the (n, k) RS code.

(9) Reed-Solomon product code

Assuming that C_1 is (n_1, k_1) codes and C_2 is (n_2, k_2) codes, the product code of them can be obtained by coding k_1 columns, each composed of k_2 symbols, with C_2, then coding k_2 rows, each composed of k_1 symbols with C_1. Fig. 8-3-16 shows the construction of product code.

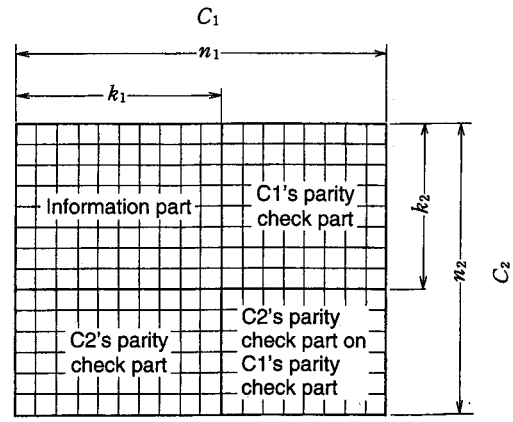

Fig. 8-3-16 Construction of Product Codes

The C2's parity check part on C1's parity check part is identical to the C1's parity check part on C2's parity check part. As a result, the same product code can be obtained by coding C1 before coding C2. The DV uses the Reed-Solomon product code obtained by a double coding of the Reed-Solomon code.

8.3.9 Data Structure

Random errors and burst errors due to dropouts on tape occur with the magnetic recording/playback circuitry of the DV. To deal with this, the DV records data by turning into sync blocks. Fig. 8-3-17 shows the DV data structure.

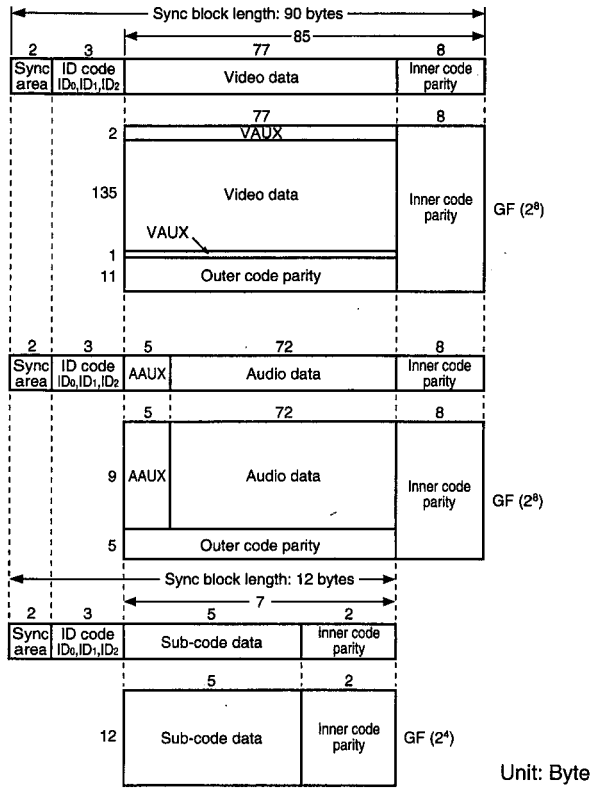

Fig. 8-3-17 Data Structure

The video and audio uses the same sync block configuration to reduce the scale of hardware. The video or audio data forms a sync block together with the sync area, the ID code indicating the data attributes and the inner code parity.

The byte counts of the sync area and ID code in Fig. 8-3-17 are the values before the 24/25 conversion (by a converter circuit which produces digitally the pilot signal for use in tracking during playback). In practice, however, they are 24/25-converted and become scrambled interleaved NRZI-converted signals before being recorded onto tape. The following 17-bit patterns have been defined as sync patterns.

- Audio/Video sectors

  Sync-D : 00011111111110001
  Sync-E : 11100000000001110
  MSB LSB

- Sub-code sector

  Sync-F : 00000111111111101
  Sync-G : 11111000000000010
  MSB LSB

The ID code is composed of 3 bytes including two ID bytes and a parity byte.
The ID bytes of a video or audio sector are:
4 bits of sequence number for indicating the continuity of frame, 4 bits of track pair number indicating the track number, and 8 bits of sync block number indicating the arrangement of sync blocks in each track.

(1) Error correction in the ID code area

In the ID code area, (12, 8, 3) BCH codes are used for common error correction to the audio, video and sub-code sectors.
The configuration is as shown below.

Primitive polynomial: $x4 + x + 1$

ID_0:	C_{15}	C_{14}	C_{13}	C_{12}	C_{11}	C_{10}	C_9	C_8
ID_1:	C_7	C_6	C_5	C_4	C_3	C_2	C_1	C_0
ID_P:	P_7	P_6	P_5	P_4	P_3	P_2	P_1	P_0
	MSB							LSB

ID-CW_0: C_{14} C_{12} C_{10} C_8 C_6 C_4 C_2 C_0 P_6 P_4 P_2 P_0
ID-CW_1: C_{15} C_{13} C_{11} C_9 C_7 C_5 C_3 C_1 P_7 P_5 P_3 P_1

The parity can be expressed as follows.

$P_7 = C_{15} + C_{11} + C_7 + C_5$
$P_5 = C_{15} + C_{13} + C_9 + C_5 + C_3$
$P_3 = C_{15} + C_{13} + C_{11} + C_7 + C_3 + C_1$
$P_1 = + C_{13} + C_9 + C_7 + C_1$
$P_6 = C_{14} + C_{10} + C_6 + C_4$
$P_4 = C_{14} + C_{12} + C_8 + C_4 + C_2$
$P_2 = C_{14} + C_{12} + C_{10} + C_6 + C_2 + C_0$
$P_0 = + C_{12} + C_8 + C_6 + C_0$

As the contents of ID code have regularity (inertia) between successive sync blocks, it is also possible to apply only the error detection.

(2) Error correction in the video and audio areas

The video data and audio data are composed of Reed-Solomon product codes of GF (2^8) as shown in Fig. 8-3-17. With internal codes, a common code length is used to reduce the burden on the hardware.

(a) Inner codes: same video and audio (85, 77)

α : Primitive element
Primitive polynomial : $x^8 + x^4 + x^3 + x^2 + 1$
Generation polynomial : $g = (x + 1)(x + \alpha)(x + \alpha^2)...(x + \alpha^7)$
As 8 bytes of parity are added, up to 4 errors can be corrected.

(b) Outer codes: Video (149, 138), audio (14, 9)

Primitive polynomial: $x^8 + x^4 + x^3 + x^2 + 1$
Generation polynomials:
Video $g = (x + 1)(x + \alpha)(x + \alpha^2)...(x + \alpha^{10})$
Audio $g = (x + 1)(x + \alpha)(x + \alpha^2)(x + \alpha^3)(x + \alpha^4)$
As 11 parity bytes are added to the video data, the maximum burst error correction length assuming that all random errors are corrected by inner code is 85 x 11 = 935 bytes, which corresponds to correction of error due to a defect of about 0.3 mm in the widthwise direction of tape.
Similarly, 5 parity bytes are added to the audio data so the maximum burst error correction is 85 x 5 = 425 bytes, which corresponds to correction of error due to a defect to about 0.14 mm in the widthwise direction of tape.

(3) Error correction in the sub-code area

Errors in the sub-code area in each track are corrected by using only the inner codes without using the produce codes. Multiple write in a frame is adopted to improve the reliability.

Sub-code (14,0) GF(2^4) Reed-Solomon code

Primitive polynomial : $x^4 + x + 1$

Generation polynomial : $g = (x + 1)(x + \alpha)(x + \alpha^2)(x + \alpha^3)$

8.3.10 DCI

Channel coding of recording signals is to convert the digital information signals composed of "1" and "0" according to the properties of the magnetic recording/playback circuitry. As the DV transports tape by means of helical scanning of a rotary drum, the signal processing of the recording/playback circuitry is subject to the following restrictions.

(1) The signal-to-noise ratio (S/N) in playback should be good.
If the S/N is poor, a large number of random errors make error correction difficult.

(2) The DC and low-frequency components should be small.
The magnetic recording system has a differential wave type transfer characteristic and a rotary transformer is used in signal exchange between the magnetic heads and recording/playback circuitry. Therefore, the DC and low-frequency components (where signal "1" or "0" continues) cannot be recorded or reproduced.

(3) The timing clock should be reproduced.
If a stable reproduce clock which is synchronized with the reproduce signal by shortening successive "1" or "0" of data, jitter may occur.

To deal with the above restrictions, the DV uses the scrambled interleaved NRZI technique. This technique is called scrambled interleaved because the bit series of every other bit are identical to the NRZI system and that two NRZI series are alternating. It is also called PR4 (Partial Response class IV) or PR(1, 0, -1).

(A) Interleaved NRZI

The interleaved NRZI system has a close frequency characteristic to the characteristic of magnetic recording circuitry and the technique is used with many digital VCRs.

When there is an isolate pulse, inter-code interference producing -1 occurs in 2 bits after it. This technique shapes the reproduced waveform by utilizing the inter-code interference. Fig. 8-3-18 shows the process in which the input data series is reproduced by PR4 through tape transport. When a data series is input to point A it is converted by the Precoder after signal processing. The data and frequency spectrum are as shown by B in the figure after conversion. The data is then turned into a differential waveform according to the differentiation property of the magnetic recording/playback circuitry, and the loss in the high-frequency band is compensated by the equalizer to become waveform C. Then, a signal delayed by 1 clock and the original signal are mixed to become waveform D. By applying 3-value detection to convert data "-1" into "1", output data E which is identical to the input data can be obtained.

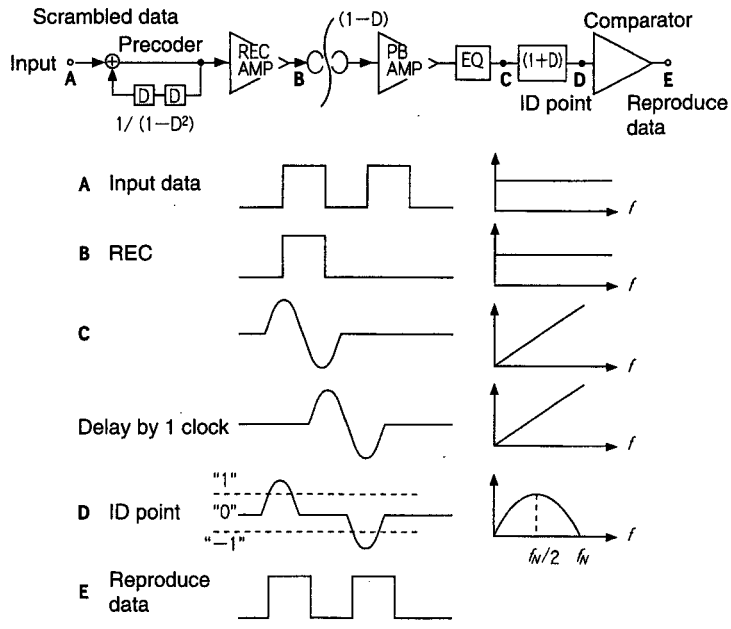

Fig. 8-3-18 Si-NRZI

This signal flow can be expressed using delay parameter D as follows.

Precoder : $1/(1 - D^2)$

Reproduce circuitry : 1 - D (Differentiation property)

Decoder : 1 + D

Transfer function : $(1/(1 - D^2) \cdot (1 - D^2) = 1$

The above shows that the input data and output data are identical also in expressions.

(B) 24/25 conversion

To gain advantage of the compatible playback with track linearity, the DV employs 24/25 conversion which turns the entire track into pilot signals.

The 24/25 conversion generates the low-frequency pilot component by inserting an extra bit (1 bit) to every 24 bits (3 bytes) of scrambled data series. The run length is set to no more than 9 and the extra bit is added to the recorded data series as if supplementing the spectra shown in Fig. 8-3-19. When the recording rate is 41.85 MHz, f1 is 465 kHz and f2 is 697.5 kHz. The spectra shown in Fig. 8-3-19 are recorded respectively in tracks F0, F1 and F2 shown in Figs. 8-1-3 and 8-1-4. When the play heads scan track F0 during playback, pilot components f1 and f2 can be obtained as crosstalk signals from the adjacent tracks so that stable tracking is possible.

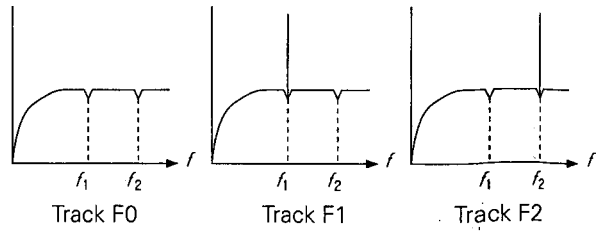

Fig. 8-3-19 Recording Signal Spectra

8.4 VIDEO/AUDIO SIGNAL PROCESSING IN PLAYBACK CIRCUITRY

For the playback signal processing in the initial stage at the head amp, equalizer and (1+D), see 8.3.10, "DCI".

8.4.1 Viterbi Decoding

This section describes the concept of Viterbi decoding.
Viterbi decoding is applicable only to the NRZI series signals. The decoding process of DV divides an interleaved NRZI series into two NRZI series and applies Viterbi decoding separately to each of them, then merges them later on to the original data series. Fig. 8-4-1 shows the concept of the basic principles of Viterbi decoding of NRZI series.

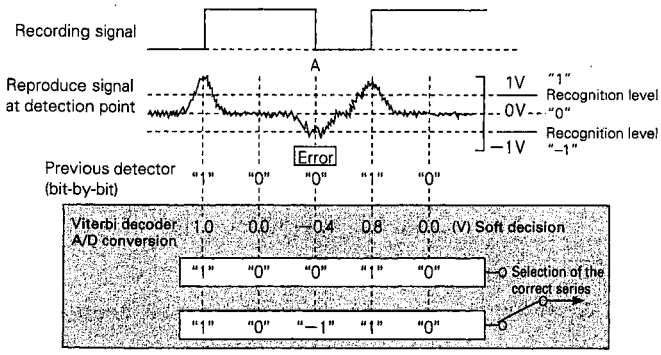

Fig. 8-4-1 Viterbi Decoding

The differential waveform obtained by playing a NRZI-recorded tape is defined as the ID point for Viterbi decoding (point D in Fig. 8-3-18). The signal shown in Fig. 8-4-1 contains random noise. Previous processes (GR-DV1, etc.) without Viterbi decoding have been applying 3-value detection to this signal. In this case, errors may occur by judging the level at point A in Fig. 8-4-1 as "0" while it should be "-1". This technique is referred to as hard decision because it uses fixed identification levels.

On the other hand, Viterbi decoding uses a soft decision method. It first A/D converts the reproduce signal and reads the waveform level. For instance, if "1" is read as +1 V, "0" is read as 0 V, "-1" is read as -1 V and the level is -0.4, this leads to the judgment that the probability of being 0 is higher than that of being -1. Therefore, the bit series may be either 10010 or 10-110.
A decision criterion that "this is the recording/playback of NRZI series" is thus invoked. The differentiation waveform at the ID point of the reproduce waveform of NRZI series has the following rule.
The rule is that, when there are two positive-going waveforms, there is always a negative-going waveform between them. In other words, there is always "-1" between two "1" in the decoded value. This rule means that bit series 10010 above cannot exist, and bit series10-110 is selected.
As described above, the Viterbi decoding corrects errors by utilizing the rule between bits (redundancy of the NRZI series).

8.4.2 Error Correction

The DV corrects errors by decoding the data that has been coded using Reed-Solomon product codes. The minimum hamming distance of the product codes is d_1 and d_2 if the minimum hamming distances of C_1 and C_2 are d_1 and d_2, thus up to $(d_1d_2 - 1)/2$ errors can be corrected from the principles. Nevertheless, in fact, the maximum number of correctable errors is variable depending on the decoding technique. One of the decoding techniques is the series decoding technique that decodes C_1 first then decodes C_2. Although this is not the best way from the viewpoint of error correction capability, the serial connection of two decoders C_1 and C_2 makes it easy to build the hardware so it is used by many digital VCRs.
With a digital VCR, compound errors in which random errors and burst errors are mixed are produced (see Fig. 8-4-2).
Fig. 8-4-2 shows the correction of compound errors by product codes.

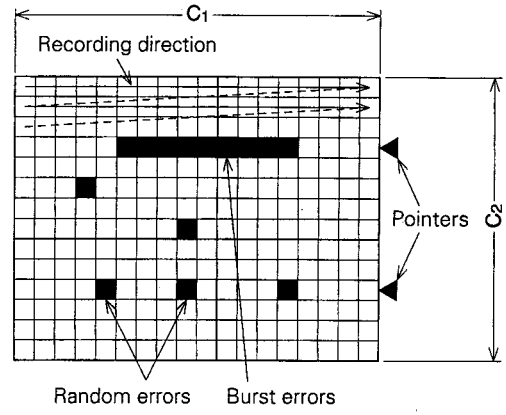

Fig. 8-4-2 Principles of Erasure Correction

Assume that the signal has been recorded in the direction of the arrow.
Decoding is applied in the common order, i.e. C_1 first, then C_2.
With the C_1 decoding, pointers indicating random or burst errors beyond the correction capability are placed to all of the symbols of the code word containing the errors at the same time as random error correction. The symbols to which a pointer is attached are referred to as erasure symbols.
This decoding technique utilizing pointers is called the erasure correction, which features an improved error correction capability compared to the decoding techniques without pointers. In cases when a code error is ignored during C_1 decoding, a different code from the recorded code may be output by the C_2 decoding. This erroneous correction is one of the most important causes of video and audio quality deterioration. To prevent erroneous correction, the C_1 decoding prevents error detection mistakes by limiting the number of error corrections. Although the DV is capable of error correction of 2 symbols, the actual number of symbols subjected to error correction is limited to 1 by the RS code in GF(2^8). This error correction limitation allows the error detection mistake probability to about $1/2^{16}$ of 2-symbol error correction. The error correction technique used in the C_2 decoding is variable depending on the number of erasure symbols.

(1) When the number of erasure symbols is 1 or less:
In this case, the use of a pointer cannot improve the error correction capability because only one error can be corrected. Therefore, the same 1-error correction and 2-error detection as the C1 decoding are used without using a pointer. An error that cannot be corrected by this technique is subject to error concealment, which will be described in section 8.4.3.

(2) When the number of erasure symbols is 2 or more:
Error detection is performed and, if errors are found in the locations with erasure symbols, error correction is also applied.
If errors are found in other locations than those with erasure symbols, the data is subjected to error concealment.

(3) When the number of erasure symbols is 3 or more:
In this case, error correction making a full use of the error correction capability is possible. However, as there is no error detection capability, error detection mistakes during C1 decoding will result in erroneous corrections.
To prevent this, verification is applied to see if each erasure symbol is right or wrong, and error correction is applied only when the number of right erasure symbols is no more than 2.
This erasure correction technique is referred to as a 2 out of 3, erasure correction.
When it is identified that code errors are found with all of the 3 errors, error concealment is applied by judging that code errors beyond the error correction capability have occurred.

(4) When the number of erasure symbols is 4 or more:
In this case, the erasure correction capability is exceeded so that error concealment is applied to prevent erroneous correction.

8.4.3 Error Concealment

Error concealment is a radically different technology from error correction.
Error correction technology restores errors to their original states by utilizing the relationship between the information part and the parity check part. However, error concealment makes errors less noticeable by complementing errors with the surrounding pixels. This means that error concealment can be applied only when there is a data correlation. The DV can employ error concealment because the video and audio signals are correlated between each other. The error concealment is particularly effective when there is a major scratch on the tape or when the reproduce error rate in slow, still or high-speed playback is too high to be handled by the error correction technology.
Error concealment is available by using more than one technique. For easy understanding, the techniques can be regarded as similar to the blemish compensation of still cameras or the dropout compensation (DOC) of VHS video.
Specifically, each data item containing an error is replaced with the data of 1 frame before using a frame memory.

8.4.4 De-shuffling (Audio)

The audio data, which has been shuffled before error correction, is de-shuffled and output as the audio signal.

8.4.5 VLD

The video data that has been shuffled before error correction is processed by VLD (Variable Length Decoding). This consists of decoding the signal that has been coded with VLC as described before.

8.4.6 I-DCT

After VLD, the data is processed by I-DCT (Inverse Discrete Cosine Transform) to expand the compressed data.

8.4.7 De-shuffling (Video)

The expanded data is de-shuffled to restore the video signal.

8.5 CAPSTAN SERVO

The rotation speed of the capstan motor is controlled in two ways; by velocity control or by ATF tracking.

8.5.1 Velocity Control

The capstan motor rotation speed is controlled according to the CAP FG pulse in the same way as the VHS video.

8.5.2 ATF Tracking

The capstan motor rotation speed is controlled based on pulses f_0, f_1 and f_2 that have been added by the 24/25 conversion, so that the crosstalk components from f_1 and f_2 are identical when track f_0 is traced.

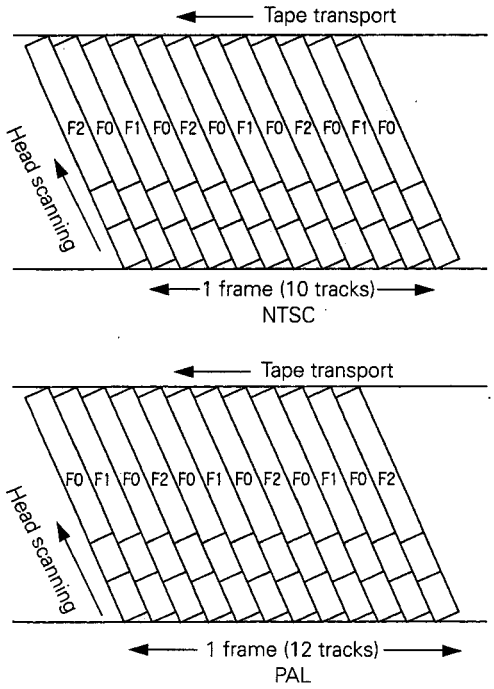

Fig. 8-5-1

Assume that the 3 frequencies are respectively f0 = 0 Hz, f1 = 465 kHz and f2 = 697.5 kHz.
CH1 always records f0, and CH2 records either f1 or f2. When the CH1 head traces the track during playback, the crosstalk components from the left and right tracks (tracks recorded for CH2) are always picked up because the head width is slightly wider than the track pitch. These crosstalk components are applied to the BPF for extracting the pilot signal frequency components, and the TREB waveform is generated by means of digital signal processing. (The point A in Fig. 8-5-2.)

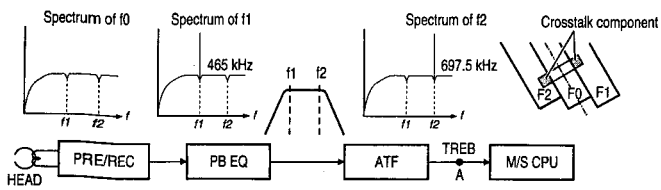

Fig. 8-5-2

The TREB waveform indicates the CH1 tracking condition (see Fig. 8-5-3).

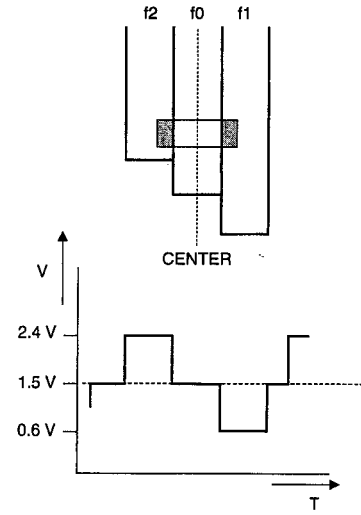

Fig. 8-5-3

Fig. 8-5-3 shows the TREB waveform when the CH1 head tracking is set to the center. Since the crosstalk components from the channels to the left and right are identical when the tracking is in the center, the levels of the pilot signals contained in them should also be identical. At this time, the DC voltage of TREB is 1.5 V.

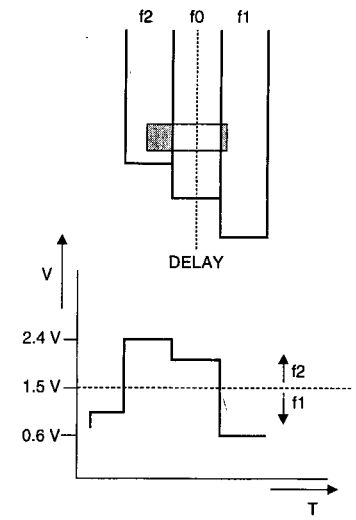

Fig. 8-5-4 TREB Waveform

Fig. 8-5-4 shows the TREB waveform when the CH1 head tracking is deviated toward the delay direction. As the crosstalk component from the track on the left (f2) is larger than that from the track on the right (f1) in this case, the pilot signal level of f2 is larger and the DC voltage of the TREB waveform tends to be located on the f2 side (higher than the center voltage). At this time, the upper limit of the variation range becomes 2.4 VDC (+ 0.9 V).

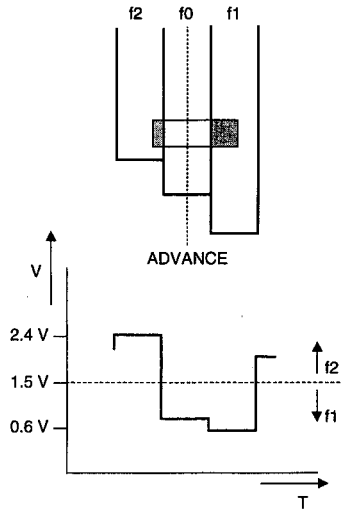

Fig. 8-5-5

Fig. 8-5-5 shows the TREB waveform when the CH1 head tracking is deviated toward the advance direction. As the crosstalk component from the track on the right (f2) is larger than that from the track on the left (f2) in this case, the pilot signal level of f2 is larger and the DC voltage of the TREB waveform tends to be located on the f1 side (lower than the center voltage). At this time, the lower limit of the variation range becomes 0.6 VDC (-0.9 V).

When a CH1 track is played, the tracking information is indicated by the DC voltage of TREB and is variable by ± 0.9 V according to the tracking error with respect to the 1.5 V DC which is the voltage in the center tracking condition. A change by 0.3 VDC corresponds to about 2μm. Also, when the CH2 head traces a track, pilot signal component f1 or f2 is maximized and the DC voltage of TREB becomes 2.4 V or 0.6 V.

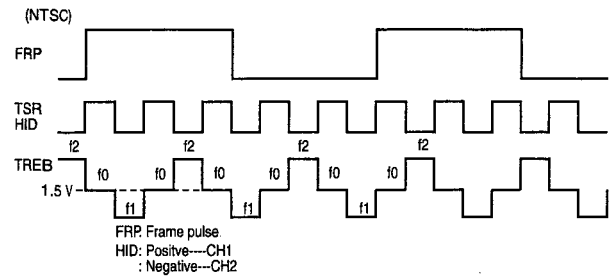

Fig. 8-5-6

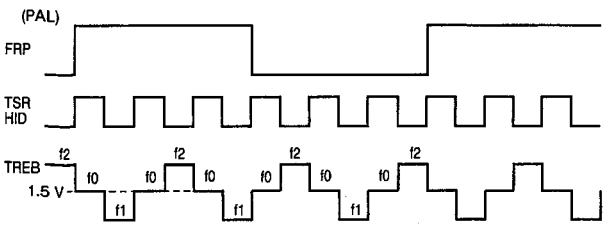

Fig. 8-5-7

Figs. 8-5-6 and 8-5-7 show the relationship between the FRP and HID waveforms and the TREB of NTSC and PAL respectively. With the NTSC signal, there are two kinds of order of pilot signals at the beginning of a frame; one is the order of f0 then f1, and the other is the order of f0 then f2. The former type of frame is called PF0 (pilot frame) and the latter type of frame is PF1. With the PAL signal, the pilot frame is always PF0 because it uses 12 tracks per frame. The position relationship between f1 and f2 in TREB is variable depending on the track number being played by the CH1 head. Therefore, the servo CPU should be aware of the currently played track number in the frame (see Figs. 8-5-8 and 8-5-9). The servo CPU identifies the track number by decoding 4 kinds of signals TRP0 to 2 and TSR output from the DCI (IC509) during playback. In actual operation, the track number of the previous track to the track being played (NTSC: 0 to 9, PAL: 0 to 11) is output at the edge of TSR.

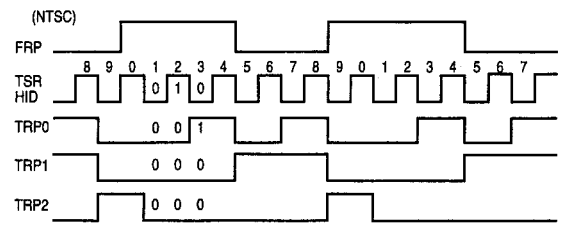

Fig. 8-5-8

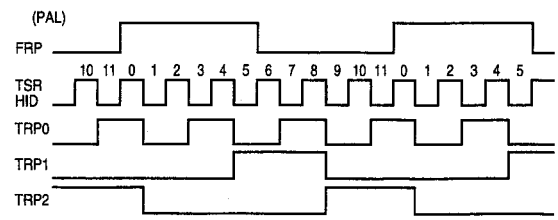

Fig. 8-5-9

8.6 DRUM SERVO

The rotation speed of the drum motor is controlled in two ways; the velocity control and the phase control.

8.6.1 Velocity Control

The drum motor rotation speed is controlled according to the Drum FG pulse in the same way as the VHS video.
The drum rotation speed should be:

NTSC : 149.85 [Hz]
PAL : 150 [Hz]

8.6.2 Phase Control

The phase control consists of the control of the start position of the track tracing by the head. This fine-adjusts the drum motor rotation speed according to the Drum PG pulse in the same way as the VHS video.
While the VHS generates the DFF pulse from the Drum PG pulse, the DV generates the HID (Head IDentity) pulse from the Drum PG pulse.

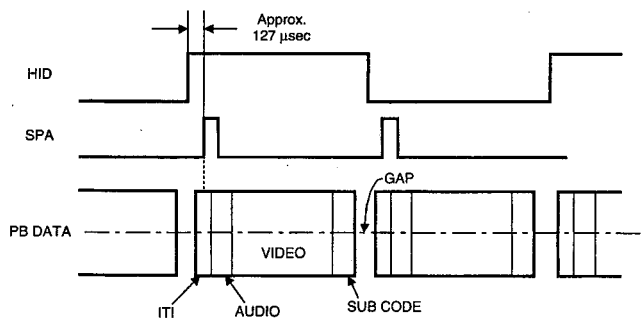

Fig. 8-6-1 PB Switching Point

The data recorded in a track includes ITI, Audio, Video, Sub-code, etc. When the DCI has detected 52 SBs (Sync Blocks) in the SSA (Start Sync Area) in ITI, it outputs the SPA signal to the servo CPU. The position of the SPA in a track is defined at about 127 µs from the edge of HID (which corresponds to the drum FF in previous video circuitry).
The PB switching point in the adjustment software adjusts the positioning automatically. Therefore, when adjusting the PB switching point, it is required to use an alignment tape in which track patterns are recorded precisely. If this adjustment is incorrect, the widths of the gaps before and after PB ENV may be variable, the sub-codes may not be reproduced correctly and the timecode may not function. The drum phase servo functions to align the drum PG rotation phase with the TSR produced by DCI. TSR has the same period (150 Hz) as HID but the timing is slightly different.

Table 8-6-1 shows the list of servo control signals.

		Speed Control	Phase Control	
			Reference signal.	Compare signal
DRUM		DRUM FG (900 Hz)	TSR	DRUM PG (150 Hz)
CAPSTAN	REC	CAPSTAN FG	—	
	PB	(897 Hz)	1.5 VDC	TREB

Table 8-6-1 Servo Control Signal List

SECTION 9
CIRCUIT DESCRIPTION

9.1 CAMERA HEAD CIRCUITRY

9.1.1 Outline

The camera head with three 1/2-inch, 380,000-pixel CCDs and a signal processor block incorporating the same DSP (Digital Signal Processor) IC as that developed for the DY-90 transfers the signal captured with the camera to the mini-DV recorder block without spoiling the high video quality.
Most of the setting and adjustment items employ the EVR (Electric VR) system using menus to simplify the circuit design and improve the stability and reliability of adjustments.

9.1.2 IS and TG Boards

The CCDs are 1/2-inch, 380,000-pixel, IT type CCDs manufactured by Sony. These CCDs feature freedom from the Vsub adjustments, which used to be necessary with previous CCDs. This design also freed the CCDs from troubles such as insufficiency in dynamic level or lack of color due to adjustment errors after a CCD block assembly replacement.

(1) IS board
Each of the IS boards carry the CCD (IC501) and sample-and-hold IC (IC503). The IS board of this unit does not carry the VCA (Voltage Control Amplifier) which is mounted with the DY-90.
With this unit, the VCA is located in the video signal processor block on the CAM1 board.

(2) TG board
The vertical drive pulse is obtained from the V Driver of MN3112SA (ICs 2, 3, 4) based on the drive signals generated by the TG (Timing Generator) IC1. The horizontal drive pulse is obtained from 74VHC08 (ICs 6, 7).
The TG IC itself is compatible with both NTSC and PAL, and detects the signal format by the processing of pin 14. The IC operates for NTSC when pin 14 is Open and for PAL when pin 14 is pulled up by R1.
The R/G/B video signals from the IS boards are input through CN11 (19), CN12 (19) and CN13 (19). These signals are not processed in this board but output at pins 2 to 6 of CN4 to the CAM1 board.

9.1.3 CAM1 Board

The CAM1 board includes the analog signal processor circuitry and microcomputer circuitry.
The ROM (IC901) mounting the microcomputer software is not located on the CAM1 board but on a sub-board called the ROM board, which is connected to CN24. The DIP switch (S901) used in settings is also located on the ROM board.
The circuit diagram of this board is separated into two sections. The diagram on page 1/2 (in Fig. 9-1-2) shows the microcomputer circuitry and that on page 2/2 (in Fig. 9-1-3) shows the signal processor circuitry.

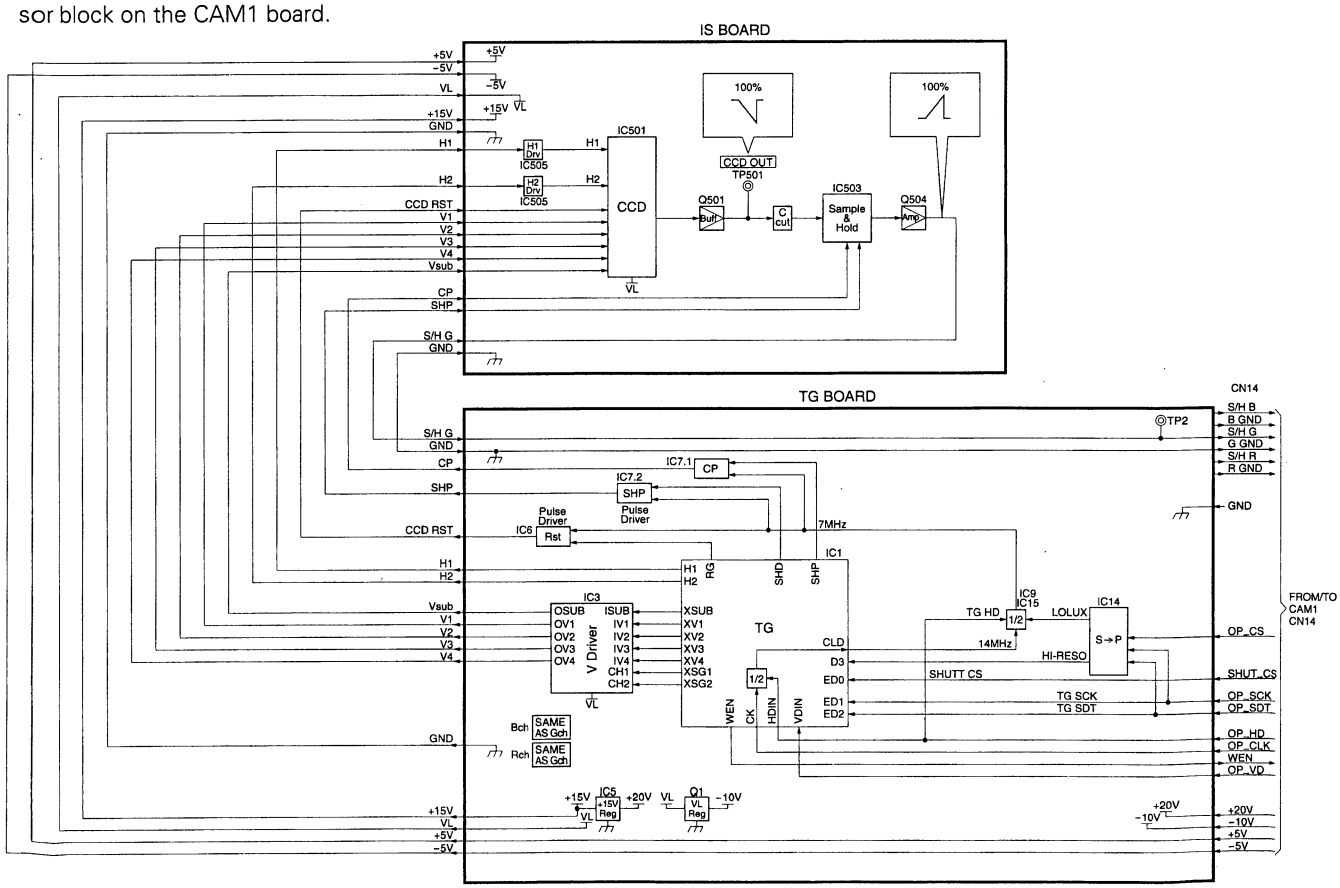

Fig. 9-1-1

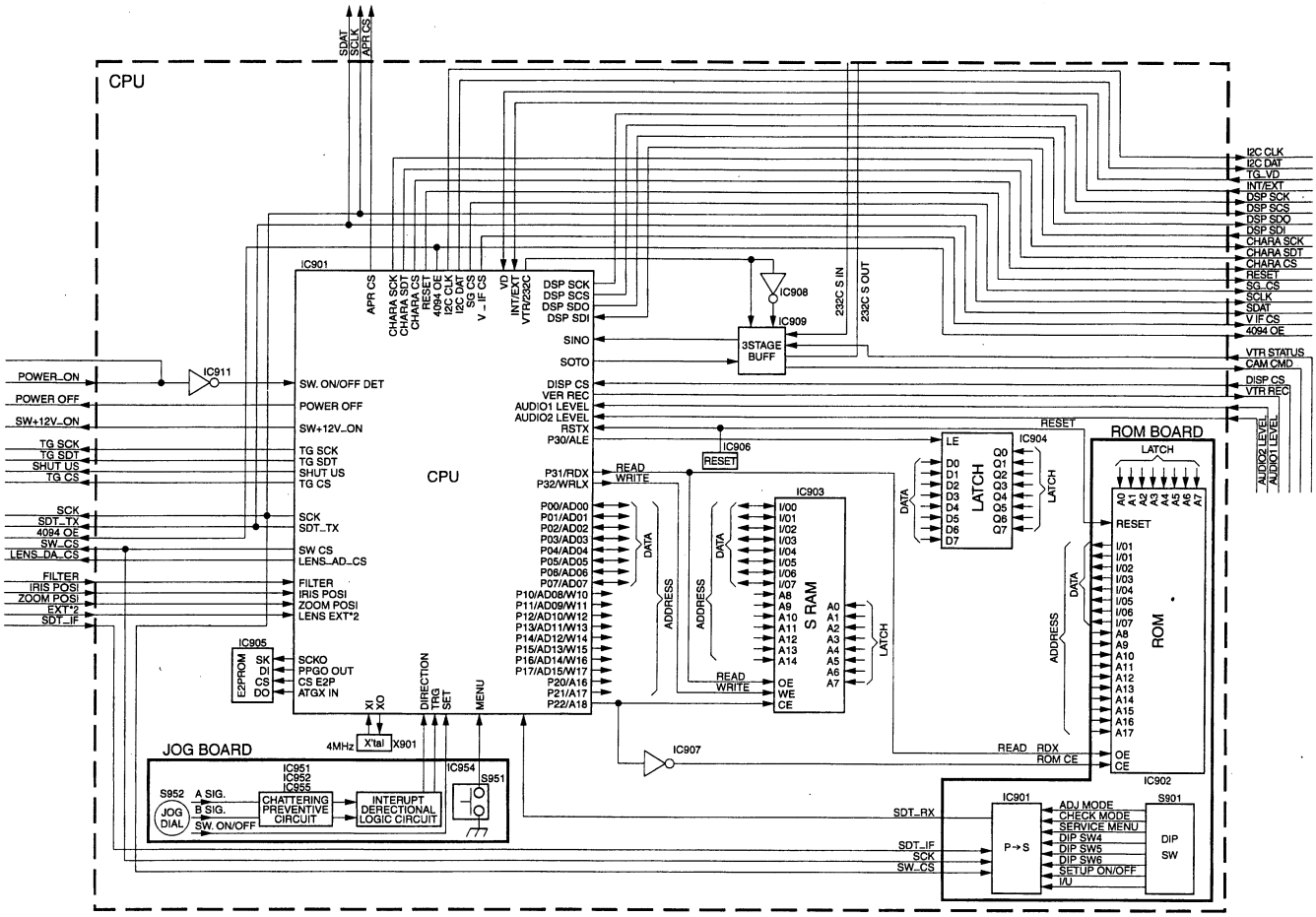

Fig. 9-1-2

The microcomputer circuitry shown on page 1/2 (in Fig. 9-1-2) is more simplified than previous circuits. Inputs from most switches are directly input to the CPU ports, making it unnecessary to use an IC for parallel to serial conversion of inputs. The character generator IC and associated circuitry are mounted on the CAM2 board.

About 1/3 of the circuit diagram on page 2/2 (in Fig. 9-1-3) is occupied by the EVR circuitry, which combines the IC526 (MB88345) outputs into three control signals and sends them to their respective control circuitry.

The other part of the diagram is occupied by the signal processor circuitry, which receives the control signals from the EVR circuitry and performs basic processing of the video signals. Two analog switches (ICs 511, 514) in the middle are provided for use in switching the LOLUX filtered signals.

Analog switch IC516 is used for blanking processing (0 V).

TPs 403, 503 and 603 on this board are the points to check the properly controlled white balance of the R/G/B signals.

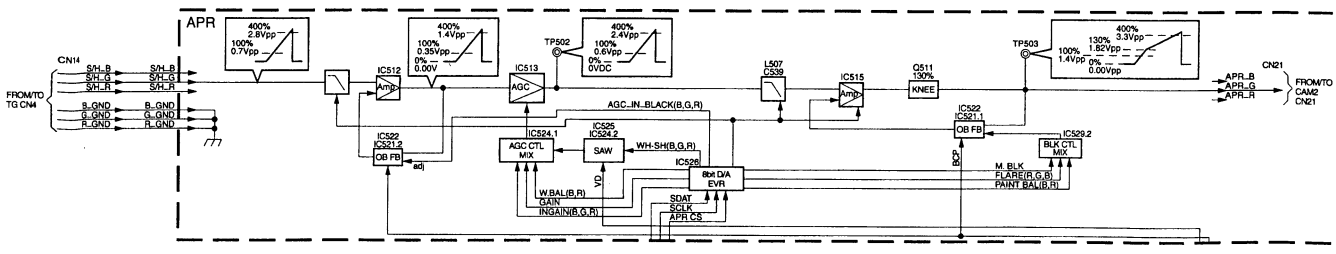

Fig. 9-1-3

9.1.4 CAM2 Board

The circuit diagram of this board is separated into three sections.

(1) The diagram on page 1/3 shows the major input/output connectors of the board.
CN21 is connected to the CAM1 board, and its pins 6, 8 and 10 input analog R/G/B signals. These signals are subjected to digital signal processing by the circuitry shown on page 2/3.
60-pin connectors CN1 and CN2 are board-to-board connectors for connection with the DV MAIN board.
The amplifier circuitry for the microphone installed on the camera head is shown in the center of the diagram.
This circuitry includes the amp which amplifies the -60 dB balanced input to -20 dB and the circuit supplying the phantom power (+48 V) (ON/OFF switchable).

(2) The diagram on page 2/3 shows the DSP (Digital Signal Processor) IC for major processing operations of camera signals and the associated circuitry.
The R/G/B signals are input in analog, converted into digital by the 10-bit A/D converter ICs (IC481, 581, 681) then input to the camera DSP (IC801).
The DSP's signal level comparator for black lock compares the value of the signal input to the DSP to see if they are more or less than 32 (dec). The results are returned as the black locking feedback signals (FBR, FBG, FBB). These signals are then integrated by IC623.1/2 and IC423.2, and the result is mixed with the A/D input signal for use in the black position adjustment.
The Y and U/V signals output from the DSP are supplied to the D/A converter IC (IC811) for conversion into the analog luminance (Y) and chrominance (C) signals, which are used in TEST OUT, VIDEO OUT, etc. At the same time, these signals are also output as the signals to the DV MAIN board.

(3) The diagram on page 3/3 corresponds to the SSG circuitry. It outputs sync signals from SSG IC IC102 (XC95144X10T).

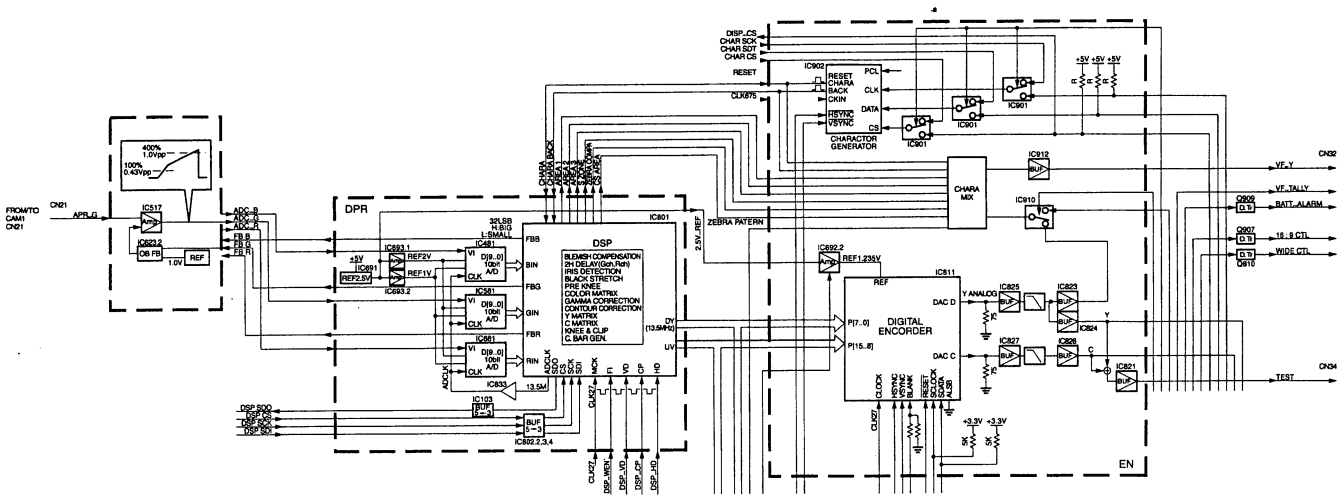

Fig. 9-1-4

9.2 DV CIRCUIT

The DV MAIN board performs all video and audio processing operations of the DV format. The video from the camera is input to the DVIO IC (IC602) which acts as an interface between the camera head and recorder. With the DVIO used with the BR-DV600, the analog input signals are input directly, and then input to the CAS IC (IC301). As the name of CAS (Compression, Audio, Shuffle) implies, the CAS IC performs compression of DCT/VLC, input of audio signal into the sync block and the shuffling of video signal with a single IC. The output signal is then input to the EDA IC (IC303). EDA stands for ECC (Error Correction Code), DCI (Digital Channel Interface) and ATF (Auto Tracking Function), and the IC incorporates these three functions in a single IC. After the parity addition using the ECC and conversion into recording signal have completed in this IC, the recording signal output from the EDA IC is input to the P/R & MDA boards and fed to the recording heads through the recording amp. Only two heads are mounted on the drum and the DV uses neither a flying erase head nor full erase head. This is because of the overlapped recording capability of digital recording thanks to the use of very high recording frequency and the concentration of recording magnetic flux in the upper part of magnetic layer. Overwriting a signal results in complete erasure of the original signal on the videotape.

The DV MAIN board has two CPUs, the DV CPU and MSD CPU. The DV CPU functions as the master and the MSD CPU functions as the slave. The DV CPU controls the EVR, communicates with the service tool connector and is also connected with the System CPU on the VIDEO/SYSCON board through a JVC bus. The MSD CPU is a microcomputer controlling the mechanism controller, servo and Digital IF IC (IC801).

The Digital IF IC (IC801) is the interface IC for the DV terminal inputs/outputs. IC201 is the Audio ADC/DAC IC, which during recording converts the analog audio signals from the Audio/LCD board to a digital signal and supplies it to the CAS IC located behind IC801, and during playback converts the digital signals into analog signals and supplies them to the Audio/LCD board.

9.2.1 Input Camera Video Signals

The video signals from the camera are supplied to the recorder circuitry in the digital format. They are not converted to analog signals to avoid video quality deterioration. The signals output from the camera DSP take the 4:2:2 format video data (Y: 8 bits, R-Y/B-Y: 8 bits, 13.5 MHz) and output from CAM2 board IC801 through DY(1) to DY(8) for the Y signal and UV(1) to UV(8) for the C (Cr/Cb) signal. The R-Y/B-Y signals are output alternately in linear sequence. The CAM CLK, INV and INH signals are also output together with the video signals. Fig. 9-2-2 shows these signals. CAMCLK is not 13.5 MHz but counted down to 4.5 MHz before being output. The INH and INV signals use the H and V timing signals for indicating the start of the data signal (see Figs. 9-2-3 and 9-2-4). The Y/C video data signals are sent through buffer ICs 828 and 829 on the CAM2 board, input to the DV MAIN board where they are formatted into the DV format signals. They are also supplied to the D/A converter in IC811 and output as the Y and chroma signals, which are input to IC5 on the VIDEO/SYSCON board. IC5 also inputs the PB Y and PB C signals from the recorder and the switching between the camera output and recorder playback output is performed here.

9.2.2 Digital Video Signal Compression

The signals supplied from the camera head to the recorder consist only of the effective video signals without the blanking signal. It is an 8-bit signal sampled at 13.5 MHz, and has 720 horizontal pixels and 480 vertical lines (PAL: 576 lines). The data rate per second is as shown below.

NTSC : 720(H) x 480(V) x 2(Y&C) x 8(bits) x 30 (frames) ≒ 166 Mbps

PAL : 810(H) x 576(V) x 2(Y&C) x 8(bits) x 25(frames) ≒166 Mbps

In the DVIO IC, this signal is converted from 4:2:2 to 4:1:1 to reduce the data quantity to 124 Mbps. It is then compressed to 1/5 by the DCT/VLC in the CAS IC and the data quantity becomes about 25 Mbps. This compressed signal is the DV format signal of the DV standard. It can be interfaced with other components through the DV terminal (IEEE1394 compliant).

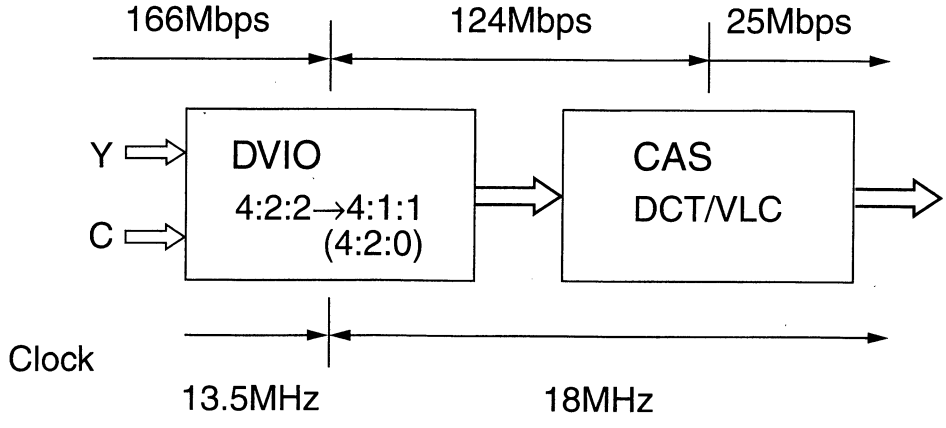

Fig. 9-2-1

Digital Video Data of DV

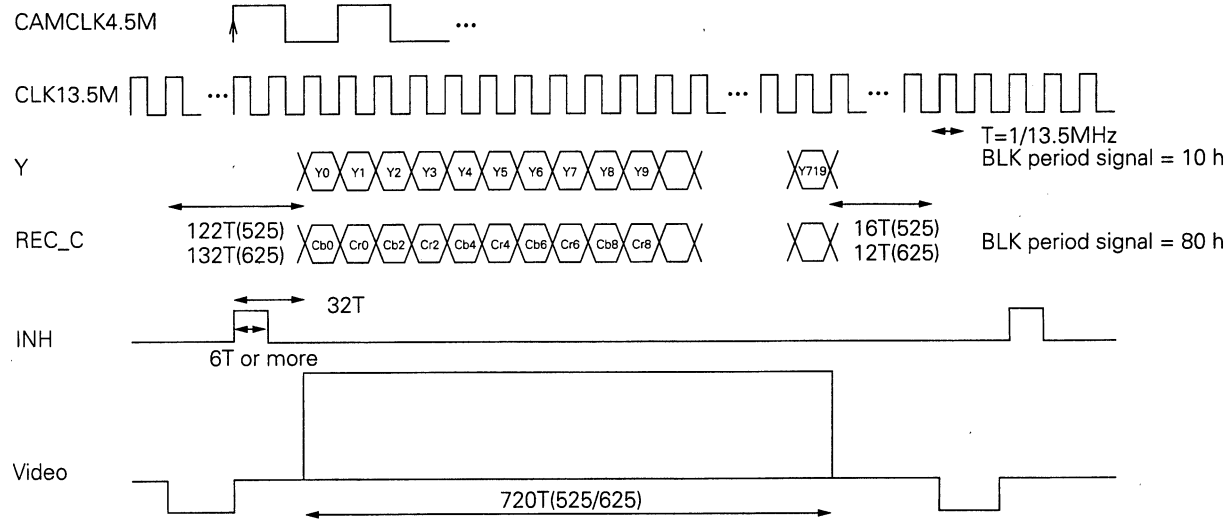

Fig. 9-2-2 Input Data

① NTSC (Effective lines: 23 ~ 262, 285 ~ 524)

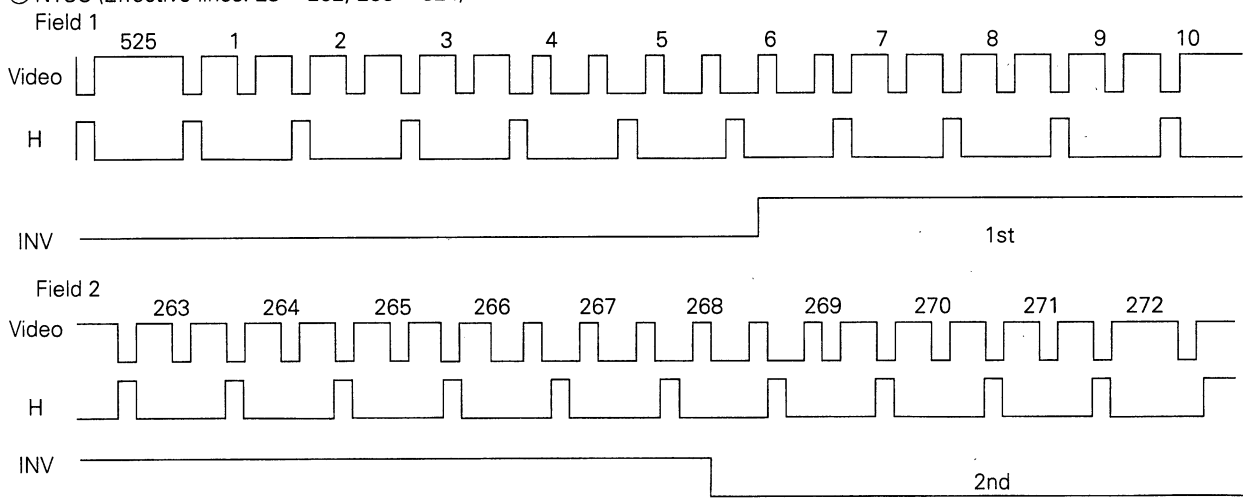

Fig. 9-2-3 H/V Timings (NTSC)

② PAL (Effective lines: 23 ~ 310, 335 ~ 622)

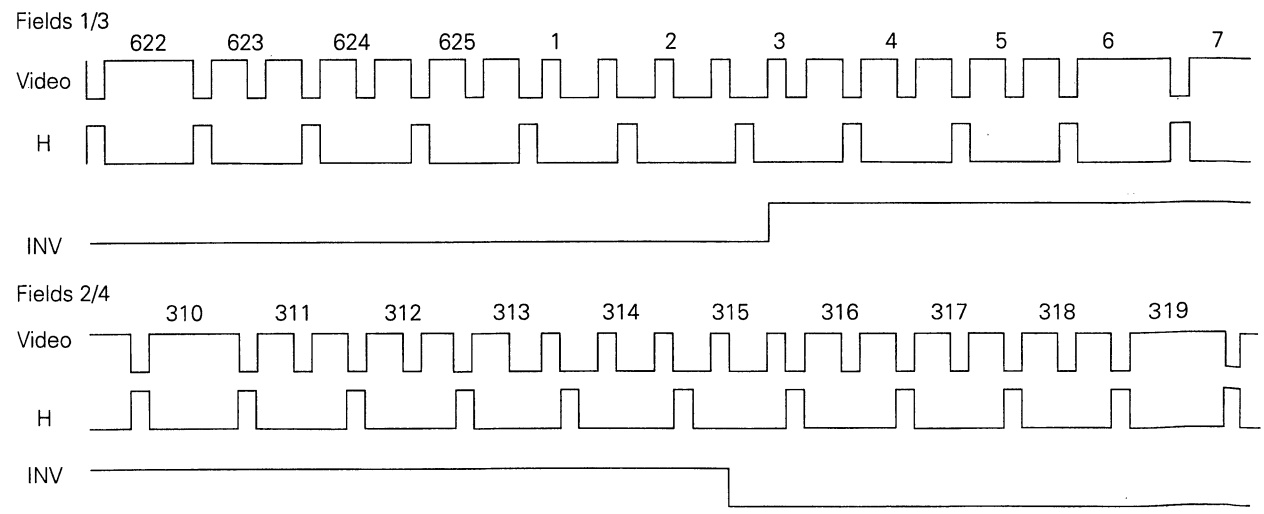

Fig. 9-2-4 H/V Timings (PAL)

9.2.3 DVIO (IC602)

The digital video signals supplied to the DV MAIN board are input to pins 110 to 117 (Y signal), pins 99 to 106 (C signal), pin 98 (CAM CLK), pin 118 (INH) and pin 119 (INV). The 4:2:2 format video data from the camera (Y: 8 bits, Cr/Cb: 8 bits, 13.5 MHz) is converted into the 4:1:1 (4:2:0 with PAL) format (Y/C: 8 bits, 18 MHz) data, which is output at pins 68 to 75 toward the Shuffle Memory IC.

With the BR-DV600, the analog Y/C signals output from the AGC are input. The analog video signals are input directly through pin 157 (Y signal) and pin 165 (C signal) and converted by two A/D converters on the board. The signal obtained by the sync separation of the input is input to pin 156, then subjected to the extraction of effective video area signals by eliminating the sync components. The subsequent processing is identical to the above.

During playback, the DV data in the 4:1:1 (4:2:0 with PAL) format is converted into the internal data of the 4:2:2 format and supplied to the analog video output circuitry. The analog output circuitry has 4 separate D/A converters for Y, C, Cr and Cb. The sync components are added to the Y signal and the encoder and burst addition functions are provided for the C signal.

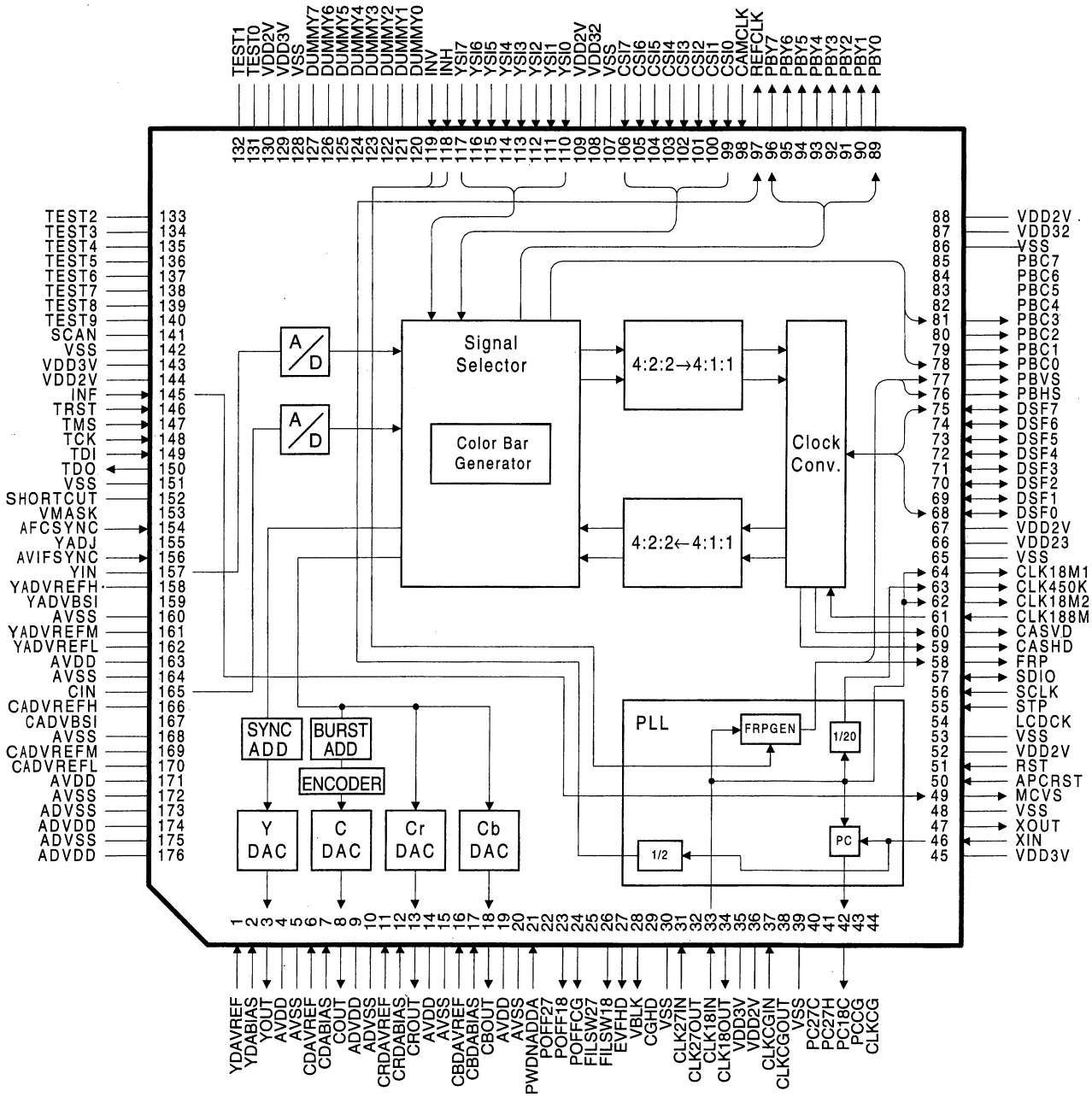

Fig. 9-2-5

9.2.4 PLL Operation

The DVIO IC has two PLL circuits, for 18 MHz and 27 MHz. The 18 MHz signal is the reference clock of the DV circuitry and the 27 MHz signal is used as the standard clock for the internal signal processing by the DVIO IC. First, the configuration of the 18 MHz PLL.

With camera video recording of the GY-DV500, the switch in PLL IC601 is set to the pin 33 input in both record and play modes. At this time, the reference signal is set to CAM IN by a switch in the DVIO IC and locked to CAM CLK.

With the DV terminal input signal (IEEE1394) or the analog input of the BR-DV600, the switch in the PLL IC is set to 1394REC. At this time, the 18 MHz clock is locked with the frame pulse of the DV input (receive) signal from the digital IF (IC801). The PC (Phase Comparator) used is located in the MSD IC (IC401).

The analog input is synchronized with AFC SYNC obtained by sync separation by the switch in the DVIO IC. For the reference signals of the PLL operations, see Table 9-2-1.

The 18 MHz reference clock is output at pin 62 of IC602 as CLK18M1 to the Shuffle Memory (IC302), and at pin 64 as CLK18M2 to the CAS (IC301), EDA (IC303) and digital IF (IC801). The 450 Hz signal obtained by dividing the clock is output at pin 63 as CLK450K to the PC of EDA (IC303) and used as the reference for recording clock VCO.

Now let us see the configuration of the 27 MHz PLL. When CAM IN is set, the video data signal is input to the DVIO IC at the timing of 27 MHz. As it is necessary to generate 27 MHz from CAM CLK in the PLL circuit, the signal is generated by the VCO in IC601. The reference signal becomes CAM CLK.

With recording of the DV terminal input signal or the analog terminal input signal, the crystal oscillators attached to the DVIO IC, X602 (27 MHz) and X603 (26.995 MHz) are used. X603 is used only when recording of analog input (see Table 9-2-1).

(Note) The DV terminal of the GY-D500E does not have a signal input function.

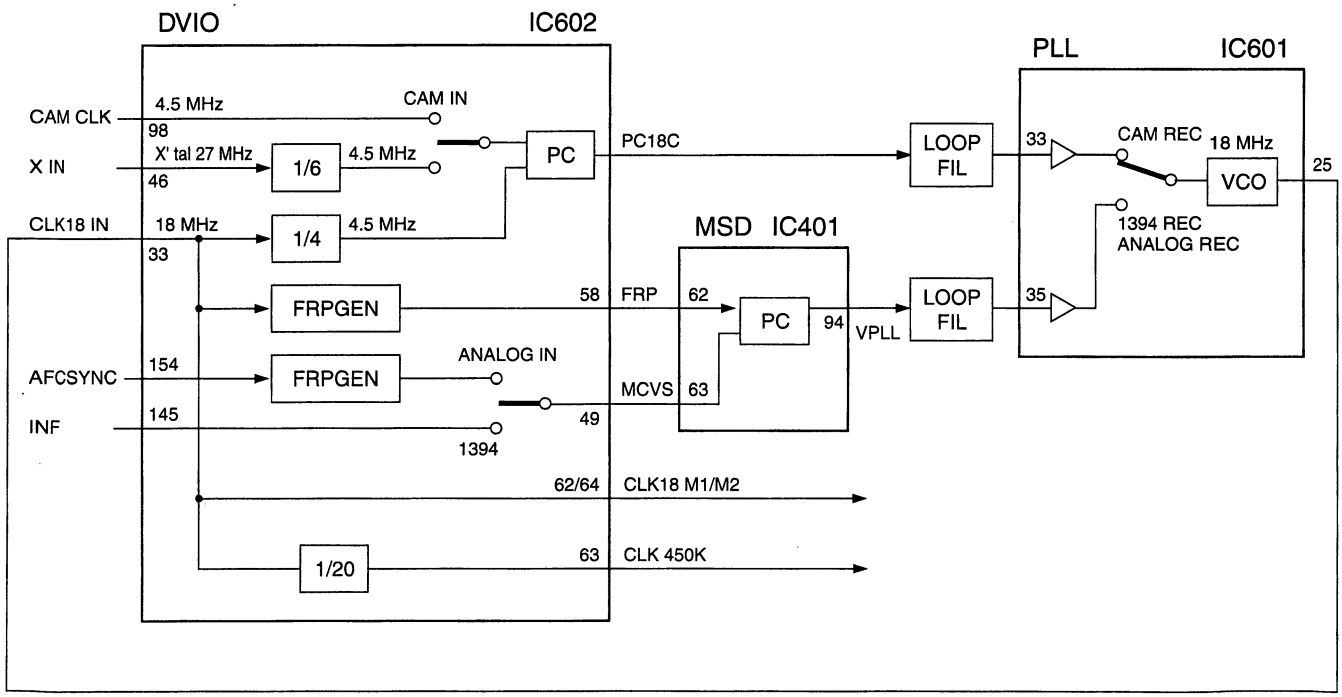

Fig. 9-2-6 Configuration of 18 MHz PLL

Input	18 MHz		27 MHz	
	Record	Play	Record	Play
CAM IN (GY-DV500)	CAM CLK	CAM CLK	CAM CLK	CAM CLK
IEEE1394	INF (IC801)	INF (IC801)	27 MHz (X602)	27 MHz (X602)
ANALOG IN (BR-DV600)	AFC SYNC	Crystal 27MHz	26. 995 MHz (X603)	27 MHz (X602)

Table 9-2-1 PLL Reference Signals

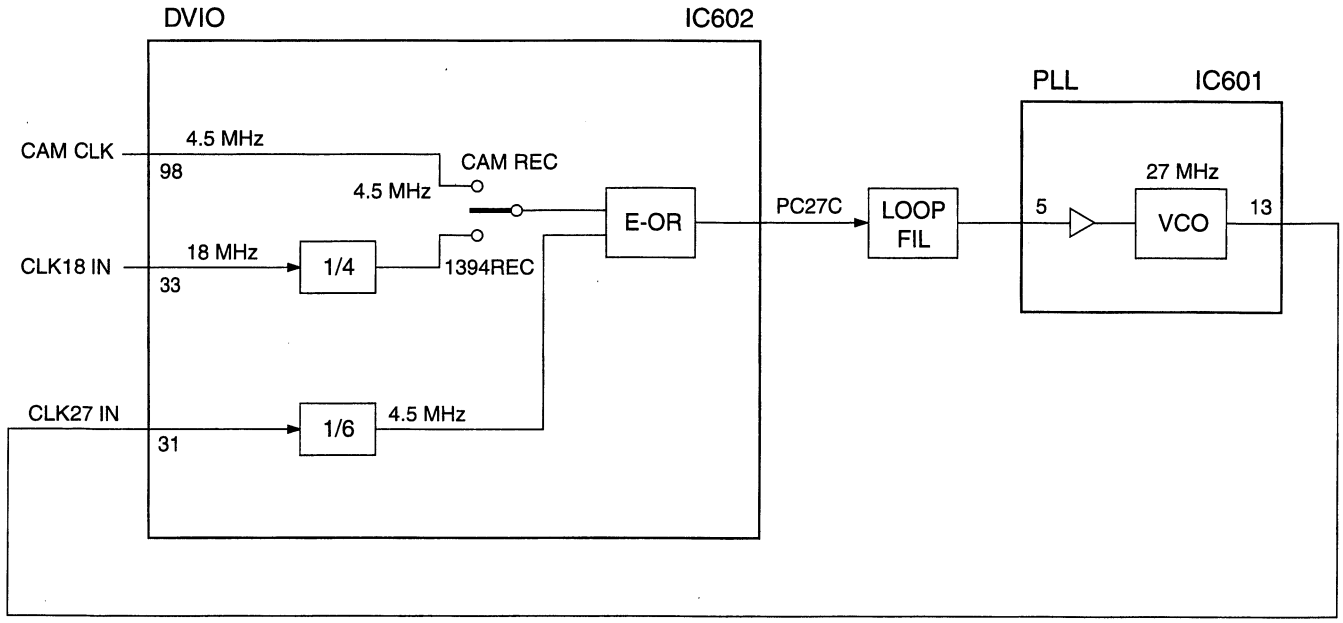

Fig. 9-2-7 Configuration of 27 MHz PLL

Mode Switching

IC601 can be set to the 18 MHz PLL mode using pins 29 and 30.

	(29)	(30)
(33) PB/CAMERA REC	H	L
(35) 1394 REC	L	H
Power Save	L	L

Table 9-2-2 Mode Setting Table

9.2.5 CAS (Compression/Audio/Shuffle)

IC301 executes digital signal processing for providing the video and audio signals with compliance with the DV format. Its built-in functions include compression, shuffling (respectively decompression and deshuffling in playback) and audio processing.

In recording, the CAS IC performs shuffling of the video signal by the Shuffle Memory address read/write enable control. It them processes the video data with discrete cosine transform (DCT), quantization and variable length coding (VLC) and sync block storage, and outputs the data to the DV bus.

The processing in playback is reverse to that in recording. The CAS IC extracts the video sync block data and audio sync block data from the DV bus and decodes the video and audio data from them.

The IC incorporates an audio clock PLL for synchronization of audio signal with the video signal.

It also incorporates the audio muting/fading function with the V-fade capability, which fades out or in the audio before and after an edit point based on the edit point information recorded on tape.

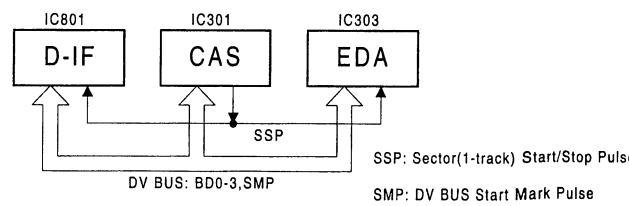

Fig. 9-2-8 DV Bus Connection

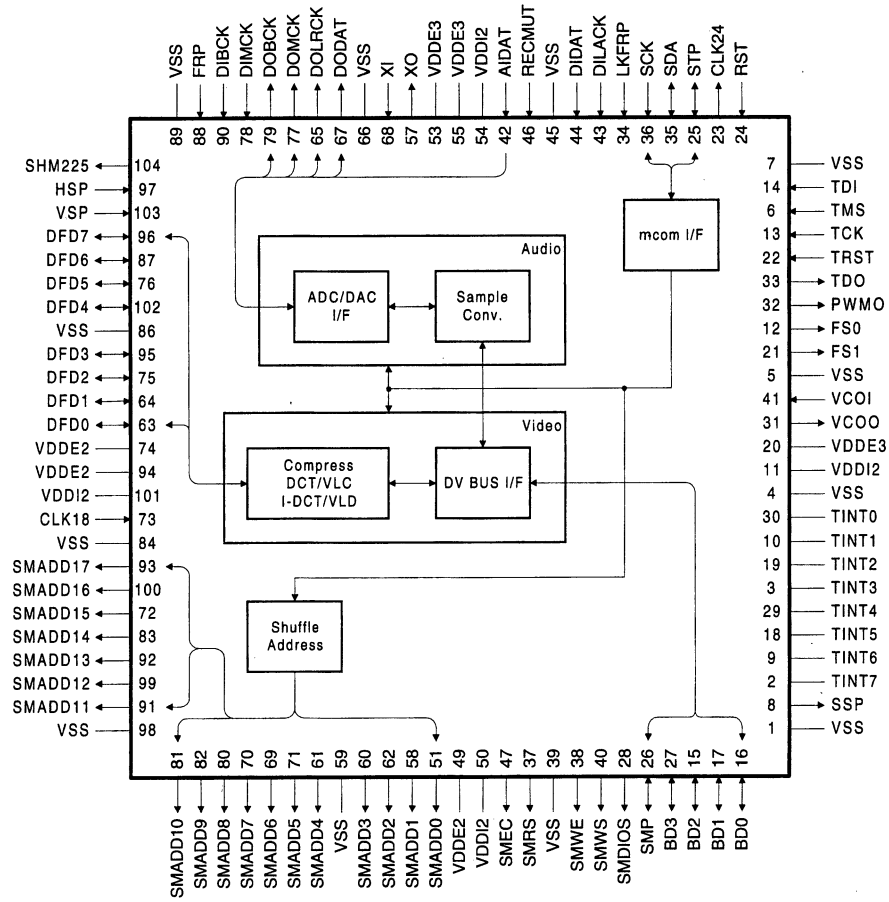

Fig. 9-2-9 Pin Layout of CAS IC301

9.2.6 Audio PLL Operation

The audio clocks include DOMCK, DOBCLK and DOLRCLK. The PLL circuits generating these clocks are IC307, IC306 (recording circuitry) and IC601 (playback circuitry).
The 265Fs audio master clock is generated from CLK18M of the video circuitry. The Audio PLL also manages the number of audio data items to be inserted in 1 frame of video data in order to lock the video and audio.

NTSC (525/60) operation
The number of samples per frame is not an integer in the 48 kHz mode because 48 kHz/30 (1000/1001) Hz = 1601.6. Therefore, the number of samples is assigned per 5 frames as shown below.

1st frame :1600 samples
2nd to 5th frames: 1602 samples
As the number of samples becomes 8008 per 5 frames, the audio can be locked with the video.

PAL (625/50) operation
The number of samples per frame becomes an integer because 48 kHz/25 Hz = 1920. Audio samples are simply recorded 1920 samples per frame.

The number of audio samples per frame is recorded in AUDIO AUX, and the master clock control during playback is performed based on the sample count information.

The PLL operation in recording starts with the generation of the 24.576 MHz CLK for use as the basis of the FS CLK by IC307 and IC306. Video clock CLK18M is input to IC307 which generates 27 MHz from it. Then, IC306 generates 24.576 MHz which is supplied to the CAS IC. As DOMCK is equal to 256Fs, it is 12.288 MHz in the 48K mode. DOMCK is divided to obtain DOBCLK and DOLRCK.

In playback, the FS CLK is generated by the VCO in IC601 based on FRP. The VCO can vary the clock frequency according to the mode selection (48K/41.1K/32K modes). The FS CLK is fed back to PWMO GEN in the CAS IC so that it is locked permanently with the video clocks.

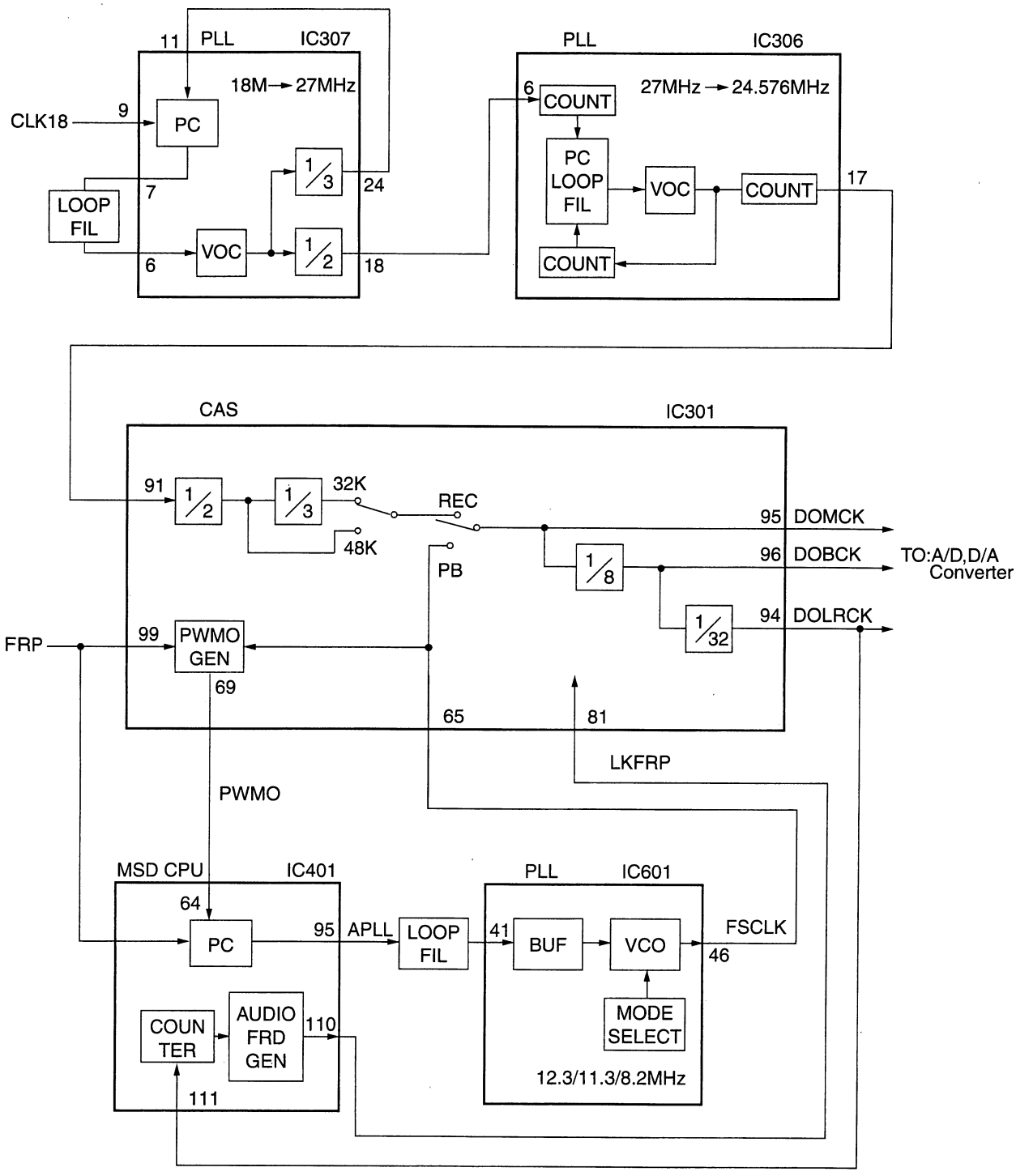

Fig. 9-2-10 Audio PLL

Mode Switching

The mode of the audio FS PLL in IC601 can be set using pins 39 and 40.

		㊵	㊴
㊻ FSCLK	12.3M(48K)	H	L
	11.3M(44.1K)	L	L
	8.2M(32K)	H	H

Table 9-2-3 Mode Setting Table

9.2.7 EDA (ECC/DCI/ATF)

IC303 executes ECC (Error Correction Code) processing, DCI (Digital Channel Interface) modulation/demodulation processing, ATF (Auto Tracking Function) error detection, head switch signal generation, viterbi decoding and clock phase correction.

In recording, the EDA IC receives the audio and video data from the DV bus and AUX and SUB CODE data (TIME CODE) from the MSD microcomputer (IC401), applies ECC and SI-NRZI/24-25 conversion, generates the recorded signal and outputs it to the REC amp.

In playback, the IC processes the PB signal from the PB equalizer with viterbi decoding, extracts the sync blocks and performs correction with ECC decoding. After this, the IC outputs the audio and video data to the DV bus and the AUX and SUB CODE data to the MSD microcomputer.

- ATFDET
  Detects errors for ATF in the DV format, and sends the results to the MSD I/F.
  The ATF signal extracted by PB EQ (IC501) is input from pin 48 and digitized by the 8-bit A/D converter.
- HID CTL
  Generates and outputs the head switching signal (HID).
- Viterbi
  The A/D converted 7-bit data for the viterbi detection circuit is input. See 9.2.8, "PB Equalizer".

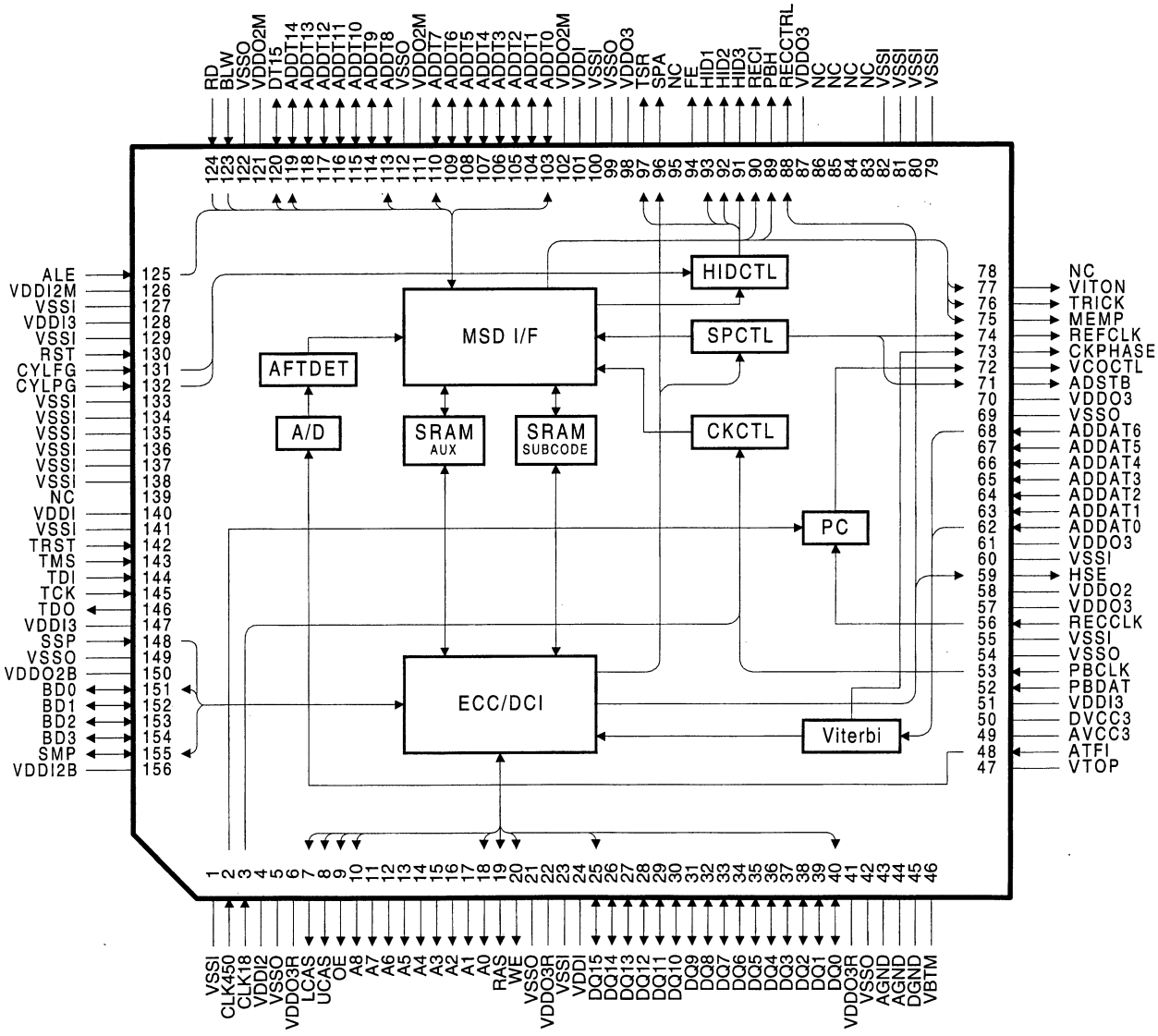

Fig. 9-2-11 Pin Layout of EDA IC303

9.2.8 PRE/REC

Although IC901 is originally a 3-channel head amp, this unit uses only two of these channels. In recording, recording signal HSE is input from EDA IC303 to the GCA (Gain Control Amp) inside the PRE/REC IC through pin 7. The GCA receives the recording current adjustment value from the EVR, input through pin 8, and adjusts the recording current according to it. The recording current is then sent through the REC amps and output at pins 29 and 31 toward the recording head.

In playback, the PB signal from the head is sent through Q903 and Q907, and input to this IC through pins 24 and 36. After the head switching by HSW, the signal is sent through the 3rd amp and output at pin 61, input to the AGC amp through pin 62, and finally output at pin 64 toward PV IQ IC304 on the DV MAIN board. The output from pin 57 is for use by the ATF but is also supplied to PB IQ IC304, where the ATF signal is extracted. The output at pin 59 is sent to the jig connector as the ENV OUT signal.

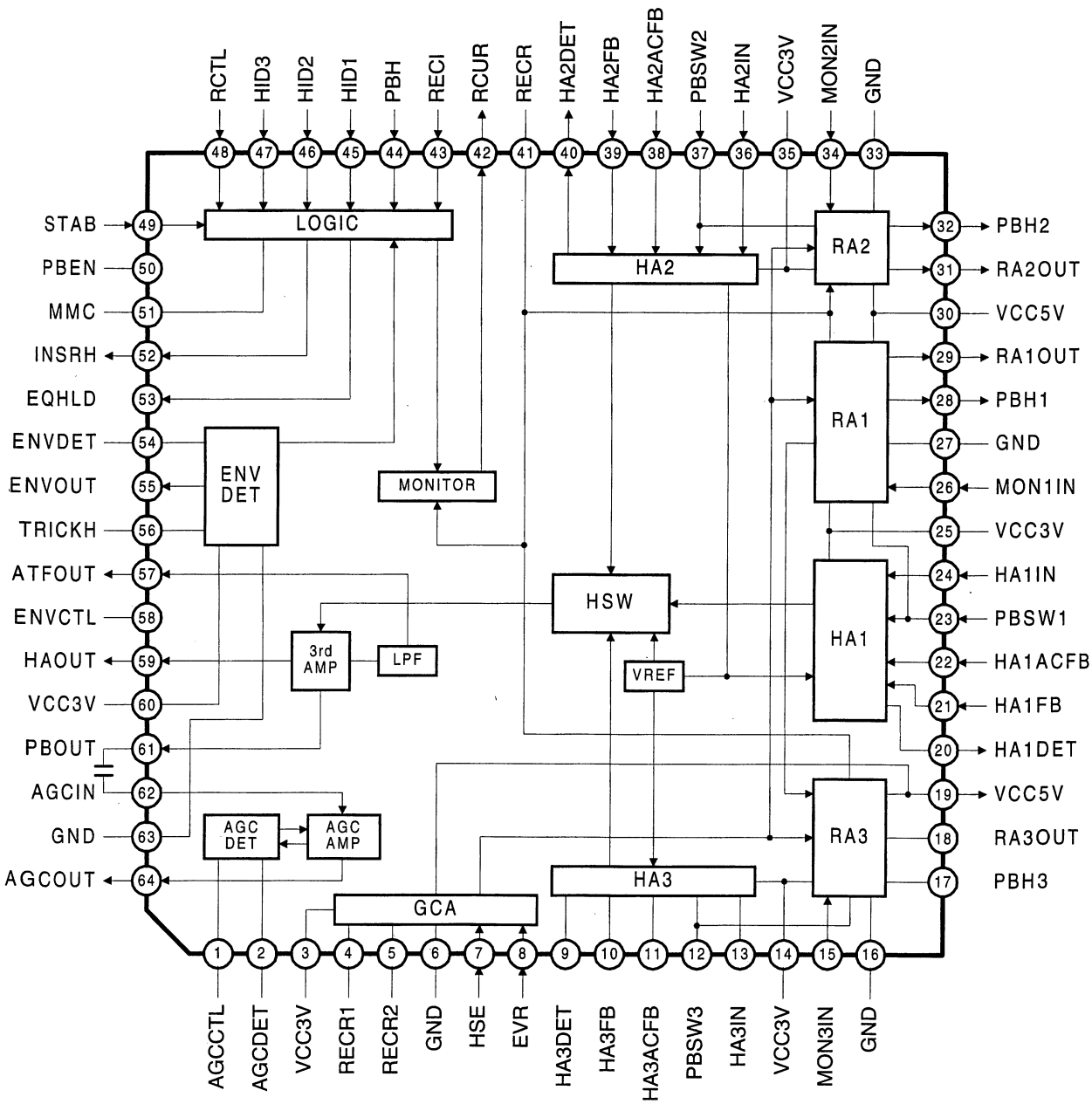

Fig. 9-2-12 Pin Layout of PRE/REC IC901

9.2.9 PB Equalizer

IC501 is the PB equalizer, which equalizes the waveform of the PB signal in order to correct code errors due to inter-code interference accompanying the magnetic recording/playback of high-density digital signals. The PLL circuit generates the phase-controlled play clock for use in correct recognition of the playback data. A BPF for the ATF signal extraction is also mounted to send the STF signal to EDA IC303. A VCO of the recording clock (41.85 MHz) for use in recording is also provided and outputs signal at pin 31.

PB Equalizer/PLL Circuit

The waveform of the PB signal output from the pre-amp is equalized by PRE-EQ and AUTO-EQ and optimized for decoding. After the 1+D characteristic is added, the signal is output at pin 53 as the 1+D OUT signal to be sent to A/D converter IC305 for viterbi processing. Since the DV uses SI-NRZI modulation, the 1+D OUT signal has an analog waveform with ternary (1, 0, -1) data. It is converted by the A/D converter into a 7-bit digital signal and input to the viterbi circuit in EDA IC303. The digitized ternary data is subjected to highly accurate code error correction based on viterbi detection, and converted by the ternary-binary converter into binary (1, 0) PB data.

The 1+D OUT signal is also output at pin 56. It is passed through the buffer of Q501 and Q503, input again through pin 55, subjected to ternary value detection and binary conversion by the DATA DET circuit using the conventional fixed threshold method, and output at pin 33 as PB DATA. This becomes the PB data when the viterbi circuit is off. However, as the viterbi circuit is permanently working with this unit, this occurs only when the viterbi circuit is forced off by the service adjustment software. It is used in the inherent error rate checking without viterbi detection.

The PB CLK is permanently subjected to phase comparison with the PB data by the PLL circuit, so it is always output in synchronism with the PB data. One of the PB CLK outputs is output at pin 36 as A/D CLK and supplied to A/D converter IC305 for viterbi processing. Another output becomes PB CLK supplied to the EDA IC303. As the sampling points vary when A/D conversion based on AD CLK is performed, it is required to execute sampling at the correct position so that the viterbi detection circuit can function normally. To ensure this, the viterbi circuit outputs the phase correction information at pin 73 as the CK PHASE signal for use in fine phase adjustment by PS (Phase Shift) in the PLL circuit. For the error rate adjustment, the adjustment data from EVR IC503 is converted from serial to parallel then input to the adjustment points. First adjust the VCO voltage to the specified value, then perform the PB EQ adjustments by adjusting of the other adjustment points in the specified order to minimize the error rate.

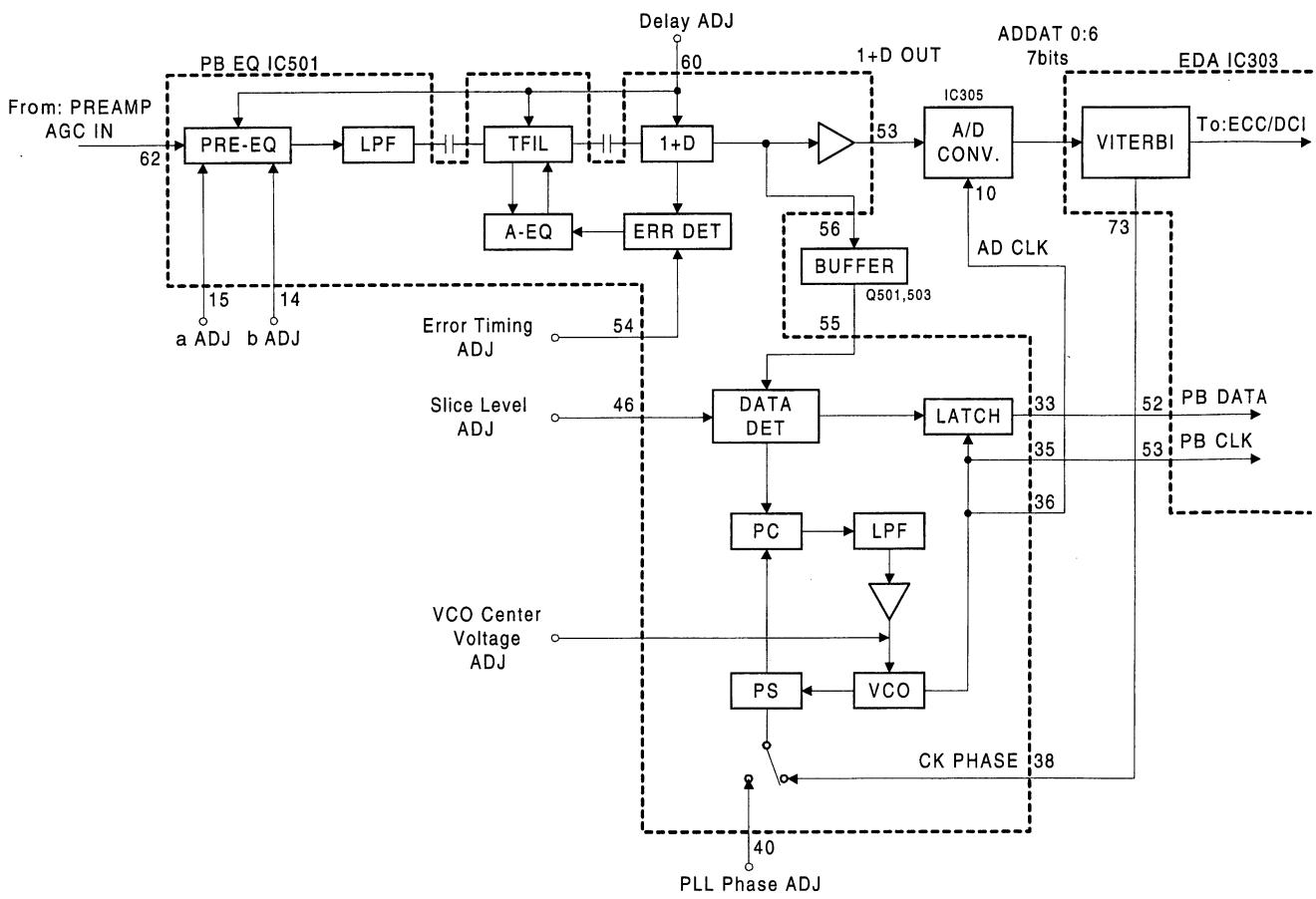

Fig. 9-2-13 Configuration of PB EQ Block

9.2.10 DV Interface

(1) IEEE1394

The IEEE1394 data transfer handles both the sync data that should be sent periodically (isochronous data transfer) and the unsynchronous data that can be sent or received at any desired time (unsynchronous data transfer). When transferring data that should be real time such as video and audio signals, data would be lost and the video or audio would be interrupted during the transfer unless communication at constant time intervals is not guaranteed. The isochronous data transfer is capable of real-time data transfer because it reserves the necessary bandwidth for transfer in advance and sends packets every 125 μs (8000 times per sec.).

IEEE1394 defines three data rates of 98.304 Mbps (S100), 196.608 Mbps (S200) and 393.216 Mbps (S400). By defining that a device capable of a high rate should also support a slower rate than this, upward compatibility is provided.

The bus is constructed so that multiple devices (up to 63 components) can communicate between each other without switching the cable and be connected without turning the power off (hot swapping). When the devices are connected, the bus is initialized to form a tree structure in which one of the devices is the root and the others are the branches or twigs of the tree, then the IDs of the devices are assigned automatically (see Fig. 9-2-14).

As seen below, IEEE1394 features a higher degree of freedom in connection than the SCSI standard and the automation of associated settings.

The IEEE1394 standard cable has 6 pins including a pair of power lines and 2 pairs of signal lines, but by excluding a pair of power lines the DV terminal (DV cable) is more compact and has only 4 pins. The maximum length of the DV cable is 4.0 meters and the compatible rate is 100 Mbps (S100) (see 9.4.2, "DV Terminal").

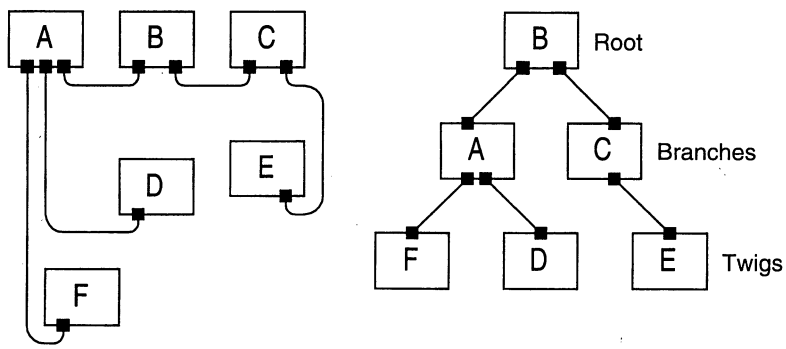

Fig. 9-2-14 Configuration of IEEE1394

(2) AV Protocol

The AV protocol is the format for transferring the digital video signal using the isochronous communication of IEEE1394. As the digital video standard defines that audio and video signal data should be transferred as arrays of 80-byte block data called the DIF blocks, the isochronous communication with packet transfer at every 125μs should send six DIF blocks per packet. As a result, the data of a video frame is transferred in 250 packets.

A total of 150 blocks, including 1 header block, 135 video data blocks, 9 audio data blocks, 3 video auxiliary data blocks and 2 sub-code data blocks in 25 packets from a single DIF sequence, which corresponds to the data of a track on DV tape. With NTSC, 10 tracks of data correspond to 1 video frame.

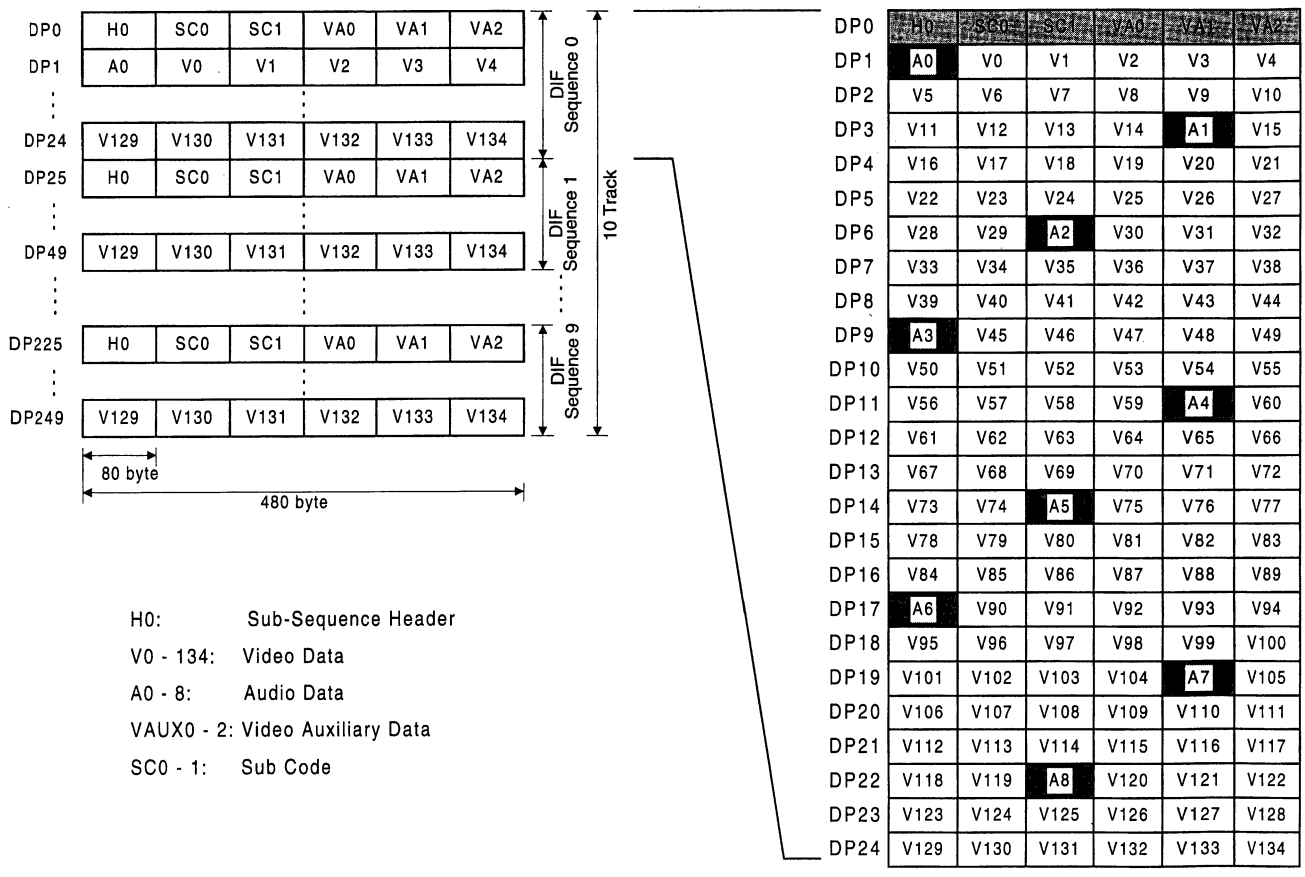

H0: Sub-Sequence Header
V0 - 134: Video Data
A0 - 8: Audio Data
VAUX0 - 2: Video Auxiliary Data
SC0 - 1: Sub Code

Fig. 9-2-15 Data of One Video Frame (NTSC)

(3) DV Bus

The DV bus signal after the video compression by DV till the error correction by ECC includes the audio component and takes the DV standard data format. This bus is connected to the Digital I/F, where the signal is converted into an IEEE1394 compliant signal that is output from the DV output terminal.

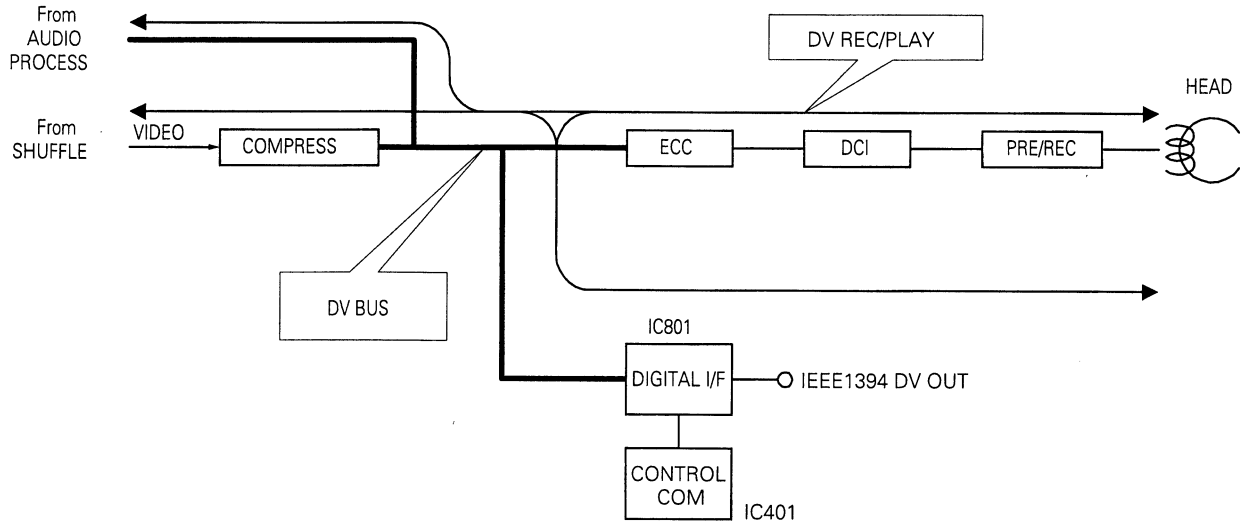

Fig. 9-2-16 DV Output Block Diagram

(4) Input/Output Signals

- DS coding

  IEEE1394 transfers signals through 2 pairs of twisted cables. One of the pairs is used to transfer data and the other is used to transfer strobe signals. The receiving party can reproduce the original signal by XORing the two signals. This method is referred to as DS (Data-Strobe) coding.

- Connection of twisted pair cables

  The signal lines from the DV terminal are connected directly to pins 69 to 72 of IC801.

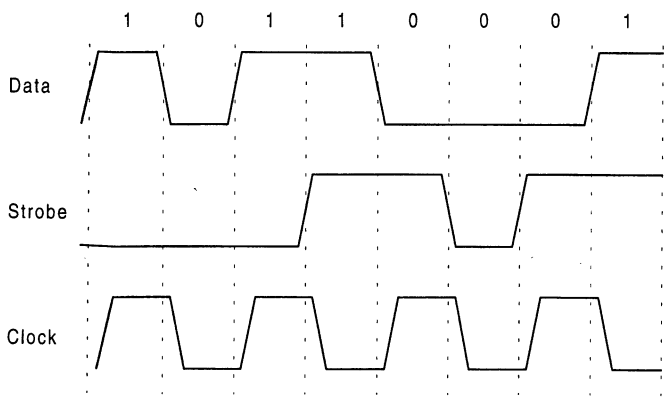

Fig. 9-2-17 DS Coding

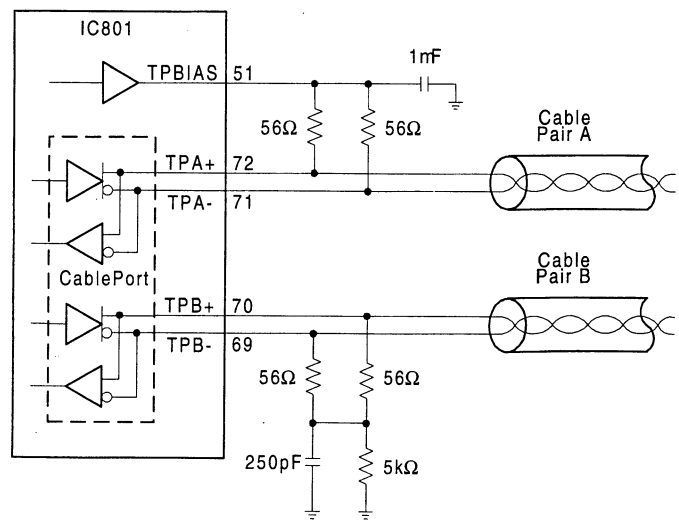

Fig. 9-2-18 Connection of Twisted Pair Cables

(5) Digital I/F

Digital I/F IC801 is an interface IC for use in DV terminal input/output(*), and is compliant with IEEE1394. Digital I/F IC801 integrates the LINK and PHY blocks and is connected directly to the DV bus. The MSD IC functions as the control microcomputer.

DV bus data BD0 to 3 are connected to pins 130 to 133, the SMP (Start Mark Pulse) is connected to pin 134 and the SSP (Sector Start Pulse) is connected to pin 144.

The internal blocks of the Digital I/F IC include the LINK block, PHY block and the control microcomputer. The LINK block processes the IEEE1394 Link layer and AV protocol, the PHY block processes the bus initialization, bus usage regulation and relay of signals from other devices, and the control microcomputer processes, the control of LINK and PHY blocks, acquisition of the isochronous communication band and management of the bus.

(*)PAL model is output only.

Pin Layout of Digital I/F IC801

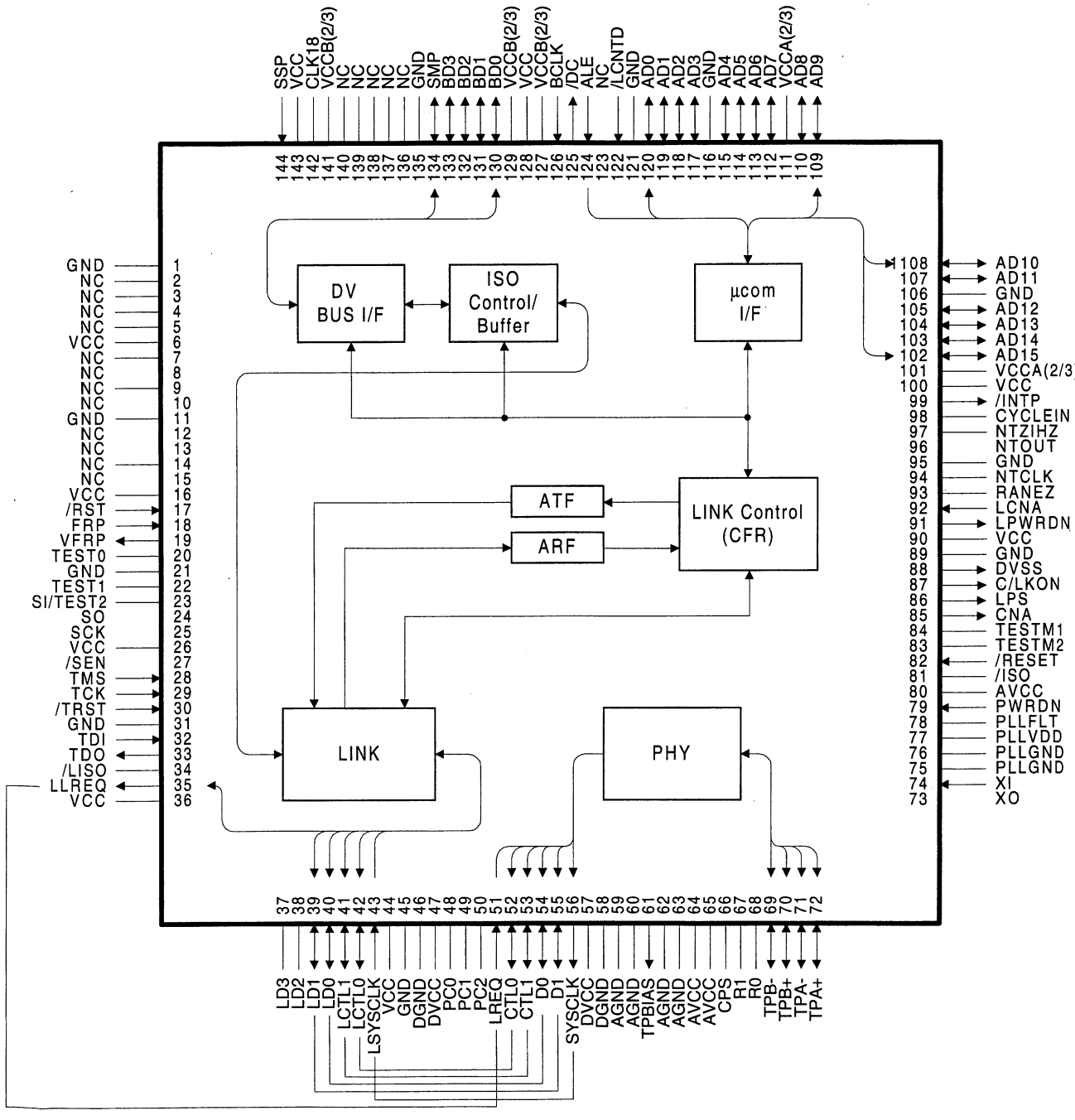

Fig. 9-2-19 Pin Layout of Digital I/F IC801

9.2.11 Audio A/D and D/A

IC201 (AK4518) is a 16-bit A/D & D/A converter IC. The A/D converter functions in recording and the D/A converter functions in playback.

To reduce the power consumption, the IC has the facility of shutting down any A/D or D/A converter that is not used.
The audio data is input and output through pins SDT1 and SDT0 according to SCLK and LRCK. Fig. 9-2-20 shows the data format.

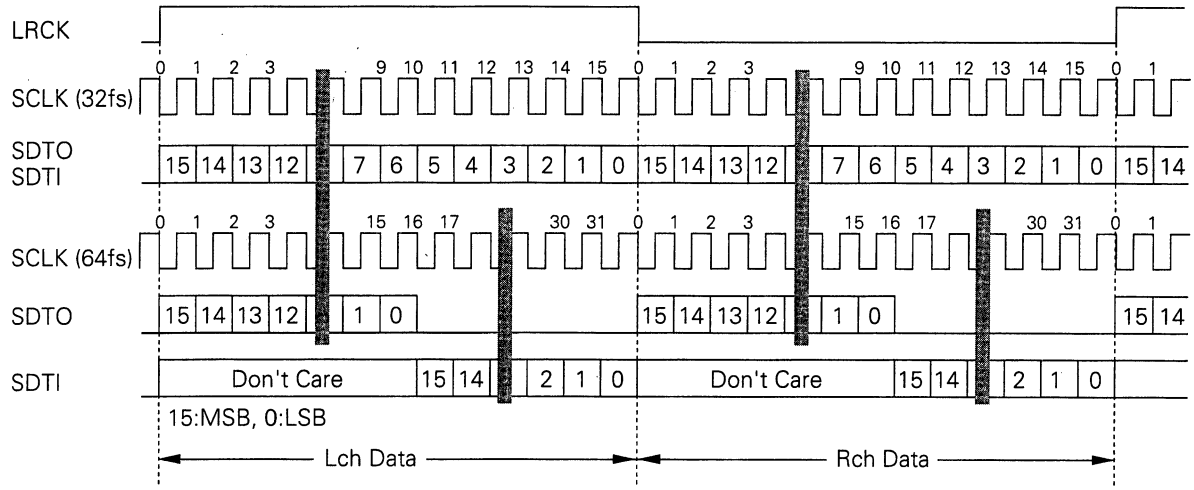

Fig. 9-2-20 Audio Interface Timing (fs = 48 kHz)

Pin No.	Label	In/Out	Description
1	VRDA	In	Voltage Reference Input for DAC, VA
2	VRAD	In	Voltage Reference Input for ADC, VA
3	AINR	In	Analog Input (R-CH)
4	VCMR	Out	R-Ch Common Voltage Output
5	VCML	Out	L-Ch Common Voltage Output
6	AINL	In	Analog Input (L-CH)
7	PWAD	In	ADC Power-Down Mode "L" : Powe down
8	PWDA	In	DAC Power-Down Mode "L" : Powe down
9	MCLK	In	Master Clock Input
10	LRCK	In	L/R CH Clock Input
11	SCLK	In	Audio Serial Data Clock Input
12	SDTO	Out	Audio Serial Data Output
13	DGND	–	Digital GND
14	VD	–	Digital Power Inputl
15	SDTI	In	Audio Serial Data Input
16	CMODE	In	Master Clock Select Input "H": 384 fs or 512 fs, "L": 256 fs.
17	DEM1	In	De-emphasis filter switching
18	DEM0	In	
19	AOUTL	Out	Analog Output (L-CH)
20	AOUTR	Out	Analog Output (R-CH)
21	VCOM	Out	Common Voltage Output
22	AGND	–	Analog GND
23	VB	–	Substrate
24	VA	–	Analog Power

DEM1	DEM2	MODE
0	0	44.1kHz
0	1	OFF
1	0	48kHz
1	1	32kHz

Fig. 9-2-21 IC201 Pin Function Table

9.2.12 Audio Circuit (Audio/LCD Board)

(1) Limiter/ALC circuit

BA3314F (IC206, IC207) on the Audio/LCD board is a dual amp incorporating ALC circuitry. This unit uses only one of the amplifiers. The audio signal input through pin 2 is sent through the limiter (ALC) amp and output at pin 12. Pin 14 is the ALC filter, and either the limiter or ALC operation can be selected by varying the externally connected time constant. The limiter/ALC operations are switched by changing the time constant by turning transistors Q203 and Q204 ON and OFF.

The bases of these transistors are connected to limiter switches S203 and S204.

(2) Limiter/ALC characteristics

The operational characteristics and attack/recovery time of the limiter/ALC are as shown below. The limiter is activated at reference input of +15 dB while the ALC is activated at the reference level.

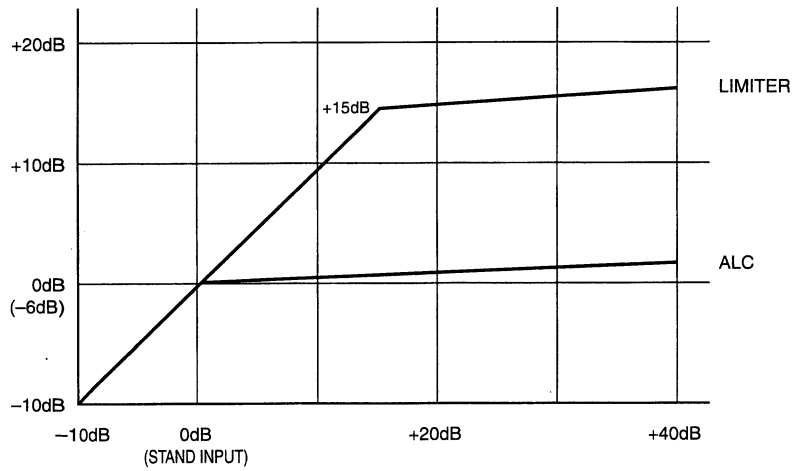

Fig. 9-2-22 Limiter/ALC Operation Characteristic

	Attack time	Recovery time
ALC	Approx. 50 ms	Approx. 10ms.
Limiter	Approx. 10 ms	Approx. 5ms.

Table 9-2-4

(3) **Operation matrix**

Input		AUTO/MANUAL Switch	Operation
LINE	+4dBs	AUTO	ALC ON
		MANUAL	ALC/LIMITER OFF
	–60dBs	AUTO	ALC ON
		MANUAL	LIMITER ON
CAMERA		AUTO	ALC ON
		MANUAL	LIMITER ON

Table 9-2-5

9.3 MECHANISM OPERATION DESCRIPTION

9.3.1 Technology Employed with the Mechanism

1. Outline

The mechanism is based on the mechanism used with the HR-DVS1 mini DV & S-VHS recorder for consumer use. After modifications for improvement of reliability, the present mechanism has been developed as the common mechanism for the GY-DV500 professional DV camcorder and the BR-DV600 DV videocassette recorder.

The main features of the mechanism are as follows.

- High rigidity main deck chassis
- High speed mechanism (FF/REW at about 20X speed)
- High response mechanism
- Active head cleaner for prevention of dirt deposition on the head

2. Main Technologies

(1) High rigidity

To withstand the heavy-duty use by professionals, the main deck chassis is designed to have a thickness of 0.8 mm (about 1.3 time that of the consumer-use DV Movie). The mechanism is damper-mounted on the camcorder body to reduce effects of external forces and absorb distortion due to mounting.

(2) High speed mechanism

In FF/REW, the clutch mechanism is improved coupled to the acceleration mechanism to enable high-speed operations of 20 times the normal speed.

(3) High response mechanism

The mode transition method is improved by eliminating the STOP mode during transition between FWD and REV modes.

(4) Active head cleaner

The mechanism is equipped with an active head cleaner, which is composed of a mechanical head cleaner working during loading/unloading and its control solenoid. The active head cleaner can clean the head even when a tape is loaded. It ensures the reliability for professional use by preventing video degradation due to dirt on the head before it occurs.

(5) Tape-friendly transport system

Mechanism control software matching the mechanism is used to handle tape gently and improve the reliability.

9.3.2 Loading Operation

Fig. 9-3-1 shows the flow chart of mechanism operations. The figures inside [ ] after the name of each part is the number of description text reference. Please refer to the disassembly diagrams, mechanism parts list and standard circuit diagrams for the description.

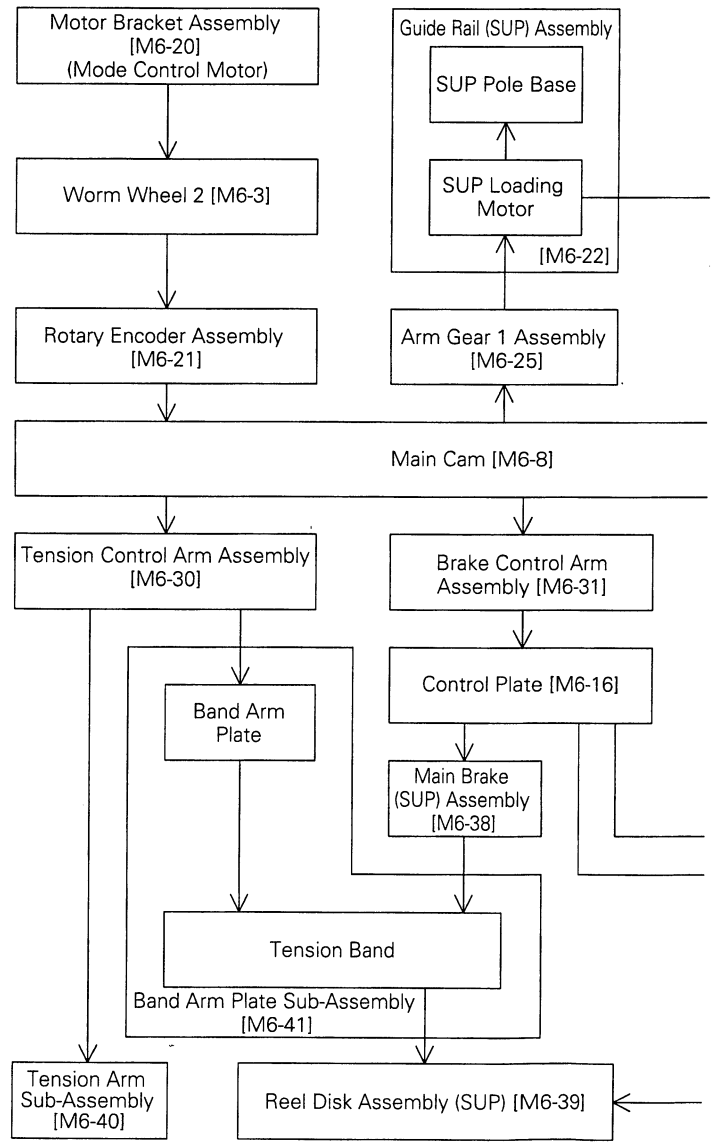

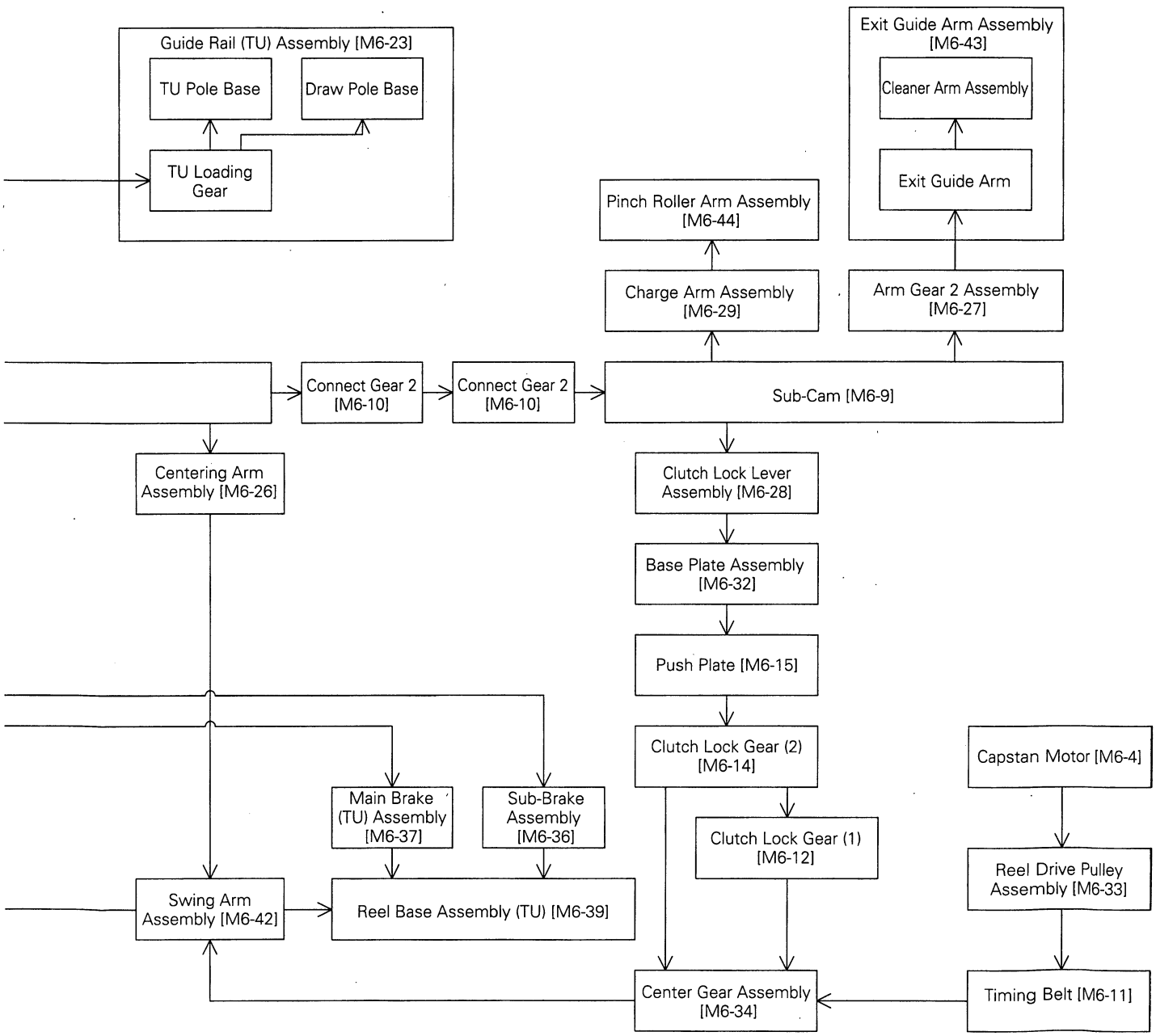

Fig. 9-3-1 Correlation of Operations of Professional DV Mechanism

1. Motor Bracket Assembly, Rotary Encoder Assembly

(1) Motor bracket assembly [M6-20]
The motor bracket assembly is composed of a mode control motor and worm gear. It drives the rotary encoder assembly [M6-21] by means of worm wheel 2 [M6-3].
The mode control motor controls the mechanism mode transition (loading/unloading) and selection. The motor ON/OFF status and rotation direction are controlled by the MSD CPU (DV MAIN IC401). The rotation of the mode control motor is transmitted through worm wheel 2 to the switchboard of the rotary encoder for detection and changing of mechanism mode.

(2) Rotary encoder assembly [M6-21]
The rotary encoder assembly is composed of a switch and gear. The rotation angle of the gear is detected from the ON/OFF status of the switch. The ON/OFF status of the switch is in accordance with the mechanism mode, and the information is transmitted to the MSD CPU. The MSD CPU detects the mechanism mode based on this information and controls the mode control motor, drum and capstan motor. The gear of the rotary encoder is also used to transmit the rotation of the mode control motor to the main cam and sub-cam.

(3) Main cam [M6-8]
The main cam controls the supply and take-up loading mechanism. The control groove on the bottom surface of the main cam controls the arm gear 1 assembly [M6-25] and centering arm assembly [M6-26]. The arm gear 1 assembly controls the loading/unloading of the guide roller by controlling the loading gear. The centering arm assembly controls the swinging of the swing arm assembly [M6-42].
The groove on the top surface of the main cam controls the brake control arm assembly [M6-31] and tension control arm assembly [M6-30]. The brake control arm assembly controls the main brake assemblies (SP, TU) [M6-38, 37] and sub-brake assembly [M6-36], and the tension control arm assembly controls the tension arm sub-assembly [M6-40] and band arm plate sub-assembly (tension band) [M6-41].

(4) Sub-cam [M6-9]
The sub-cam controls the loading mechanism on the take-up side. The control groove on the bottom surface of the sub-cam controls the arm gear 2 assembly [M6-27] and clutch lock lever assembly [M-28]. The arm gear 2 assembly controls the exit guide arm assembly [M6-43] and the clutch lock lever assembly controls the clutch lock gears 1 and 2 [M6-12, 14] through the base plate assembly [M6-32].
The control groove on the top surface of the sub-cam controls the charge arm assembly [M6-29]. The charge arm assembly controls the pinch roller arm assembly [M6-44].

2. Tension Arm Sub-Assembly, Reel Brake Operation

(1) Tension arm sub-assembly [M6-40]
The tension arm control arm assembly [M6-30] is controlled from the control groove on the main cam and controls the tension arm sub-assembly. The tension arm sub-assembly has the band arm plate sub-assembly (tension band) [M6-41] attached to it for use in controlling the back tension of the tape.

(2) Main brake assembly (SUP) [M6-38]
The main brake assembly (SUP) is controlled by the brake control arm assembly and used to apply the disk brake of the supply reel so that the tape is not slackened during standby mode after it has been taken out of the cassette. It also applies back tension during FF to avoid slack winding.

(3) Main brake assembly (TU) [M6-37]
The main brake assembly (TU) is controlled by the brake control arm assembly and used to apply the disk brake of the take-up reel so that the tape is not slackened during standby mode after it has been taken out of the cassette. It also applies back tension during REW to avoid slack winding.

(4) Sub-brake assembly [M6-36]
The sub-brake assembly is controlled by the brake control arm assembly and used to apply the disk brake of the take-up reel so that the tape is not slackened during a reverse search.

3. Tape Drive Operations

The rotation of the capstan motor is transmitted through the reel drive pulley assembly [M6-33] and timing belt [M6-11] and finally to the center gear assembly [M6-34].

(1) Center gear assembly
The center gear assembly has a clutch mechanism and controls the tape winding force. The clutch mechanism is not the felt contact type used with VHS recorders but is of the magnetic, non-contact type mechanism. The magnetic clutch features stable performance because it is less sensitive to temperature and humidity than the felt-based clutches. When the magnetic clutch mechanism is worn, the winding force increases, which is an opposite effect to that of the felt-based clutch mechanisms.

(2) Clutch lock gears (1, 2) [M6-12, 14]
The clutch lock gears (1, 2) are controlled by the clutch lock lever assembly. They function as the accelerator mechanism during FF/REW to increase the operation speed.

(3) Swing arm assembly [M6-42]
The swing arm assembly swings under the control of the centering arm assembly [M6-26], and functions to wind tape on the SUP/TU reel disk by transmitting the rotation force of the center gear assembly.

(4) Pinch roller arm assembly [M6-44]
The pinch roller arm assembly is controlled by the charge arm assembly [M6-26] and functions to keep the tape in tight contact with the capstan.

(5) Exit guide arm assembly [M6-43]
The exit guide arm assembly is controlled by the arm gear 2 assembly [M6-27] and functions to regulate the tape drawn from the TU reel and the tape transport. The exit guide arm assembly has a mechanical head cleaner installed on it for cleaning the head during loading or unloading.

Mechanism Layout

• Mechanism explowed view M6 (for reference)

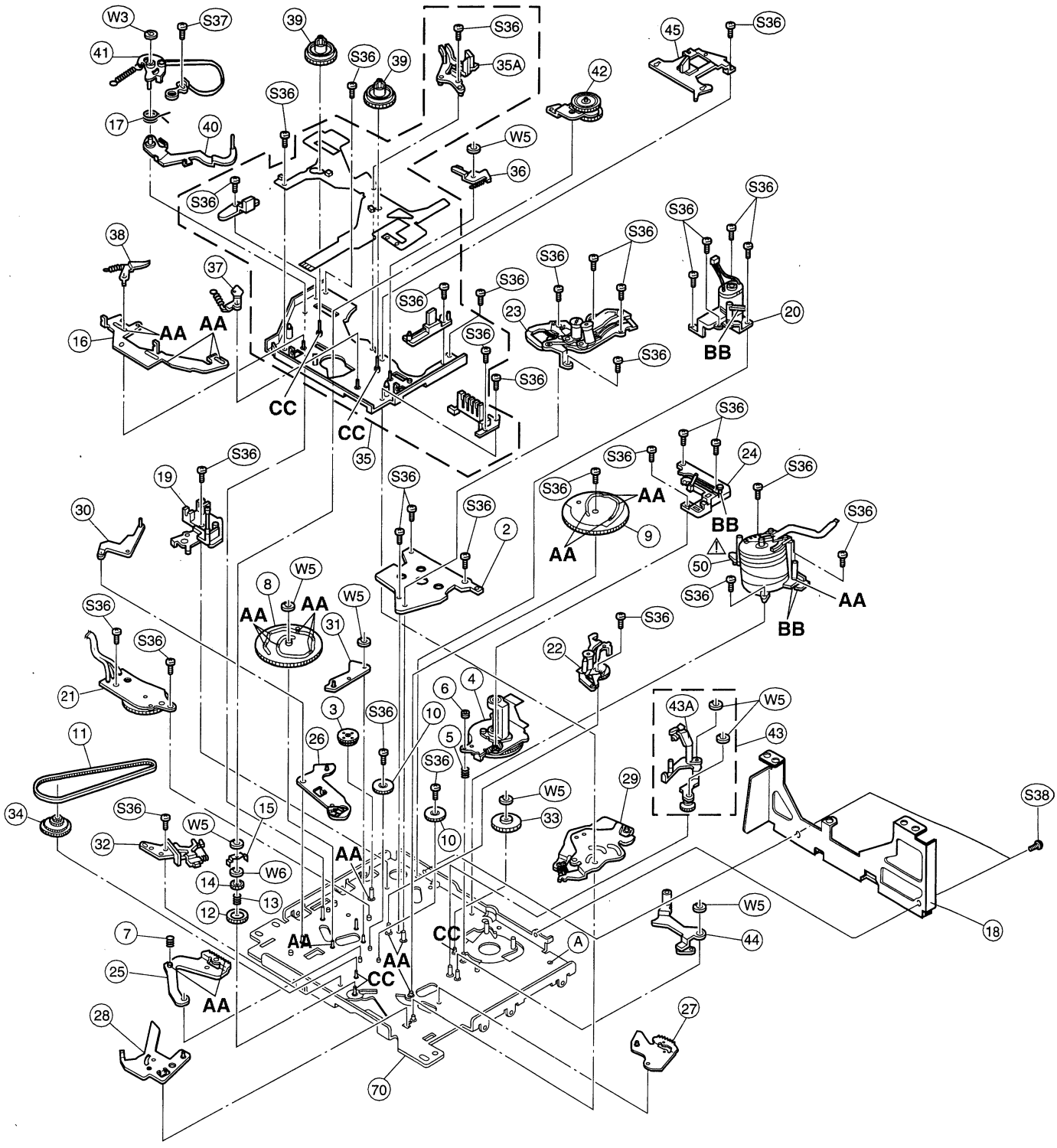

9.3.3 Mechanism Operations

1. Outline

The mechanism mode is changed according to the rotation of the mode control motor. The mode change is managed by the MSD CPU, which detects the mechanism mode from the 3-bit signal sent from the rotary encoder assembly. The mechanism used with this unit has 7 mechanism modes (positions).

2. Mechanism Modes

For detailed operation timing of major parts in each mode, see the Mechanism Timing Chart.

(1) Assembly mode
This mode is used in the mechanism assembly. Before starting disassembly or assembly of the mechanism, set it to this mode. As the mechanism is usually in the C-IN mode when no tape is loaded, it can be put into the assembly mode by applying 3 V DC to the electrode of the mode control motor. See Chapter 2, "Mechanism Adjustments" for details.

(2) C-IN mode
The mechanism is in this mode when the cassette has been inserted or ejected. After an eject operation, the mechanism stands by in this mode until the next time a cassette is loaded.

(3) Short FF mode
This mode is activated when the beginning of a tape is detected. In this mode, the mechanism feeds tape in the FWD direction at about double speed until the tape beginning detection signal is canceled. This mode is positioned between the C-IN mode and STANDBY ON (STOP) mode, and the mechanism feeds tape in the FWD direction to remove tape slack.

(4) PLAY/REC/FWD/STANDBY ON mode
These modes occur during playback or recording, as well as during forward search (pinch roller on, max. about 10X speed) which is initiated by pressing the FF button during playback. The mechanism usually stands by in this position in the STANDBY ON (STOP) mode, but enters the STANDBY OFF mode according to the long pause setting. The mechanism can be set to enter the STANDBY ON mode in any of the following cases.
1) When a cassette is loaded: The mechanism mode changes from C-IN to STANDBY ON automatically.
2) When the STOP button is pressed in PLAY, REC, FWD, REV, FF or REW mode.
3) When the beginning of the tape is detected during REW or REV.

(5) REV mode
The mechanism enters this mode when reverse search (pinch roller on, max. about 10X speed) is started by pressing the REW button during playback. In addition, when the mechanism mode changes from C-IN to STANDBY ON (STOP) after a cassette has been loaded, the mechanism also enters this mode automatically during a few seconds of reverse search for the tape winding diameter detection.

(6) STANDBY OFF (STOP) mode
The mechanism is in this mode when the mechanism with tape loaded stands by after a long pause setting period has elapsed or when the power is OFF.

(7) FF/REW mode
The mechanism is in this mode during FF or REW (pinch roller off). The tape is transported at about 13X speed in FF and about 20X speed in REW.

9.3.4 Operation of Active Head Cleaner

The STILL or REC PAUSE mode is canceled in 30 minutes (at above 10°C) or 3 minutes (at below 10°C). However, this time count is reset when the active head cleaner is turned on. The active head cleaner operation stops when the mode changes in the middle of cleaning.

• The active head cleaner is activated in the following cases.
1) Every time after a tape has been loaded.
2) In STOP, STILL or REC PAUSE mode after the PLAY or REC has continued for more than 15 minutes.
3) In STOP, STILL or REC PAUSE mode after FWD or REV search has continued for more than 10 minutes.
4) In STOP, STILL or REC PAUSE mode after FF or REW has continued for more than 10 minutes.
5) When STILL has continued for more than 30 minutes (at above 10oC) or 1 minute (at below 10°C).
6) When REC PAUSE has continued for more than 3 minutes (at above 10°C) or 10 minutes (at below 10°C).
7) In STOP, STILL or REC PAUSE mode after the error rate above 2K has continued for 5 seconds or more. (Once the active head cleaner is turned on this reason, it will not turn on again unless the error rate has dropped to below 500 for more than 5 seconds continuously.)
8) When power is turned ON while a cassette is loaded.

Mechanism Timing Chart

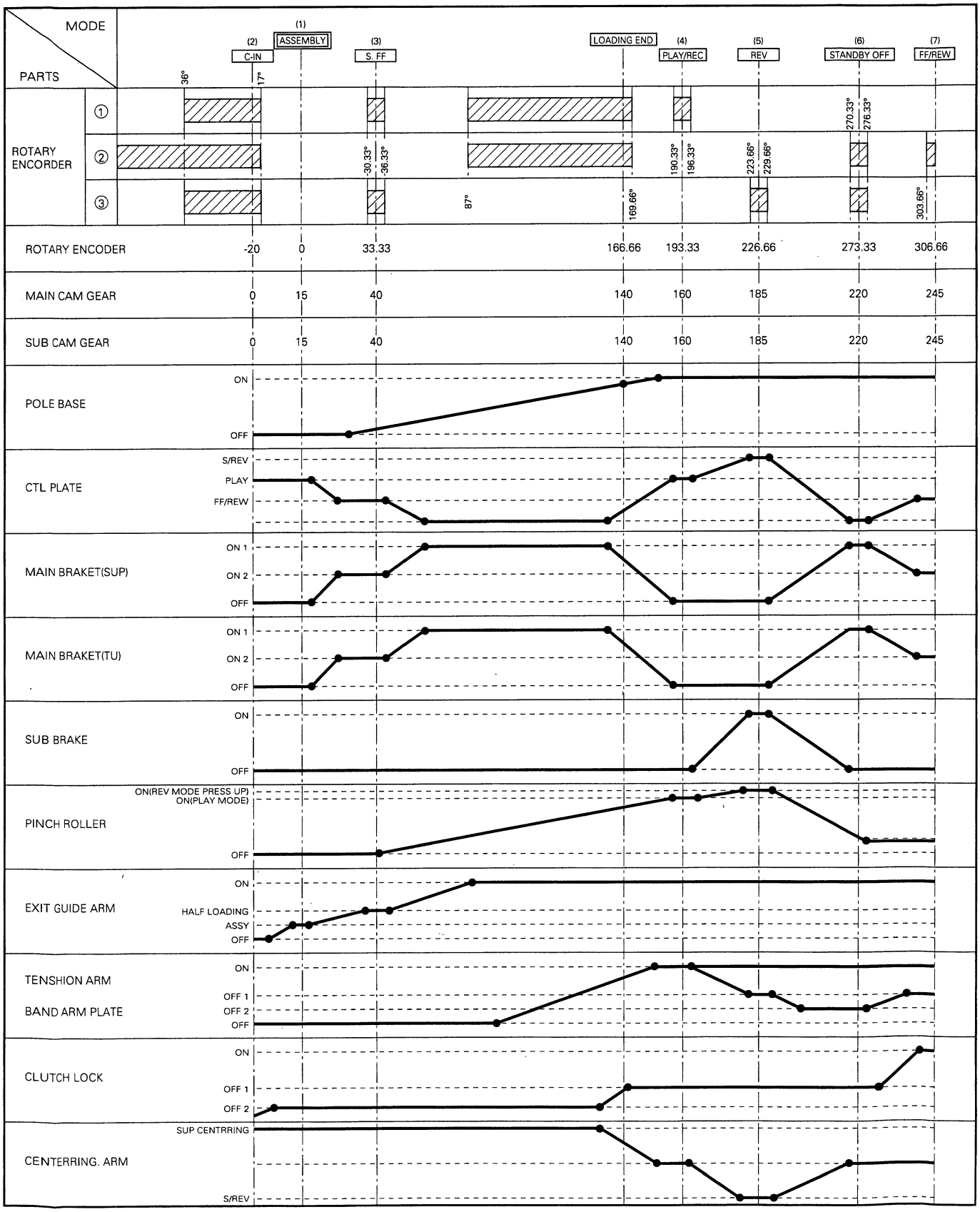

Table 9-3-1

9.4 EXPLANATION OF NEW FUNCTIONS

The new functions of the GY-DV500 camcorder are the SSF (Super Scene Finder) and DV terminal. The details of these functions are as described in the following sections.

9.4.1 SSF (Super Scene Finder)

(1) About SSF

The SSF function improves the efficiency of editing by recording the log data (see (3) "About log data" below) required for non-linear editing with the GY-DV500 camcorder in the beginning of each tape during recording. This function has been developed newly for use with professional DV.

(2) Features

The features of SSF are as described below. Thanks to these features, the software built into the camcorder performs all processing without the need of special tape or a processing board.

(a) During recording, stores the log data (for up to 6 cassettes) in the camcorder's EEPROM (Video/SYSCON IC407)

(b) After recording, writes the log data in the sub-code area on the beginning of the tape. As the log data cannot be written once the tape cassette has been ejected, the camera is provided with a memory space for up to 6 cassettes and can transfer log data to a non-linear editing system even after the tape recording has completed.

(c) When the camcorder receives a log data transfer request from the non-linear editing system, the camcorder reads the log data from the tape or EEPROM and transfers it to the non-linear editing system.

(d) The video and audio data according to the log data is also transferred to the non-linear editing system. As the log data of NG (No Good, or unsuccessful) scenes are not stored or transferred, it is easy to eliminate NG scenes later.

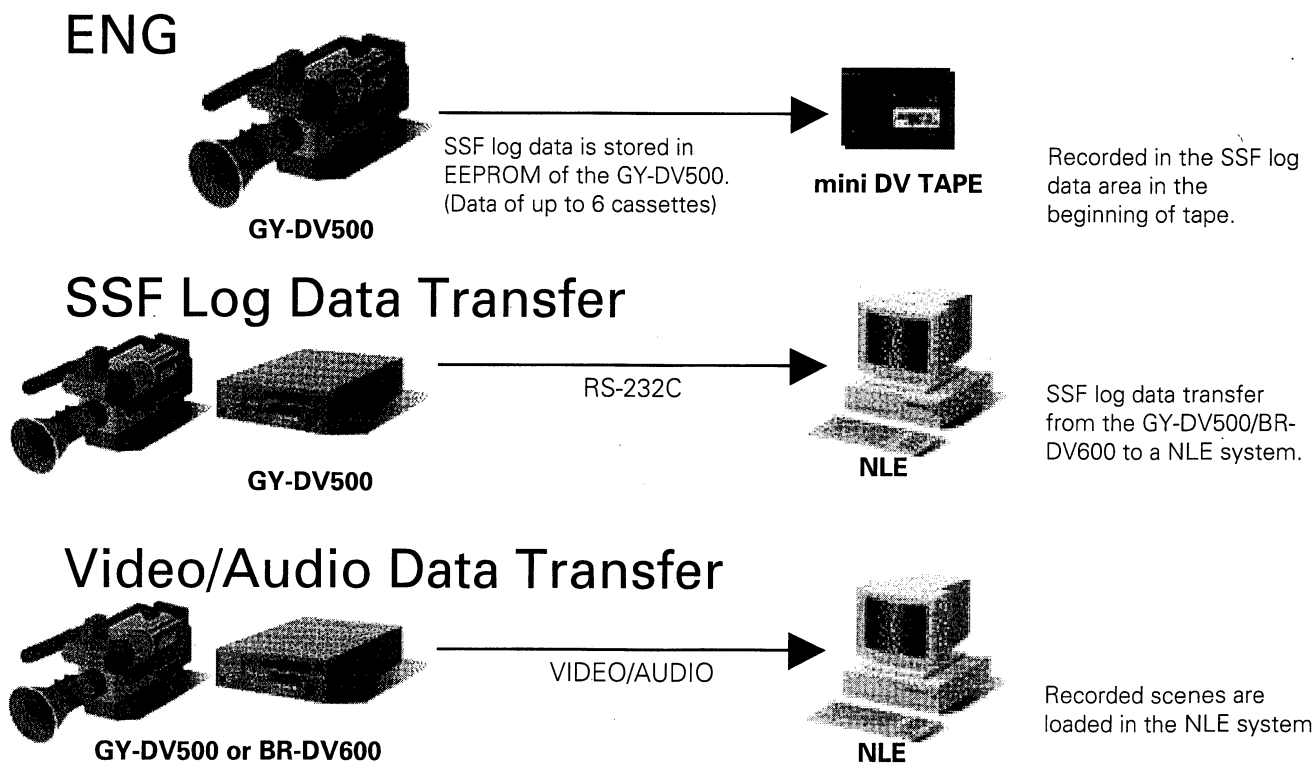

Fig. 9-4-1

(3) About log data

The SSF creates the following 5 items of log data during recording.

(a) Cassette number
(b) Scene number
(c) IN time code data (MI)
(d) OUT time code data (MO)
(e) CUE time code data (CUE).

Each of these data items is as described below.

(a) Cassette number

The cassette number is assigned automatically during recording, and the number is recorded continuously in the sub-code area of tape during recording. The cassette number begins with 1 and increments automatically with every cassette. The maximum count is 9999 and after this the number returns to 1. As the cassette number also includes the model discrimination ID code (S.S.F. ID : memorized on IC407(EEPROM) of VIDEO/SYSCON board.) of the recorder, overlapping with a cassette recorded with another GY-DV500 unit will hardly ever occur.

(b) Scene number

The scene number begins with 1 and increments automatically with every scene. The scene number of each scene is recorded in the sub-code area during recording of the scene. The maximum count is 119 and the subsequent scenes cannot be numbered (the VF shows "M: – – –" in this case).

(c) IN time code data

Indicates the time code of the start point of a scene.

(d) OUT time code data

Indicates the time code of the end point of a scene.

(e) CUE time code data

Indicates the time code of the point where the TAKE button is pressed during recording in CUE mode.

(4) MARK mode and CUE mode

The SSF has two operation modes of MARK and CUE. The log data is registered in either mode.

(a) MARK mode

Pressing the TAKE button on the camcorder body registers IN time code data, and pressing the button again registers OUT time code data. GY-DV500 can be registered 119 scene maxmum.

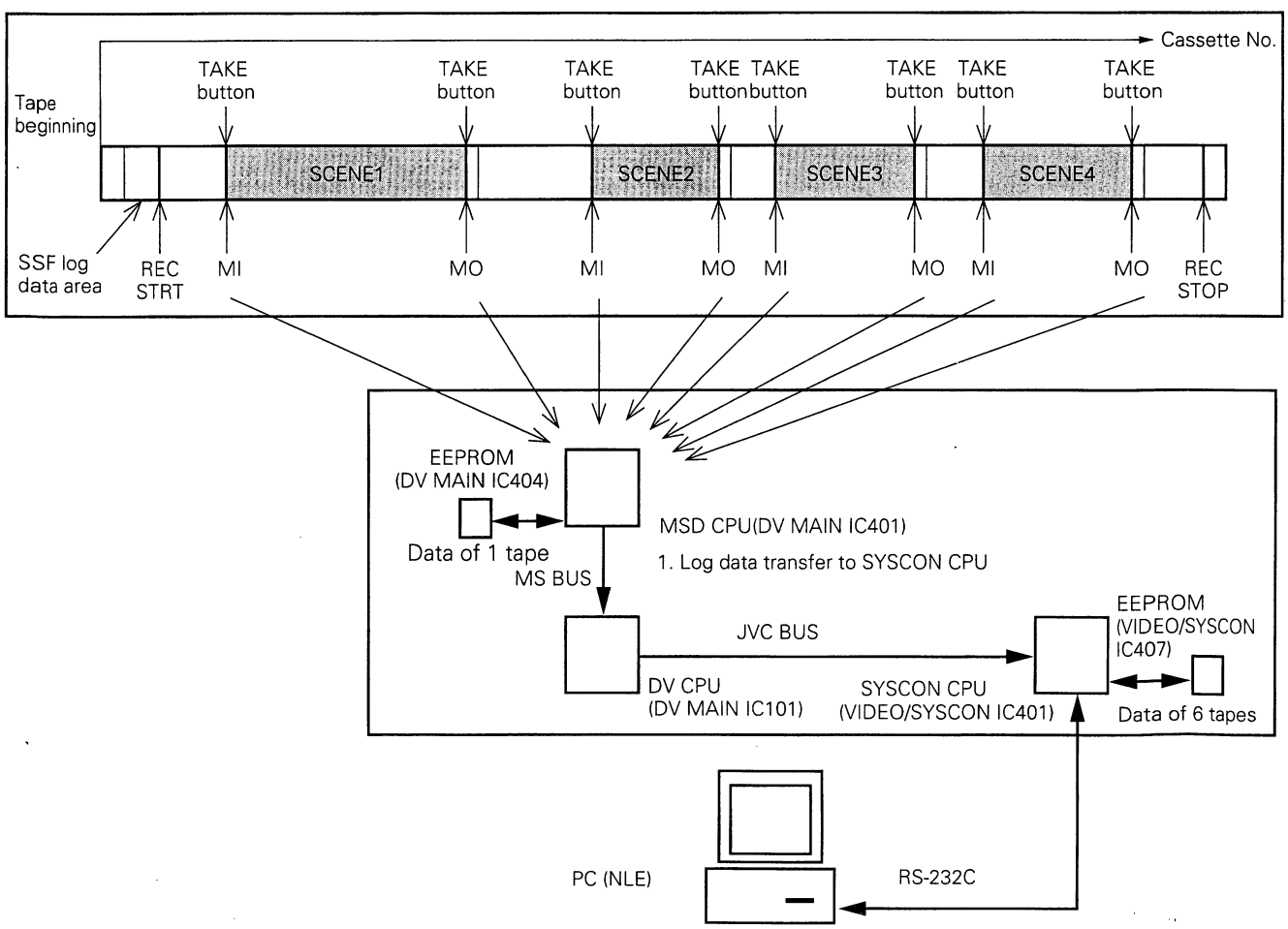

Fig. 9-4-2 Example of MARK Mode

(b) CUE mode

The IN time code data is registered at the same time as the start of recording, the OUT time code data is registered at the same time as the end, and the CUE time code data is registered every time the TAKE button is pressed during the recording. GY-DV500 can be registered 237 CUE point maxmum.

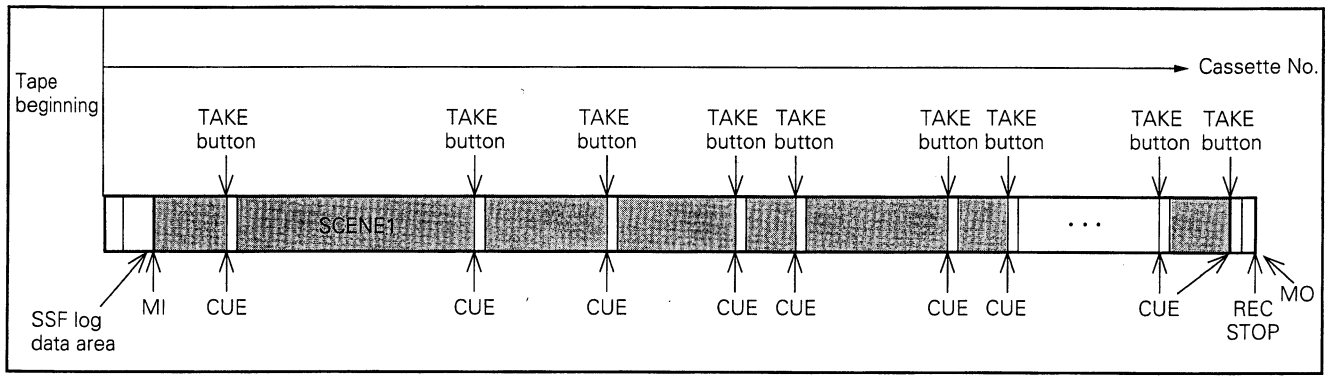

Fig. 9-4-3 Example of CUE Mode

(5) NG button and CONTINUE button

(a) NG button

The NG button is used to delete a registered scene or IN time code data from the log data as the NG (No Good, or unsuccessful) scene at the mark mode. Although the log data is deleted, the recorded video signal remains intact on tape. The log data of the scene registered by this operation overwrites the log data of the next scene. The next scene is renumbered by regarding a the NG scene as a scene without a number. Since the upper limit of the scene number is 119, the number of recordable scenes decreases if the NG button is pressed frequently. If the NG button is pressed to cancel all recording after registration of the OUT time code data, the log data of the last scene remains as the log data of an OK scene when the log data is written in the cassette.

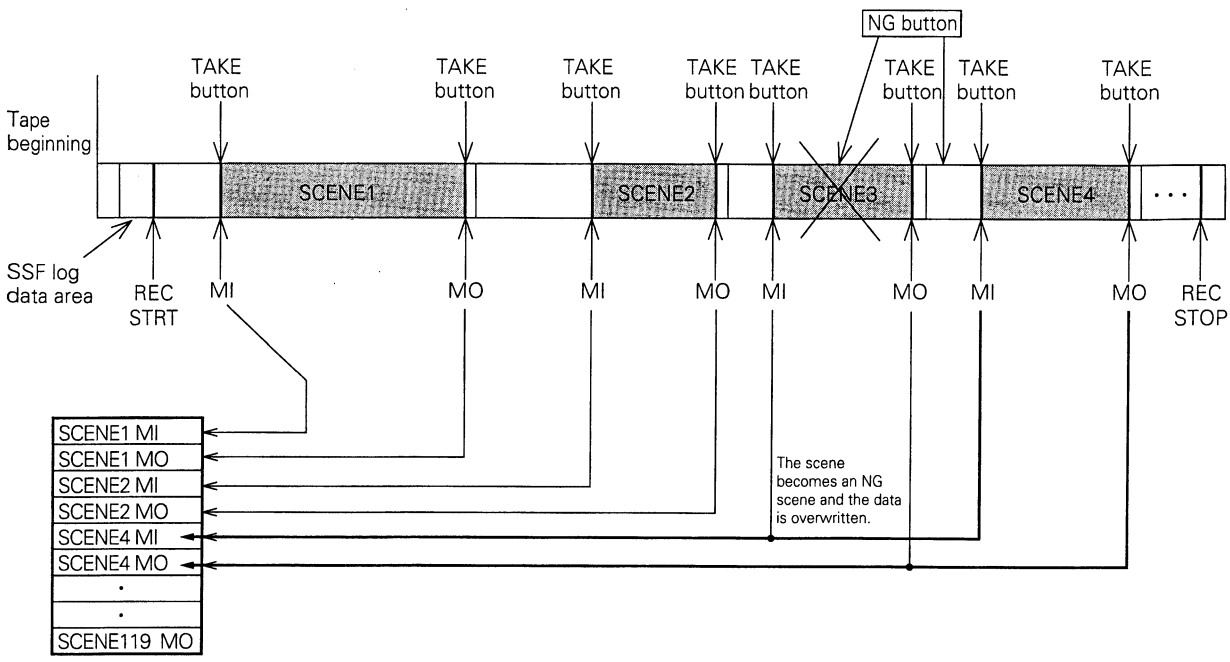

Fig. 9-4-4 Function of NG Button

(b) CONTINUE button

After interrupting recording in the middle to check the previously recorded scenes, pressing the LOG + CONTINUE buttons automatically searches the point after the last recorded scene so that subsequent recording can be started. (Scene end search function)

(6) Storage of Log Data

The camcorder can store the log data of up to 6 video cassettes. The registered log data is recorded in the SSF log data area in the beginning of each tape. However, if tape is rewound every time after recording to record the data, there is a possibility of missing important scenes during ENG, for example. It is to avoid this that the camcorder reserves the storage area for registered log data of up to 6 cassettes. The log data is recorded in EEPROM (DV MAIN IC404) in the VTR unit at the same time as in EEPROM (VIDEO/SYSCON IC407) in the GY-D500 camcorder body.

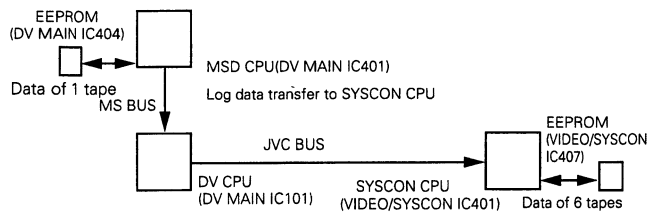

Fig. 9-4-5 Log Data Storage

(7) Recording of Log Data

Log data can be recorded in each cassette only with the method described below. Once the cassette has been ejected, it is no longer possible to write log data in it.

- Recording method

  To write log data in the cassette immediately after completion of recording, press the LOG + REW buttons simultaneously. If it is required to restart recording after the log data recording, press the LOG + CONTINUE buttons simultaneously in STOP mode; the recorder will automatically advance tape to the recording end point (OUT time code point) and stands by in REC PAUSE mode.

(8) Transfer of SSF log data

The SSF log data can be transferred to a non-linear editing system in the following methods.

(A) Required equipment

- Insert the cassette tape to the GY-DV500.
- GY-DV500 used in recording and cassette tape.
- Non-linear editor

(B) Transfer procedure

- GY-DV500 receives a SSF log data transfer request from the non-linear editor.
- In the GY-DV500, the cassette number of the SSF log data that is stored in the memory of the camera and the cassette number that is registered in the loaded cassette are compared. If they are found to match, the SSF log data is transferred to the non- linear editor.
- When the cassette number is not matched, display of the non-linear editer shows the "INVALID ERROR".

(9) Transfer of Video/Audio Data

The non-linear editor back-captures the video and audio data based on the log data transferred as described in (8) "Transfer of SSF Log Data". Three pieces of equipment are required for this operation, including the cassette used in recording, a non-linear editor and a VCR with SSF function (GY-DV500 or BY-DV600).

The non-linear editor captures the video and audio data by controlling the camcorder according to the SSF log data. At this time, the camcorder detects if the number of the cassette being loaded matches the cassette number indicated by the SSF log data, and transfers the data if they coincide and returns INVALID ERROR if they do not.

9.4.2 DV Terminal

(1) Outline

The DV terminal is a terminal capable of input and output of information including video, audio and data codes in digital form.

By connecting another digital video component equipped with a DV terminal to the camcorder using a DV cable, digital dubbing (in any direction) with little deterioration in video and audio quality is possible without A/D or D/A conversion between components.

When a PC equipped with a DV terminal (i. Link compliant) is connected directly through a DV cable, the video recorded with the camera can be loaded in the PC (provided that the circuitry and software of the PC are capable of handling the DV signal).

As the DV terminal can also send or receive camera control command data information, the camcorder operations such as start and stop can be remote controlled by connecting a piece of non-linear equipment and a camcorder or VCR equipped with a DV terminal. (However, in this case, the control software of the connected non-linear equipment should be IEEE1394 compliant.)

(2) About IEEE1394

This is an interface for the next generation of machines for use in high-speed data transfer between PC and ancillary equipment and was adopted officially as an IEEE standard in 1995.

It uses the serial transfer method and accepts up to 63 pieces of equipment. The transfer rates are as high as 100, 200 or 400 Mbps and suitable for transfer of moving images and audio data.

To transfer such data in priority, IEEE1394 is provided with the isochronous transfer function. It is therefore confidently expected to become a transfer standard for multimedia.

The connector types include the ordinary 6-pin type and a compact 4-pin type with which the power and GND lines are omitted. The DV camcorders usually use compact 4-pin type connectors.

(3) About DV Terminal

The "DV terminal" is the term used by the general public to indicate "IEEE1394-1995 Specifications and Their Extended Specifications (usually called IEEE1394)", which are high-speed serial interface specifications for connection between a PC and ancillary equipment or audio/visual equipment. Note that the IEEE1394 interface specifications themselves have not been designed exclusively for digital video interfacing.

The "DV terminal" is a connector in accordance with the i. Link (IEEE1394) Specifications but it is exclusively designed for use with DV equipment. (It uses a 4-pin connector and the transfer rate is 100 Mbps.)

"i. Link" is a registered trademark of Sony Corporation indicating IEEE1394-1995 and its extended use.

Therefore, the digital data exchanged through the interface called the DV terminal is the video data compressed according to the DV standard, and the data can be transferred between DV equipment or between DV equipment and a PC which runs software handling the DV signal (DV Non-Linear, etc.) and is equipped with a DV terminal. In other words, with a piece of equipment handling different formats of video data (a D-VHS machine, for example), it is not possible to monitor or dub video even if the equipment is equipped with a DV terminal.

(4) DV Terminal Used with This Unit

This unit is a camcorder incorporating a DV standard recorder. As a logical consequence, the data sent or received by it is the DV signal, compatible with DV standard VCRs such as the consumer-use DV Movie, and can be subjected to digital dubbing or editing/processing by a DV non-linear PC.

It is also possible to remote control the recorder operations of this unit from a PC or similar device running DV non-linear software.

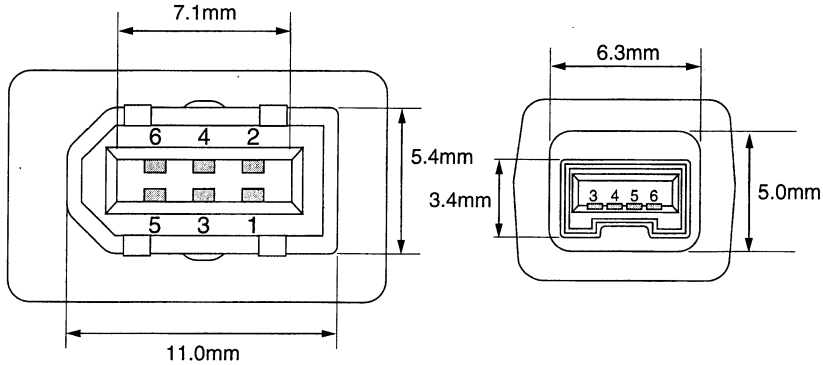

Fig. 9-4-6